The Elusive High Mileage Carburetor

Larry D. Wagner

What becomes of these fantastic devices and their inventors that we continue to hear about year after year?

Read of the personal experience of one of these inventors and of his three-year long struggle to produce one such device.

Also, read exactly what the inventor did to his test vehicles to double their mileage for a cost of around $100.00

Plans and illustrations are included

The Elusive High Mileage Carburetor

by

Larry D. Wagner

Copyright 1984 — Larry D. Wagner
Revised Edition of
The Elusive 100 M.P.G. Carburetor

Printed by Valley Press
207 West Stewart
Puyallup, Washington 98371
(206) 845-9549

*A NOTE FROM THE AUTHOR

You will find that within this book I express very strong views on automotive efficiency and energy and of the big business and big government that control them.

I thank God that I live in a country that is still free enough to allow me to state these views through the press. One thing that must be understood though, is that the information offered in this book is based on my personal opinion. The agencies I mention could well charge me with slander if I made an effort to convince you, the reader, that my opinion was absolute fact! So, I will stress again, this book is based on my opinions, no matter how harshly or bluntly stated.

You will consider this information and weigh it for yourself. I hope it helps you to form convictions regarding these issues that you can be comfortable with as true.

ALSO

This book contains information on several types of fuel systems that I have experimented with. Information is given to those who wish to duplicate our efforts with these systems. Though we found the most fantastic increases in our testing to come from the unit described in this book as the Complex System, we found that it is not a project for the amateur inventor. There are still factors to be solved in building it for consistant use. The system described as the Simple System has been built by thousands of citizens. Judging by the mail we've received, many of our readers have been delighted with increases in mileage of up to 250 percent.

Therefore, I advise you, if you are interested in your own experimentation in fuel saving devices, try the Simple System first.

Use caution in your work and Good Luck.

Larry D. Wagner
President/Carburetion Technology
Div. of Wagner Research & Development, Inc.
6316 - 128th Street East
P.O. Box 73067
Puyallup, Washington 98373

FORWARD

Much of the public has constantly heard stories from friends or relatives about someone in the next county or state who, in his garage, has built a carburetor that attained fantastic mileage, then was met with some unexpected fate. The bulk of the American public will choose to believe that such rumors are nonsense.

Unfortunately, the average American has the opinion that if it were possible to attain such an increase in gasoline mileage, then it would have been done long ago by the automotive industry. They have no reason to doubt this. After all, if they could produce a full-size car that could attain anywhere near 100 m.p.g., they would conserve fuel. Look how darn small the newer cars are.

And what about the United States government? Every week there's something new on the news programs about energy conservation.

No. Any idea that the automotive industry or the government is making an effort to cover up a fuel saving device is utterly ridiculous.

I can understand why the public feels this way. It is indeed what we have been shown by the government and who can doubt the complete honesty and integrity of our perfect government? Everyone knows that if they say that something is so, then it is so.

We are not everyone. We were at one time, but recent experience has permanently changed that. What we have seen has saddened and sickened us. We still believe that this country is the greatest in the world. Only, it is the people of this country that have made it great, not the international monopolies and owned politicians that effect it so greatly.

This book will show you the conclusions that we have come to face. We are not political fanatics. We do not jump fences or stage demonstrations out of overwhelming enthusiasm. We are tired and need the support of the public to attain our goals. In order to acquire your support, you

need to be enlightened to a reality that has not been visible to the public since its inception. Yes, bits and pieces surface around the country and turn into gossip. Here in this book you will see the whole picture and decide for yourself. With the information that you will gain, you would need to be an incurably closed-minded person not to provide us with your support.

Being closed-minded and sticking your head in the sand may temporarily block out unpleasant things; but as in Hitler Germany, this only allows matters to get dangerously out of control.

We hope that if this book does reach the public, it will inspire you to actively pursue the truth and do everything within your power and the power of your social organizations to overcome any injustice being done to us.

Copyright 1981 Larry D. Wagner Tacoma, Washington

Table of Contents

Chapter 1 9
In The Beginning
Chapter 2 13
A Little History
Chapter 3 23
Alternate Fuel?
Chapter 4 29
More About C.T.E.
Chapter 5 35
An Explanation Of Gas Vaporization
Chapter 6 43
C.T.E. Vaporizors
Chapter 7 49
The Second System
Chapter 8 59
Air Induction
Chapter 9 67
The Exhaust Gases And The Heat Exchanger
Chapter 10 71
The Primary Heat Exchanger Unit
Chapter 11 77
Water/Steam Injection
Chapter 12 81
The Simple System
Chapter 13 87
More Designing

Chapter 1
In The Beginning

I began my experience in the mechanical field at the age of eighteen as a jet engine mechanic in the United States Air Force.

While in the service, I re-designed the turbine section of the jet engine. The change was submitted to the Air Force through their suggestions program. After several months of evaluation, the suggestion was returned to me. I was told that the change was too major for the military to be able to implement on existing aircraft engines. They recommended that I submit it directly to the engine manufacturer for evaluation.

This I did. Unfortunately, the patent attorney that I selected to represent me took me too lightly. He assumed that due to my youth and lack of formal education, the idea could not have much merit. Due to his careless attitude and poor advice, I lost all rights to the manufacturing of this change. It is now being used in jet aircraft.

After my time in the service, I drifted around for a while from job to job, hoping to find a place of employment that might value intelligence over how much formal education one had. I finally ended up comfortably as a large marine thrust systems assembly and test mechanic. Some time later when the business came into some financial difficulty, I was layed off.

I am fortunate to possess the gift of creativity. I decided at this time to profit from it directly, rather than allow another company to benefit from it, or lose, as I did with the jet engine modification, to a large company.

I had been intrigued for some time with the concept of attaining higher gas mileage by converting gasoline into a pure vapor. If there was anything to it, I assumed that it shouldn't be a project too expensive to pursue myself. And God knows, there was a demand for it.

I spent several months researching the theory behind

vaporization. I found there to be a great deal of interest already existing on the topic. There were so many stories of vaporizers that had been proven so successful around the country that, according to the reports, attained as much as 150 miles to the gallon. This only helped to inspire me. I consulted with universities, chemists, and physicists for information. In the end, I found the theory to be extremely sound. Not only could higher gas mileage be obtained, but according to the theory involved, the engine should run cooler, last longer, and have a tremendously lower amount of toxic emissions.

Why was it then, that these units were not being utilized? It seems insane!

As much as this country needed this, and as much as the government was screaming for energy conservation and cleaner emissions, how could this technology be kept from the public.

At the time, I wasn't concerned. What I was concerned with was that I knew there was a great demand for it and I was going to make a fortune.

By this time, I was running low on personal funds. A personal friend of mine, Billy J. Seay, had enough faith in me to feel that I knew what I was doing, and offered to assist me. Soon after, we formed a partnership.

After a long and cold winter spent in my garage at a drafting table, I emerged with a set of blueprints. It wasn't until early that summer that we could find someone that was willing to spend their time and money to build a unit.

The test vehicle selected was a 1975, one-ton Ford pickup truck. The engine was a 351 cubic inch engine. We rigged a one-pint can under the hood for a fuel tank.

The director of the National Car Drivers' Association was among the witnesses on the rainy morning that we had selected for the test. The location of the test was just off the track at the Seattle International Raceway.

I was quite nervous. I almost wished that the test would be delayed. It is very stressful to stand, watching how months of work will function in an actual test. Most of the morning was spent making final adjustments and safety checks.

The vaporizer unit was designed to operate using waste engine heat. For this reason, the vehicle had to be started on

the conventional carburetor to obtain the desired engine heat. As the truck was warming, I climbed into the front seat with two of the machinists that assisted in building the unit. Two more were standing in the bed of the truck, peering over the cab into the engine compartment. I was holding temperature gages in my lap to monitor the temperature of the carburetor inlet and the heat exchanger core. One of the onlookers described the appearance of the vaporizer: "It looks like a chrome octopus attached to the engine."

It had already become apparent that morning that in the design, there was a problem with the exhaust gas restriction through the primary heat exchanger core. We could not attain the desired amount of heat for vaporization at idle. Once the engine was put to a load, the temperature would soar to the desired level. Because of this factor, I decided that if the test was to be conducted at this point, it would need to be made with the truck driving at least 45 miles an hour, therefore putting the engine under a load.

There was quite a bit of excitement. Aside from the observers in the truck, there were more following in the chase car. We placed a magnetic flashing yellow beacon on the roof and started off. Upon gaining about 45 MPH, the temperature of the primary heat exchanger attained the desired heat. The switch that directed the fuel flow from the carburetor to the vaporizer was thrown to the on position. Almost instantly there was a surge of power. This was because the vapor being introduced into the engine in addition to the fuel already passing through the fuel jets, a certain amount of gasoline was still in the carburetor bowl after the fuel flow was shut off. Once the bowl emptied, the engine gained r.p.m.'s and then slightly lost power. Then we steadied at 50 MPH. The engine was running so smoothly and quietly that if we were not still cruising at 50 MPH, we would have suspected the engine died. The engine was expected to run smoother however. Once the fuel is converted to a vapor, the density and distribution of the vapor is tremendously more even, therefore causing the engine to run much more smoothly. Using the one-pint gas can, we logged just a hair over 80 miles to the gallon. There was cheering and even shock. Although we had all seen it, we still doubted our success. We kept looking for some factor

that we had overlooked that gave us an inaccurate total. We were expecting something closer to 40 miles per gallon.

After some re-rigging, we managed to get the truck to idle on the vaporizer. While the rest of the mechanics were forward tinkering with the unit, I became curious. According to my calculations, the exhaust should be almost completely free of all carbon monoxide and hydro-carbon content if the fuel was being burned so completely. I went back to the exhaust pipe and sniffed. And sniffed again. It was like a blow dryer. I could not smell much of anything except a hot breeze. I knew that it was primarily composed of carbon dioxide, no more harmful than what we exhale from our lungs. Of course, with all the shock of the day, I doubted my own observation. I called the foreman back for his opinion. He bent down and sniffed, then raised himself excitedly, giggled, and seconded my opinion. Everyone had to observe and offer their opinions also. It was an amusing sight: all five of the mechanics were bent over with their backsides up in the air, sniffing the exhaust. Unanimously, we agreed that we couldn't smell any toxic gases. Again, feeling that this was too good to be true, we all doubted ourselves. Feeling that we just wanted to believe it so much, we much have just smelled what we wanted. So, we went to the next vehicle without a vaporizer, started the engine, and sniffed it's exhaust fumes. We choked. The intensity of it burned our eyes and throats.

We finally agreed that the exhaust was definitely cleaner on the test vehicle.

At this time, my partner and I were in seventh heaven. We could picture cars getting 80 m.p.g. coast to coast with the Wagner label on the vaporizers under the hoods.

Our success did bring us to our first realization. How could it be so easy? The only conclusion that we could come to was that there was a reason that these things weren't out for public use. Maybe, there was some validity to these rumors that we had been hearing about oppression. If it was true that these things had been snuffed out by the hundreds, how could we come to the opinion that we could succeed at something that no one else had succeeded in doing.

Before blindly jumping into an attempt to manufacture our device, we decided to step back and take a good look at

what we to had overcome.

In this analysis, we came into the following information. This is a basic history of gasoline vaporization and the political intervention as we understand it.

Consider that this is only our opinion, although it is based on the testimonies of oil company employees, college professors and graduates, inventors and their relatives, automotive industry employees, politicians, and in many public documentations that are available to the public. I am assuming that even if my opinion may not be a popular one with some governmental officials and large companies, I have the freedom to express it because this is the United States.

Chapter 2
A Little History

As it appears to me, at the turn of the century with the introduction of the petroleum burning internal combustion engine, a few speculators with insight acquired a position that with time would give them nearly the power of God. If they could have foreseen that within twenty years, nearly the entire country would become almost entirely dependent on their product: gasoline. They would have been insane to pass up the opportunity to gain a position of control.

In the United States Constitution, it is stated that monopolies shall not exist in this country. As long as the oil-producing companies were competing for sales of their fuel, prices could remain reasonable and the service of the selling agency would be an important factor in whether their product was sold.

It is not difficult to see that this has changed. Up to the early seventies, you could drive into a gas station, have your windshield cleaned, oil checked, and fill up for around four to six dollars. You would probably receive a free gift, green stamps, a decal, or some sort of advertisement for the station. Do you remember the independent gas station? "Joe's Service Station and Restaurant." Chances are, you could get the best buy in town there. Especially if "Earl's" across the street was trying to undersell Joe.

If I was one of the largest gasoline producers, I could see that as long as all of these independents existed, there would be no possibility of organizing the gasoline producers and getting a unanimous effort to boost the price of fuel. As long as these little "jerks" existed, gas prices would remain competitive. Not just the independent stations, but also their suppliers!

Now there is one simple bit of logic that has existed since the beginning of man. This is, whoever has the most power gets what he wants. In this country, money is power.

People can be bought. You see this on a local scale quite often. Quite often a community depends on a large factory for it's existence. You can be sure any decisions made by the mayor or city council will not be adverse to the factories' will. Right here in my home town, the sheriff was arrested for being an underworld leader. He was responsible for protecting prostitution and gambling, and was even charged with murder. We recently saw Watergate and the arrest of certain congressmen for accepting bribes from FBI men disguised as Arab sheiks. It is only logical to assume that the oil companies have more than a natural amount of clout in Washington, D.C.

It appears to me that in order for the major oil companies to be able to stage what we feel was a false energy shortage, there had to be inside help.

This supposed oil shortage caused most independent oil suppliers and gas stations to disappear. It was the government, from what I understand, that decided to allot oil to the largest consumers, or largest suppliers of gasoline, and the smaller guys were just out of luck. It all sounded logical and most of them gave up without a struggle. The end result: after the smoke cleared, the small guys were gone and the price of gasoline was nearly double, all in one swift move.

Where were the powers sitting after this? Several independent gasoline producers joined and merged into one, Exxon. That frightened many people. The appearance of a single, all powerful monopoly in the United States had been formed. Where did all of the small guys go? Only the few strongest and largest remained. Now there was this small group that controlled everything. If they were to have organized and unanimoulsy come to decisions on issues such as how much to raise the price of oil and what tactics to use, no one would be capable of interfering.

Have you noticed that the production of any possible alternate fuel has staggered or has been acquired by the oil companies? Finally, where has the concept of gasoline vaporization fit into the story?

The earliest patent that I have seen for a gasoline vaporizer was dated as early as 1889.

The concept and the knowledge of it's benefits are not new. Again, in the beginning of our dependence on fossil

fuels at the turn of the century, especially when the oil business was so competitive, it would have been disastrous for a device to be introduced that would create such a sizable increase in gas mileage. Gas was sold for so little that to increase gas mileage by eight to ten times would have broken the industry.

There was very little public understanding of the internal combustion engine at that time so it seemed to be quite a majestic creation. People could seldom understand it's theory, much less doubt it or improve it. The innovations that could have brought us this increase in mileage were generally confined to the auto manufacturers. At the time, I would assume that their attitude was to let well enough alone. Why introduce this when the oil companies were charging so little for fuel in the first place. They could see that a sizeable increase in mileage would wipe this industry out. What they probably did not realize was that they were protecting a harmless pup that would soon grow into a strong and merciless wolf who would soon have them at their command. Not a large majority of the public is aware that the controlling interests in both the oil and automotive industries in this country are now held in New York by the same financial organizations, or holding companies. Now they are one and the same and there is no chance of one hurting the other. Talk about a monopoly!

In earlier days, once in a great while, someone out of the population would produce a gasoline vaporizer. Most, according to reports, were bought for as little as $12,000. There are also the reports of inventors suddenly disappearing without a trace of their invention to be found. One of these inventors that surfaced in the late 1920's and early 1930's was an individual that many of you have heard of before. Charles Nelson Pouge, who emerged from Canada, got up to 200 miles to the gallon from a V-8 engine. The world was delighted. I still don't know how he got that far without meeting with some type of oppression. Once he surfaced and became an international hero, they could not do very much to stop him. His disappearance would cause rage. It was already suspected by the public that this device would not be very welcome by the oil industries. Pouge was, according to history, quite successful in his testing. What happened to Pouge in the following years is quite cloudy.

No one seems to positively know what did happen during this period of his life.

Based on reports that we have gathered from people who claim to have been witnesses to different happenings, we pieced together the following story.

At the beginning of the Second World War, it was rumored that the United States Army acquired Pouge for a period of six months. During the war, in the North African desert, our American tanks had to travel great distances while burning tremendous amounts of fuel. This, as I understand, caused severe problems. Fuel was already very scarce. What I heard happened next came from the mouth of a tank mechanic. I was told that as soon as the tanks were delivered to their assigned post or command, they were secretly taken aside and altered. The carburetors were encased in a box. After the installation of this "box", the tanks reportedly attained a tremendously higher range on the same amount of fuel.

Well, this was one unproven report. It interested me, but there would be no way to support this claim unless one of the units was obtained and it could be proven that it was used on these tanks. Nearly a year later, I was speaking to a group at a lecture and mentioned this story. One of the members of the group raised his hand to interrupt me. He said, "Excuse me, . . . but I was a tank driver in the North African desert at that time, and I can confirm that." He told me a story similar to the first one related by the mechanic. When stories from around the country come up consistent, then either the same story teller started all the stories or they may indeed be true. To top off my surprise, my partner, who is a bit more of a historian than I, told me that in Rommel's papers at the end of the war, he made the statement, "We would not have lost the North African campaign if it had not been for the introduction of the *American Long Range Tank*!" American Long Range Tank? How were our tanks getting farther on the fuel they used that the Germans' tanks?

All of these reports point to one conclusion. It must have been that Pouge gave his knowledge of high mileage carburetion to the United States Army and they used it in times of need during the war.

At one of my latest lectures, another man near Portland told me that he was a military driver in Europe during the war. He claimed that the cars were getting fifty miles to the gallon. If you inquire around or consult your library, you will be amazed at the information that you could gather to support these reports. I have seen advanced Pouge carburetors. If you go through the Patent Office, you will attain the old dinosaur patents. Pouge's first patents were functional to a degree. They were large, expensive to manufacture, and were very difficult to regulate. Pouge developed many more advanced units that are hard to find. Why? As a matter of fact, none of the patents or information available to the general public seem to be extremely credible. There could be a good reason for this. If all of the information was taken from the public on Pouge's and other inventors' works, the public would be outraged and become uncontrollable.

If only the poor or difficult patents are made available, and the public tries to use them, they would soon become discouraged and feel that there is no credibility to the concept of gasoline vaporization after all.

Pouge apparently kept working but dropped out of public view. Many people throughout the United States and Canada still possess Pouge carburetors. Mr. Pouge is still living, somewhere in a Canadian rest home from what I understand. The last word that I heard of him was when a reporter recently went to interview him. One of his statements, as I understand it, was "they could never get as much gasoline mileage now as I got in my day; they have lowered the quality of gasoline so much now, that when you vaporize it, it turns to gum."

With Pouge's carburetors, that statement could be quite true. However, we have developed vaporizers that are not affected by this lower quality of gasoline.

I feel that out of respect and appreciation, someone should write a book or movie of Pouge's life and struggles.

Then there was the Flex movement. I have talked with dozens of people who were directly involved in the Flex movement. From what I understand, this carburetor was invented around 1960. I have heard reports of 96 miles to the gallon on some tests. It would seem that the state and federal agencies would have given a great deal of support

for such a needed product. Did they? Not from what I understand. As a matter of fact, the California state government did everything within their power to discredit the movement. The meetings held by those concerned with the Flex carburetor would be raided with court orders restricting them from talking. Finally, the effort was defeated.

The inventor, from our reports, went into hiding for ten years. These are only a few of the reports that we have heard. The Flex effort could well be a book in itself. If there is any credibility at all to these reports, then we know for a fact that we cannot call on our fine government for support.

Have you heard of Tom Ogle? At 19 years of age, this young inventor began tinkering with lawn mowers and gas vapor. By the time that he reached 24 years of age, while employed at an auto parts store, he managed to attain over 140 miles to the gallon on a 1966 Thunderbird. By then, he had attracted the attention of some of the local news media. Upon hearing of Ogle, the University of Texas challenged Ogle to a test. As national publications state, the car was thoroughly checked for hidden fuel tanks and exactly two gallons of gasoline were metered into the gas tank. With a convoy of news media and automotive engineers trailing, they set off for New Mexico. Ogle completed a 200-mile round trip, stopping only to let the observer's cars refuel. After a long and tiring battle to market the device that had been authenticated by the University of Texas, Ogle wound up dead at the age of 26. Will Ogle's death have been in vain? His death was said to have been suicide by drug overdose. It does not appear that anyone can prove otherwise. What a dishonorable way to die. If people believe that his death was of his own doing, he is even stripped of his gallant heroism. There are quite a few reporters that swore that if Ogle wound up dead, like so many reports of other vaporizer inventors, they would avenge his death by exposing the guilty party. Unfortunately, in my opinion, the guilty party considered this possible retaliation well. If Ogle had died from a heart attack at 26, been accidentally killed in an auto accident or shooting, there would have been a rage that swept the country. But with a suicidal overdose, which would disgust most people, there was not any hostility or greatly suspicious reactions.

If I die of an accidental drug overdose, you will have cause for suspicion. I don't even take aspirin when I need them. I don't like mind- or body-altering drugs, and I can feel the sluggish affects of aspirin. I am a careful driver and have never even broken a limb, so, an accidental death or suicide is greatly unlikely. I have always enjoyed life, even at it's worse.

Does death sound outrageously far out to you? Many people are of the attitude that the whole concept of Detroit or Washington, D.C., being against fuel-saving devices is totally outlandish. In the time that we have been involved in this pursuit, we have heard reports from dozens of people right here in the state of Washington of acts of violence or even death. Bombings of experimental vehicles and shops are quite common. In some cases, these individuals claim that their children have been threatened.

Let us back off and analyze this situation in simple terms. According to information available to the public, there are and have been devices that can sizeably increase gasoline mileage. If it does exist, why hasn't this been made available to us?

Who is responsible? The most popular villian accused is the oil company, automotive industry, the international bankers that control them, or the federal governments that are heavily in need of oil.

Why? It is suspected that the financial organizations that control both do not desire to lose control of the exculsive power they possess over the volume and price of oil to be sold.

If this is so, then why doesn't the government do something to stop it? It appears that they do not have the power. It seems they are afraid to change things that dramatically. This is not to mention the possibility that some or all of the government officials that influence the freedom of fuel-saving technology may be paid off.

What would explain the fierce and destructive attitude with which the government seems to greet these new ideas with the same attitude as a mother lion protecting her cubs.

The overall answer to this problem is not so much for us to conserve gasoline as Uncle Sam has advised. We should find an alternate fuel. How free is this avenue?

Chapter 3
Alternate Fuel?

What you read in the papers about the efforts made by the government and the oil companies to conserve fuel, I consider to be no less than propaganda.

The Russians are quite loyal to their country. They will even die for it in time of war. Why? According to what we learn in school, it is a horrible place! I agree that it is, but the point that I am making is that they don't think so. The reason for this is the propaganda that their people are fed daily. They feel that the United States would be a horrible place to live and is a threat to their comfort. Just about every country in the world is able to keep their population loyal through propaganda.

Why is it that our population doesn't feel that they are subject to the same?

Do not get me wrong. I am quite proud of my country and feel that it is superior to any throughout the rest of the world. As a matter of fact, I am willing to die for it. At least, for the people in it and the constitution that it was founded upon. I just hope that it isn't the corrupt part of this modern government that does me in. I would like to see the purity of this country stand as it did, with no changes with the exception of a strong defense against any type of monopoly, especially monopolies on necessities. If the food supply was all under the control of one large and powerful organization, the same thing could happen all over again.

Well, I am making some awfully noble and profound statements. All we have to do is find an alternate fuel. Is it all that simple? You would be surprised. Although daily we see that the government has sponsored some solar or other project on alternate fuels, hundreds of true solutions are passed over. I can name a few.

Nuclear power, geo-thermal energy, hydrogen, and super efficient solar energy. Explaining one of these at a time, did

I say, nuclear? Why everyone knows that nuclear power is already being used. Unfortunately. I bet you have heard just how dangerous nuclear power is to our familes and environment. We'll all be mutes!

Propaganda! Open-mindedly compare the safety of nuclear power to fossil fuel. If you can get all of the facts, you will realize that hydro-carbon fuel, when combusted, generates gross amounts of carbon dioxide. It is a fact, according to an NCDA professor. The amount of carbon dioxide currently being introduced into our atmosphere is dangerously high. It is creating a hazard by breaking down our protective insulation of the atmosphere. A higher amount of carbon dioxide in the atmosphere would radiate valuable heat into outer space, causing us to eventually go into another ice age. Does this sound far-fetched? It is there in black and white, and quite true. If this threat isn't enough, think of the amount of carbon monoxide and other toxic gases that are being pumped into our atmosphere by hydro-carbon-burning electrical generating plants. Now, how does nuclear energy look. The radicals point out the potential danger of nuclear power. Look at the actual damage created daily to the alternative. People are easily excited to support an issue. The propaganda experts seem to have reduced the threat of phasing out fossil fuel electrical generation and going to an alternate, clean source of energy. This was accomplished by using the people of the country themselves.

I am not claiming that nuclear power is completely safe. I do consider it to be far less of a threat than the daily use of such fantastic amounts of hydro-carbon fuel.

The main point that my argument boils down to is this: A nuclear power plant can produce electricity almost indefinitely. Once the expense of the initial construction is paid, the only real expense of operation would be the employee's salary and, once in a great while, the replacement of the core material.

In an oil-powered generation plant, once the initial construction has been paid for, gross amounts of oil are required, forever. The expense is never-ending, along with oil company profits.

It is my opinion that the nuclear power plants are, and always have been, a threat to the oil industry. There is no

way that they can monopolize the nuclear industry to recapture their lost revenue. It is also my opinion that these oil companies have been responsible for all of the negative propaganda that has come out against nuclear power plants. Professional propaganda psychologists would know just how to incite riots and how to excite the people against the entire industry. If the defenders of the power plants had ethics that low, I am sure that they could incite demonstrations against the oil-fueled plants. The damage is being done here and now to our atmosphere and environment by fossil fuels. Anything would be a more practical alternative. The nuclear power plants do present a potential danger, but very seldom actually do any damage. Compare the decay of the atmosphere to the nuclear damage.

If water is heated by the sun, it will absorb that heat and then can be used to heat a home or the home's water supply. This is fine, but it could be used more practically to produce the home's electrical supply. The process is not that complicated and could probably be constructed by the average home handyman.

If freon or ammonia (both refrigerants) are heated, they will expand to a pressurized gas. If freon is exposed to about 200 degrees of heat, available from a solar collector, it will expand to a pressure of an amazing 1,500 to 2,000 pounds per square inch. Imagine the power that could be yielded for use in a piston, steam-type engine, or a turbine for electrical generation!

Remember, this is not just abstract theory, it has been done and is currently being used. For a relatively small cost, you can disconnect your electrical cables and become self-sufficient. The solar energy would not be practical year-round, but, for the winter months, the ground heat would fill the void.

You have the power to do something about this. The American people have shown a great amount of ingenuity in times of need. Things have been awfully easy lately and the increase in food and fuel prices has been slow enough not to create panic.

In a recent news release concerned with the OPEC countries' decision to raise the price of oil once again, Saudi Arabia made the statement, "We cannot raise the price of

oil. If we do, they will come up with alternate means!" They know that we can.

Finally, I mentioned the use of hydrogen as a fuel. This is the avenue I hope to pursue. Hydrogen, as you know, is made from water. I made it in my science class in high school. Simply pass an electrical current through water that is slightly saturated with a conductor, sulphuric acid is popularly used. At one electrode, the one part oxygen is produced and on the other electrode, two parts hydrogen.

Hydrogen is a very explosive gas. One of the nice things about using hydrogen as a fuel is that once it is burned, rather than emit an exhaust of carbon monoxide or hydrocarbons, it yields pure water and nothing else. The water can be processed back into hydrogen once more. Or, if you are thirsty, you can stop and drink some of your exhaust gases.

Everyone could have a hydrogen generator in their garage someday which they can carry home, plug into the wall and hook up to the garden hose. In the morning you could throw the hydrogen bottles into the trunk and use them as you need them. Hydrogen is explosive, but there are ways in existence that provide absolutely safe storage and containment of the gas. Metal Hydrides are one example being utilized by the Billings Energy Corporation in Salt lake City, Utah.

Geo-thermal energy is an alternative that we should have been taking advantage of a long time ago. This medium of energy use is enough to make the most fanatical defender of the oil companies doubt them.

When you think of geo-thermal energy you probably envision a site above some volcanic activity in the desert. Most people, according to what they have been told, believe that at least 300 degrees of heat is required to power a geothermal power plant. Would you believe that there is enough heat in your backyard to produce all your electrical needs? It is true. As a matter of fact, this is not just abstract theory. It has and is being used now.

A professor in thermal dynamics, who has been a consultant to us and the National Car Drivers' Association; has developed a home heating system that for twenty years has been heating homes for a cost of about $140 a year. Professor Schlicktig has also designed a geo-thermal power

plant. Also, other scientists associated with geo-thermal energy have built generating plants that can power homes and businesses simply by using a combination of ground heat, and sometimes super-efficient solar energy. The Stewart story is an example of this. Stewart had a geo-thermal plant which powered his fairly large research facility in Spokane, Washington. When he tried to market his invention, the federal government began to attack him, apparently trying to stop him in his efforts.

Projections made on this topic indicate that a geo-thermal power plant would cost tremendously less to construct than a nuclear plant and would be far safer.

Imagine. For a small proportionate expense, you can install a power plant in your backyard that will power your house year round for nothing. Again, this technology is not new and has existed for nearly a generation. In Stewart's case, it was Uncle Sam that stood in his way. How many other cases have occured with similar response I do not know.

I also mentioned *super-efficient solar energy*. Solar energy has been used for quite some time, but in very impractical ways. It has either been used to heat water or converted into electricity by solar cells. The efficient utilization of geo-thermal energy or solar heat is defined scientifically as *low grade* energy. The energy obtained may not be as intense, but is by no means an impractical source of energy.

If you have any doubts or questions about any of the mediums of energy programs I have discussed, you can contact the National Car Drivers' Association, a non-profit organization, with which we have worked closely as of late and for which we have a tremendous amount of respect. This organization has reputable authorities who can provide documentation to support the theory and history of such companies. They are actively working to unite the energy rebels around the country and to put an end to energy problems. The director of the NCDA has been constantly pursuing more efficient or alternate energy saving devices for over twenty years. The files of the NCDA contain documentation that supports many of my beliefs expressed in this book with fact.

I feel that the NCDA is a medium for the concerned people

of the country to unite and gain strength in the struggle to get out from under the power of the complete monopoly that seems to exist.

There are many other organizations pushing for the same goal as we are at Carburetion Technology Enterprises. The NCDA can give you information on who and where they are.

The overall picture reflects that all types of energy saving technology in the country and world have been stifled by governmental agencies and oil powers of the world.

We have had people and organizations by the dozens offer to finance our product. Many had quite a fortune they were willing to invest, but we also talked with many who have lost their fortunes to a gasoline vaporizer or similar device. We are patiently waiting for the right one.

Chapter 4
More About C.T.E.

To continue with our history of Carburetion Technology Enterprises from the point where we had to consider just what we were up against in our struggle to market our device, you can see that the information indicated on the previous pages was quite discouraging.

At this point, we had a proven product. But, if we jumped into manufacturing, we would surely face the same fate as the others.

I was not a politician or promoter; but with the drive and creativity of myself and my partner, Billy, I was determined to find a way to market the device.

It was apparent that direct manufacturing and marketing was not the answer. If we tried, we would either come under fire from the government or be subject to direct violence. We decided that if we could somehow obtain the public's support, as Flex did, we would stand a chance. How were we going to prove to the public that this thing really worked? One obvious answer was to appeal to the news media.

This was not quite enough. The people could see the newscast, but they only had our word that the thing worked, and of course, there are plenty of skeptics. The solution on which we decided was to distribute a set of plans with an explanation of how and why the unit worked. With this, people could build the unit themselves and prove to themselves that it works. Seeing is believing. We began distributing the plans through public sale. The problem that we ran across was that people would gladly obtain a set of plans but that is as far as they would go. Very few people would complete a system because they found it to be too much work.

We stopped the sale of the plans for six months. In this period of time, among other things, we worked on making

the system simpler to build. We came up with what we called the simple system. The results were not quiet as impressive as 80 MPG, but, in many cases, it would double the mileage on cars.

We found that the way many inventors were stopped from marketing their device was by making claims of the mileage that could be obtained with their unit.

When an inventor would obtain a 200 percent increase, he would modestly claim for safety's sake that the unit would obtain a 50 to 100 percent increase. From the stories I have heard, the California state agencies would produce a car that was an exception and say, here, double the mileage on this or you are in violation of state advertising laws. Invariably, the inventor would lose his case and be out of business.

In order to protect ourselves from being attacked by an agency that we feel might be out to put us out of business, we do not make claims. We did in the beginning, but fortunately we realized in time. Now we do not claim as a fact that we can attain a one-mile to the gallon increase. We can say that we have tested our unit on several vehicles and according to *our* test results, attained a 100 percent increase. Many people who have built our system have called or written us with similar testimonies. By my standards, the people who drive to and from work every day in actual driving conditions are a much more reliable source of proof than the "State Approved Testing Facilities."

The simple system was a smash. At the same time I introduced it, another inventor introdued one that was similar. Between the both of us, we saturated the Tacoma-Seattle area with these systems. Everywhere people were talking about their gas savers. Auto parts stores began to carry the kits. All around town these auto parts stores were giving reports of people getting 50 percent, and in some cases, an 800 percent increase in mileage. At the weekend flea markets, parts for the systems were being sold. It was great! The Tacoma residents were believers.

There were still many people that had attained the plans that were still having difficulty increasing their mileage. Most had overlooked something in constructing the unit. It appeared that the type of vehicle on which the unit was installed made a difference in the increases obtained.

I decided that I could explain the system to the people better if I could speak to them personally. The solution was to conduct lectures or seminars. I contacted the director of the NCDA and asked him to honor the seminar with an appearance. He gladly accepted and offered to give a small speech on the oppression and who was responsible. I also invited this other inventor who had been in the limelight. He had recently been in many newspaper stories and had stirred quite a bit of enthusiasm. We charged a $35 admission fee, which we all agreed was reasonable, offered the other inventor's and my plans on the two different systems. The director of the NCDA offered to include a book on energy conservation and oppression, published by the NCDA, entitled *Energy Crisis Answers*.

The public response was overwhelming. Almost all the television, radio, and newspaper media covered the story. It was very encouraging to have the public express their appreciation and admiration directly for what we were doing. We knew that we were on the right road. After a few joint seminars, our trio separated. We at CTE continued on, still distributing information provided by the NCDA. We traveled for months from town to town, always getting a great response from the news media. Meanwhile back in Tacoma, the work continued on refining the unit to perfection and reducing it in size. The complex system at that time remained the equivalent of one of Pouge's first designs. It required much work to construct and was difficult to adjust. It was also vulnerable to weather changes as far as the performance was concerned.

The simple system became quite popular. We received good reports from the students of our lectures on their results. A great advantage to the seminars was that the students could exchange names and share their skills and tools in constructing their units.

In the months that we were on the road, we met many other inventors who showed us their systems; some were quite unique. Others were copies of the Pouge or Flex, or some other popular invention. Many attained amazing increases in their mileage using these homemade devices.

We also met quite a few investors who, after seeing the devices tested and proven, had invested their fortunes to market the devices. Always the story ending was a sad one.

Most of the investors reported that the government had placed too harsh demands on the testing requirements. The tests would have cost hundreds of thousands of dollars. If they got past that, there was always another obstacle.

We could have taken this as discouragement, but instead we built on it. We observed the methods by which the others had been defeated and this enlightenment allowed us not to make the same mistakes.

We felt that our time on the road had been fruitful. We managed to enlighten the people of every city in the state. They now knew who we were and what we were doing. We acquired much support. If anything negative were to confront us now, we would have a large group of people who had proven the existance of a high mileage carburetor. Before there may have been rumors of their existance, but now there was proof.

Now that this work was done, we needed to decide what to do to continue this effort. It is obvious that manufacturing would be the route to go. There would be a fortune to be made. With these funds, we could pursue our concept of a hydrogen or freon engine.

Most of the knowledgeable investment groups who have had experience with the bureaucracy in this pursuit, feel that an attempt to market in the United States would be futile. I am sorry to agree. I, being a proud American, would like nothing better than to see the unit produced here. It does seem that we would have a much greater success in a foreign country. We have been discussing Italy or South America.

We now have a product that exceeds the complex system. I would describe it as a portable, under-the-hood cat cracker. It alters the gasoline to a vapor or gas state.

I have an optimistic philosophy. There could be a good and fair reason for the government's stand, if they are indeed oppressing fuel saving technology as it appears. It could be to simply offset the severe economic change that would occur should this device be introduced overnight. Imagine people pouring into vaporizer service centers to install these units. Not everyone could afford one to start. The oil companies would need to multiply the price of gas many times to offset the loss of profit. What about those who either could not afford a unit or were not able to get one?

They would have to pay up to ten dollars a gallon for gas.

It does seem as the years go by that the mileage on cars is slowly climbing as the prices of gas increase. If the only way that we are offered to increase our mileage is to buy a small car, then slowly people will buy small cars. If a full-sized car was introduced that increased mileage, people would want to know how it does, and once they discovered the reason, overnight, everyone would have the device responsible.

This would create an economic shock. The cars may be getting smaller, year by year, but the mileage of these cars is climbing. A Chevette, the same approximate weight of a Volkswagon bug, can attain 50 or more m.p.g.

I feel that they could possibly have an ongoing plan that will ease gas prices up to ten dollars to the gallon about the same time that we are getting 100 miles to the gallon. This could possibly happen in 10 to 50 years.

Still, we are bound to the oil companies. This may be the most merciful view that the oil companies will get for their activities.

I would still like to change over to a fuel that anyone can produce. Hopefully, whatever fuel that may be, we will not become monopolized and the freedom of competition can again exist.

For the time being, the cars that we depend on are what we now work with. Changing the engine to burn another fuel or replacing the engine with another is not economically feasible. What we must do is develop a device that can be cheaply installed to save gas. These are in existence. If we use them though, the oil companies will compensate their losses almost immediately by raising fuel prices again. We can buy time and weaken the oil companies by using these vaporizers. The oil companies can raise prices to compensate, but they will have to come forth and expose their greedy intentions to the public to do so.

Did you notice that the price of everything skyrocketed when the oil companies went crazy? If we can remove their power, maybe we can get some stability back into our economy.

Chapter 5
An Explanation Of Gas Vaporization

As I stated earlier, gasoline vaporization is not a new concept. I think we all, to some extent, suspect that gasoline vaporiation is much more practical than conventional means of carburetion.

If you have ever heard a story of a mechanic attempting to weld a damaged gas tank without clearing it of vapors, chances are the guilty mechanic was not the person telling you the story.

Any fuel needs a supply of oxygen to support burning. If you tried to ignite a pool of gasoline in a complete vacuum, you would not have very much luck. It would not be possible to ignite it. If you submerged a spark plug in a pool of gasoline and applied enough current to it to generate a spark, there would be no combustion as a result. Unless the gasoline is exposed to air or oxygen, it will not ignite.

Consider these four ways of supporting the combustion of gasoline. Only the manner in which it is exposed to the air supply varies.

First, envision a cup of gasoline being set on the ground. You can throw a match into it without much success. You must take the time to hold the match close to the surface of the gasoline to ignite it. Now, you have an orange, flickering flame. You can sit back and relax. It will continue to burn in this manner for about an hour.

Second, pour the content of the cup of gasoline onto the ground and toss a match into the pool. You better give it some room. The flames will be somewhat fierce. The burning will not last as long as when in a cup, but it will be considerably more violent. Why? Quite simply, it is due to the fact that more of the gasoline is exposed to the supply of air.

Third, place the cup of gasoline in a paint sprayer and spray it into the air. Ignite the mist and the cupful will burn

with much greater intensity than the cup spilled on the ground. It will take even less time to burn, but again, the intensity of combustion was far greater. Why? The rate of burn has changed. The amount of BTU's of heat given off in each case were identical. Only the burning is speeded up, the intensity of the burn increased because more of the fuel was exposed to air.

So apparently, the quicker the fuel is burned, the more energy it seems to possess. The rate of burn can be easily altered by changing the amount of air that the fuel is exposed to. This is why an internal combustion engine is as efficient as it is. The fuel mixture is compressed to about seven atmospheres of pressure, therefore, multiplying the density of the oxygen that the fuel is exposed to by seven times. This means that the fuel will burn seven times more violently than it would have at atmospheric pressure. Again the more quickly the fuel is burned, the more explosive force it has.

The fourth method of burning the gasoline would be by turning the gasoline into a pure vapor. The fuel in the other examples became more explosive as more of the fuel is exposed to the oxygen, and therefore, burned much more violently. When gasoline is turned into a vapor or gas, the molecules of the fuel mix evenly between the air molecules. When ignited, the combustion is almost spontaneous. The molecules of fuel could not be more explosive unless the oxygen density is increased. When the vapor enters the cylinder of an automobile, it is compressed in the same manner as the gasoline spray produced by conventional carburetors. This does boost the oxygen density.

Let us visualize the flow of gasoline into an engine using conventional carburetion. The fuel, which is at ambient temperatures, is pumped to the fuel bowl of the carburetor. Here it either passes through the fuel jets or is directly injected into the intake manifold by the accelerator pump. The air passing the jets will be considerably cooler than the ambient temperature, cooling the gasoline, and therefore, making it more dense and strengthening the bond of the molecules of the gasoline to each other. The air in the venturi is moving at a much greater speed than the air outside the carburetor. It will also be at about twenty inches of vacuum. These factors are responsible for the cooling. If

you are a private pilot, you know that even on the warmest summer day, when you go in for a descent, you must not forget to pull the carburetor heat on. If you forget, you could ice up your carburetor, even on a warm day.

The colder the fuel, the denser the fuel. It is not as thin and will vaporize very little.

Now picture the coarse droplets of gasoline entering the intake manifold. They do not pass directly into the cylinder, but slow down in the intake manifold, and wait until one of the cylinder's valves open. The intake manifold has a certain amount of heat that it radiates while the engine is warm. This, of course, helps some of the fuel to vaporize, but only very little. When the engine is cold, you usually have some difficulty starting and warming the car. This is because the engine is not heating the cold gasoline. If an engine needs vapor to run, then how does you car start on a cold morning? When the cylinders compress the air in starting the engine, the heat of compression help to loosen the gasoline to a degree.

After the fuel is drawn into a cylinder, it is compressed along with the air that accompanies it. The air will gain heat in the neighborhood of 450° Fahrenheit. This will help the fuel to become more workable, but not nearly enough. The popular opinion existing on the efficiency of the external combustion engine is that it is from 15 to 25 percent efficient. This is a pretty close approximation as to how much of the fuel is in the vapor state at the time of combustion.

As ignition takes place in the cylinder, most of the fuel remaining is a very coarse spray. Large particles of gasoline are suspended in air. The center of these particles are not exposed to the supply of oxygen, only the outer surface (as in the cup of gasoline). When ignition takes place, the vapor, or suspended molecules of gasoline, along with the smaller particles of fuel are the first to begin the combustion. As the piston is driven down by the combustion, the heavier particles begin to vaporize from the heat. It is a little late for that. We needed the fuel to do it's burning at the beginning of the stroke; and now that the stroke is completed, it has only begun to turn into an explosive medium. Now the piston begins on it's upward stroke and the exhaust valve opens. Now that the fuel

mixture is an explosive state, it is still violently in the process of combustion. The result of venting this exploding fuel is quite noticable, especially if your muffler is in need of repair. At this point, the combusiton is beginning to die down, not because the fuel has been exhausted, but because the oxygen that entered the cylinder with the fuel has been exhausted. Now there is nothing but a rich supply of hydrocarbons in the exhaust gas. Another term for hydrocarbons in this application would be gasoline vapors.

If you are not convinced of this try to remember back in the fifties, in California, what teenagers did for kicks. They would put a spark plug in their exhaust pipe at the very end. They would then throw a switch, rev their engine, and produce a twenty-foot flame from their exhaust pipe! The California police finally put an end to it. Too many cars were losing their paint jobs.

I would say that this is a very obvious example of just how much un-burned fuel is blown out your exhaust pipe. What is worse, it is bad enough that you are not using that wasted fuel to power your car, but you end up breathing it.

It seems that Detroit has made two backwards attempts to cut down on the emmissions of unburned fuel. Rather than improve our carburetion to use the fuel, they tried two methods of dumping it. First, there was the EGR. They realized that the exhaust was so rich with fuel that they tried to send the exhaust back into the intake manifold. This would be a great idea if the unburned fuel was not carried in the exhaust gasses. The exhaust gases are rich with carbon dioxide. Sending this back through your engine would give you a similar result if you shot CO^2 from a fire extinguisher into your carburetor. Needless to say, this was a flop. Most mechanics just disconnect the vacuum line that actuated the EGR when a customer comes in with a rough running engine or one that consumes way too much fuel. I feel that somehow this might have indeed been an honest, but ill-fated, attempt to save some of the unburned fuel. It is possible that the engineers who knew better decided to let this one by to prove how ridiculous the concept of saving fuel was.

The other attempt slightly angers me. They basically admitted that there is far too much fuel being exhausted from the car and it is creating a hazard. Rather than

burning the fuel where they should, they came to the realization that the fuel, after passing the exhaust valves in the engine, would soon stop its combustion process. With this in mind, they decided that since the fuel only stops burning in the exhaust system because it has exhausted the supply of oxygen that was lost to the combustion, then why not just pump fresh air into the exhaust system.

So in 1973 and 1974, this is what they did. The only drawback was, if they pumped too much air into the exhaust system, they would melt the exhaust system because there was such a rich supply of fuel. For this reason the amount of air pumped into the exhaust system in these two years was limited. They could burn only a certain amount of this vapor. By the way, the device that is responsible for pumping this supply of air into the exhaust system is called a *Smog Pump*.

Well, to further complicate matters, someone came up with an idea to remedy the limited burning in the exhaust system due to overheating. It was apparent that no more air could be pumped into the exhaust. The temperature of the exhaust system had already reached a critical point. Why not put some sort of restrictor or collector in the exhaust system to hold this burning exhaust gas until the hydro-carbons or gas vapor was gone? This device did the job. They called it a catalytic converter.

Another thing that was done to prevent unburned fuel from escaping into the atmosphere was to take the lead out of the fuel. Lead caused fuel to burn more slowly than it did before. With leaded gasoline, it would be very difficult to burn all the hydro-carbons in the engine. Since leaded gasoline tends to linger unburned long after the combustion has taken place, it would have fried the catalytic converter.

Unfortunately, as the years have gone by, and since they took the lead out, our gasoline has become of very poor quality. The octane rating is dropping, and as a result, we need to buy more gas to get from one place to another. Remember the words of Pouge's last interview, "I could never attain the mileage that I did in the earlier days, the quality of the gasoline has dropped so much."

Now that we have followed the process of liquid gasoline particles through an internal combustion engine and seen how much of the fuel is wasted in that fashion, let's take a

look at how gas vapor reacts when introduced to an internal combustion engine. You must remember the importance of the burn rate. Before you can appreciate the full value of vaporization, you will have to understand the value of burn rate.

A popular example of this is the atomic bomb. Whether or not you realize it, it is not the radiation from the bomb that creates the devastating shock wave that leveled cities, but the heat generated by the bomb. That's correct, the heat. When an atomic bomb is detonated, a chain reaction is the result. The atoms from within the bomb send out a tremendous chain reaction that spreads throughout the atmosphere (or air) surrounding the bomb. This air becomes so superheated in such a small period of time that the air itself, expanded by the heat, will literally explode. So the instant expansion of air due to the heat that it was exposed to has wiped out a city.If you would like to stand there and measure the exact amount of heat that was generated by the bomb with a temperature gauge, and were able to determine how many BTU's of heat were generated, you would find that it is equal to a number of days of sunshine. Sunshine? Yes sunshine. If the time that the air surrounding the bomb exposed to the heat were measured, then you could mathematically determine how many days of sunshine would equal the number of BTU's of heat generated and the volume of air. So what I am saying here is that if you could store the heat generated in your back yard for a number of days in a box, then release all that heat in a fraction of a second, your neighbors would not be happy with you. You would have equaled the force of the atomic bomb.

The overall point to be made is that the rate of speed at which you utilize a given amount of heat will determine how much explosive capacity the heat source had.

When we are talking about the internal combustion engine, we are talking about the pressure of the gases in the cylinders as the gasoline expands them from the amount of heat generated by the gasoline. Theoretically, if one drop of liquid gasoline were in a cylinder in the form of a drop, when ingnited, it would generate so many BTU's of heat, over a given time. If that drop had been given time, eventually it would transfer the heat generated to the air in

the cylinder, providing the air supply was not exhausted before the drop of fuel was. As a result, the air in the cylinder would expand to a given pressure. Unfortunately, the engine is turning at a speed of 800 revolutions per minute. that means that the cylinder is occupied and then exhausted over six times a second. Even with seven atmospheres of pressure in that cylinder, that will not leave that one drop much time to burn.

Now, let's give that drop a chance to burn in the vapor state. In the cylinder with seven atmospheres of pressure with the molecules of air, the drop in vapor state will not only have time to burn, but it will have time to transfer it's heat to the air in the cylinder; therefore, expanding it and creating the pressure needed to drive the piston down.

This example, of course, is an over-simplification of the operation of an engine. The point made is that when gasoline enters the cylinder in the liquid form, before it has the chance to vaporize, it is expelled from the cylinder unspent.

Since the liquid gasoline continues to burn after the downstroke and even the exhaust stroke, a greater amount of heat is transferred to the engine block rather than to the expanding gases in the cylinder. This causes a greater amount of wear on the engine.

In burning pure gas vapor, the engine will not only last longer, but will operate at a much cooler temperature. This is because less fuel is burning in the engine. The fuel that is burning has a much shorter duration of combustion than liquid gasoline.

This theory is not only my own. Charles Pouge removed the radiator from an automobile and operated it in this fashion to illustrate this point. The spark plugs will have a longer life for the reduced amount of hydro-carbon deposits and the oil will have a much longer life due to the reduced amount of heat and carbon deposits. This was proven by the Flex Carburetor. I have heard the reports of mechanics who, after ten years of operation, have broken down the engines that have operated on the Flex system and report that they were shocked at the lack of wear.

Another advantage of gasoline vaporization is that the exhaust gases are almost completely non-toxic. Carbon monoxide is hardly detectable when operating on vapor

and the hydrocarbons are almost nonexistent. The primary gas or chemical element composing the exhaust gases will be carbon dioxide.

As stated earlier in this book, carbon dioxide is harmful to the atmosphere. But in existing carburetion, the amount generated is much greater. When any hydrocarbon fuel is burned, carbon dioxide will result. Since far less fuel is required to be burned, far less carbon dioxide will result. Carbon dioxide is the same gas we exhale from our lungs.

Chapter 6
C.T.E. Vaporizers

In our initial vaporizer design, we did not know of what methods the other inventors used in vaporizing gasoline. Soon after the public disclosure of our unit, we found that the path that we had chosen was quite similar to the Pouge and Flex systems.

I chose, in my design, to use the engine's waste heat. Actually, there should be no such thing as waste heat in an automobile as precious as energy is today. Since it does exist, it might as well be put to a productive use.

The sources of the waste heat that I selected to use were the exhaust gases and, also, the engine coolant.

For the supply of this heat, I tapped into the exaust manifold and for the engine coolant, the heater hoses.

I will describe the construction of our units in order that they were developed. First, we used the exhaust gasses with a heat exchanger. This heat exchanger is composed of a series of tubes that transfer the heat from the exhaust gases to the flow of liquid droplets passing through them.

In this system, Wagner System #1, there are three basic sub-systems. System A, The fuel system; System B, the air supply system C, the exhaust gas system.

System A (Fuel system): The fuel in conventional carburetion is drawn forward to the engine by the existing fuel pump. Since the vaporizer unit requires engine heat for its operaton, then obviously the vehicle must be started from a cold start with the existing carburetor. For cold starting, the fuel supply must be routed from the fuel pump to the conventional carburetor. Once the engine has generated enough heat to operate the vaporizer system, the fuel flow must be directed to the vaporizer unit. There is a pre-manufactured valve that served this purpose. I found a fuel relay valve normally used in pickup trucks to switch the fuel flow from one tank to another when using dual

tanks that would suffice.

The valve is electrically operated by a switch on the dashboard. I would wait until the heater in the vehicle got hot, then switch the fuel flow to the vaporizer. A more accurate and more expensive means of monitoring the unit's temperature is by installing a temperature sensor and guage. From the fuel relay switch, the fuel would be directed either to the carburetor or the vaporizer unit. On the way to the vaporizer, the fuel would first have to pass through a regulator valve. This regulator regulates the fuel pressure to the vaporizer unit. In addition, this valve regulates the flow of fuel in proportion to the engine requirements. This is accomplished by connecting the valve to the carburetor linkage by use of a mechanical linkage. This linkage, when the accelerator pedal was depressed, would open the valve. From the valve, the fuel would pass into the vaporizer unit where it then passed through a fuel nozzle. Here the fuel mixes with the supply of air that is on its way to the heat exchanger. The nozzle was difficult to locate. I needed a nozzle that would produce a fine spray of fuel at a very low fuel pressure.

The nozzle that I finally located for this application was a Volkswagen Rabbit cold start nozzle. This nozzle is used on the Rabbit and other fuel injected cars to prime the engine and bring it to idling speed by spraying a fine mist of fuel into the intake manifold. It was of great value due to the fact that it produces this spray at as little as one pound of pressure. Being this versatile, it was of great benefit in this application. The cold start nozzle also had a couple of extra benefits that I was not expecting. First, it had a solenoid valve built in that would immediately stop the flow of fuel when it is turned off. A twelve volt electrical current opens it again. Also, it has a heating coil in it that will bring the fuel up to a slightly higher temperature.

System B (Air supply system): In this first unit constructed, I drew cool fresh air from the atmosphere through an air filter for supporting combustion in the engine. The air was pushed forward by a fan that was driven by the fan belt. This supply of pressurized air then passed the fuel nozzle where the fuel was introduced. This fuel/air mixture would then pass into the heat exchanger where it would be vaporized from the heat of the exhaust

gases. At this point, the vapor-rich air could proceed to the carburetor or, what was not allowed to pass into the carburetor, was sent back to the intake side of the fan. From this point, the vapor would continue through another cycle. This approach we latter abandoned.

After leaving the vaporizer unit, which was located next to the engine, the vapor would travel to the carburetor. The air cleaner was removed from the carburetor and, in its place was a safety box. This box was attached to the carburetor in the same manner as the air cleaner with the mounting bolt and wingnut. When the vaporized gas reached this box, it would push past a spring loaded door that would normally remain closed. It would then proceed into the mouth of the carburetor.

If a flashback or backfire occurs, the combustion in the intake manifold would reduce the vacuum in this box, therefore causing the spring loaded door admitting the vapor to close. This was to take place prior to the combustion reaching the top side of the venturi. If this occus, there was a bleed or relief door installed in this box to vent the pressure accumulation safely into the atmosphere. Again, the spring loaded door admitting the vapor to this box would close prior to the entrance of the combustion activity, thus preventing the combustion from traveling back to the vapor generator unit itself. In tests, this saftey system proved to function very nicely and safely. This arrangement in later units also was redesigned.

System C (Exhaust Gas System.) As earlier mentioned, the exhaust gases were extracted from the exhaust manifold. The exhaust gases, I realized, were from 400 to 1,200 degrees fahrenheit. This was adequate for vaporizing gasoline. Gasoline is composed of around 27 chemical elements. The lighter ones tend to vaporize at as little as 30 degrees F. The heavier elements will not vaporize until exposed to as much as nearly 900 degrees of heat. (See Illustration #1)

With the heat available from our unit, we were able to attain a satisfactory amount of vaproization.

The exhaust gasses travel out of the exhaust manifold through metal tubing to the heat exchanger box. The core of the heat exchanger is constructed of a cage of about 50, 1/2"

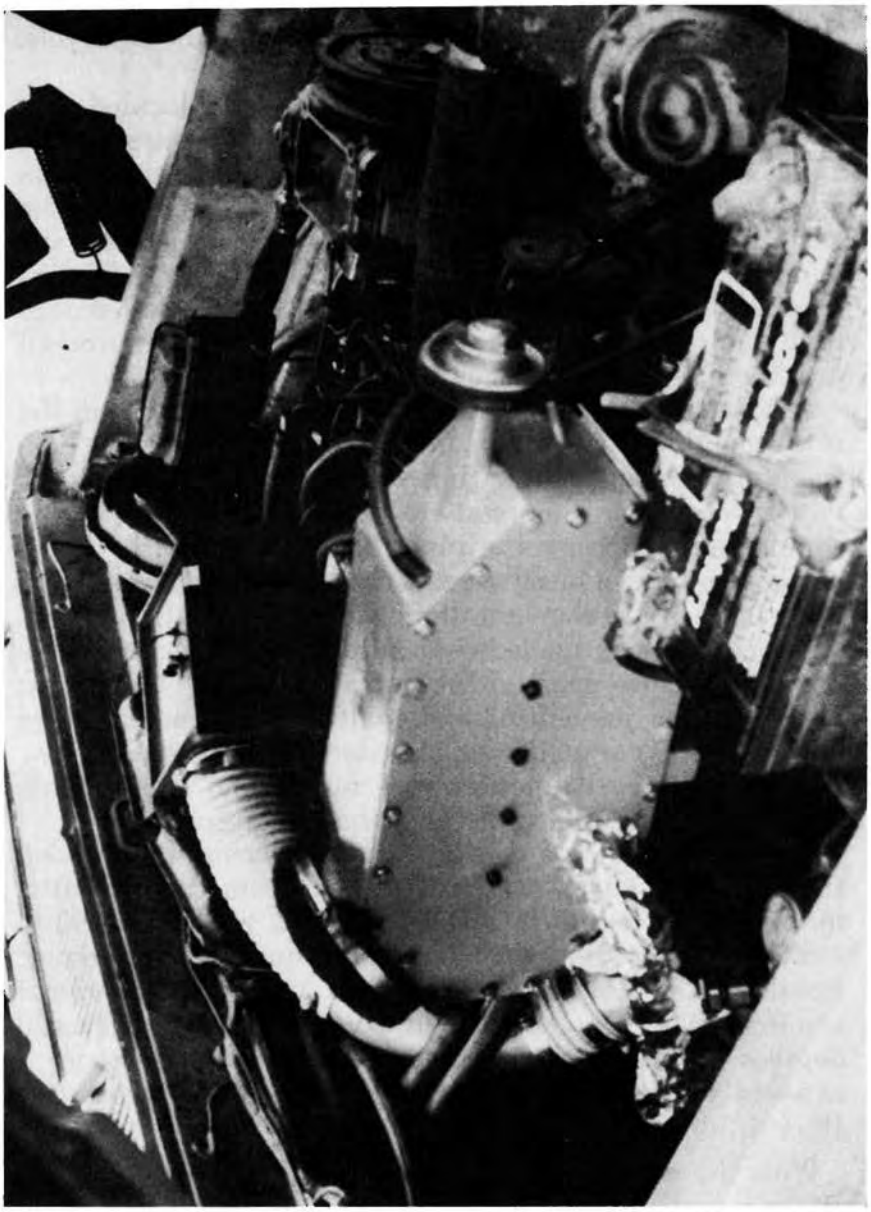

Illustration #1

tubes. These tubes have a face-plate on each end. These plates are simply two flat plates that a honeycomb pattern of holes drilled in them through which tubes will pass. Each of the tubes had to be carefully brazed into the flat plates to insure that no exhaust gases passing around the outside of the tubes would be able to reach the front or rear of the face plate. The fuel/air mixture will approch the face of this honeycomb plate, then pass through the 1/2 inch tubes. The heat that the outside of the tubes conduct from the exhaust gases will travel through the tubes and as a result, will vaporize the fuel particles passing through the tubes. If the spray of fuel were allowed to pass straight through the tubes, chances are that the particles would not come in contact with the heated tubes and therefore never become vaporized.

For this reason, steel or aluminum screens are inserted into each of the tubes. These screens collect the particles of fuel and bring them in contact with the heated walls of the tubes. What I used is standard screen of the same standard mesh as used in a screen door. This was cut into about one and a half inch widths and to the same length as the tubes. This was rolled around a pencil then loosely twisted and inserted into each tube. A retainer screen was required on the rear side of the heat exchanger to prevent any screens from being drawn through it and into the carburetor.

The exhaust gases did pass directly from the exhaust manifold and into the side of the heat exchanger. After passing through the exchanger, the exhaust gases then pass through a regulator valve. Placing this valve on the intake side of the exchanger would subject it to temperatures too great and would break down the packing of the valve. This valve is required to regulate the heat of the tubes. The more exhaust flow through the chamber, the more heat will be transfered to the fuel passing through the tubes.

That is the first basic system. With this arrangement, we attained 80 miles to the gallon according to our findings.

Chapter 7
The Second System

The second system is basically a refinement of the first system. The second system will be discribed by each sub-system as the first was. "A" - The Fuel System, "B" - The Air Induction System, and "C" - the Exhaust System. (See Illustration #2)

System "A", (The Fuel System). Following the fuel flow from the gas tank to the vaporizer unit was considerably different in the second system. We found that the mechanical fuel pump produced a pulsating fuel pressure to the nozzle in the unit, for this reason the mechanical fuel pump was removed and replaced with an electric fuel pump. The electric pump needs to be located as close to the fuel tank as possible. Electric fuel pumps push fuel much more efficiently than they pull. After the fuel was directed forward from the fuel tank by the pump it reaches the fuel relay solenoid. This valve either directed the fuel to the vaporizer or the conventional carburetor as in the first system.

From this valve, the fuel, if directed to the vaporizer, will reach the fuel heater. We felt that the actual heat exchanger in the vaporizer wouldn't have to work quite so hard if the fuel was pre-heated prior to reaching it for vaporization, especially if the fuel is the same temperature as the outside temperature on a sub-freezing day. This fuel heater attained its heating capacity from the engine coolant. The heater consisted of a small 6 inch long by 4 inch diameter piece of pipe with a coiled copper fuel line through the center. Of course the ends of the pipe had to be capped to contain the heated water flowing through it. Two holes were drilled into the side of the case and then two nipples of the same outside diameter as the existing heater hoses were attached. Our hose was 5/8". By clamping a "T" in each of the hoses leading to and from the heater, we were able to

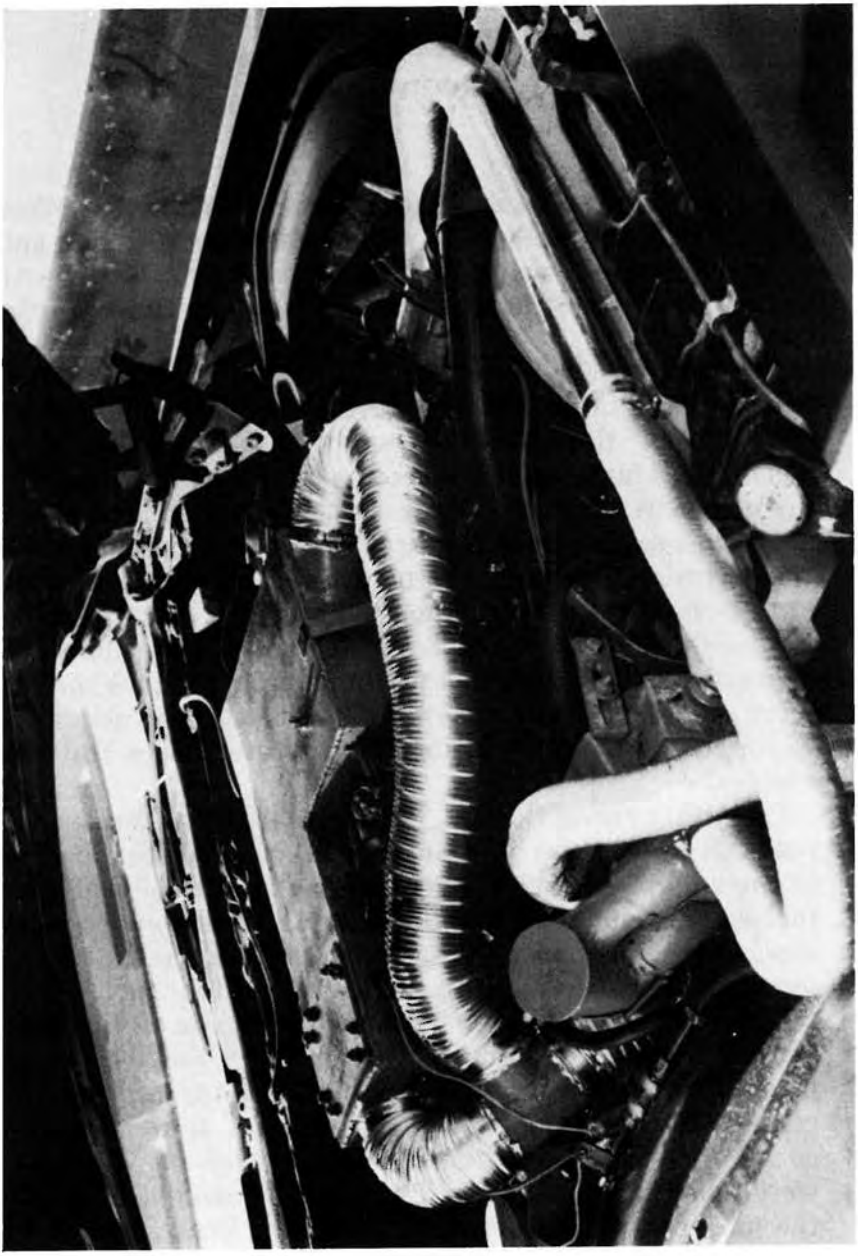

Illustration #2

attain a consistant flow of heated water through the pipe that housed the coil. We could therfore transfer the desired amount of heat to the fuel passing through the coils. Some automobiles and trucks have a thermostat set at 195 degrees. This is too much heat to expose the fuel to for this pre-heating process. A water regulation valve had to be installed to regulate the amount of heat to be transferred to the fuel. This was installed in one of the heater hoses leading from the heater hoses to the fuel heater. (See Illustration #3)

The copper tubing used inside the heater was of the same diameter as the existing fuel line. Generally this is 5/16ths". One important factor that we had to consider was to make all of the attachments from the engine to the frame of the vehicle with rubber fuel line. We have since learned that some people tried using copper tubing from the engine to the frame or fender of their vehicle and the vibration of the engine broke or cracked the line, creating a fire hazard. We tested the heater by attaching a garden hose with a clamp to it and blocking the other nipple. Once we turned on the water pressure, if there were any leaks in the canister, they became apparent at this time rather than when the unit was installed on the vehicle. Heating the fuel in this manner without a vaporizer has increased mileage according to reports that we received by as much as 50%. This was directly routing the fuel from the fuel pump to the carburetor with a fuel heater in the line.

In this system, after leaving the fuel heater, the fuel then passed the fuel regulator valve. Either a needle valve or preferably a metering type ball valve had to be secured to the engine manifold or another location. But as long as it was on the engine, this linkage could be attached to the carburetor arm and then to the valve.

The method that we chose to link the valve to the accelerator linkage was to drill a hole into the arm of the carburetor, pass a connecting rod through the hole and, as the arm moved, the valve would also be moved in direct proportion. (See Illustration #4)

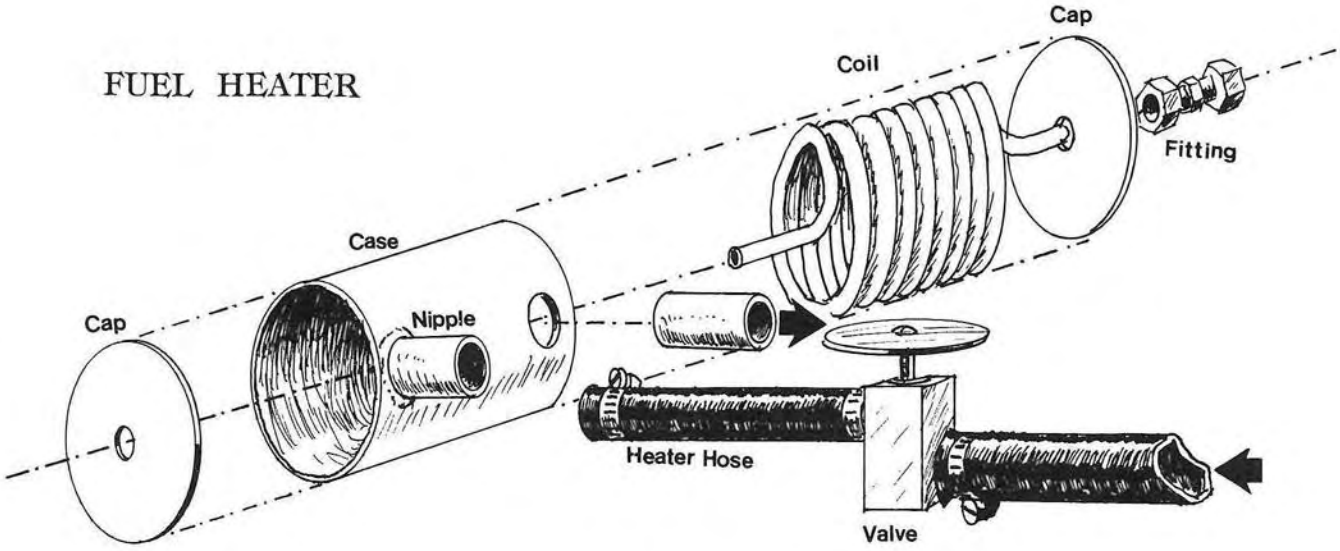

Illustration #3

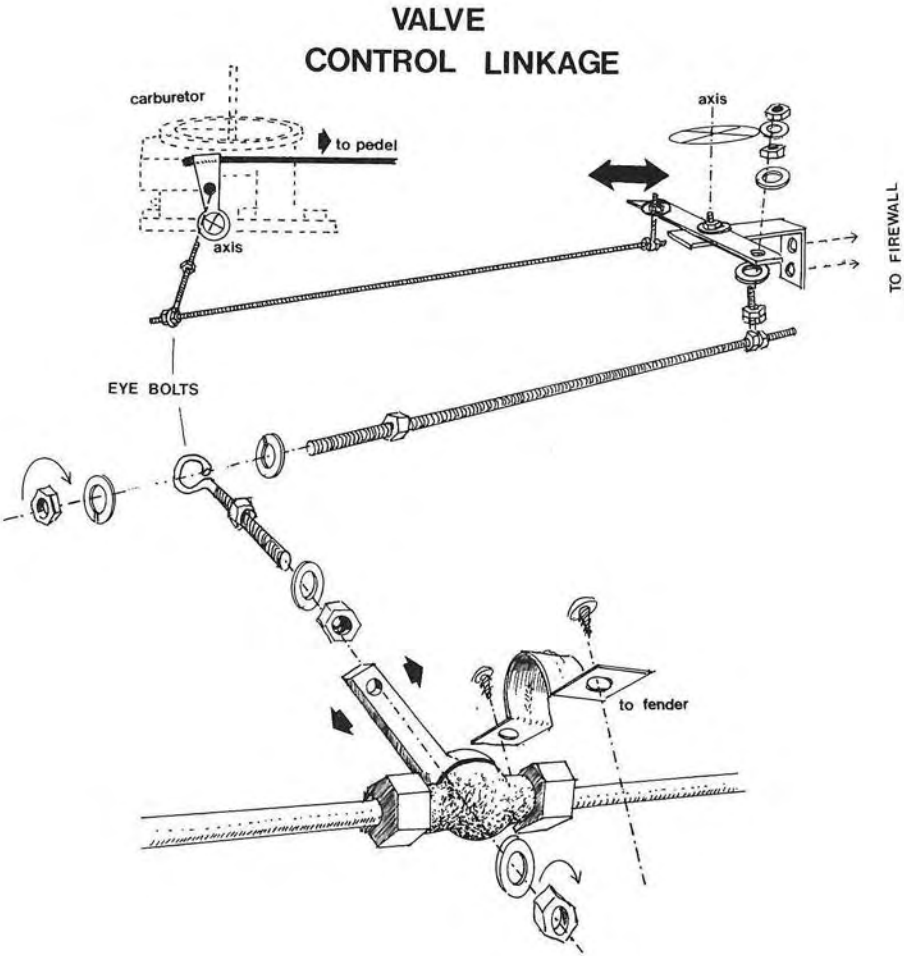

Illustration #4

As shown in illustration No. 4, the linkage tying the carburetor to the valve consists of two pieces of threaded rod, four eye-bolts that slide onto the rods, a double nut arrangement for each retainer nut required consisting of two nuts of the proper thread size to fit onto the threaded rod and lock-washer to fit between the two nuts. A flat piece of metal to serve as a pivoting arm that is 6 iches long and 1 inch wide plus a 90 degree bracket which will be screwed to the firewall of the vehicle completes the linkage. The pivoting arm rotates from the end of this bracket.

When selecting eye-bolts for this application, we used those that had an inside "eye" diameter about equal to the outside diameter of the threaded rod. We screwed one nut into the rod, slid on a washer, than inserted it through the eye-bolt. Once the eye-bolt was placed next to the nut and washer on the rod, another washer and nut were screwed firmly into place to secure the eye-bolt onto the rod. As can be seen in Illustration B, the double nut assembly is screwed onto the shank of the eye-bolt.

The two nuts were tightened firmly against each other with the lock washer between them. This serves as a retainer. Once, this was done, the exposed end of the eye-bolt shank was inserted into a hole drilled into the carburetor arm. The hole required needed to be the same diameter as the shank of the eye-bolt. Another double nut retainer was placed in the end of the shank that extends through the other side of the carburetor arm. As each of these double nut retainers was located on either side of the carburetor arm, they were tightened toward each other. Each of these retainers is already secure and won't move on the eye-bolt shank because the two nuts were already tightended against themselves with a lockwasher. It was important that the two retainer assemblies were spaced far enough apart that the surface between them (in this case, the carburetor arm) move quite freely with no pressure applied to this surface from the retainers. This same method with the eye-bolts and retainer nut assembly was used in connecting the rods to the pivoting arm and then from the opposite end of the arm to the valve.

Before we could connect the rod to the valve, we had to find how far the valve must travel. With most of the vehicles that we installed the unite on, the path of travel did not

exceed over 1/2 inch. We determined where the valve was to be set when the vehicle was idling by running the engine up to full temperature with the valve wide open. Then, bit by bit, we began closing the valve. By starting the process with the valve completely open and then by slowly closing it a fraction at a time (allowing a few minutes between adjustments), we found where the engine began to run rough from lack of fuel. At this point, we opened the valve until the engine began to smooth out. In doing this, we found just how little fuel was required to operate the engine at an idle when the fuel and air were both heated and the vaporizer operating. Once we found this valve setting, we marked the valve for future reference. We knew that when we set the valve to the linkage that we never wanted to have the linkage push the valve past this mark; othewise, the engine would die. Now, what we needed was to find the maximum setting for this valve.

Considering that the vaporizer is operating correctly in the efficiency of the heat exchanger's operation, the maximum setting of the valve must be determined without allowing an over-rich mixture of fuel to be permitted into the engine.

The proper setting and operation of the heat exchanger will be explained in the description of the exhaust system later in this book.

Once the vaporizer is operating properly and satisfactory results were attained while idling, the unit was ready for the road test. The vehicle needed to have the fuel regulator valve opened all the way. Again, only if the vaporizer was satisfactorily vaporizing the amount of fuel pasing through the primary heat exchanger would the vehicle be ready for the road test. Once the fuel was being totally vaporized, the vehicle was taken for the road test. We made sure that it was at a time of day or night when the least amount of road traffic would be encountered. If the vehicle was getting too much fuel, it was best not to operate it for long periods of time. Too much heat would be transfered to the engine and valve. Once on the road, the vehicle would be put to the test. If the acceleration was sufficient and the fuel was sufficient for cruising, the valve would be closed to a smaller setting. If the fuel was still sufficient, this process would be repeated until performance problems. were encountered. The valve

could be opened until the results were again satisfactory. This setting would be the maximum setting for the valve. Cruising requires far less fuel than acceleration does. This process is time consuming and difficult to perfect. As a matter of fact. I cannot claim that I mastered it to perfection. The weather changes also effect the preformance once the system is properly adjusted.

Different fuel nozzles and methods of regulation may be experimented with for improved control of the fuel regulation. The fuel system consists of the fuel pump (electric), the fuel relay solenoid, the fuel heater, the fuel regulator valve and the fuel nozzle. (See Illustration #5)

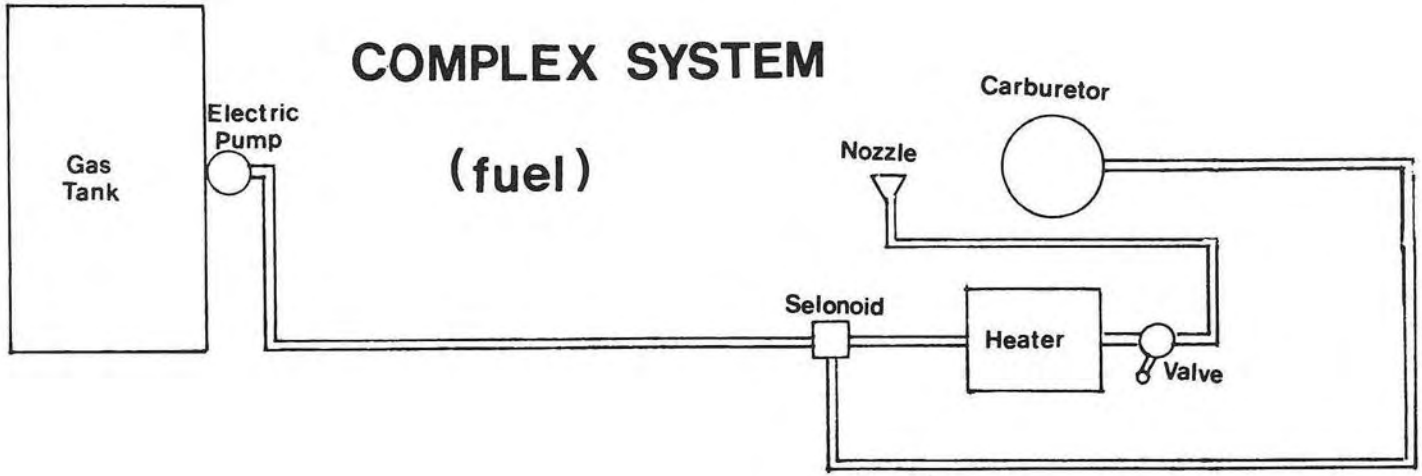

Illustration #5

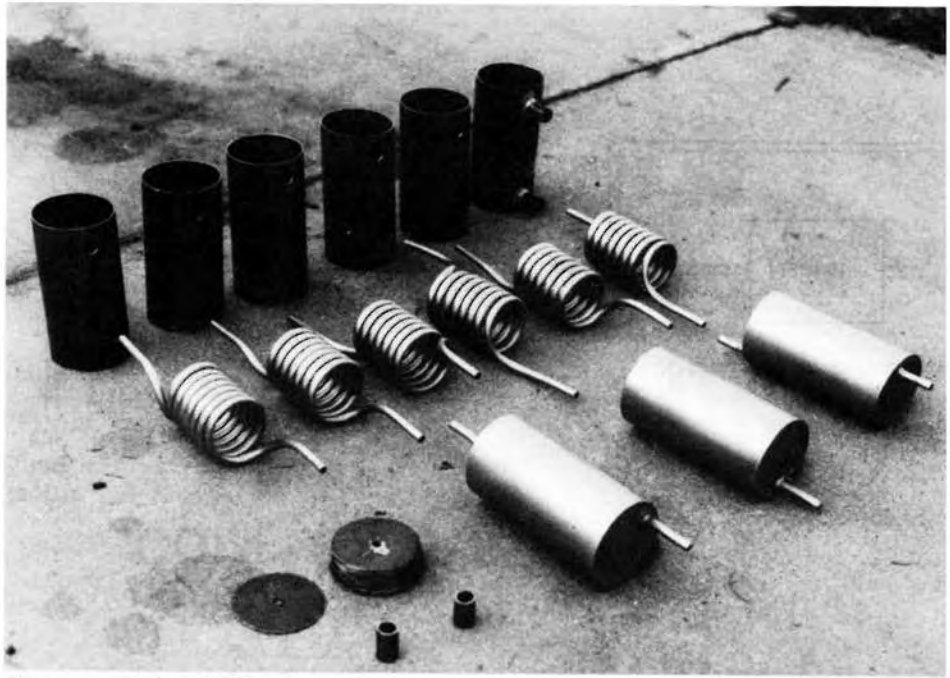

Several Fuel Heaters in Various stages of completion

Chapter 8
Air Induction

System B (The Air Induction System): The air induction system was quite a bit different than in the first unit also. We decided to heat the fuel in this unit to ease the job of the primary heat exchanger. We knew that the cold air would also tax the exchanger, so we therefore heated the air prior to introducing it into the vaporizer system. This was accomplished by drawing heated air from the outside of the exhausted manifolds in the same manner that many cars do now for warming the engine. A shroud was placed over each exhaust manifold encasing it with a spout on the top to which a two inch diameter flexible tube was affixed. This tubing is already used for this purpose in automobiles. It will either be made of aluminum or asbestos. We purchased it in six foot lengths. The shrouds were constructed of drain guttering used on house roofs. The type of guttering that we selected had a downspout in it. This spout nipple had an outside diameter of about two inches.

With tin snips, we fashioned the tin guttering to the contour of the top of the enhaust manifolds. Holes were drilled in the guttering through which the exhaust manifold bolts would pass to secure it in place. On newer vehicles, we found that one of the exhaust manifolds already came with an exhaust manifold shroud. The was ideal. All we had to do was fabricate one for the other side. Four and six cylinder engines required the fabrication of only one shroud. The heated air that was attained from the shrouds was then drawn into the pump or blower. Before the air was able to reach the blower, it had to pass through an air cleaner. The vaporizer unit was sitting in the place of the old air filter, so it needed to be located in another area. An air filter was located that was tall and cyclindrical. The older 1955 era cars quite often had filters of this shape. A tall piece of pipe or tubing that was large enough to loosely

encase this filter was selected to house the filter. An upper and lower cap for the pipe had to also be fabricated and attached. The air was drawn in through the sides of this "can" and was then drawn out after passing through the filter through the top of the can. The heated and filtered air then proceeded up into the intake side of the air blower. Blowers of this sort could be purchased prefrabricated, but or cost, we decided to build our own. The function of the blower was to produce a pressurized supply of air. The reason we needed the pressurized air was to compensate for the expanded air that had become far less dense due to the fact that the air had been heated. In other words, for increased air density.

The air supply needs to be kept in proportion to the engine requirements, therefore, we had to drive the blower with the fan belts. The advantage to this was when the engine speed increased, the blower speed would increase at the same rate.

The only short-coming with this design was that in acceleration, the engine would require the increased air flow before the engine speed increased. Also when the engine was to decelerate in speed, the air pressure had to decrease before engine speed did. What I designed to deal with this problem was an air bleed door. This door would be spring loaded closed. Once the engine was operating, the pressure from the blower would blow open the spring loaded door allowing a certain amount of air pressure to escape. When the engine was to accelerate in speed, the intake manifold pressure will lower, and therefore the spring on the door will close, maintaining the pressure going to the carburetor. When the engine is to decelerate,the door will be forced farther open because of the increased pressure, maintaing a fairly constant pressure under different engine operations.

For the blower construction, the only blower fan or impeller that I could find to fit this requirement was a vacuum cleaner impeller. Squirrel cage type fans do not produce any significant pressure but Vane type fans are designed to produce pressure. The impeller that I selected is cast from aluminum and is areeady precision balanced. The impeller was originally from an upright Kirby, Eurika or Hoover vacuum cleaner. All of their impellers are basically

the same. (See Illustration #6b)

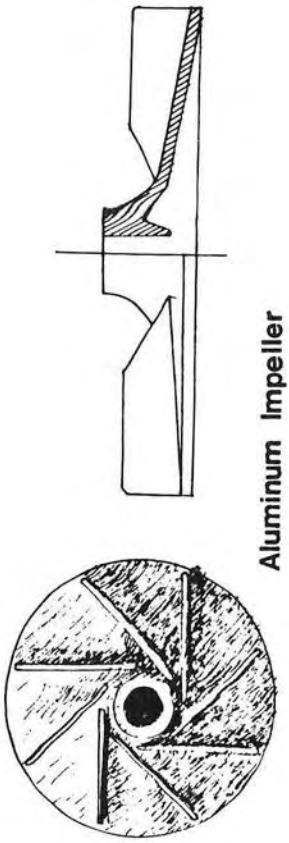

Illustration #6B

We got ourselves into quite a project with the construction of a blower. All of the angles and measurements needed to be precise. If one bearing support was not exactly in line with the other, the bearings would be worn out almost immediatly. As can be seen in the illustration, the blower is basically constructed of a metal box, (1/8" steel) two plates, and bearing supports. We used ball type bearings packed with synthetic lubricant due to the stress that they would be placed under. We used 1/2" hard steel shaft for the assembly. A 3" piece of flexible tubing connects the air pump to the air cleaner and also to the vaporizer unit, also needed was a 3" diameter nipple to accomodate this tubing. (See Illustration #6a)

The parts to construct this unit were found all over town. The 3" tubing that we needed is used in fireplaces and in air conditioning. It is lightweight and tough. The rear bearing support in the blower was dead center in the intake nipple that supplied the air to the blower from the filter can.The bearings and shaft needed to be secure with small retainers to insure that there was no back and forward movement of the shaft and impeller in the blower. The tension of the spring required seems to vary with each vehicle that it was installed on. We just had to guess and tinker to get it right. I tried putting a double impeller blower on my 455 c.i. engine. I was worried that one impeller wouldn't be enough. I produced so much pressure into my carburetor that I blew my accelerator pump gasket out completely. I decided afterwards that one was enough. This blower was not supposed to be as efficient as a turbo-charger. Its only function was to slightly condense the expanded and heated air.

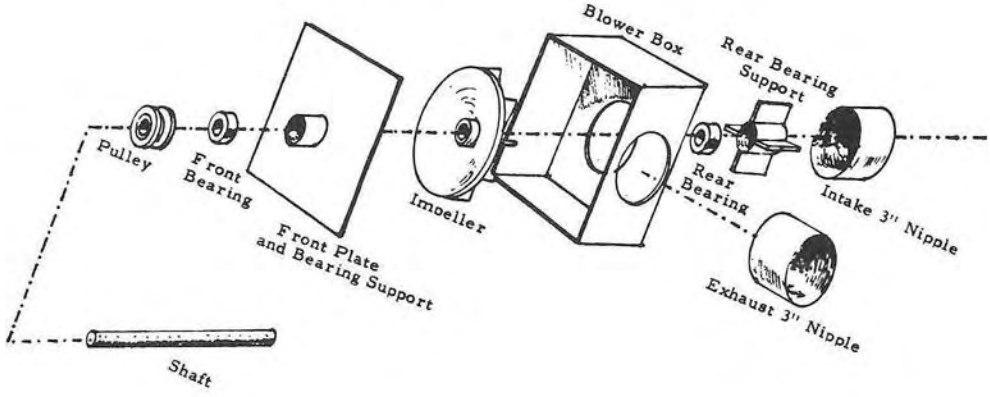

Illustration #6A

A smaller amount of the air flow is directed through the primary heat exchanger. The reason for this was that we discovered that passing all of the air to be consumed by the engine through the primary heat exchanger tended to cool it too greatly. Heat that could have been vaporizing the fuel particles was being lost in great quantities to the air flowing through it. Less than one seventh to one eighth of the air flow will pass through the heat exchanger. In fact, as little as possible will pass through in order to carry the fuel. A restrictor "T" was constructed for this purpose. The opening to the heat exchanger was reduced until we were satisfied. Again the bulk of the air flow was directed to the mouth of the carburetor where the airflow met the vapor.

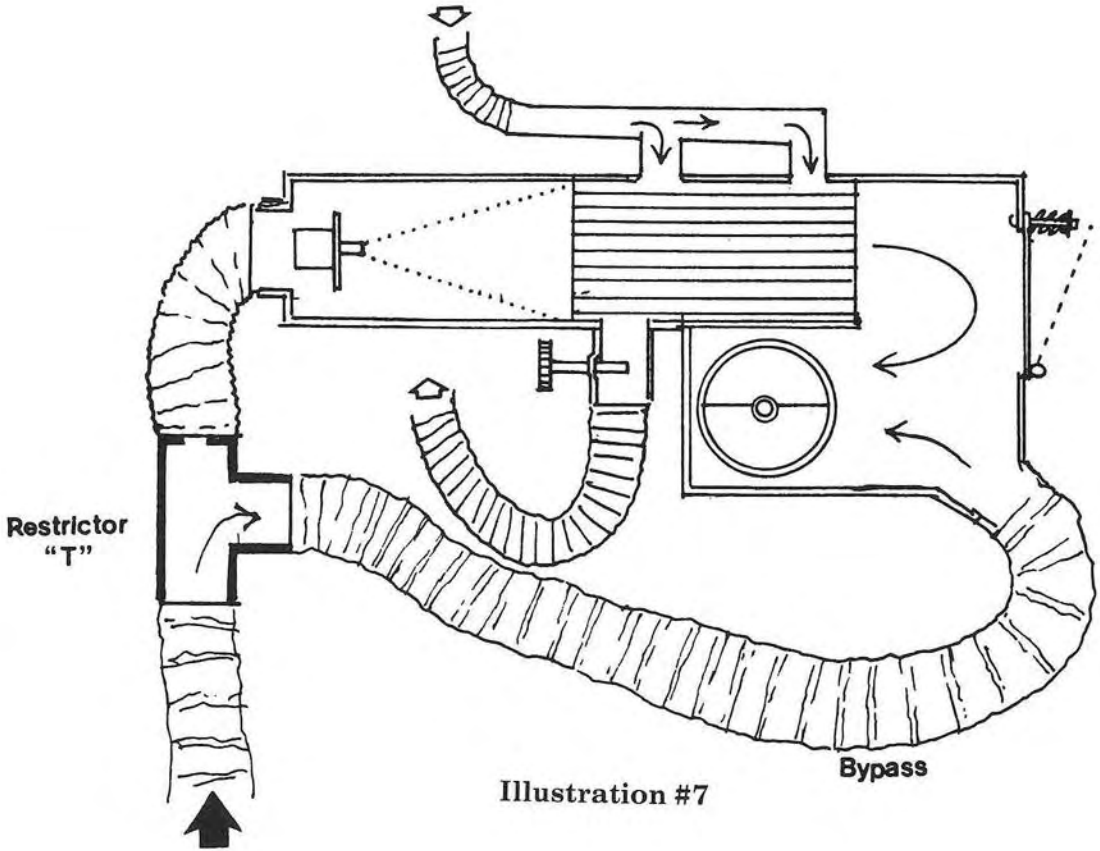

Illustration #7

Chapter 9
The Exhaust Gases And Heat Exchanger

Mentioned earlier was the fact that we need to be sure that the flow of fuel vapor did not come in contact with the exhaust gases flowing around the outside of the tubes in the heat exchanger.

Up to this point, we had heated the fuel, regulated down the fuel flow, heated the air, and now pressurized the air. These factors combined are enough to not only produce an increase in mileage, but should do it with a considerable amount of consistency.

But all we have done at this point is encourage the vaporization of fuel by applying heat to the fuel and air. In order to attain the maximum efficiency from gasoline, it must be completely vaporized. We cannot find a way of completely vaporizing the fuel using the existing carburetor, so we decided to generate the pure gas vapor outside the carburetor.

As we mentioned earlier in this book, the medium for producing pure vapor is to use the waste heat from the exhaust system. What we do at this point is route the fuel that has already been heated and regulated to a fuel nozzle that will spray this heated fuel into the airstream which has already been heated and pressurized. This mixture will pass through what we call the primary heat exchanger.

The heat exchanger is composed of about 50 small tubes, one-half inch in diameter. The number and length of the tubes varies with each installation, but we will discuss this later.

Once the heated fuel enters the heated airstream, the mixture passes through the inside of these super-heated tubes. Again, the exhaust gases are passing around the outside of these tubes, heating them. Inside of each one-half inch tube, there is a loosely wound piece of stainless steel or aluminum screen. This screen is the same as the length of

the tube and, before it is inserted into the tube, it is cut to a width of one and one-half inches. It was wound around a pencil or similar object to form it into the proper shape. Before inserting it into the tube, it was slightly twisted. The function of the screen is to catch the fine particles or droplets of fuel as they pass through the tubes. The droplets must be brought into contact with the tube surface itself or the fuel could be drawn through the tube without being vaporized within the hot tubes. (See Illustration #8)

Here the two will combine, evenly distributing the fuel vapors and the hot air supply. The box is shaped in the "L" configuration for space utilization. Notice that the opening for the carburetor is located along side the primary heater. This more or less centers the entire unit over the engine. If we tried to build the unit with everything in a straight line, the unit would not fit under the hood of *any* vehicle.

Since this unit is to be mounted on a carburetor, it is necessary to weld a lip or riser to the underside of the hole to space the unit slightly above the carburetor's mouth. There are obstacles around the mouth of most carburetors that will not allow the box to rest evenly unless a lip or riser consisting of a short (3/4-inch) piece of pipe is welded to the underside of the hole in the box.

The size of the hole to be drilled in the bottom of the box and the 3/4-inch spacer should both be the same diameter as the throat of the carburetor on which the unit will be mounted.

The size of the box depends on the size of the engine and also the amount of room under the hood of the vehicle. The unit on our test vehicle (the 1974 Buick) is 24 inches wide, 12 inches from front to back at the carburetor, and 6 inches from front to back at the fuel nozzle area. The unit is three inches tall plus the 3/4 inch spacer on the carburetor mouth.

This unit is larger than it has to be, but when building an experimental unit of this kind, it is better to over compensate than to under compensate. The tubes in the primary heat exchanger of this unit are 9 inches long. We have tested a 351 c.i.d. engine on vapor with 4 inch long heat exchanger tubes. There is a lot of room for varience, but if the heat exchanger is smaller, more heat must be applied.

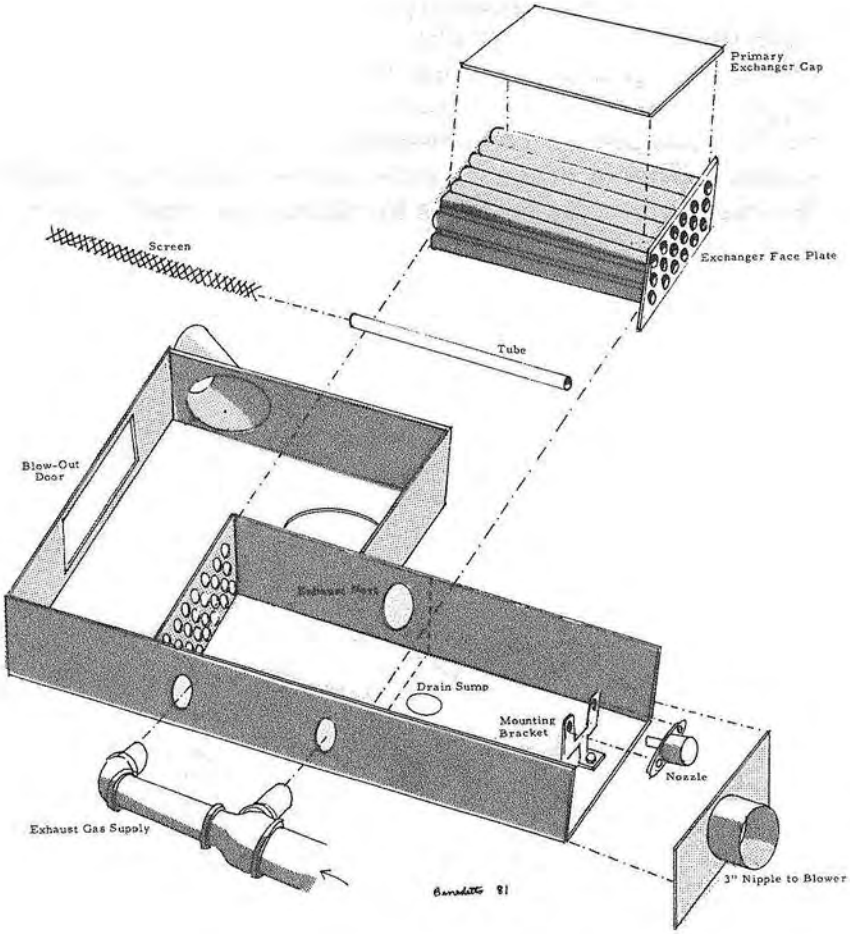

Illustration #8

In this heat exchanger box, you will notice a blow-out door. The requirement for this component is vital. The entire box must be air tight. If a leak in the box allows the pressurized gas vapor to escape the unit, the vapor will fill up the underside of the hood. Since the distributor cap is not sealed or airtight, the vapor will be ignited. This blow-out door keeps in the pressurized vapor, but, if a backfire occurs, it will safely vent the pressure build-up into the atmosphere. This door must be air tight. It is held closed by a strong spring (ten pounds or more) against an air tight gasket. Again, if the box is constructed of 1/8-inch steel, and the unit is equipped with a blow-out door, safety should not be a concern. That is, of course, if the unit is absolutely air tight. We check our units for leaks by filling them with water.

Chapter 10
The Primary Heat Exchanger Unit

We have touched on the primary heat exchanger and its purpose. It consists of around 30 to 50 one-half inch diameter, thin wall tubes that range in length from four to nine inches. The size of a heat exchanger for a particular vehicle depends on the size of the engine. As we mentioned before, it is better to play it safe and build it a little larger than the vehicle might require. For a four cylinder engine, we use 4-inch tubes; for a 500 c.i.d. V-8, we use 9-inch tubes. The number of tubes would range from 30 to 50 on those engines.

In constructing the tube carriage, we first determined the dimensions of the heat exchanger. On the example of the Buick, the box was three inches tall, and the case for the heat exchanger assembly was six inches wide. The tubes were nine inches long. This was to be size and shape of the exchanger assembly. We started with two solid 1/8-inch thick steel plates, three inches by six inches. On these plates, we scribed an arrangement of about 44 one-half inch holes through which the 1/2-inch tubes would pass. Actually, we had to measure the outside diameter of the tubes and mark the holes for them to be slightly larger. The tubes were thin walled steel.

The holes marked were arranged in a honey-comb pattern. It was important that as much of the face of this heat exchanger as possible be tube ends allow maximum exposure to the gas that would be sprayed into them.

Again, the holes that the tubes were through in the plates were drilled slightly larger than the outside diameter of the tubes in order for the tubes to be inserted with ease. Once all the tubes were extending through both plates, the tubes were brazed to the base plates, insuring that each was air tight. It was important to keep in mind that one side of the plate would contain pressurized exhaust gases and the other side, a fuel/air mixture. The two should never mix.

The tube carriage is lowered into the "L" shaped box. Before the carriage is permanently mounted, the inlet and outlet ports for the exhaust gases are drilled.

The size of the exhaust line carrying the supply of heat was also determined by the size of the engine. It was critical here that we also over compensate rather than under compensate. The exhaust gas flow could be easily regulated down, but once the installation of the line was made, it would be very difficult to increase the flow. On the test vehicle, the exhaust gas line is one and a half inches in diameter. If the unit were installed on a Pinto, needless to say, the exhaust pipe would not be that large, but the more exhaust gases that can be applied for heating, the better.

Also shown in the illustration, the exhaust gases enter the exchanger at two locations. This helps the heat to be evenly distributed across the heat exchanger tubes. The gases exit on the far side of the unit through a port the same size as that of the line carrying the supply of exhaust gas to the unit. The flow of exhaust gas would be increased if the exhaust port were larger.

A gate type valve was required at this exhaust port on the primary heat exchanger. The inside diameter of this valve had to be the same as that of the exhaust port. This would offer no restriction should the valve be opened completely. It was important to locate the valve on the exit side of the heat exchanger. The exhaust gases are up to 1,400 degrees F entering the heat exchanger. This temperature would break down the packing in most valves in a very short time. Most of the heat from the gases would be extracted by the exchanger tubes prior to reaching the valve if it were placed on the exhaust side of the exchanger. The gases exiting the unit should not exceed 250 degrees.

Once the unit was placed into the box it was welded air tight. When this was completed, the top of the unit (the tube carriage) was exposed. A plate or lid was cut, then placed over the carriage to seal in the tubes and the exhaust gases. This too was brazed or welded air tight.

What we had constructed was a unit within a unit. A sealed heat exchanger mounted inside the outer box.

Inside the tubes of the heat exchanger, screens were inserted. In each of the tubes, a piece of stainless steel or

aluminum screen the length of the tube and one and one-half inch wide, was rolled loosely, then slightly twisted, prior to being inserted into the tubes. A retainer screen was required at the rear of the tubes to keep the screens within the tubes from being sucked out by the vacuum created by normal engine operation. The screens inserted in the tubes were standard mesh, normally found in screen doors. A heavier more rigid screen or wire mesh was used for the retainer screen.

HOW AND WHERE TO EXTRACT THE EXHAUST GASES

The exhaust gases that are used to supply heat to the exchanger tubes were attained from the exhaust pipe, as close to the engine as possible. A hole with the same diameter as the exhaust gas supply line should be drilled in the exhaust pipe as close as possible to the engine. The hole into which we tapped the exhaust system was located *after* the cross-over pipe joins in. This was in a single exhaust vehicle with a V-8 engine. If the exhaust gases were extracted from one side only, there would be an uneven balance in the exhaust pressure to the engine. The engine would run very rough. If the vehicle was equipped with dual exhaust, exhaust gases were extracted from both sides evenly. On a straight four or six cylinder engine, there is no concern with this problem.

Once the hole was drilled, a nipple of that diameter was welded into place. From the nipple, a piece of flexible exhaust tubing was connected to the exchanger unit where there is another nipple. This tubing is available in many auto parts stores, is very workable, and once installed, becomes rigid with time.

DRAIN SUMP AND FUEL RETURN

As the fuel passes the nozzle and enters the airstream, some of the fuel will not pass through the tubes. Unused fuel will collect on the front plate of the primary heat exchanger and drain to collect in a puddle on the floor of the box below the nozzle. If this fuel is allowed to collect, it could become a hazard. For that reason the fuel is directed back to the fuel tank or to the intake side of the fuel pump. We had to be careful here since the unit was pressurized. Air pressure

could enter the return line, pumping air into either the fuel line or the fuel tank. Both are undesirable conditions. This could be avoided by placing a check valve in a drain sump at the bottom of the box just forward of the nozzle where the unvaporized fuel could collect. A tube, one inch in diameter and four inches long, was placed at the bottom of the box in this location. In the bottom of this tube is a needle and seat valve from a carburetor float bowl. A float, such as a cork, was attached to the needle valve. As the fuel level rises, the cork would rise, lifting the needle from the seat, thus draining the tube. Before the tube empties, the cork would drop, re-seating the valve. This would not allow any air pressure to escape the tube. (See Illustration #9)

HEAT EXCHANGER BOX INSTALLATION

When installing the heat exchanger box, we fitted the box onto the carburetor. The carburetor had a threaded rod that extended upward, normally securing the air filter onto the carburetor. A small hole was drilled in the top of the vaporizer box at a point exactly centered so the wing nut could secure the vaporizer box onto the carburetor in the same manner as the air filter. Doing this would pull the spacer under the box securely against the mouth of the carburetor. (See Illustration #10)

We placed a gasket between this spacer and the carburetor mouth to insure that there would be no vapor leaks. Using the wing nut to mount the box was not enough support for the box. The weight of the box, combined with the engine's vibration, would damage the gaskets in the carburetor in just a short time if some type of external bracing was not used. We welded several brackets to the box itself, then bolted them to the intake manifold until the unit was solidly mounted. We had to remember that the carburetor was only made of soft "pot" metal and did not offer any strength for support.

Drain Sump

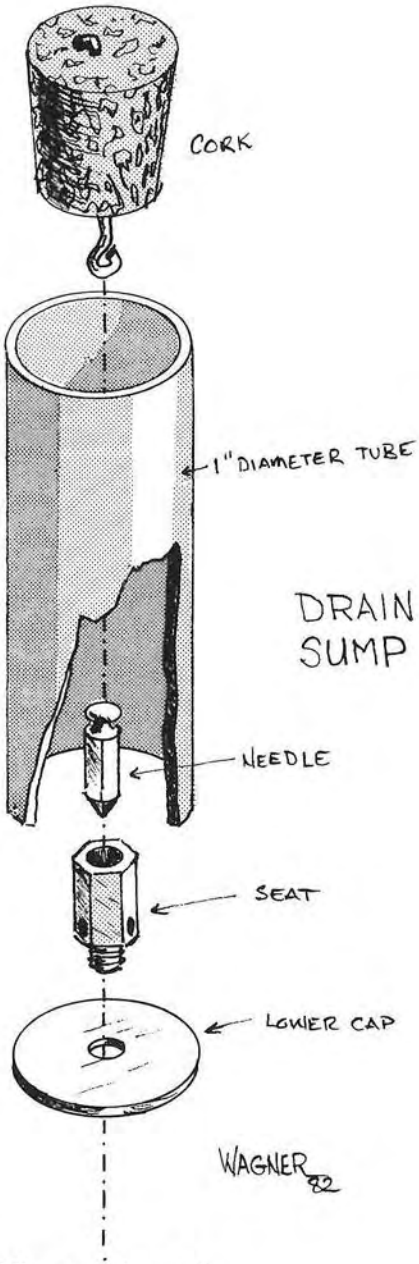

Illustration #9

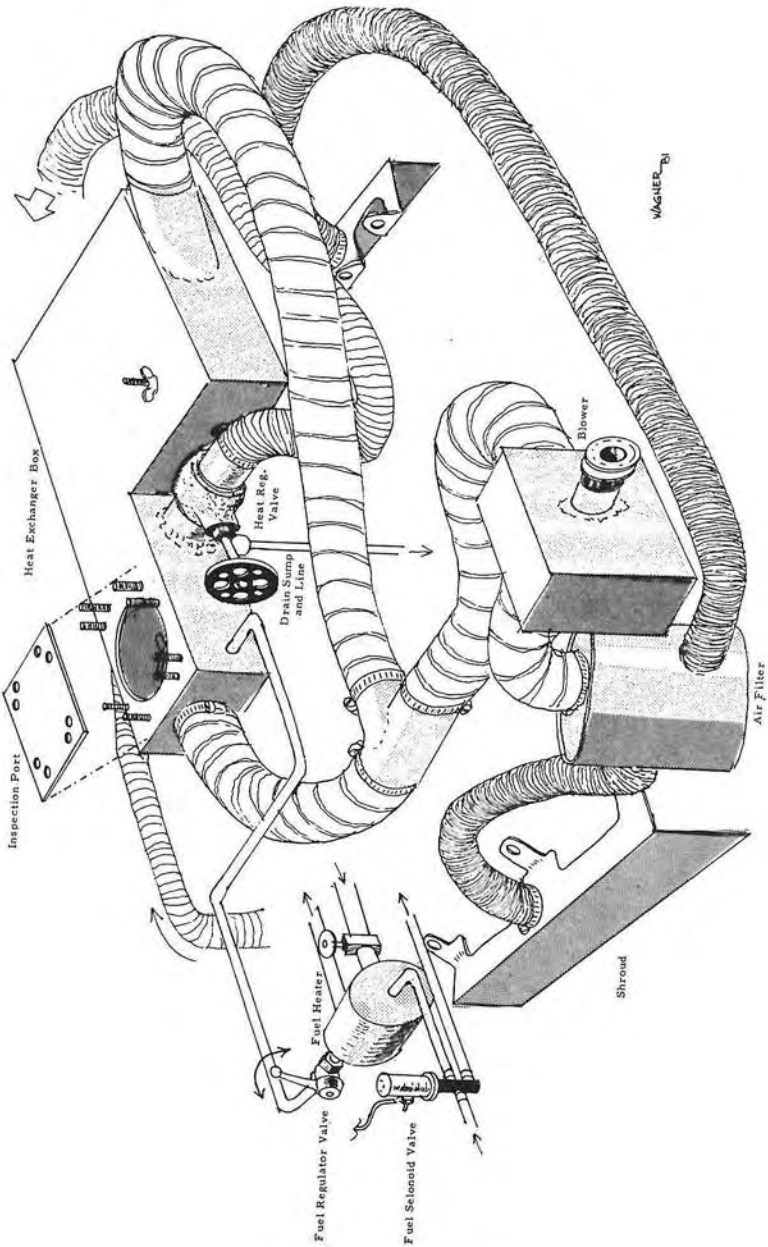

Illustration #10

Chapter 11
Water/Steam Injection

The useful concept of water injection is far from new. Prior to and during the Second World War, water injection was used to increase the power of aircraft during takeoff. It is still used, even in jet aircraft. As a matter of fact, the B-52 cannot get off of the ground fully loaded without water injection. You now see kits that you can purchase from your auto part dealers anywhere from $60 to $160 for converting your vehicle to water injection or water vapor injection. Your question would be, does it really work and if so, how and why?

If I am going to successfully explain the theory involved in this concept, I must first refresh your understanding of the operation of the internal combustion engine as far as its involvement with heat.

The gasoline that we use contains so much heat energy per volume, about 10,000 BTU's per cup. Unfortunately, due to our engine design, 85 percent of this heat energy is lost to the cooling system, exhaust, and to mechanical inefficiency. The purpose of the internal combustion engine is to convert this heat energy into torque. This is done by introducing gasoline to the cylinder along with enough air, (or oxygen) to support the combustion of this fuel. When the combustion takes place, what actually happens is, the fuel releases its heat energy which is accepted or conducted by the air and gaseous matter in the cylinder. Once these gases accept this heat they will expand to a certain degree. This supply of pressurized gas will exert its pressure on the piston surface, driving it downward in the power stroke or cycle. As explained in the earlier chapters of this book, the bulk of the fuel introduced to the cylinder does not have the opportunity to release its heat energy during this cycle due to the fact that it is not in a workable state (liquid).

Regardless of how much heat energy is being lost, there still remains a great amount of heat generated in the

cylinders by the combustion.

Steam has been greatly valued for centuries for its tendency to produce a useful pressure with relatively little heat. Steam will expand to a greater pressure than air if heated to a given temperature. Now, in our automobile engines, air is the primary gas to receive this heat from combustion. If steam is introduced, it will accept this heat and produce an overall higher pressure during the power cycle or stroke. Needless to say, if you have more power, you will use less gas.

Water injection has been commonly used to introduce this steam to the cylinders in the past. The greatest drawback is that the heat of combustion must first turn the water into steam before it will become useful. We have accumulated data that more or less indicates that water injection creates an average of from 5 percent to some reports of 50 percent increases in gas mileage. Generally, the people who install these systems claim that they have noticed an increase in power more than economy.

I would recommend steam injection over water injection by far. I have talked with a few who claim that too much steam or too rich a fuel mixture with steam injection will create so much extra power, that they have blown out their head gaskets. So be sparing! I have a newspaper clipping in my possession that tells of a man who claimed 106 mpg using steam injection alone. Maybe!

I have constructed my own water injection system for considerably less than you would pay for a premanufactured system of $160. I invested a total sum of $5. I used a milk jug, some vacuum line, an aquarium air regulator valve, and a filter. By running the vacuum line from the milk jug that had been secured to the fender to the air valve that was mounted on the dash, I was able to control the flow of water through the line from inside the car while I was driving. The vacuum line led from the air valve mounted on the dash, back out to the carburetor. So, the water was drawn out of the milk jug, through the vacuum line, through the regulator air valve, and into the venturi by the vacuum of the carburetor. I just used the most convenient vacuum line I could find to tie into. It works like a charm. I did find that allowing the engine to warm up prior to opening the regulator valve to introduce the flow of water

was certainly to my benefit.

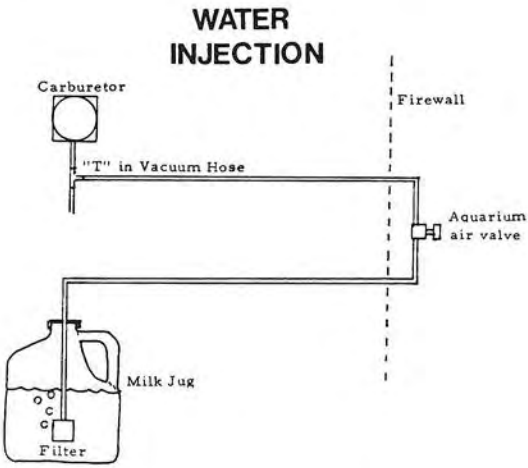

Personally, for the reasons stated in this chapter, I would rather tinker with steam over water, though, doing this involves a little more time and patience.

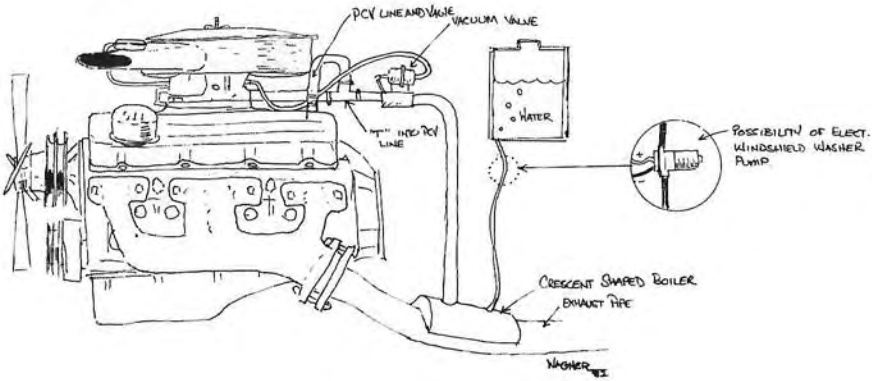

As you can see by this illustration, some welding is involved. A water tank can be easily enough acquired in the form of anything from a milk jug to a coffee can. This can, or tank, must be mounted high. The reason for this is that

the water will flow down a small tube into a homemade boiler. The distance between the holding tank and the boiler will determine what the weight of the water will be as it enters the boiler. This is important because the pressure or weight of the water as it drips into the boiler will help maintain a given pressure in the boiler.

A fairly low pressure in the boiler is required. The opening from this water supply tube should be around 1/16″ in diameter. For a greater amount of steam to be produced, a smaller opening would be required. The pressure of the boiler will also be directly affected by the amount of steam allowed to escape up into the carburetor. This boiler is simply another piece of pipe cut in half, with end caps welded on, welded onto the body of the exhaust pipe. It will need to be air tight.

As the water drips onto the exhaust pipe, it will turn to steam. This steam will travel upwards to a regulator valve. This valve can be acquired from a wrecking yard, previously used as a water flow valve in a heater system. Late '60 and early '70 model Fords are equipped with these vacuum operated valves. It is desirable to have a greater amount of steam in the engine for acceleration, therefore, when the intake manifold pressure drops, this valve should open allowing more steam to enter through the PCV inlet port located at the base of your carburetor.

This is a basic design for a steam injection system. You will undoubtedly need to tinker and adjust and use your own ingenuity to a certain degree to achieve the maximum results from this system.

* NOTE: When the engine is not operating, the flow of water from the tank must be stopped. Otherwise, the boiler will fill with water when the engine is off.

Chapter 12
The Simple System

This complex system was successful, but not to the degree that would satisfy us. It would compare to the old Pouge vaporizer. It worked when the adjustments and weather were just right. As I may have mentioned earlier, most persons who tried to build their own units using our work as a reference, generally did not attempt to build this unit. We could not guarantee the degree of their ability to duplicate our efforts, so therefore they were reluctant to invest the time and money required to assemble this unit. At the same time, with the design of this unit, we also developed a much simpler and easier to build system. This "simple" system, as we call it, has many of the same components as the complex just described. It has been quite popular in the Northwest area. People have built this type of system, from what we can determine, by the thousands. There are those who have not attained a sizable increase in mileage, but when we get a report back on those who have, generally these people who have succeeded have a list of others that have succeded also. It does seem that the quality of the installation and adjustment makes the greatest varience in the results. It seems that some vehicles are just not compatible with the simple system. I have tried, with very little success, to attain a sizable increase in four and six cyclinder engines. But the larger engines, as a rule, seem to be considerably more receptive. We do have quite a few reports of 100% increases in larger engined vehicles. (Illustration #11)

In the simple system, we were not aiming at vaporizing the fuel entirely before its consumption. What our goal was, was to encourage the vaporization of the gasoline in the intake manifold. This could be accomplished by pre-heating the fuel and air to be injected by the engine. The fuel is heated in the same fuel heater that we used in the complex

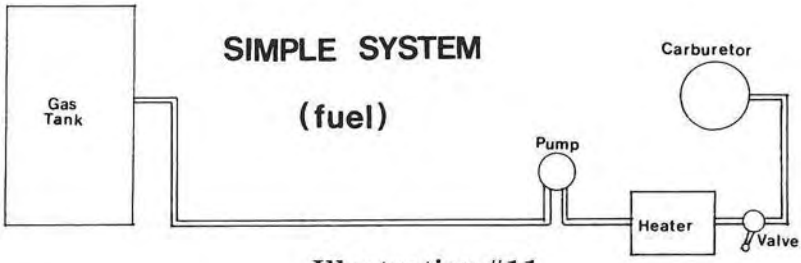

Illustration #11

system. A 6″ x 4″ diameter piece of tubing or pipe that is capped on both ends with a copper coil running through the center of it. The heat in the simple system is regulated by the same water valve that we used in the complex system also.

When setting this valve, rather than try to set it with a temperature guage, we set it by the engine's performance. With an unobstructed flow from the fuel pump to the carburetor, (with the exception of the fuel heater) we ran the engine up to operating temperature. We made sure that for this test that the supply of heated air was complete. The valve to the heater that controlled the water flow was completely open. If too much heat was being transferred to the fuel passing through the fuel heater because the valve was open too far, the heat would begin to create what is commonly referred to as "vapor lock." The lighter elements of the gasoline begin to turn into a gas vapor in the fuel line.

For this reason the fuel temperature must be regulated down to a safe temperature. It is not difficult to find the proper temperature. If too much heat is being transferred to the fuel, since the fuel in the simple system is still flowing into the carburetor bowl, the vehicle will lurch and sputter from these vapor bubbles. We simply take the vehicle out and find out where the engine runs its best at the greatest amount of heat that we can get away with without causing a loss of power or lurching as a result.

Once the fuel temperature has been set the only time that we have had to change it was seasonally. As the ambient temperature changes so does the temperature of the fuel the temperature of the in-coming heater. If there is a severe change in fuel then the temperature of the fuel existing in the fuel heater will vary accordingly. Another factor that has a bearing on the requirement to change the fuel

temperature setting seasonally is that the grade and composition of fuel changes seasonally. There exists what is referred to as seasonal gas. All oil companies, that I know of, sell seasonal gasoline.

THE SUPPLY OF HEATED AIR

The method that we use to supply the engine with heated air is to draw it from the outside of the exhaust manifolds. We have found that later model cars and trucks are already supplied with an exhaust manifold shroud and heat pick-up tube. We have found this to be ideal for this application. The only obstacle is the valve located in the air breather assembly. This, we discovered, must be removed to allow a total flow of hot air. The valve would shut off the heated air once the engine is heated if we did not do so. This shroud is fine and can be used on four and six cylinder engines, but we found that a V-8 engine has a larger demand for hot air and requires two of these shrouds. Since the car only comes with one, another shroud must be fabricated to incase the other exhaust manifold. This we constructed from a simple piece of drain gutter normally used on houses. We selected the part of the drain gutter that has a downspout fitting attached. This downspout fitting that protudes from the bottom of the section of the gutter is 2″ in diameter which is ideal for fitting on a section of 2″ flexible tubing to duct the heated air over to the mouth of the air cleaner. This tubing should be the type normally used to connect the exhaust manifold shroud of a newer car to the air cleaner neck. It is either made of an asbestos or aluminum material.

All INCOMING COLD AIR MUST BE COMPLETELY BLOCKED OFF! If the car has a four or six cylinder engine, and only one shroud is being used, the valve that shuts off the air flow is removed. We must then block off the mouth of the air cleaner to ensure that absolutely no cool air is drawn in through the air cleaner at all. If we are working with an eight cylinder, the mouth is fitted with a tube that is connected to the other homemade exhaust manifold shroud. We found that it is very important when installing a homemade shroud that it be firmly secured to the manifold by using the maifold bolts for attaching the shroud.

The hot air is urgently needed in building this system. We have tried to construct one of these simple systems without

it and found that if the air is not heated, there is little or no increase in mileage. The reason for this is that the air passing through the venturi is very cold, even in the summer. If you are a light aircraft pilot, you know that even on the warmest day when you throttle back for the descent that it is urgent to apply the carburetor heat to prevent icing. If the fuel has been heated, it has a much greater potential for providing energy output. If it is injected through the carburetor jets into a cold airstream, it will lose its heat and, therefore, its added energy potential. (See Illustration #12)

The simple system consists of a fuel heater, a water regulator valve, a fuel regulator valve, control linkage and the hot air pick-up, and shrouds. (See Illustration #13)

Many people have duplicated our efforts with this system with an amazing amount of success. Systems similar to this one have been used for generations. This system does not seem to work on all vehicles with the same degree of success. For this reason we found it necessary to either refine this system or the complex system to a more consistently performing unit. Or, possibly develop one that is more consistent than both.

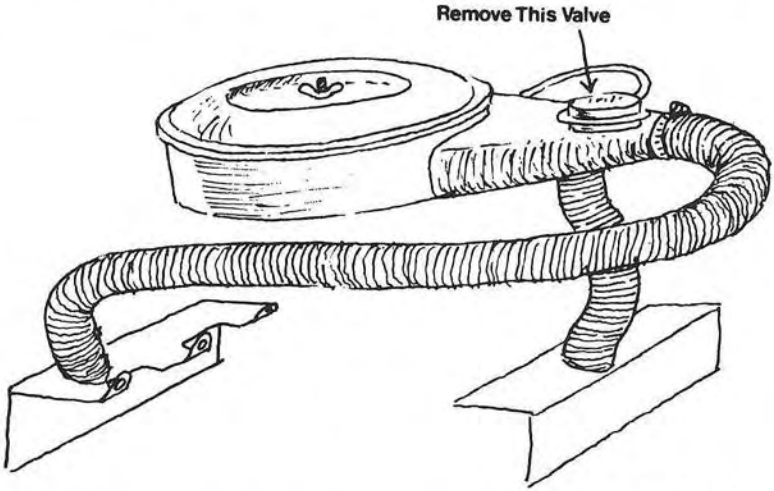

Illustration #12

Simple System Hot Air Pick-up

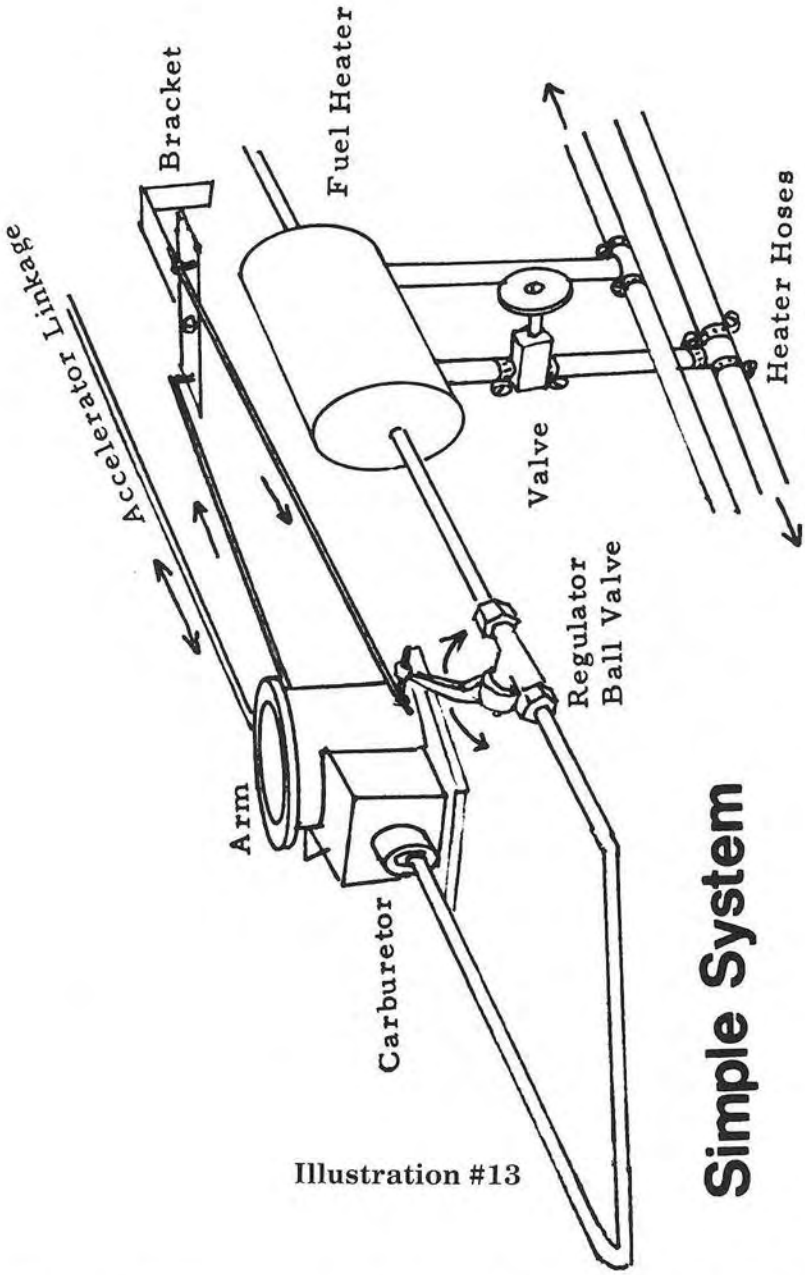

Illustration #13

Simple System

Parts of this system can be located mostly in auto parts stores and hardware stores. The following information is a

discription of the parts and an explanation of the qualities that they should possess.

1. **BALL VALVE:** We use a Ludecke 1/4″ ball valve. This valve is manufactured in Germany and is not that easy to locate. If you cannot locate one, the type of valve to serve this purpose should be a ball type valve. It must have an inside diameter of 1/4″. It must turn freely. A stiff valve just won't do for this application. This valve must also be compatible with gasoline. The Ludecke valve has teflon seals.
2. **COPPER FUEL LINE:** In order to wrap coils of the small diameter that is required, I soon learned that ordinary copper tubing from a hardware or auto parts store would not do. It was too stiff and would crimp rather than bend in small coils. I found that if I used refrigeration copper tubing, or "soft copper tubing," I could easily make some small perfect coils. Be sure to use the same diameter that the car came with.
3. **RUBBER FUEL LINE:** Generally available at auto parts stores.
4. **HIGH TEMPERATURE PLASTIC HOT WATER "T"s:** You may need to look at a few different stores before locating these. They will be in auto parts stores. They are designed to be inserted in the heater hoses and come in sizes for all heater hoses. The WATER REGULATOR VALVE will be found most likely in the same location. This valve is also designed to control the water flow through the heater hoses.
5. **FLEXIBLE 2″ ALUMINUM HOSING:** This hose was originally used on cars to connect the heat shroud on the exhaust manifold to the neck of the air cleaner. It will come in aluminum or black colored asbestos. Either will do.

Chapter 13
More Designing

I went back to the drawing board. In one of my seminars in Spokane, I had an individual who claimed to be an ex-engineer from Detroit. This man claimed that out on the test tracks after a new car was constructed, rather than use a conventional carburetor for the testing, they put on some type of carburetor that attained tremendous gas mileage. He said that after the testing was done, the carburetor would be removed and a conventional carburetor was put in its place. The point the man was making was that in Detroit they don't want to pay a dollar-fifty a gallon for fuel while testing all of these thousands of new cars on the track. He also stated that it was difficult to tell one of these test carburetors from a conventional carburetor by the outside appearance. If this is so, then I assumed that I was doing something terribly wrong.

My unit is large and bulky. What is it that they have done to condense the size of theirs? I knew with enough time, I could do the same.

By the way, this man's claims sounded reasonable to me. Have you ever heard stories about a man who went to Detroit to pick up his new car or truck that he had ordered? As the stories go, the guy picks it up and finds that it gets 75 or 80 miles to the gallon. I've heard plenty of these stories. Unfortunately, as soon as someone gets hold of one of these vehicles, the first thing he does is begin bragging to everyone who will listen about what kind of mileage he is getting. Soon afterward the company will come out and take the car back and give the individual another car. Ask someone you know if they have heard of one of these cases if you have not. I have two individuals who claim that this has happened to them here in Tacoma. Many more are unconfirmed reports. The story that the Detroit ex-engineer gave me would offer an explanation of these mysterious

carburetors. From what I have gathered, about one out of maybe a million cars in Detroit slips out with one of these test carburetors on them.

As far as our development is going in the pursuit of this smaller, more efficient carburetor, we are making great progress. As the situation stood, we needed to attain the required amount of heat to vaporize gasoline completely. There was the problem of carbon deposits. As I stated earlier, the gasoline being sold now is more difficult to vaporize. More sludge and deposits accumulate on the heating apparatus. This means that in most vaporizers, periodical cleaning is required.

I developed a unit that would not have this probelm, which is a catalyst. In other words, a portable cat cracker. Many factors were considered in the design of this unit. One was how to expose the fuel safely to great amounts of heat and not risk ignition. Getting back to the basic understanding of fuel, any fuel needs oxygen to burn. The solution to the problem was to generate the vapor in a chamber that contained no oxygen, or even air. This could be done in a vacuum, but that is not practical. The exhaust gases will produce mostly pure carbon dioxide if the car is running on vapor. What we needed was a source of heat that would not present the problem of accumulating carbon deposits. I will not get into the method at which I developed the solution, but I will explain what the solution was. A catalytic converter on a car was explained in the earlier part of this book. A limited amount of air is pumped into the exhaust gases for the purpose of burning off the excess unburned fuel in this holding chamber. This chamber is filled with porcelain beads that are slightly agitated against each other and retain the heat that they are exposed to, therefore, keeping themselves clean and exposing the incoming gases to additional heat. This also causes the gases to be cleansed by the heat.

So, if the fuel was introduced into a small stream of exhaust gas and then passed through a chamber full of porcelain this would be a start. What about heat for this chamber. It would be desirable to heat this chamber to a consistent 900 degrees. By doing this it would allow the gasoline passing through the chamber to be vaporized. I

decided to heat the chamber by burning a small amount of the fuel itself. The question was, how could I burn a select amount of carbon dioxide; nothing will or can ignite the gasoline mixture in the chamber - even to the slightest degree. But, if I introduced a very small amount of air into the CO_2/air mixture I could support a limited amount of burning. The smaller the supply of air, the smaller the amount of burning. By passing a certain amount of CO_2 exhaust gas through a vacuum type fuel jet right after the fuel mixes, introduce a regulated amount of air, then igniting the mixture with a spark. I could obtain about any temperature that I would desire in the catalyst chamber. (See Illustration #14)

By using a small supply of pressurized air and then regulating the flow of this air into the fuel jet, a constant desired temperature could be maintained. This is considering that the air flow would vary in relationship to the amount of fuel being introduced.

This is possible by placing a temperature probe in the chamber to send out an electrical impulse to a regulator valve placed in the air supply line to either increase or decrease the air flow to maintain the 900 degree temperature. At the rear side of this catalyst, pure gasoline vapor will exit in a stream of CO_2. This mixture will be completely neutral and non-explosive until introduced into the air. The mixture in our test vehicle was introduced to the engine through the PCV line opening at the base of the carburetor. If it is a safe supply of pure gas vapor that you desire, this unit will produce it. On top of being able to do this, it also cleans itself.

As can be seen in the Illustration, the flow of exhaust gases through the fuel jet will determine how much fuel will be drawn from the jet. The flow of exhaust gases is determined by the butterfly valve at the entrance of the unit. This flow or butterfly valve setting will be controlled by the accelerator pedal pressure. The conventional carburetor is left intact. While the catalyst is powering the vehicle, the conventional carburetor is inactive. The only function it will perform will be the regulation of how much air will enter the intake manifold. The fuel flow, and regulation, will be controlled by the butterfly valve in the catalyst unit.

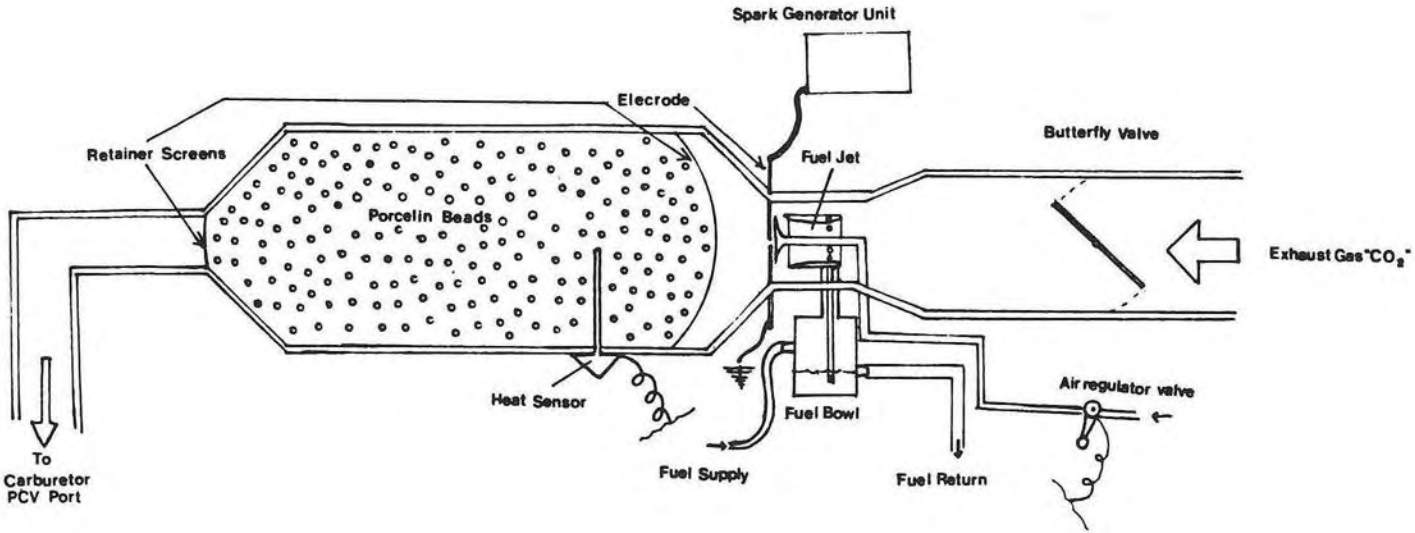

Illustration #14

Linkage that controls the catalyst valve will be directly connected to the carburetor linkage. The fuel flow will be proportional to the air flow.

Immediately after the exhaust gas passes the fuel jet, there is a tube that runs through the center of the jet that opens up into a flange. The fuel will turbulently collect behind this flange due to the lower pressure behind it. The air supply, which is moving at a much slower speed and pressure than the exhaust gas, will be exiting this flange.

The result will be a fuel/air mixture at this point with most of the CO_2 exhaust gas passing by this pocket of fuel/air. The fuel/air mixture is ignited by the electrodes located at this flange. The mixture will be snuffed out almost immediately by the exhaust gases. As soon as the burning fuel/air mixture hits the outer stream of exhaust gas, it will be dissipated into a non-combustible mixture. The limited amount of burning that did exist will spread heat throughout the chamber. The porcelain beads will then absorb and retain this heat and transfer it back to the unvaporized fuel passing through the chamber.

There was only one problem to be solved at this time. It is apparent that the car will not start when cold with the catalyst. The exhaust gases, prior to the car starting, will contain no CO_2 due to the fact that the engine has not been in operation. The problem presented would be that until the engine was operational and producing CO_2, the unburned fuel and air being pushed through the exhaust pipe would pass through the catalyst. If the spark igniter succeeded in igniting this mixture, the safety of the unit would be endangered due to a purely explosive mixture passing through it.

What we did to eliminate this danger was to install a heat sensor. The type required sends out a signal to the idiot light in the car when the engine heat exceeds 190 to 200 degrees in the catalyst on the exhaust side. When the exhaust side gained over 200 degrees of heat, it would send out an electrical current that would turn on the spark igniter. How was the car going to warm up in the first place to attain the 200 degree temperature for the exhaust gas. We placed a cold start valve in the intake manifold. A vacuum sensor was also tied into the vacuum lines on the car. This sensor detected a drop in vacuum below about 10 inches. If there is

under 10 inches of vacuum, the sensor sends out a current which actuated the cold start nozzle. Once the intake manifold pressure dropped below 10 inches, the sensor would break the current. So, when accelerating, this set-up also serves as an accelerator pump on top of serving as a cold start nozzle.

We have been amazed at the amount of success that we have attained with this unit in our testing so far. The system is still under development and this discription has indicated our development to this point. As a matter of fact, this publication of the catalyst is the first documentation that we have released to the public. It looks so good to us that it makes us very nervous to be the only ones holding the plans to it. It does seem that the good systems and inventors seem to disappear the quickest.

We are considered to be unwise by some for disclosing all of our information to the public rather than holding it in complete secrecy. It is our opinion that is we had kept our information to ourselves, we wouldn't have been hard to stop. This way, the public is now armed with the technological capacity to reproduce our efforts. We are hoping to leave plans of fuel saving devices behind to flood out of the woodwork all over the country. If this happens, maybe one person can be stopped, but they can't stop us all.

We don't claim to have perfected any of these systems, but we have proven to ourselves and others that it is possible to attain a greatly sizable increase in gas mileage. Proving that we are not getting from Detroit and the Federal Government what we should be. If you prove this to yourself and neighbors, we are convinced that you will do everything in your power to see that the situation gets righted.

If, by some chance, you still don't believe that there not only is an organized and long standing effort to keep us dependent on oil, but great amounts of it, consider this:

A full-sized diesel rig, a Peterbilt for example, hauling a 70,000 pound gross weight can attain up to 7 miles to the gallon on the highway. The average car weighs around 3,000 pounds and attains maybe 10 to 20 miles to the gallon. There isn't a great difference between the mileage of the two. According to simple logic, if the truck weighs 70,000 pounds and the car weighs 3,000 pounds, then the car

weighs 23.3 times less than the truck. So, if the truck gets 7 m.p.g. on the highway, then the car should get about 23.3 times that, or 163 miles to the gallon. It is a fact that these trucks are utility vehicles. Our country depends on the economy of their operation, so therefore, apparently, the government and Detroit have made exceptions for them. They seem to have allowed the trucks to attain a much greater efficiency than the American automobile has been attaining. People are not blind, they saw this tremendous difference in economical utilization of fuel and began demanding of Detroit to produce Diesel automobiles. With seemingly reluctance, they finally gave them to us. For some reason, however, they did not produce the kind of proportional increase that was expected by the public. It seems that all they did was convert conventional gasoline engines to only operate off diesel fuel. The fuel is not utilized in the same manner that it is on the trucks. They got us again!

Here is another factor that you might take into consideration. The soft tires that are monopolizing the industry, rob you of economy and power in more ways than you can comprehend. Picture the difference of how easy an English racer bicycle is to ride at less use of your strength, opposed to a standard bicycle with the large soft tires. The more weight that is put on the bike with the soft tires, the harder it is to pedal and the quicker it will slow down. If the tire has "give" it will create drag. The Viking project was a car built by a Washington university recently. They constructed a lightweight car with solid tires using a Volkswagon Rabbit engine. The car attained 80 miles to the gallon. In some reports, I heard of as high as 90 miles to the gallon.

A soft rubber inflated tire on your car is like driving a bicycle through mud. If your tires were solid rubber, your economy would increase tremendously, even leaving your carburetor operating as inefficiently as it does. The comfort of the ride could be replaced by improving the suspension or by inserting the steel part of the wheel with a small amount of spring to absorb severe bumps. Steel belted radials increase mileage noticably. They are slightly more rigid than standard tires. It is still obvious from just looking at them just how little that they have.

You still cannot convince me that Detroit is not aware of this. Look again at the efficiency of diesel rigs. Did you know that their tire pressure is from 90 to 125 pounds per square inch? This is another reason for their increased mileage.

I believe that between NASA and Detroit they must have technology which not only could inexpensively reduce gasoline consumption, but replace it with an alternative. Who restricts their freedom to utilize this technology. If there is an attempt to keep this book off the market, you can bet it will be the same people! If propaganda comes out discrediting the information in this book, all I can advise is for you to form your own opinion. If you believe in it, do what you can to help. We can beat this together but not as individuals. I encourage you to share your knowledge of this book and its contents with your friends, relatives, and civic organizations. Tell people of the new knowledge that you have gained and together you can find a way of making a contribution to this effort.

If anything should happen to any of us at Carburetion Technology Enterprises, I hope that it will be investigated and not forgotten.

Thank you and good luck in your efforts,
Larry D. Wagner/Pres. of C.T.E.

CREDITS

At this time, I would like to express my thanks to all who have been supportive and helpful to our efforts at C.T.E. up to this point.

In particular, I would like to thank the National Car Drivers Association and the director, James Jackson, for their support and the reference information that we have used in the writing of this book.

I would like to thank my partner, Billy J. Seay, who has been patient and supportive in these years of struggling.

I would also like to thank our primary assembly and test mechanic, Joe Benedetto, who has worked with the minimum of materials and equipment, at times with no pay, for his determination and trust.

Finally, I would like to offer a sincere thanks for those of you who have volunteered time and materials with no obligation, to see that this effort was to succeed. Without you, chances are, we could not have continued.

Sincerely,
Larry D. Wagner

P.S. I would encourage anyone to investigate the possibility of becoming a member of the N.C.D.A.

Inquiries can be made at: P.O. Box 1111
Tacoma, Washington 98401

This book is a publication of Carburetion Technology Enterprises.

We began our interest in the field of gasoline vaporization three years ago with the naive attitude that this was a free enough country to manufacture any product that might help the economy.

It did not take us long to learn that if a product threatens the profits generated by a large monopoly, it's chances of reaching the market place here or in any other country are quite small.

Who exactly is responsible for the fact that although other technologies have advanced in such great strides, such as the electronics and aviation fields, the automobile engine has not significantly changed in over three generations.

Why is it that Einstien claimed that one cup of gas could heat a home for 100 years, yet fuel is still so grossly wasted?

Read this inventor's answers to these questions and learn what you can do to help.

This book may not be available to the public for long — if it ever does make it to the market READ IT NOW!