Appendix

TABLE OF WIRE SIZES:

The wire sizes specified for use in some designs are American Wire Gauge so a comparison table showing the UK Standard Wire Gauge (with lengths on a 500 gram reel of enamelled copper wire), and the American Wire Gauge is given here:

AWG	Dia mm	Area sq. mm	SWG	Dia mm	Area sq. mm	Max Amps	Ohms / metre	Metres Per 500g	Max Hz
1	7.35	42.40	2	7.01	38.60	119			325
2	6.54	33.60	3	6.40	32.18	94			410
3	5.88	27.15	4	5.89	27.27	75			500
4	5.19	21.20	6	4.88	18.68	60			650
5	4.62	16.80	7	4.47	15.70	47			810
6	4.11	13.30	8	4.06	12.97	37			1,100
7	3.67	10.60	9	3.66	10.51	30			1,300
8	3.26	8.35	10	3.25	8.30	24			1,650
9	2.91	6.62	11	2.95	6.82	19			2,050
10	2.59	5.27	12	2.64	5.48	15	0.0042		2,600
11	2.30	4.15	13	2.34	4.29	12	0.0047		3,200
12	2.05	3.31	14	2.03	3.49	9.3	0.0053	17.5 m	4,150
13	1.83	2.63	15	1.83	2.63	7.4	0.0068		5,300
14	1.63	2.08	16	1.63	2.08	5.9	0.0083	27 m	6,700
15	1.45	1.65	17	1.42	1.59	4.7	0.0135		8,250
16	1.29	1.31	18	1.219	1.17	3.7	0.0148	48 m	11 kHz
17	1.15	1.04				2.9	0.0214		13 kHz
18	1.024	0.823	19	1.016	0.811	2.3	0.027		17 kHz
19	0.912	0.653	20	0.914	0.657	1.8	0.026	85 m	21 kHz
20	0.812	0.519	21	0.813	0.519	1.5	0.036		27 kHz
21	0.723	0.412	22	0.711	0.397	1.2	0.043	140 m	33 kHz
22	0.644	0.325	23	0.610	0.292	0.92	0.056		42 kHz
23	0.573	0.259	24	0.559	0.245	0.729	0.070	225 m	53 kHz
24	0.511	0.205	25	0.508	0.203	0.577	0.087		68 kHz
25	0.455	0.163	26	0.457	0.164	0.457	0.105	340 m	85 kHz
26	0.405	0.128	27	0.417	0.136	0.361	0.130		107 kHz
27	0.361	0.102	28	0.376	0.111	0.288	0.155	500 m	130 kHz
28	0.321	0.0804	30	0.315	0.0779	0.226	0.221	700 m	170 kHz
29	0.286	0.0646	32	0.274	0.0591	0.182	0.292	950 m	210 kHz
30	0.255	0.0503	33	0.254	0.0506	0.142	0.347	1125 m	270 kHz
31	0.226	0.0401	34	0.234	0.0428	0.113	0.402	1300 m	340 kHz
32	0.203	0.0324	36	0.193	0.0293	0.091	0.589	1900 m	430 kHz
33	0.180	0.0255	37	0.173	0.0234	0.072	0.767	2450 m	540 kHz
34	0.160	0.0201	38	0.152	0.0182	0.056	0.945	3000 m	690 kHz
35	0.142	0.0159	39	0.132	0.0137	0.044	1.212	3700 m	870 kHz

Patent US 6,867,514 B2 **15th March 2005** **Inventor: Frank J. Fecera**

PERMANENT MAGNET MOTOR

This patent application shows the details of a permanent magnet motor. It should be noted that while in this text, Frank states that permanent magnets store a finite amount of magnetism, in actual fact, the magnet poles form a dipole which causes a continuous flow of energy drawn from the quantum foam of our universe, and that flow continues until such time as the dipole is destroyed. The energy which powers any permanent magnet motor comes directly from the zero-point energy field and not actually from the magnet itself. A piece of iron can be converted into a magnet by a single nanosecond magnetic pulse. It makes no sense that a pulse of that duration could provide months of continuous power from anything stored in the magnet itself, but it makes perfect sense if that brief pulse created a magnetic dipole which acts as a gateway for the inflow of zero-point energy from the environment.

ABSTRACT

A motor providing unidirectional rotational motive power is provided. The motor has a generally circular stator with a stator axis, an outer surface, and a circumferential line of demarcation at about a midpoint of the outer surface. The motor also includes one or more stator magnets attached to the outer surface of the stator. The stator magnets are arranged in a generally circular arrangement about the stator axis and generate a first magnetic field. An armature is attached to the stator so that it rotates with it, the armature having an axis parallel to the stator axis. One or more rotors, are spaced from the armature and coupled to it by an axle to allow each rotor to rotate around an axis, each rotor rotating in a plane generally aligned with the axis of the armature. Each rotor includes one or more rotor magnets, with each rotor magnet generating a second magnetic field. The second magnetic field generated by each rotor magnet interacts with the first magnetic field, to cause each rotor to rotate about the rotor axis. A linkage assembly drive connects each rotor to the stator to cause the armature to rotate about the armature axis thereby providing the unidirectional rotational motive power of the motor.

BACKGROUND OF THE INVENTION

This invention relates to dynamo electric motor structures and more particularly to rotary and linear permanent magnet motors. Conventional electric motors rely on the interaction of magnetic fields to produce a force which results in either rotary or linear motion. The magnetic fields in conventional electric motors providing rotary power, are generated by passing an externally provided electric current through conductors in either a stator (i.e. stationary portion of the motor), a rotor (i.e. rotary portion) or both the stator and the rotor. The rotary power of the motor arises from a rotating magnetic field which is created by commutating the electric current, either by a switching the current through different conductors, as in a direct current motor or by a polarity reversal of the electric current as in an alternating current motor.

It is well known that a class of materials known as ferromagnetic materials are also capable of generating a magnetic field having once been energised. Ferromagnetic materials with high coercivity are known as permanent magnets. Permanent magnets are capable of storing a finite amount of energy and retaining the ability to generate a substantial magnetic field until the stored energy is depleted.

There are electric motors which use permanent magnets in either the stator portion of the motor or the rotor portion of the motor. These motors achieve a small size for the amount of power delivered by the motor because the motors avoid having current carrying conductors to produce the magnetic field which is otherwise produced by the permanent magnets. However, these conventional permanent magnet motors still require a source of external power to produce a rotating magnetic field.

There have also been developed permanent magnet motors which use permanent magnets for both the stator and the rotor. For example, U.S. Pat. No. 4,598,221 discloses a permanent magnet motor which relies on an external source of power to rotate the magnetic fields of a rotor by ninety degrees with respect to the interacting stator magnetic fields to eliminate the counterproductive magnetic repulsion and attraction between the rotor and the stator magnets. In another example, U.S. Pat. No. 4,882,509 discloses a permanent magnet motor which relies on an external source of power to position a shield which does not permit coupling between the rotor and the stator magnets at times when attraction or repulsion would drag down the strength of the motor.

There are many instances where a motor action is required and no source of external power is available. Accordingly, a motor which relies solely on the energy stored in permanent magnets would be useful.

BRIEF SUMMARY OF THE INVENTION

Briefly stated, the present invention comprises a rotor for use in a permanent magnet motor and for providing motive power by rotation of the rotor about a rotor axis. The rotor comprises at least one first U-shaped magnet having a rear side and generating a first magnetic field. The rotation of the rotor about the rotor axis is caused by an interaction of a portion of the first magnetic field directly adjacent to the rear of the at least one U-shaped magnet with a stationary second magnetic field.

Another aspect of the present invention comprises a rotor providing motive power by a rotation of the rotor about the rotor axis and by a translation of the rotor in a direction of the rotor axis. The rotor comprises: a first U-shaped magnet having a north pole, a south pole and a rear side, the first U-shaped magnet generating a first magnetic field; a second U-shaped magnet having a north pole and a south pole, the south pole of the second U-shaped magnet abutting the north pole of the first U-shaped magnet; and a third U-shaped magnet having a north pole and a south pole, the north pole of the third U-shaped magnet abutting the south pole of the first U-shaped magnet. A portion of the first magnetic field generated by the first U-shaped magnet directly adjacent to the rear of the first U-shaped magnet interacts with a stationary fourth magnetic field to cause the rotor to rotate. A second magnetic field generated by the north pole of the second U-shaped magnet and a third magnetic field generated by the south pole of the third U-shaped magnet interact with the fourth magnetic field to cause the rotor to translate in the direction of the rotor axis.

A further aspect of the present invention comprises a rotor including a rotor axis, and a thruster axis in a plane of the rotor and intersecting the rotor axis. The rotor provides motive power by a rotation of the rotor about the rotor axis and by a translation of the rotor in a direction of the rotor axis. The rotor comprises: a first U-shaped magnet having a north pole and a south pole and a rear side, the north pole and the south pole being generally aligned with the thruster axis, the first U-shaped magnet generating a first magnetic field; a first thruster magnet having a direction of magnetisation generally aligned with the thruster magnet axis, the first thruster magnet being proximate to and spaced from the north pole of the first U-shaped magnet; and a second thruster magnet having a direction of magnetisation generally aligned with the thruster magnet axis, the second thruster magnet being near to and spaced from the south pole of the first U-shaped magnet, the first U-shaped magnet being interposed between the first and the second thruster magnets. A portion of the first magnetic field generated by the first U-shaped magnet directly adjacent to the rear side of the first U-shaped magnet interacts with a stationary fourth magnetic field to cause the rotor to rotate, a second magnetic field generated by the first thruster magnet and a third magnetic field generated by the second thruster magnet respectively interact with a stationary fifth magnetic field to cause the rotor to translate in the direction of the rotor axis.

Another aspect of the present invention comprises a rotor providing motive power by rotation of the rotor about a rotor axis and translation of the rotor in the direction of the rotor axis. The rotor has at least one rotor magnet generating a first magnetic field, the first magnetic field being generated by the rotor magnet interacting with at least one stationary U-shaped magnet, the U-shaped magnet having a rear side and generating a second magnetic field. The rotational and translational motive power of the rotor is provided by an interaction of a portion of the second magnetic field directly adjacent to the rear of the U-shaped magnet with the first magnetic field.

A further aspect of the present invention comprises a motor providing unidirectional rotational motive power. The motor includes a generally circular stator having a stator axis, an outer surface, and a circumferential line of demarcation at about a midpoint of the outer surface; at least one stator magnet attached to the outer surface of the stator, the at least one stator magnet being arranged in a generally circular arrangement about the stator axis and generating a first magnetic field; an armature attached to the stator for rotation with it; the armature having an axis parallel to the stator axis; at least one rotor, the rotor being spaced from the armature and coupled to it by an axle to allow rotation about an axis of the rotor, the rotor rotating in a plane generally aligned with the armature axis, the rotor, including at least one magnet generating a second magnetic field, where the second magnetic field generated by the rotor magnet interacts with the first magnetic field to cause the rotor to rotate about it's axis; and a drive linkage assembly connecting the rotor to the stator to cause the armature to rotate about it's axis as the rotor rotates about it's axis, thereby providing the unidirectional rotational motive power of the motor.

In another aspect, the present invention is directed to a motor providing unidirectional rotational motive power comprising: a generally circular stator having an axis, an outer surface, and a circumferential line of demarcation around the outer surface, the line of demarcation having a pre-determined direction around the stator axis and separating a first side of the outer surface and a second side of the outer surface, wherein at least one pair of stator magnets is attached to the outer surface generating a first magnetic field, the pair of magnets comprising a first stator magnet having a north pole and a south pole and a second stator magnet having a north pole and a south pole, the south pole of the first stator magnet being located on the first side of the outer surface and the north pole of the first stator magnet being closest to the line of demarcation, the north pole of the second stator magnet being located on the second side of the outer surface and the south pole of the second stator magnet being closest to the line of demarcation, wherein the at least one pair of stator magnets is spaced along the line of demarcation so that a first inter-magnet distance measured along the line of demarcation between the north pole of the first stator magnet and the south pole of the second stator magnet of an adjacent pair of the at least one pair of stator magnets is generally equal to a second inter-magnet distance measured along the line of demarcation between the south pole of the first stator magnet and the north pole of the second stator magnet; an armature attached to the stator, the armature having an axis parallel to the stator axis and attached to the stator for rotation therewith; and at least one rotor attached to the armature, the at least one rotor being spaced from the armature and coupled to it by an axle for rotation about an axis of the rotor, the rotor rotating in a plane generally aligned with the armature axis, the rotor comprising at least one rotor magnet, the rotor magnet generating a second magnetic field which interacts with the first magnetic field to cause the rotor to rotationally oscillate about the axis of the rotor and to generate a force in a direction of the rotor axis, thereby causing the armature to rotate in the pre-determined direction around the armature axis to provide the unidirectional rotational motive power of the motor.

In a further aspect, the present invention is directed to a motor providing unidirectional linear motive power comprising: a linear stator having a generally curved cross-section and a longitudinal line of demarcation perpendicular to the cross-section extending on about a midpoint of a surface of the stator between a first end and a second end of the stator, the stator including at least one magnet arranged between the first end and the second end, the magnet having a direction of magnetisation at about a right angle to the line of demarcation and generating a first magnetic field, the magnitude of the first magnetic field being generally uniform along the line of demarcation except in a pre-determined number of null regions, wherein the first magnetic field is substantially zero a rail connected to the stator, the rail having a longitudinal axis generally parallel to the line of demarcation and a helical groove with a pre-determined pitch running around a periphery of the rail; at least one rotor having a rotor axis aligned with the axis of the rail, the rotor being connected to the rail so that the rotor is free to rotate about the axis of the rail and slide along the rail, the rotor including at least one U-shaped magnet having a rear side and generating a second magnetic field, where a portion of the second magnetic field directly adjacent to the rear of the U-shaped magnet interacts with the first magnetic field to cause the rotor to rotate about the axis of the rail; a bearing assembly connecting the rotor to the helical groove, the bearing assembly converting the rotary motion of the rotor about the axis of the rail to linear motion along the rail; and a cross-link connecting the bearing assembly of a first rotor to a second rotor, thereby adding together the linear motion along the rail of the first rotor and the second rotor to provide the unidirectional linear motive power.

In yet another aspect, the present invention is directed to a motor providing unidirectional motive power comprising: a rail having a longitudinal axis and at least one helical groove having a pre-determined pitch running around a periphery of the rail; at least one first helical stator concentrically surrounding the rail, the first helical stator having the pre-determined pitch of the groove and a longitudinal axis generally parallel to the axis of the rail, at least one first stator magnet being attached to the first helical stator, the first stator magnet generating a first magnetic field; at least one rotor having an axis generally aligned with the axis of the rail, the rotor being connected to the rail so that the rotor is free to rotate about the axis of the rail and slide along the rail, the rotor comprising at least one rotor magnet generating a second magnetic field, the second magnetic field interacting with the first magnetic field generated by the first stator magnet to cause the rotor to rotate about the axis of the rail; and a bearing assembly connecting the rotor to the helical groove around the periphery of the rail, the bearing assembly converting the rotational motion of the rotor about the rail to unidirectional linear motion along the rail.

A further aspect of the present invention is directed to a motor providing unidirectional motive force comprising: a rail having a longitudinal axis and a helical groove running around the rail, the groove having a predetermined pitch; at least one first helical stator comprising a plurality of discontinuous spaced apart first ribs, each first rib partially surrounding the rail at a generally uniform distance from the rail, the first helical stator having the pre-determined pitch of the groove and a longitudinal axis generally aligned with the rail, at least one first stator magnet being attached to each rib, each first stator magnet generating a first magnetic field; at least one rotor having an axis generally aligned with the axis of the rail, the rotor being connected to the rail so that the rotor is free to rotate about the axis of the rail and to slide along the rail, the rotor comprising at least one rotor magnet generating a second magnetic field, the second magnetic field interacting with the first magnetic field generated by the first stator magnet to cause the rotor to rotate about the axis of the rail; and a bearing assembly connecting the rotor to the helical groove around the rail, the bearing assembly converting the rotary motion of the rotor about the rail to linear motion along the rail.

The present invention is further directed to a motor providing unidirectional motive power comprising: a rail having a longitudinal axis and a generally sinusoidal groove running around a periphery of the rail, the sinusoidal groove having a pre-determined period; at least one stator having a generally curved cross-section and a longitudinal line of demarcation perpendicular to the cross-section located at about a midpoint of a surface of the stator, the surface of the stator being disposed generally equidistant from and parallel to the axis of the rail; at least one stator magnet attached to the surface of the stator generating a first magnetic field, the stator magnet having a magnetisation which is displaced sinusoidally from the line of demarcation, the sinusoid having a pre-determined period and a pre-determined maximum amplitude and being divided into a plurality of alternating first and second sectors, with a boundary between the alternating first and second sectors occurring at the maximum amplitude of the sinusoid, the direction of magnetisation of the stator magnet being opposite in direction in the first and second segments; at least one rotor having an axis aligned with the axis of the rail, the rotor being connected to the rail so that the rotor is free to rotate about the axis of the rail and slide along the rail, the rotor including at least one U-shaped magnet having a rear side and generating a second magnetic field, the U-shaped magnet being positioned on the rotor so that the rear side of the U-shaped magnet is apposite to the first and the second segments of the stator as the rotor rotates about the rotor axis, wherein an interaction of a portion of the second magnetic field directly adjacent to the rear of the U-shaped magnet with the first magnetic field causes the rotor to rotationally oscillate about the axis of the rail; and a bearing assembly connecting the rotor to the sinusoidal groove around the rail, the bearing assembly converting the oscillatory motion of the rotor about the rail to unidirectional linear motion along the rail.

The present invention is also directed to a motor providing unidirectional motive power comprising: a rail having a longitudinal axis and a helical groove running around a periphery of the rail, the helical groove having a pre-determined pitch; at least one stator having a generally having a longitudinal line of demarcation located at about a midpoint of a surface of the stator, the surface of the stator being disposed generally equidistant from and parallel to the axis of the rail; at least one stator magnet attached to the surface of the stator, the stator magnet having a direction of magnetisation which rotates about a magnetic axis parallel to the line of demarcation with a predetermined pitch, thereby generating a first magnetic field having a substantially uniform magnitude along the magnetic axis and rotates around the magnetic axis with the pre-determined pitch of the stator magnet rotation; at least one rotor having an axis aligned with the axis of the rail, the rotor being connected to the rail so that the rotor is free to rotate about the axis of the rail and slide along the rail, the rotor including at least one U-shaped magnet generating a second magnetic field, the U-shaped magnet being positioned on the rotor so that a portion of the second magnetic field directly adjacent to the rear side of the U-shaped magnet interacts with the first magnetic field of the stator magnet to cause the rotor to rotate about it's axis; and a bearing assembly connecting the rotor to the helical groove, the bearing assembly converting the rotary motion of the rotor about the rail to unidirectional linear motion along the rail.

BRIEF DESCRIPTION OF THE SEVERAL VIEWS OF THE DRAWINGS

The foregoing summary, as well as the following detailed description of preferred embodiments of the invention, will be better understood when read in conjunction with the appended drawings. For the purpose of illustrating the invention, there are shown in the drawings embodiments which are presently preferred. It should be understood, however, that the invention is not limited to the precise arrangements and instrumentalities shown. In the drawings:

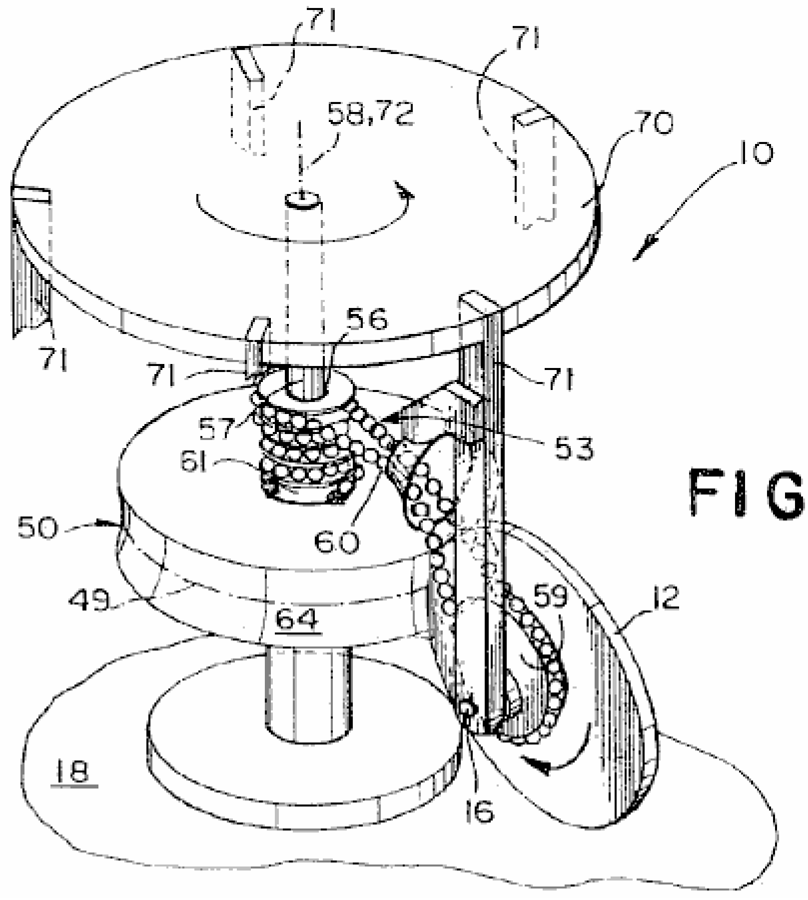

FIG.1A

Fig.1A is a schematic perspective drawing of a first preferred embodiment of a motor providing unidirectional motive power;

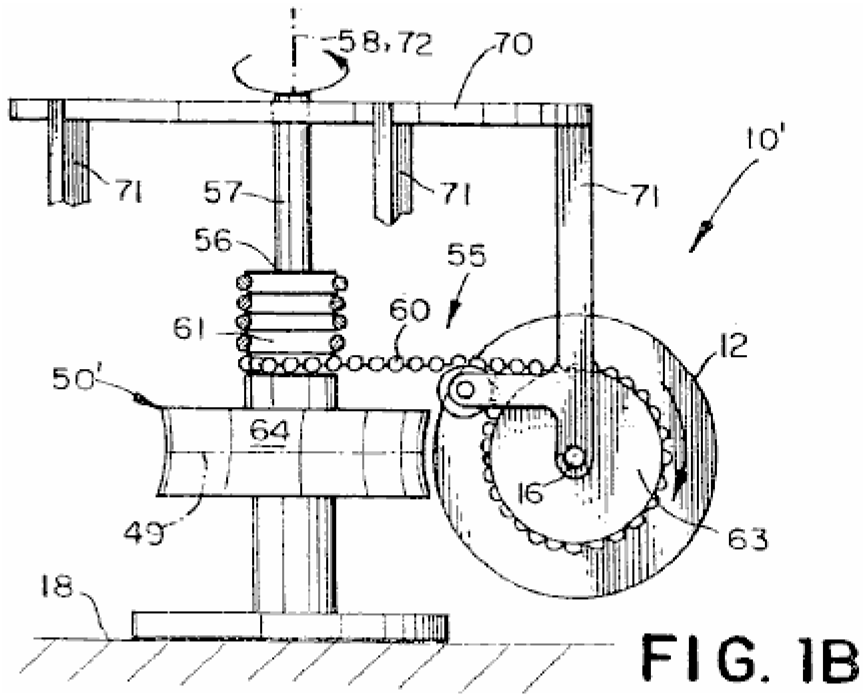

Fig.1B is a schematic perspective drawing of a second preferred embodiment of the motor;

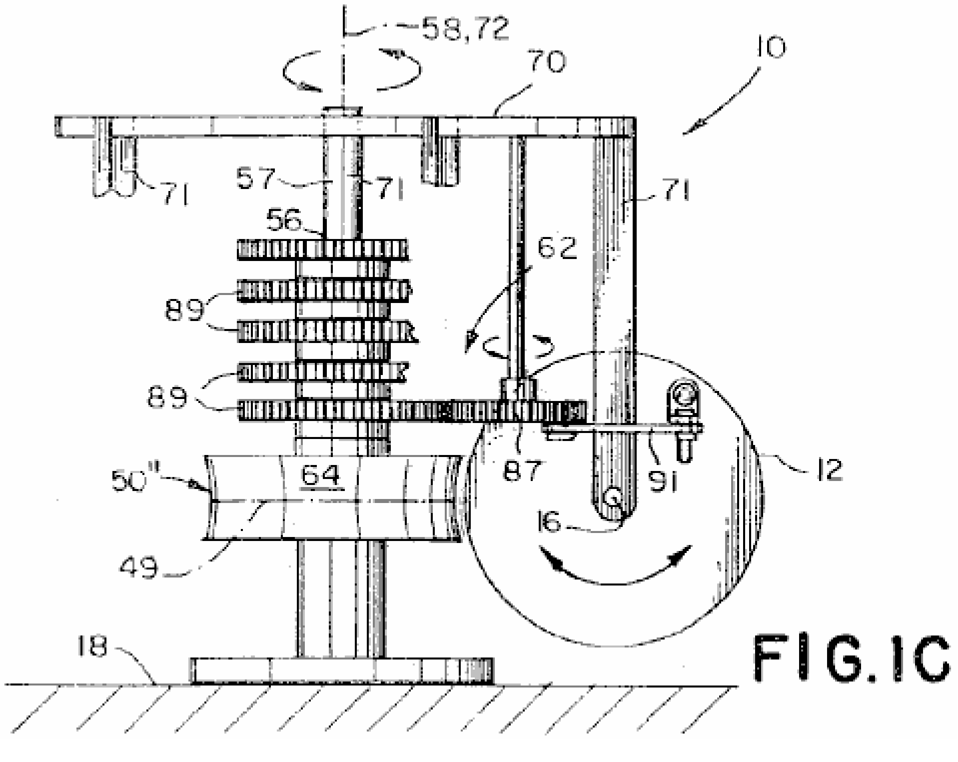

Fig.1C is a schematic perspective drawing of a third preferred embodiment of the motor;

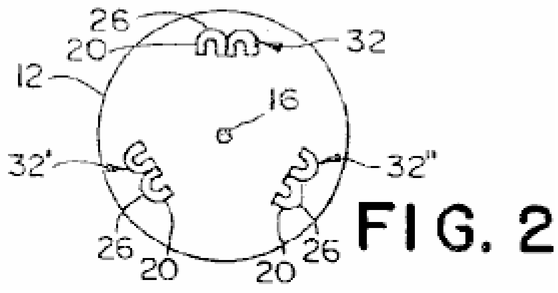

FIG. 2

Fig.2 is a schematic plan view of a rotor comprising three pair of U-shaped magnets;

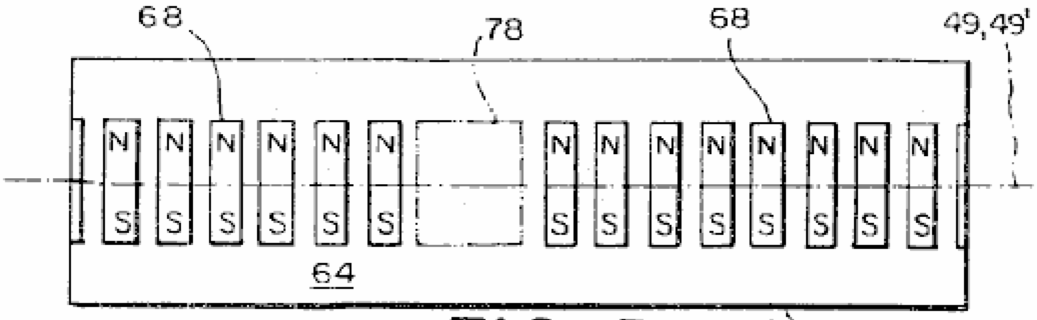

FIG. 3

Fig.3 is a schematic plan view of stator having a plurality of stator magnets generating a uniform magnetic field except in single null region, laid out flat for ease of illustration;

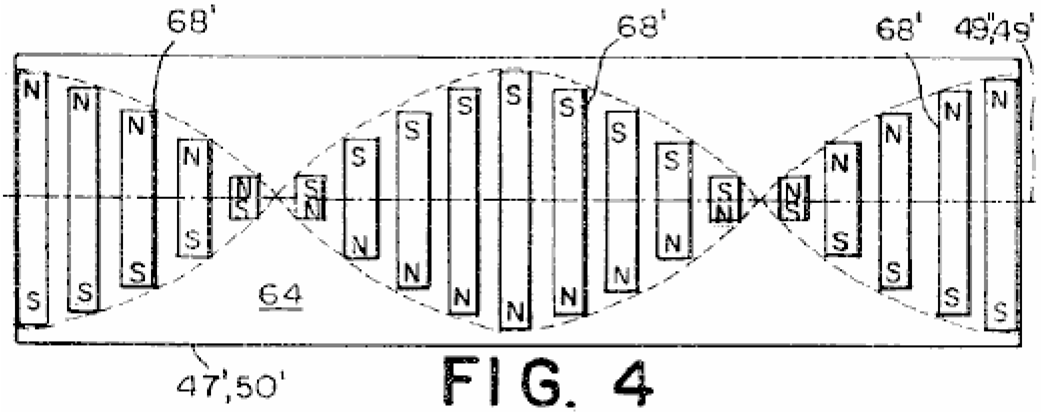

FIG. 4

Fig.4 is an schematic plan view of a stator having a plurality of stator magnets which rotate about a magnetic axis, laid out flat for ease of illustration;

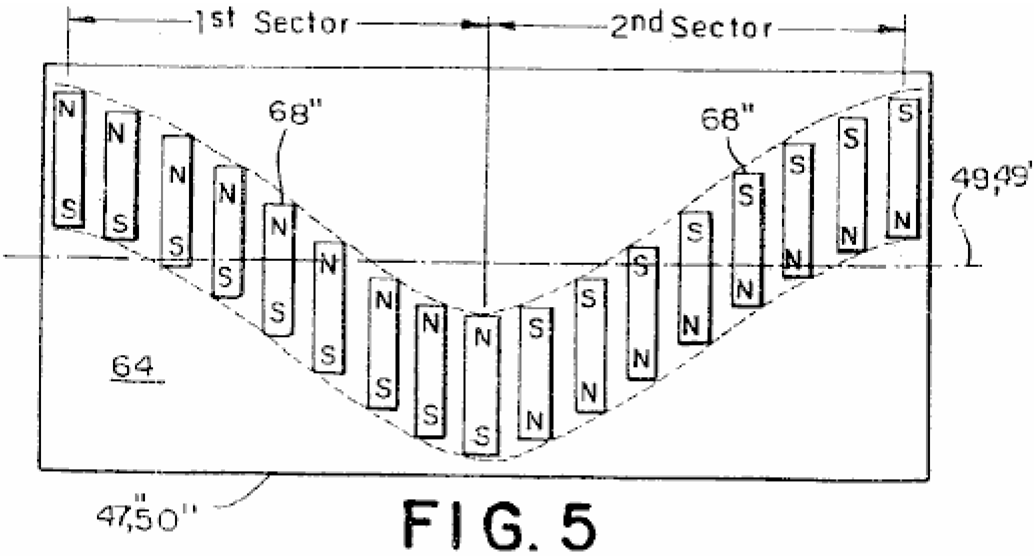

FIG. 5

Fig.5 is an schematic plan view of a stator having a plurality of stator magnets which are sinusoidally displaced from a line of demarcation, laid out flat for ease of illustration;

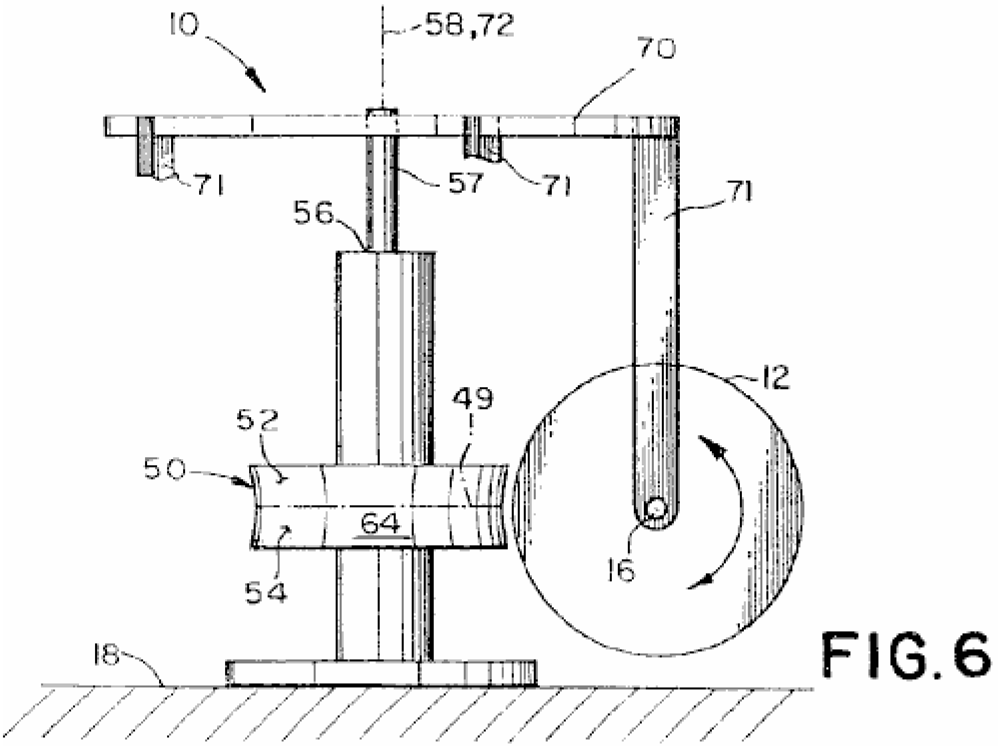

FIG. 6

Fig.6 is a schematic perspective view of a fourth through a seventh preferred embodiment of the motor;

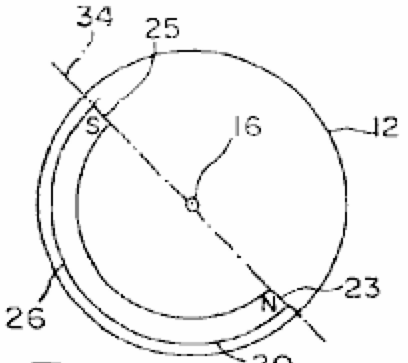

FIG7A

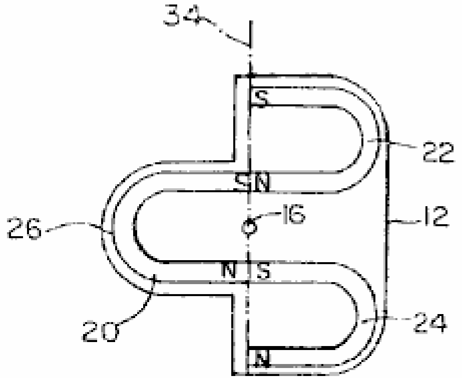

FIG.7B

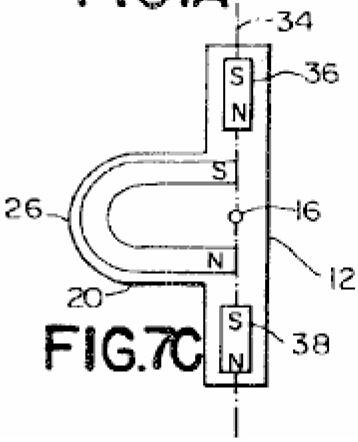

FIG.7C

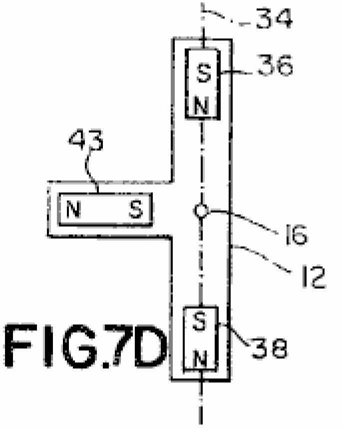

FIG.7D

Fig.7A is a schematic plan view of a rotor used in the fourth preferred embodiment and in an eighth preferred embodiment of the motor;

Fig.7B is a schematic plan view of a rotor used in a fifth preferred embodiment and in a ninth preferred embodiment of the motor;

Fig.7C is a schematic plan view of a rotor used in a sixth preferred embodiment and in a tenth preferred embodiment of the motor;

Fig.7D is a schematic plan view of a rotor used in the seventh preferred embodiment and in an eleventh preferred embodiment of the motor;

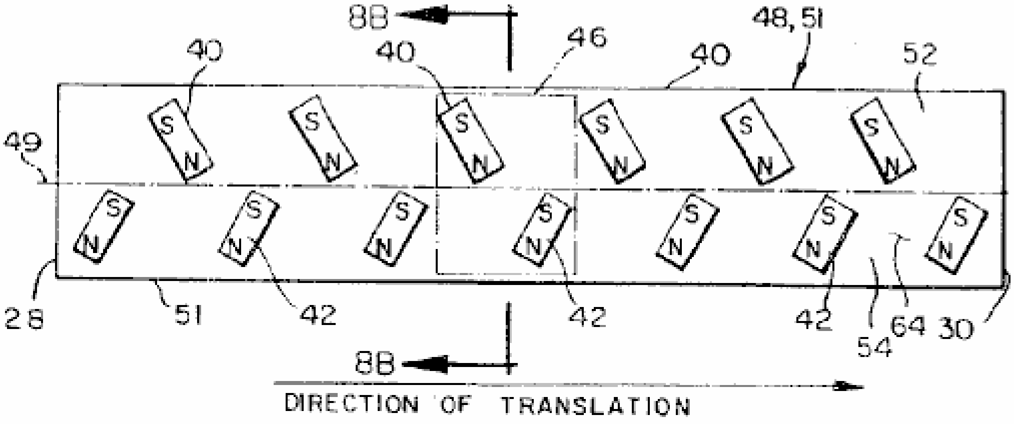

FIG. 8A

Fig.8A is a schematic plan view of a stator used in the fourth, fifth, eighth and ninth preferred embodiments of the motor;

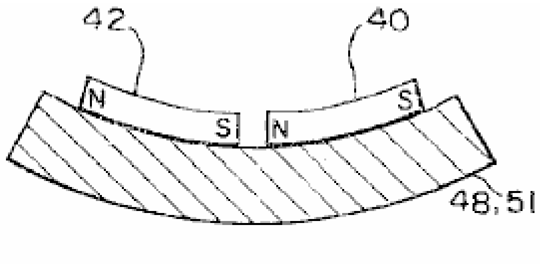

FIG. 8B

Fig.8B is a schematic sectional view of the stator shown in Fig.8A taken along the line 8B-8B;

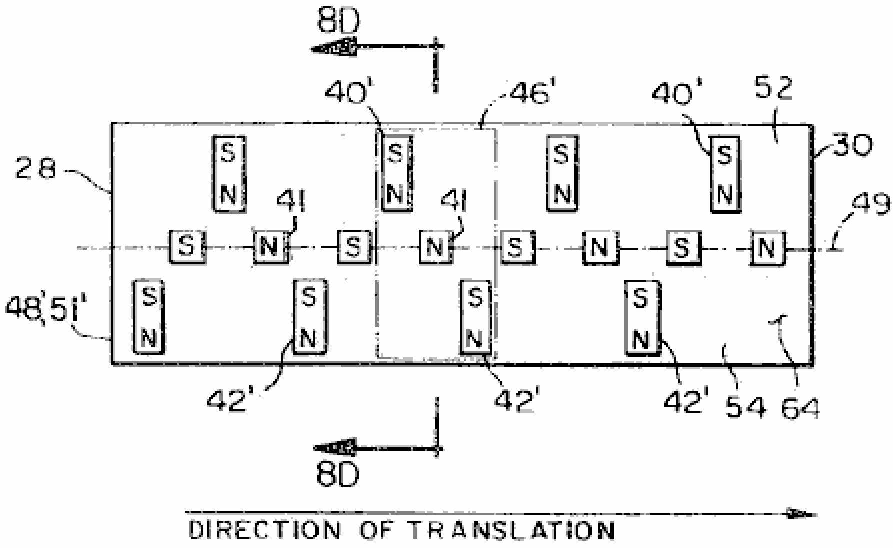

FIG. 8C

Fig.8C is a schematic plan view of a stator used in the sixth and in the tenth preferred embodiments of the motor;

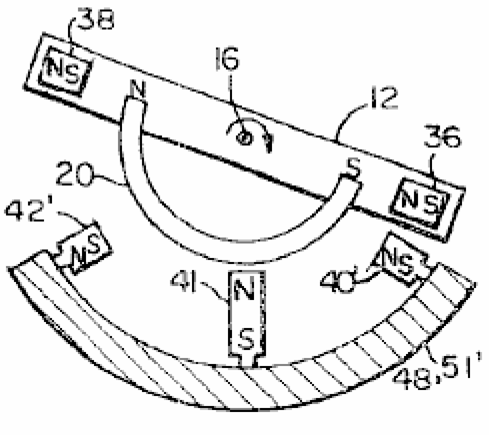

FIG. 8D

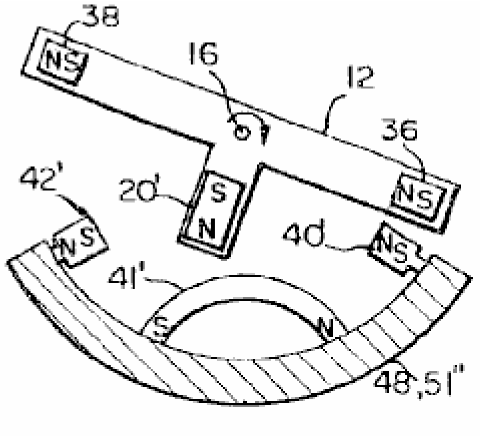

FIG. 8E

Fig.8D is a schematic elevational view of the stator shown in Fig.8C taken along the line 8D-8D shown with the rotor shown in Fig.7C;

Fig.8E is a schematic elevational view of an alternative stator shown with the rotor shown in Fig.7D;

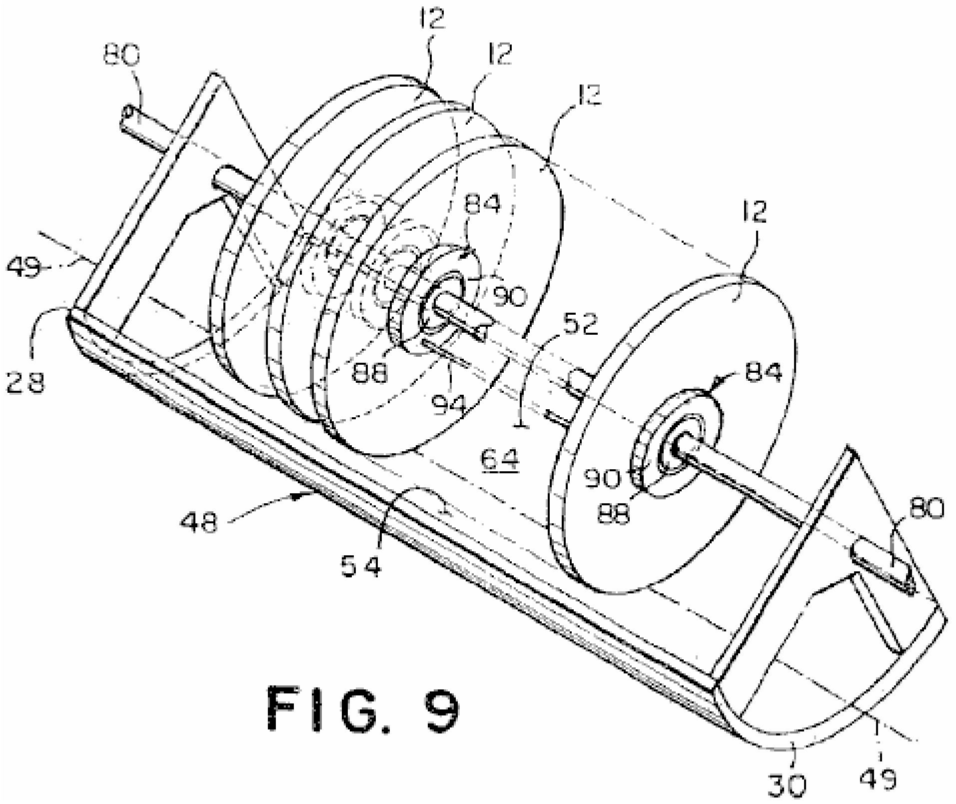

FIG. 9

Fig.9 is a schematic perspective view of the eighth through an eleventh preferred embodiment of the motor;

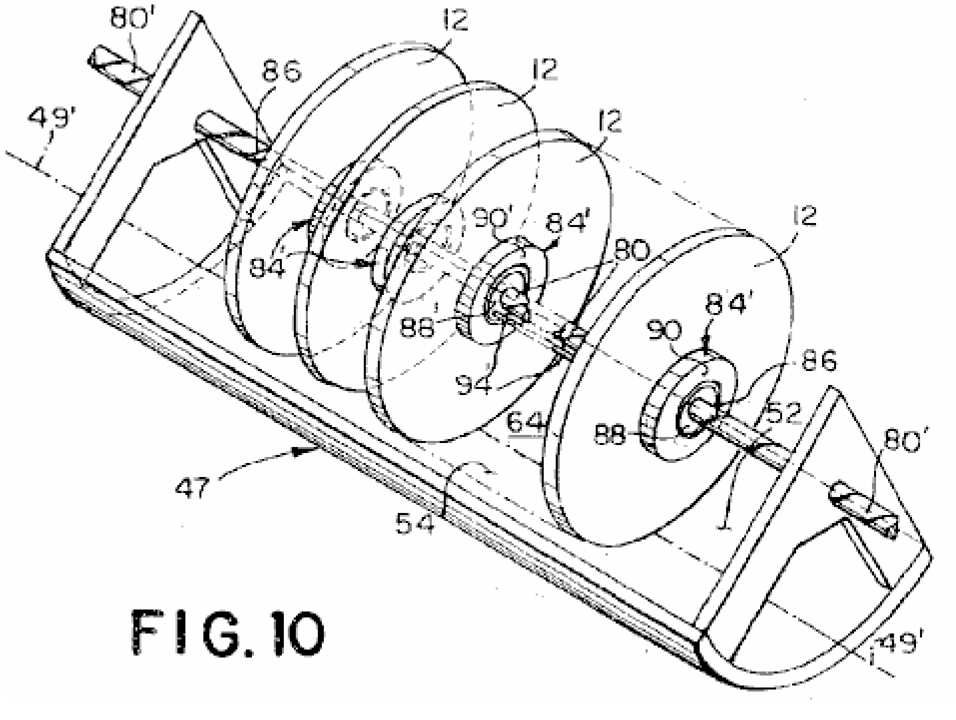

FIG. 10

Fig.10 is a schematic perspective view of a twelfth preferred embodiment of the motor;

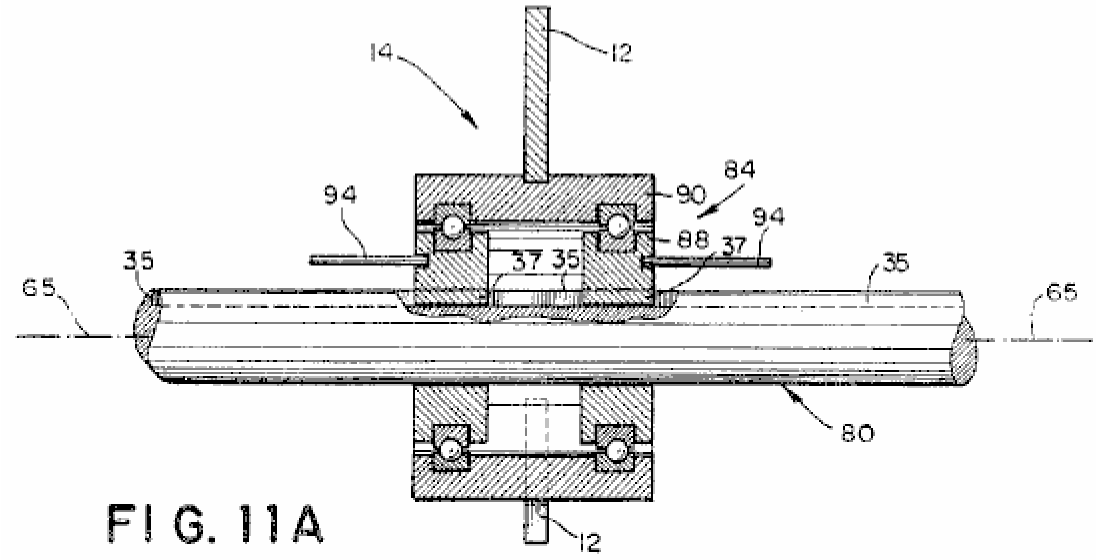

FIG. 11A

Fig.11A is a plan view of a rotor assembly used in the eighth through the eleventh preferred embodiments;

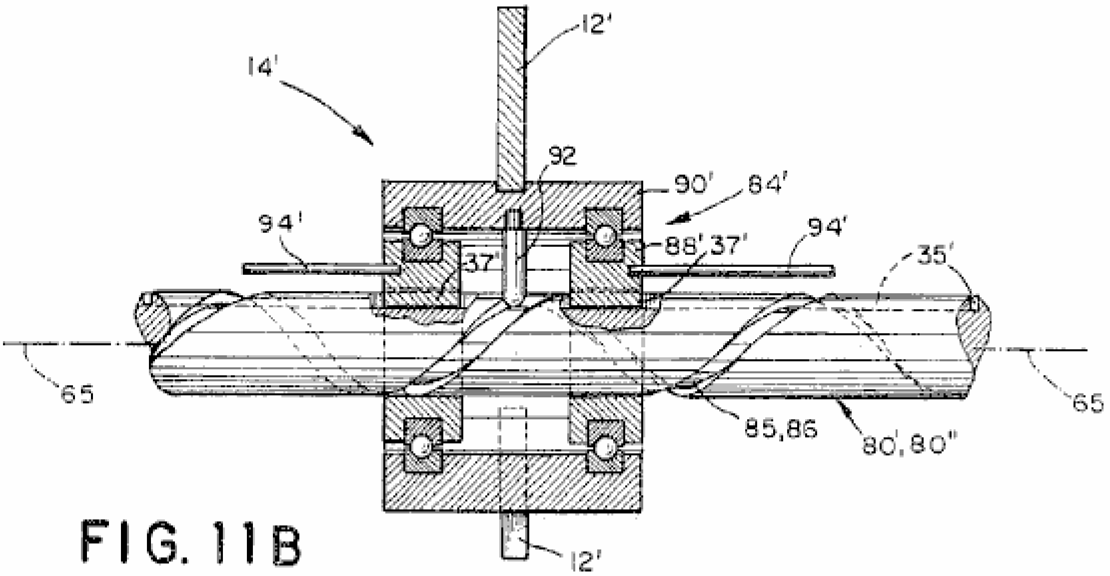

FIG. 11B

Fig.11B is a plan view of a rotor assembly used in the twelfth through a sixteenth preferred embodiment;

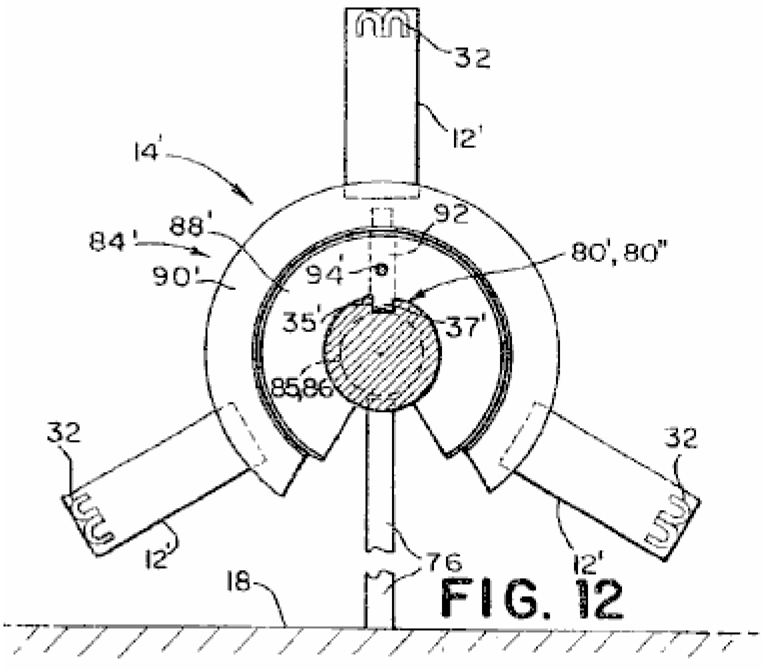

FIG. 12

Fig.12 is an end elevational view of the rotor assembly shown in Fig.11B, further including a rail mounting post;

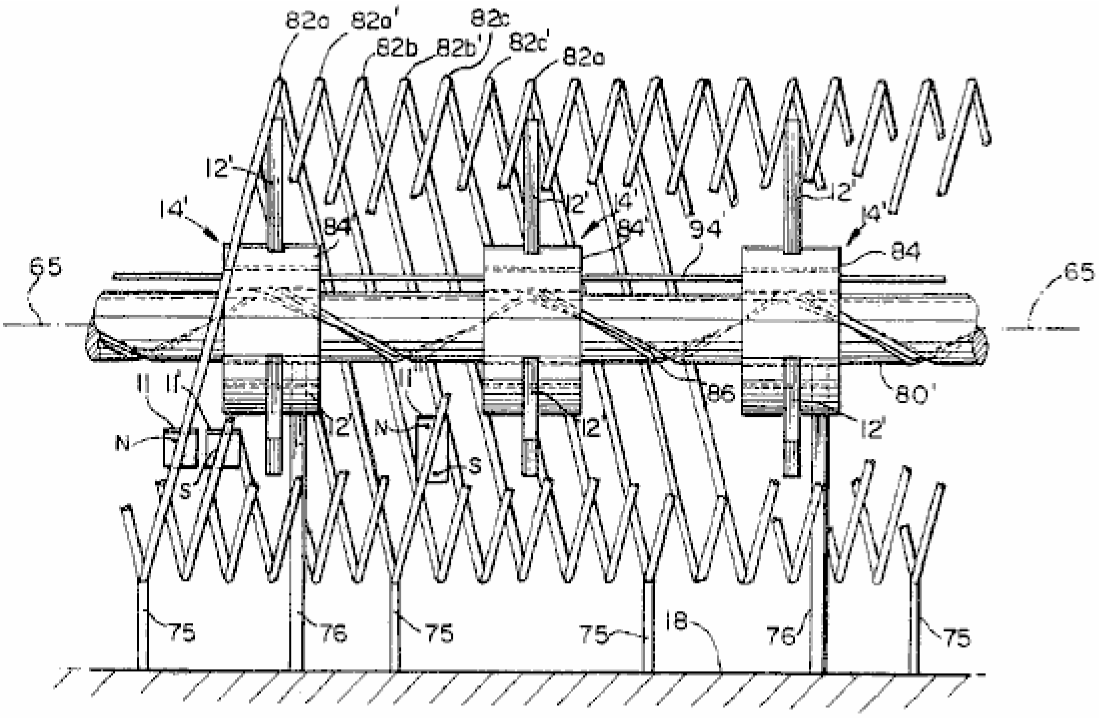

FIG. 13

Fig.13 is an elevational view of a thirteenth preferred embodiment of the motor;

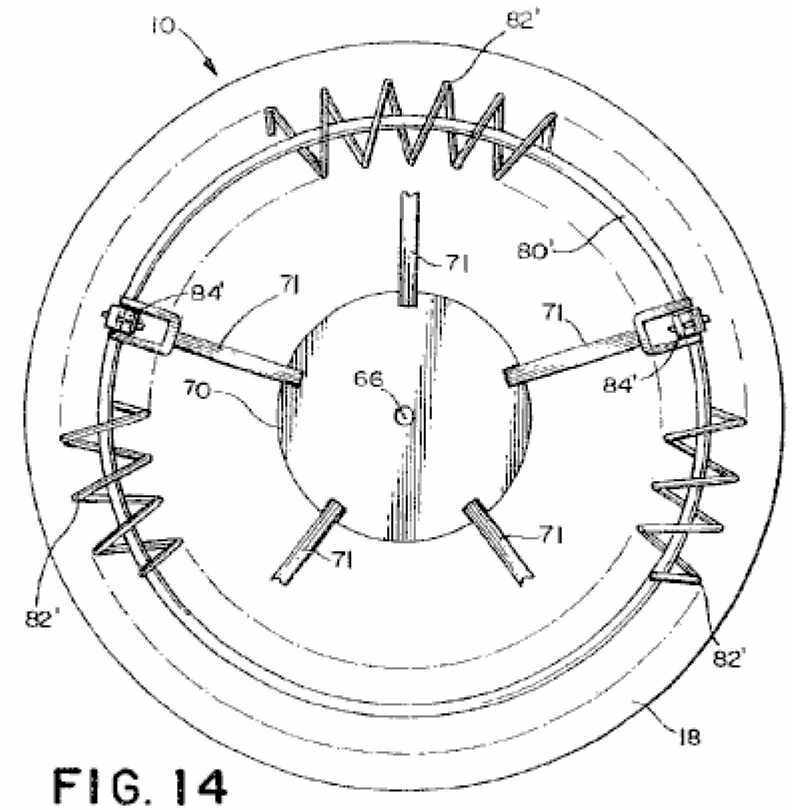

FIG. 14

Fig.14 is a plan view of a rotary configuration of the thirteenth preferred embodiment;

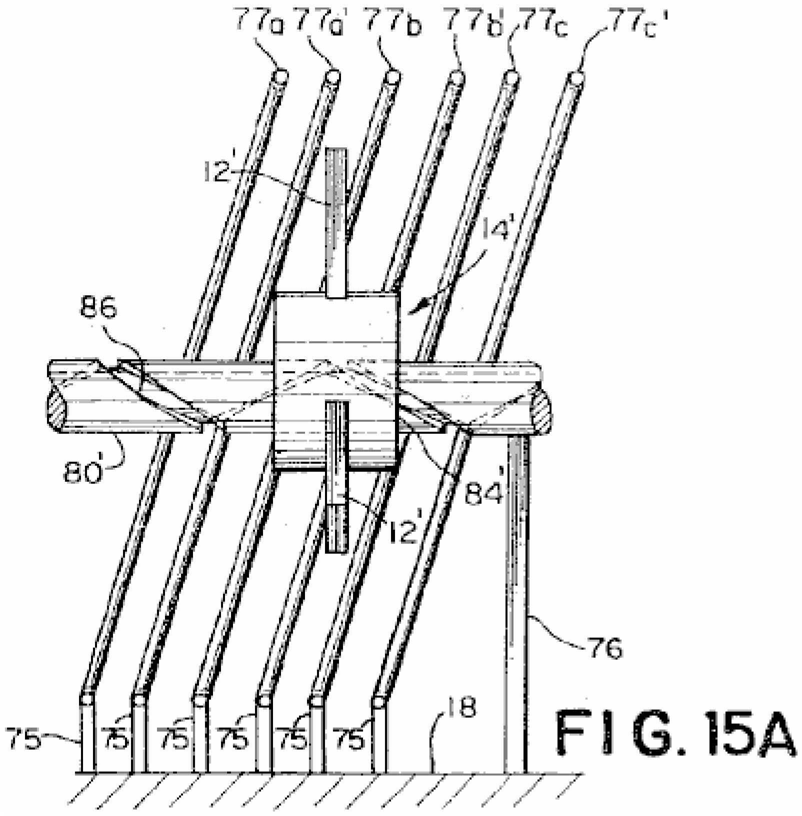

FIG. 15A

Fig.15A is an elevational view of a portion of a fourteenth preferred embodiment employing spaced apart ribs;

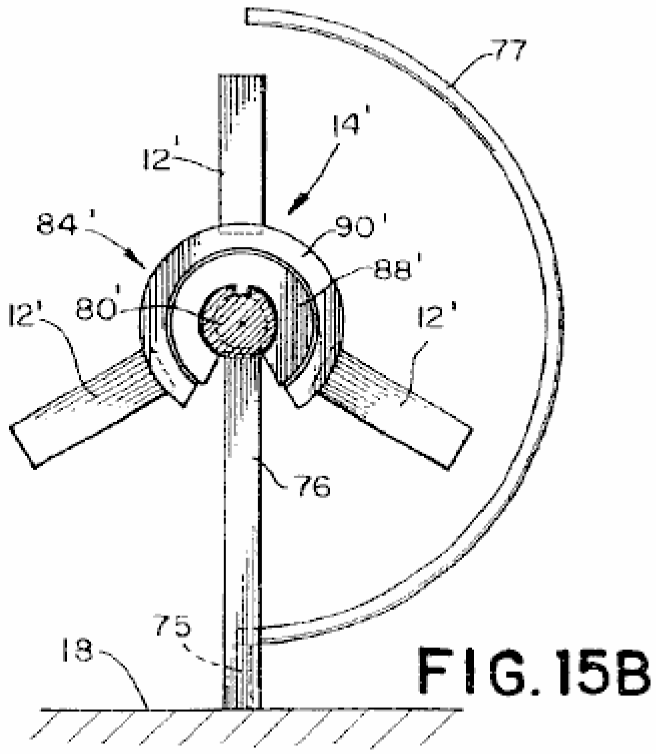

FIG.15B

Fig.15B is an end elevational view of the fourteenth embodiment shown in Fig.15A;

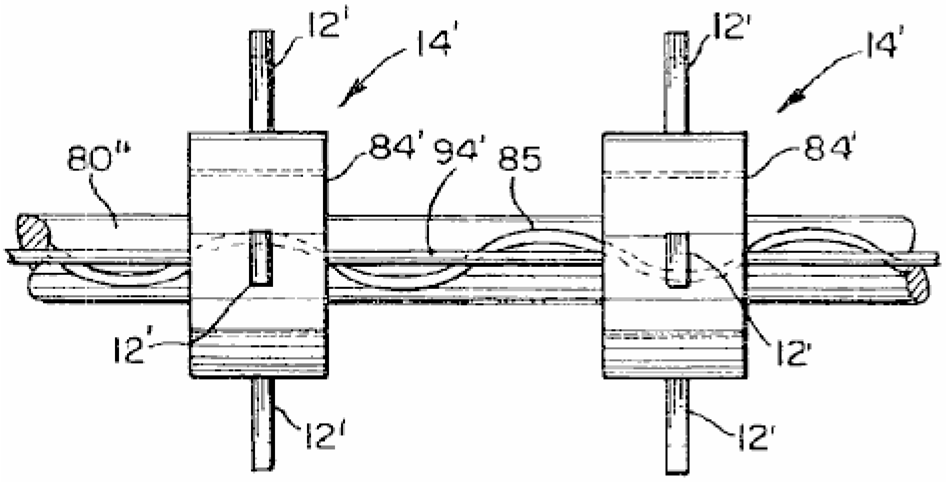

FIG. 16

Fig.16 is a top plan view of a portion of the fifteenth preferred embodiment of the motor;

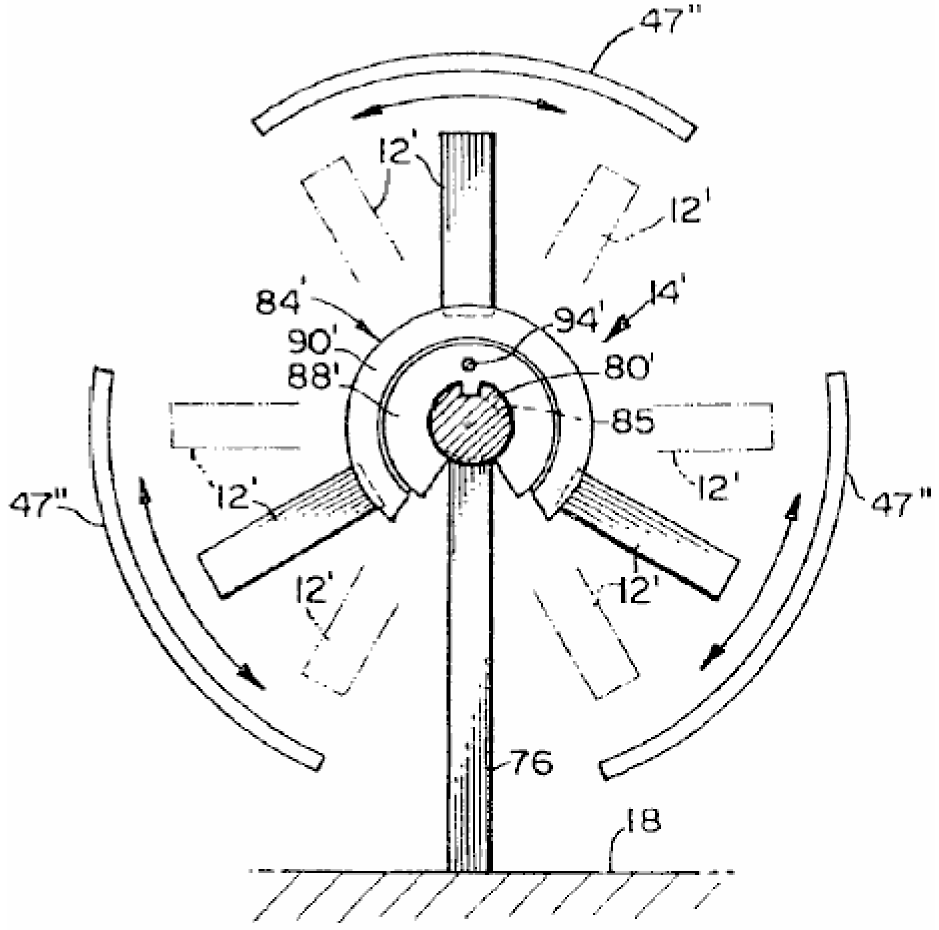

FIG. 17

Fig.17 is an elevational end view of the fifteenth preferred embodiment shown in Fig.16;

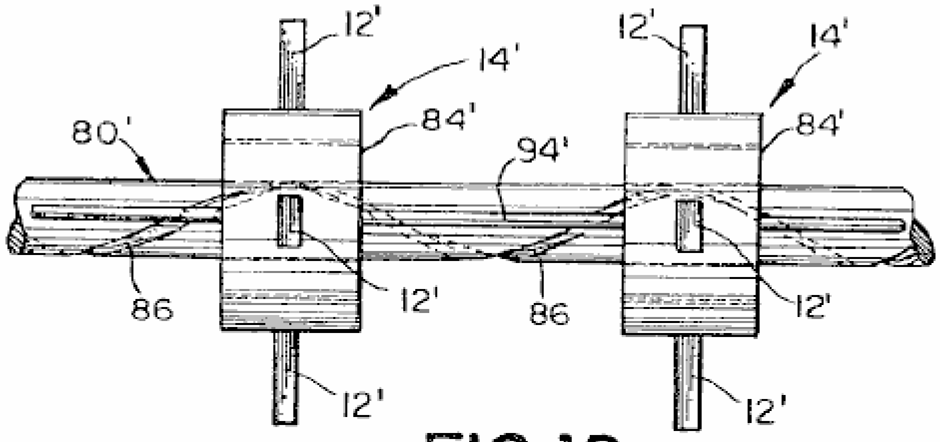

FIG.18

Fig.18 is a top plan view of a portion of the sixteenth preferred embodiment of the motor; and

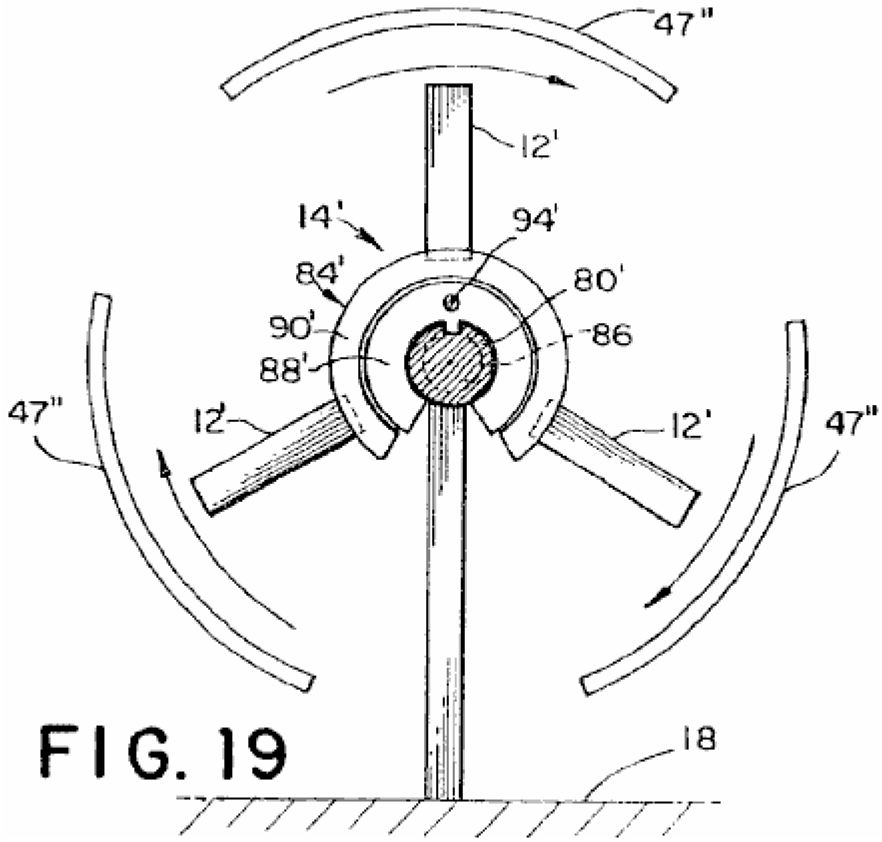

FIG. 19

Fig.19 is an elevational end view of the sixteenth preferred embodiment of the motor shown in Fig.18.

DETAILED DESCRIPTION OF THE INVENTION

It will be appreciated by those skilled in the art that changes could be made to the embodiments described above without departing from the broad inventive concept thereof. It is understood, therefore, that this invention is not limited to the particular embodiments disclosed, but it is intended to cover modifications within the spirit and scope of the present invention as defined by the appended claims. It should also be understood that the articles "a" and "the" used in the claims to define an element may refer to a single element or to a plurality of elements without a limit as to the number of elements.

Past attempts to construct a working permanent magnet motor have met with difficulties because of the simultaneous attractive and repulsive characteristics of a permanent magnet. A principle has been discovered where, by engaging a magnetic field at the rear of one or more U-shaped magnets mounted on a rotor with a second stationary magnetic field, a torque is created that rotates the rotor about a rotational axis of the rotor. Further, by properly shaping the second magnetic field, the rotor may be caused to also translate in the direction of the rotor axis.

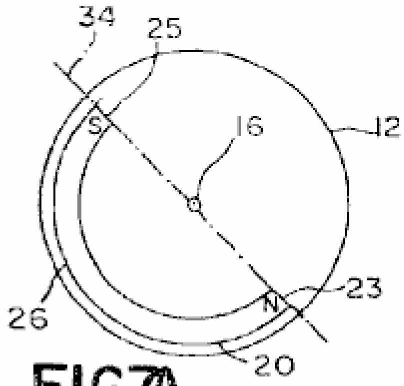

FIG7A

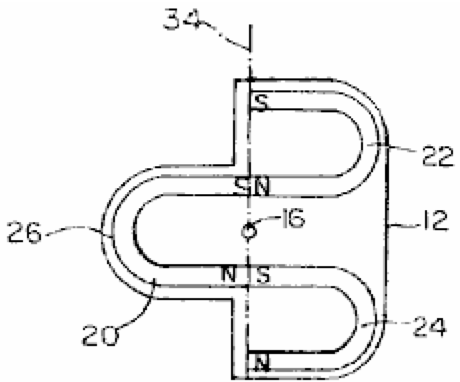

FIG.7B

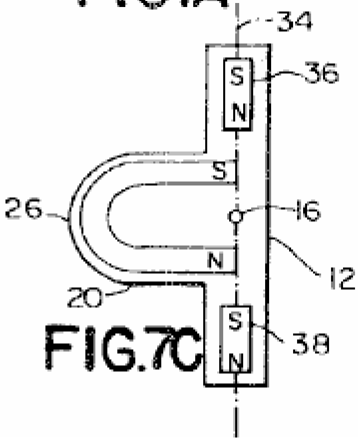

FIG.7C

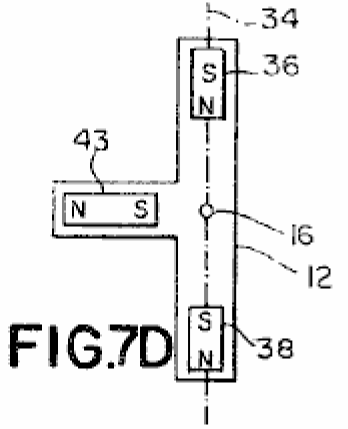

FIG.7D

Accordingly, using the aforementioned principle, and referring to **Fig.7A**, one aspect of the present invention is directed to a rotor **12** for use in a motor and which provides motive power by a rotation of the rotor **12** about a rotor axis **16** and by a translation of the rotor **12** in a direction of the rotor axis **16**. In one aspect, the rotor **12** comprises a first U-shaped magnet **20** in which the U-shaped magnet **20** generates a first magnetic field. A rotation of the rotor **12** about the rotor axis **16** is caused by an interaction of a portion of the first magnetic field directly adjacent to a rear **26** of the U-shaped magnet **20** with a stationary second magnetic field. A translation of the rotor **12** in the direction of the rotor axis **16** is caused by an interaction of the first magnetic field adjacent to a north pole **23** and a south pole **25** of the U-shaped magnet **20** with the stationary second magnetic field. As will be appreciated by those skilled in the art, the design of the rotor **12** is not limited to a single U-shaped magnet **12**. A plurality of U-shaped magnets **20**, arranged around a periphery of the rotor **12** is within the spirit and scope of the invention.

Another aspect of the present invention, shown in **Fig.7B** comprises a rotor **12** including a first U-shaped magnet having a north pole and a south pole generating a first magnetic field; a second U-shaped magnet **24** having a north pole and a south pole with the south pole of the second U-shaped magnet **24** abutting the north pole of the first U-shaped magnet **20**; and a third U-shaped magnet **22** having a north pole and a south pole with the north pole of the third U-shaped magnet **22** abutting the south pole of the first U-shaped magnet **20**. A portion of the first magnetic field generated by the first U-shaped magnet **20** directly adjacent to the rear **26** of the first U-shaped magnet **20** interacts with a stationary fourth magnetic field to cause the rotor **12** to rotate. A second magnetic field generated by the north pole of the second U-shaped magnet **24** and a third magnetic field generated by the south pole of the third U-shaped magnet **22** respectively interact with the fourth magnetic field to cause the rotor **12** to translate in the direction of the rotor axis **16**.

A further aspect of the present invention, shown in **Fig.7C**, comprises a first U-shaped magnet **20** having a north pole and a south pole generating a first magnetic field. The north pole and the south pole of the U-shaped magnet **20** are generally aligned with a thruster axis **34** which lies in the plane of the rotor **12** and intersects the rotor axis **16**. A first thruster magnet **36** is located proximate to and spaced from the north pole of the first U-shaped magnet with a direction of magnetisation being generally aligned with the thruster magnet axis **34**. A second thruster magnet **38** is located proximate to and spaced from the south pole of the first U-shaped magnet **20** with a direction of magnetisation also being generally aligned with the thruster magnet axis **34**. A portion of the first magnetic field generated by the first U-shaped magnet **20** directly adjacent to the rear side **26** of the first U-shaped magnet **20** interacts with a stationary fourth magnetic field to cause the rotor **12** to rotate. A second magnetic field generated by both the north pole and the south pole of the first thruster magnet **36** and a third magnetic field generated by both the north pole and the south pole of the second thruster magnet **38** respectively interact with a fifth magnetic field to cause the rotor **12** to translate in the direction of the rotor axis **16**. In one further aspect of the rotor **12**, as shown in **Fig.7D**, a bar magnet **43** may be substituted for the U-shaped magnet **20** and the fourth magnetic field is formed by one or more U-shaped magnets, where the bar magnet **43** interacts with a portion of the stationary fourth magnetic field adjacent to the rear of a U-shaped magnet.

As will be appreciated by those skilled in the art, the polarities of the magnets shown in **Figs. 7A, 7B, 7C** and **7D** may be reversed and still be within the spirit and scope of the invention.

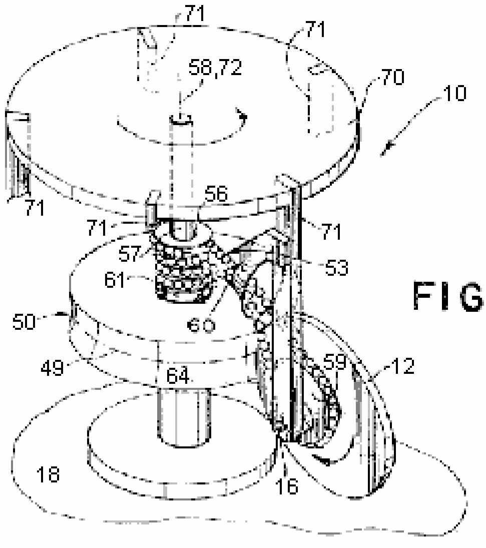

FIG.1A

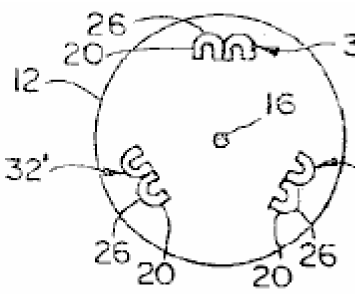

FIG. 2

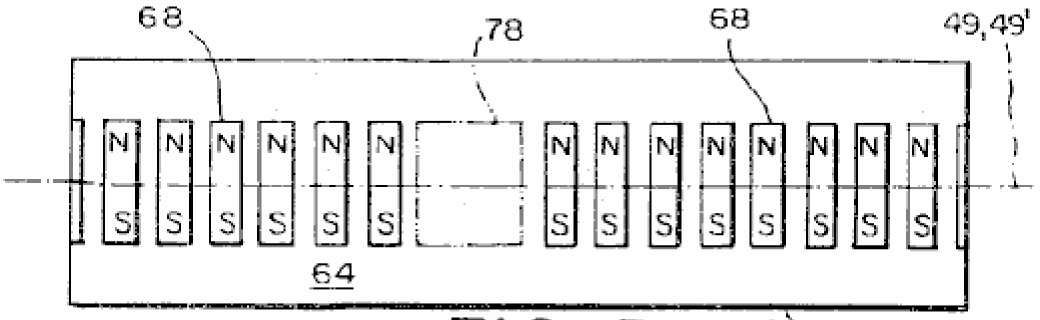

FIG. 3

Referring now to **Fig.1A**, **Fig.2** and **Fig.3** there is shown a first preferred embodiment of a motor **10** using the rotor **12** and providing unidirectional rotational motive power. The first preferred embodiment comprises a generally circular stator **50** having a stator axis **72** and a circumferential surface **64** mounted to a base **18**; an armature **70**, having an armature axis of rotation **58** coincident with the stator axis **72**, attached to the stator **50** by an armature axle **57** for rotation about the armature axis of rotation **58**; and five rotors **12** (only one of which is shown for clarity), the rotors **12** being spaced at intervals of about **72** degrees around the armature **70**. Each rotor **12** is spaced from the armature by an armature strut **71** and attached to the armature strut **71** by an axle, for rotation about an axis **16** of the rotor **12** in a plane generally aligned with the armature axis of rotation **58**. The motor **10** further includes a driving linkage assembly **53** connecting each rotor **12** and the stator **50** together, the linkage **53** urging the armature **70** to rotate about the armature axis of rotation **58** as each rotor **12** rotates about its respective rotor axis **16**. As will be appreciated by those skilled in the art the number of rotors **12** is not limited to the five rotors **12** disclosed in the first embodiment. Any number of rotors **12** from one to as many as there would be space for mounting on the armature **70** is within the spirit and scope of the invention.

Preferably, the surface **64** of the stator **50** is curved, having a curvature conforming to the arc of the rotors **12**. However, it will be appreciated by those skilled in the art that the surface **64** need not be curved but could be planar and still be within the spirit and scope of the invention. As will be appreciated by those skilled in the art the stator **50** is merely intended as a stationary supporting structure for stator magnets and, as such, the shape of the stator **50** is not intended to be controlling of the size and shape of the air gap between the magnets attached to the stator **50** and the magnets attached to the rotors **12**.

Preferably, the stator **50** is made of a material (or a combination of materials) having a magnetic susceptibility less than 10-3, i.e. a material displaying paramagnetic or diamagnetic properties. For example, the stator **50** could be made of a non-magnetic metal such as aluminium or brass. Also, the rotor **12** could be made of a natural material such as wood, glass, a polymeric material or a combination of any of the aforementioned materials within the spirit and scope of the invention. Further, it should be understood that the aforementioned materials are preferred for the stators and all other parts of the motor **10** that could significantly disrupt the magnetic interaction between the stator and the rotor of all of the disclosed preferred embodiments of the motor **10**.

In the first preferred embodiment, the surface **64** of the stator **50** includes a circumferential line of demarcation **49** at about a midpoint of the surface **64** formed by an intersection with the surface **64** of a plane perpendicular to the armature axis of rotation **58**. As shown in **Fig.3**, the stator **50** includes a plurality of bar magnets **68** attached to the outer surface **64** along the line of demarcation **49**, except in a single null region **78** where the magnitude of the first magnetic field is substantially reduced. The bar magnets **68** have a direction of magnetisation at about a right angle to the line of demarcation **49** thereby creating a first magnetic field adjacent to the outer surface **64**, the magnitude and the direction of which is substantially uniform along the circumferential line of demarcation **49** around the axis **58** of the stator **50**, except within the null region **78**. As will be appreciated by those skilled in the art, the stator axis **72** need not be coincident with the armature axis of rotation **58**. Accordingly, a stator **50** arranged around the armature axis **58** at any location at which the stator axis **72** is parallel to the armature axis **58** and the surface **64** of the stator **50** faces the periphery of the rotors **12** thereby providing for the interaction between the first magnetic field and the second magnetic field around the armature axis **58**, is within the spirit and scope of the invention.

Preferably, as further shown in **Fig.3**, the bar magnets are attached to the surface **64** of the stator **50** so that the direction of magnetisation of the bar magnets **68** are about perpendicular to a radial line of the rotor **12**. However, the bar magnets **68** could also be attached to the surface **64** of the stator so that the direction of magnetisation of the bar magnets **68** is aligned with a radial line of the rotor **12**. The bar magnets **68** are preferably abutting so as to form the substantially uniform first magnetic field. However, it is not necessary for the bar magnets **68** to abut one another. Further, it is not necessary to use a plurality of bar magnets **68** to form the first magnetic field. A single magnet producing a uniform first magnetic field in the region in which the first magnetic field interacts with the second magnetic field of the rotors **12** would provide the required first magnetic field. Also, the number of null regions **78** may be more than one, depending upon the desired speed of the motor, as explained below.

Preferably, the stator magnets **68** are permanent magnets made of a neodymium-iron-boron material. However, as will be appreciated by those skilled in the art, any type of permanent magnet material displaying ferromagnetic properties could be used for the stator magnets **68**. For instance, stator magnets **68** made of samarium cobalt, barium ferrite or AlNiCo are within the spirit and scope of the invention. It should be understood that these permanent magnet materials or their equivalents are preferred for the stator magnets and the rotor magnets of all of the disclosed preferred embodiments of the motor **10**. Also, while the use of permanent magnets is preferred, the use of electro-magnets for some or all of the magnets is within the spirit and scope of the invention.

As discussed above, the stator **50** may include a pre-determined number of null regions **78** on the surface of the stator **64**. In the first preferred embodiment, the single null region **78** is formed by a shield of a ferromagnetic material, such as iron, placed adjacent to the surface **64**. However, as those skilled in the art will appreciate, the null region **78** can also be formed by an absence of the bar magnets **68** in the region coinciding with the null region **78**. The null region **78** of substantially reduced magnetic field magnitude may also be formed by an auxiliary magnetic field suitably generated by one or more permanent magnets or by one or more electromagnets powered by an electric current arranged so that the auxiliary magnetic field substantially cancels the first magnetic field in the null region **78**. In the case of the electromagnets, the electric current may be turned off in synchronism with the rotation of the rotors **12** passing through the null region **78**, in order to conserve power. Preferably, the first magnetic field is reduced to ten percent or less of the magnetic force outside of the null region. However, the motor **10** will operate with a reduction of only fifty percent. Accordingly, a motor **10** having a substantial reduction of the first magnetic field of fifty percent or less is within the spirit and scope of the invention.

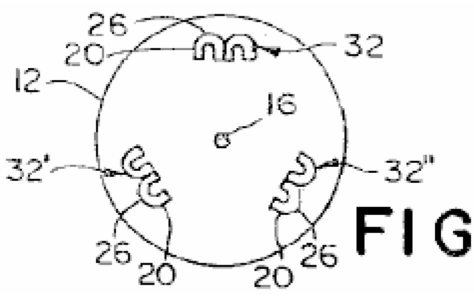

FIG. 2

As shown in **Fig.2**, the rotor **12** of the first preferred embodiment includes three pairs **32**, **32'**, **32"** of abutted U-shaped magnets **20** spaced apart at about 120 degree intervals around the periphery of the rotor **12**. Preferably, the U-shaped magnets **20** having substantially identical magnetic properties and are arranged to have opposite poles of the abutting each other. The pairs **32**, **32'**, **32''** of abutted U-shaped magnets **20** are positioned so that the north pole and the south poles of each U-shaped magnet **20** face toward the axis of the rotor **16**, and the rear side **26** of each U-shaped magnet **20**, opposite to the north and the south pole of the U-shaped magnet **20**, faces out from the axis of the rotor **16** toward the surface **64** of the stator **50**. The pairs **32**, **32'**, **32''** of the U-shaped magnets **20** are situated on the rotor **12** so that a portion of the second magnetic field directly adjacent to the rear **26** of each U-shaped magnet **20** interacts with a first stationary magnetic field to cause the rotor **12** to rotate about its respective rotor axis **16**. Those skilled in the art will appreciate that it is not necessary to have exactly three pairs **32**, **32'**, **32''** of U-shaped magnets **20** on the rotor **12**. For instance, the number of U-shaped magnets **20** (or groups of abutted U-shaped magnets) spaced apart around the periphery of the rotor **12** may range from merely a single U-shaped magnet **20**, up to a number of magnets limited only by the physical space around the periphery of the rotor **12**. Further, the number of abutted U-shaped magnets **20** within each group of magnets **32** is not limited to two magnets but may also range from 1 up to a number of magnets limited only by the physical space around the periphery of the rotor **12**.

Preferably, the rotor **12** is made of a material (or a combination of materials) having a magnetic susceptibility less than 10-3. Accordingly, the rotor could be made of any of the same materials used to make the stator, such as for instance, a non-magnetic metal, wood, glass, a polymeric or a combination of any of the above as shown in **Fig.1A**, the rotor **12** is preferably disk shaped with the rear **26** of the U-shaped rotor magnets **20** being arranged on the periphery of the rotor **12** in such a way that the U-shaped magnets **20** pass in close proximity to the circumferential line of demarcation **49** on the outer surface **64** of the stator **50** as the rotor **12** rotates. However, as will be clear to those skilled in the art, the structure of the rotor **12** need not be disk shaped. The rotor **12** could be a structure of any shape capable of rotating around the rotor axis **16** and capable of supporting the U-shaped magnets **20** so that, as the rotor **12** rotates, the U-shaped magnets **20** come into close proximity with the outer surface **64** of the stator **50**. For example, a rotor **12** comprised of struts connected to a central bearing, where each strut holds one or more U-shaped magnets **20**, is within the spirit and scope of the invention.

In the first preferred embodiment, the linkage **53** connecting each rotor **12** and the stator **50** comprises a beaded chain drive **60** which meshes with a stator sprocket **61** on the stator **50**, and an eccentric rotor sprocket **59** on each rotor **12** so that, as each rotor **12** rotates about its respective rotor axis **16**, the armature **70** is forced to rotate about the armature axis of rotation **58**. The eccentric rotor sprocket **59** causes the instantaneous angular velocity of the rotor **12** about the rotor axis **16** to increase above the average angular velocity of the rotor **12** as each pair **32**, **32'**, **32''** of U-shaped magnets **20** passes through the null region **78**. As will be appreciated by those skilled in the art, the rotor sprocket **59** could be circular and the stator sprocket **61** eccentric and still cause the angular velocity of the rotor **12** to increase. Further, the beaded chain **60** in combination with the stator sprocket **61** and the eccentric rotor sprocket **59** are not the only means for connecting each rotor **12** to the stator **50**. For instance, the beaded chain **60** could also be a belt. Further, the linkage **53** could comprise a drive shaft between each rotor **12** and the stator **50**, the drive shaft having a bevel gear set at each end of the shaft mating with a bevel gear on the rotor **12** and the stator **50**. An automatic gear shift mechanism would shift gears as each U-shaped magnet pair **32**, **32'**, **32''** entered the null regions **78** to increase the instantaneous angular velocity of the rotor **12** as the pair **32**, **32'**, **32''** of rotor magnets **20** passed through the null region **78**. Alternatively the linkage **53** could comprise a transmission system employing elliptical gears.

While it is preferred that the instantaneous angular velocity of the rotor **12** to increase above the average angular velocity of the rotor **12** as each pair of U-shaped magnets **20** passes through the null region **78**, it is not necessary to provide the increased angular velocity of the rotor **12** to provide motive power from the motor **10**.

Preferably, the diameters of the rotor sprocket **59** and stator sprocket **61** are selected so that the rear **26** of each U-shaped magnet **20** passes through one and only one null region **78** for each full revolution of the rotor **12** about the respective rotor axis **16** as the armature **70** rotates about the armature axis of rotation **58**. Accordingly, the revolution rate of the armature **70** is related to the revolution rate of the rotor **12** by the expression:

Sa = (Nr / Ns) x Sr .... (1)

Where:
Sa is the angular velocity of the armature **70** (RPM);
Nr is the number of the U-shaped magnets **20** (or groups of abutted U-shaped magnets **32**) on a rotor **12**;
Ns is the number of null regions **12** on the stator **50**; and
Sr is the angular velocity of the rotor **12** (RPM).

The timing of the rotation of the rotor **12** around its respective rotor axis **16**, and the armature **70** about the armature axis of rotation **58** is such that each U-shaped magnet **20** (or U-shaped magnet pair **32**, **32'**, **32''**) on each rotor **12** enters into a null region **78** at a point where the magnetic interaction between the first magnetic field and the second magnetic field is substantially reduced, thus providing a commutation of the second magnetic field. As each rotor **12** continues to rotate about the rotor axis **16** and the armature **70** rotates about the armature axis of rotation **58**, the U-shaped magnet **20** traces a slanted path through the null region **78**. As the U-shaped magnet emerges from the null region **78**, the U-shaped magnet **20** encounters the strong first magnetic field, which urges the U-shaped magnet **20** to continue the rotation of the rotor **12** about the rotor axis **16**.

As previously discussed, the first preferred embodiment of the motor **10** comprises a single null region **78** and five rotors **12**, each rotor **12** having three pairs **32**, **32'**, **32"** of abutted U-shaped magnets **20**. Preferably, the rotors **12** are uniformly spaced around the armature axis of rotation **58** and the pairs **32**, **32'**, **32"** of U-shaped magnets **20** are uniformly spaced around the periphery of each respective rotor **12**. Further, the pairs **32**, **32'**, **32"** of U-shaped magnets **20** on each rotor **12** are phased with respect to each other by one-fifth of a revolution of the rotor **12** (i.e. the reciprocal of the number of rotors) so that the pairs **32**, **32'**, **32"** of U-shaped magnets **20** of all the rotors **12** enter the null region at substantially uniform intervals to provide a more or less continuous magnetic interaction between the first magnetic field of the stator **50** and the second magnetic field of the rotors **12**. As will be appreciated by those skilled in the art, the motive power provided by the motor is proportional to the number of rotors **12** and the number of magnets **20** on each rotor **12** as well as the strength of the rotor **12** magnets **20** and the stator **50** magnets **68**. Accordingly, the number of rotors **12** and the number of pairs **32**, **32'**, **32"** of U-shaped magnets **20** are not limited to five rotors **12** and three pairs of U-shaped magnets **32**. Similarly, the number of null regions **78** is not limited to one. The number of U-shaped magnets **20** and the number of null regions **78** are limited only by adherence to the rule established by **Equation (1)**.

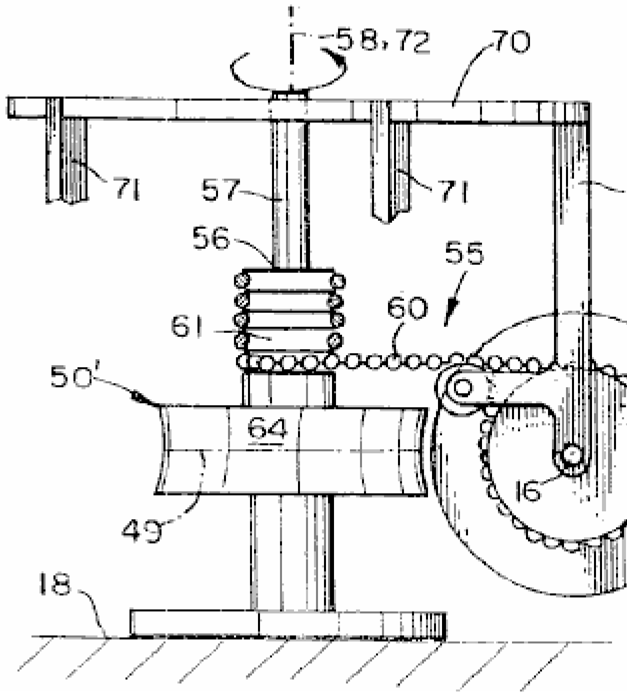

FIG. 1B

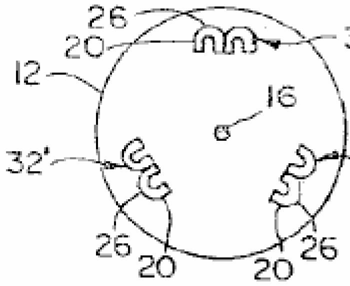

FIG. 2

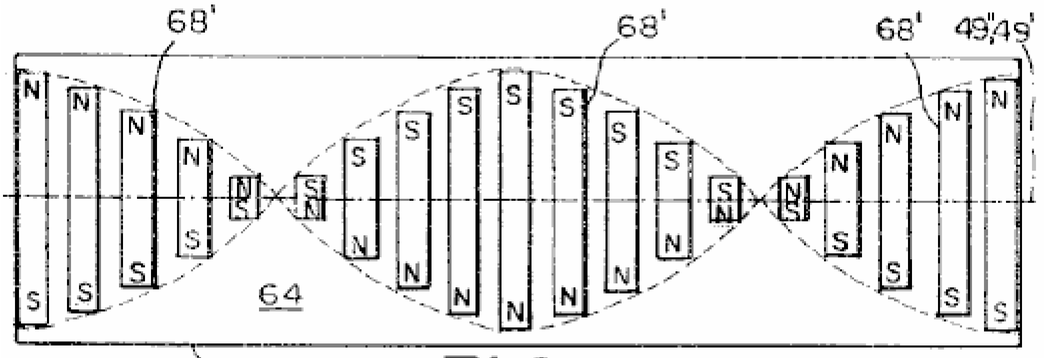

FIG. 4

Referring now to **Fig.1B**, **Fig.2 and** Fig.4 there is shown a second preferred embodiment of a motor **10** providing unidirectional rotational motive power. The second preferred embodiment comprises a generally circular stator **50'** having a stator axis **72** with magnets **68'** attached to a surface **64** of the stator **50'**; an armature **70** attached to the stator **50'** by an armature axle **57** for rotation about an armature axis of rotation **58** coincident with the stator axis **72**; and five rotors **12** (for clarity, only one of which is shown) having three pairs **32**, **32'**, **32"** of abutted U-shaped magnets **20**, the rotors **12** being spaced at intervals of about **72** degrees around the armature **70**. Each rotor **12** is spaced from the armature by a strut **71** and attached to the strut **71** by an axle for rotation in the plane of the armature axis of rotation **58** about a rotor **12** axis of rotation **16**. The motor **10** further includes a driving linkage **55** connecting each rotor **12** and the stator **50** together to cause the armature **70** to rotate about the armature axis of rotation **58** as each rotor **12** rotates about its respective rotor axis **16**.

The second preferred embodiment is identical to the first preferred embodiment except for two differences. First, instead of the first magnetic field being uniform in both magnitude and direction along the circumferential line of demarcation **49** (except in one or more null regions **78** as in the first preferred embodiment), the direction of the first magnetic field rotates about a magnetic axis parallel to the circumferential line of demarcation **49** with a pre-determined periodicity along the line of demarcation **49**. Preferably, the first magnetic field is formed from one or more stator magnets **68'** attached to the outer surface **64** of the stator **50'**, each magnet **68'** having a direction of magnetisation which causes the first magnetic field to rotate about the magnetic axis. In the second preferred embodiment, as shown in **Fig.4**, the stator magnets **68'** are equally sized bar magnets, attached to the stator **50'** so that the bar magnets **68'** spiral on the stator **50'** with the pre-determined periodicity. However, as would be apparent to those skilled in the art, the first magnetic field need not be formed by bar magnets but could be formed from a single magnet (or groups of magnets) such that the direction of magnetisation of the single magnet rotates around the magnetic axis.

The second difference between the first preferred embodiment and the second preferred embodiment is that the linkage **55** of the second preferred embodiment does not include a component for increasing the angular velocity of the rotor **12** above the average velocity of the rotor **12**. Accordingly, in the second preferred embodiment, a circular rotor sprocket **63** is used in place of the eccentric rotor socket **59**, thereby providing a constant rate of rotation of the rotor **12** about the rotor axis **16** as the armature **70** rotates about the stator **50'**.

As will be clear to those skilled in the art, the rotation of the direction of the first magnetic field around the circumferential line of demarcation **49** commutates the second magnetic field, overcoming the need for the null regions **78**. In all other respects, the operation of the second embodiment is the same as that of the first embodiment. That is, the revolution rate of each rotor **12** is related to the revolution rate of the armature **70** by **Equation (1)**, where the parameter **Ns** is the number of rotations around the line of demarcation **49** of the first magnetic field along the line of demarcation **49**. In the second preferred embodiment, as shown in **Fig.4**, the number of rotations of the first magnetic field is one. Accordingly, since there are three pairs **32**, **32'**, **32"** of U-shaped magnets **20**, each of the five rotors **12** makes one-third revolution for each full revolution of the armature **70** around the armature axis **58**. However, as will be appreciated by those skilled in the art, the motor **10** could be designed for the first magnetic field to have any number of whole periods of rotation about the armature axis **58** provided that the revolution rate of the rotors **12** was adjusted to conform to **Equation (1)**.

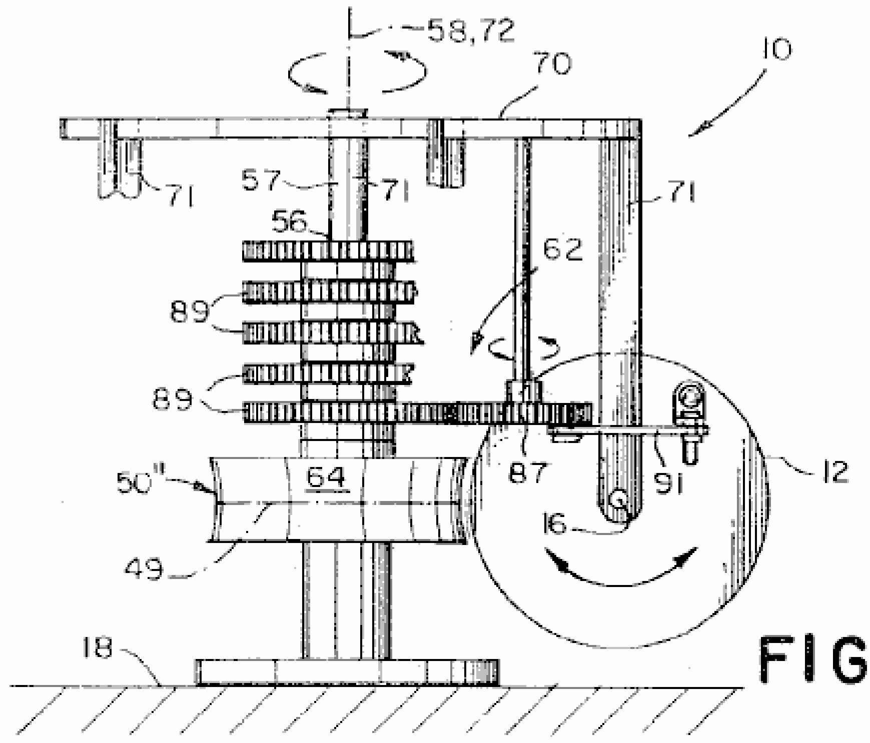

FIG.1C

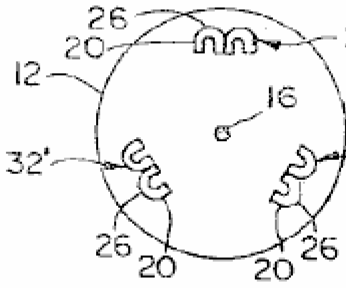

FIG. 2

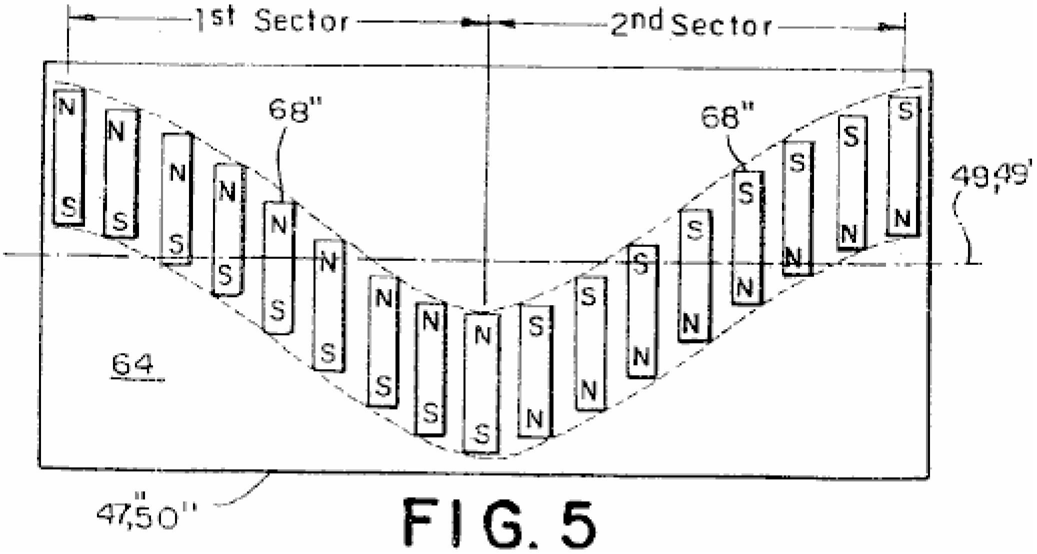

FIG. 5

Referring now to **Fig.1C**, **Fig.2** and **Fig.5** there is shown a third preferred embodiment of a motor **10** providing unidirectional rotational motive power. The third preferred embodiment comprises a generally circular stator **50"** mounted to a base **18** and having an axis **72**, with magnets **68"** attached to the surface **64** of the stator **50"**, an armature **70** attached to the stator **50"** by an axle **57** for rotation about an armature axis of rotation **58** coincident with the stator axis **12**, and five rotors **12** (for clarity, only one of which is shown) having three pairs **32**, **32'**, **32"** of abutted U-shaped magnets **20**, the rotors **12** being spaced at intervals of about **72** degrees around the armature **70**. Each rotor **12** is spaced from the armature by an armature strut **71** and attached to the armature strut **71** by an axle for rotation about an axis **16** of the rotor **12** in a plane generally aligned with the armature axis **58** about an axis **16** of the rotor **12**. The motor **10** further includes a driving linkage **62** connecting each rotor **12** and the stator **50** together to cause the armature **70** to rotate about the armature axis of rotation **58** as each rotor **12** oscillates about its respective rotor axis **16**.

The third preferred embodiment is identical to the first preferred embodiment except for three differences. First, instead of the first magnetic field being uniform in both magnitude and direction around the circumferential line of demarcation **49** (except in the null zone **78**), the first magnetic field is displaced by a sinusoidal pattern having a pre-determined peak amplitude and a pre-determined period along the circumferential line of demarcation **49**, with the direction of the first magnetic field alternating in opposite directions along the line of demarcation **49** between each peak amplitude of the sinusoidal pattern.

Preferably, as shown in **Fig.5** the first magnetic field is formed by a plurality of bar magnets **68''** arranged on the surface **64** of the stator **50''** so that the magnetisation of the bar magnets **68''** is displaced in the sinusoidal pattern from the line of demarcation **49** around the circumferential line of demarcation **49**. The sinusoidal pattern of the bar magnets **68''** is divided into first and second sectors, the boundary of which occurs at the peaks of the sinusoidal pattern. The direction of magnetisation of the bar magnets **68''** is opposite in direction in the first and the second sectors providing a commutation of the second magnetic field and causing the rotors **12** to reverse in rotational direction as the rotor **12** oscillates around the rotor axis **16** and rotates around the armature axis of rotation **58**.

Preferably, the sinusoidal pattern of the magnets has a predetermined peak amplitude so that each rotor **12** oscillates approximately +/-thirty (30) degrees from a neutral position. However, the value of the peak amplitude is not critical to the design of the motor **10**. Further, the predetermined period of the sinusoidal pattern may be selected to be any value for which the number of cycles of the sinusoidal pattern around the surface **64** of the stator **50''** is an integer value.

As will be apparent to those skilled in the art, the first magnetic field need not be formed by the bar magnets **68''** but could be formed from a single magnet (or groups of magnets) so that the first magnetic field would be sinusoidally displaced around the armature axis of rotation **58** and would alternate in opposite directions between each peak of the sinusoidal pattern. Further, as will be appreciated by those skilled in the art, the displacement of the first magnetic field need not be precisely sinusoidal. For instance the displacement may be in a shape of a sawtooth or in a shape having a portion with constant plus and minus amplitude values, within the spirit and scope of the invention.

As a result of the first magnetic field being sinusoidally displaced and alternating each one-half period, each rotor **12** oscillates through an angle corresponding to approximately the peak amplitude of the sinusoid as the rotor **12** follows the stator magnets **68''**. Accordingly, a second difference between the third embodiment and the first embodiment is in the structure of the linkage **62**. In the third preferred embodiment, shown in **Fig.1C**, the linkage **62** comprises a reciprocating rod **91** connecting each rotor **12** to a respective first gear **87** rotationally attached to the armature **70**. The reciprocating rod **91** is pivotally mounted to each rotor **12** and to each first gear **87** so that the oscillating motion of the rotor **12** is converted to rotary motion of the first gear **87**. Each first gear **87** is coupled to a single second gear **89**, attached to the stator **50** in a fixed position. The rotary motion of each first gear **87** causes the armature **70** to rotate about the armature axis of rotation **58** as the rotors **12** oscillate about the rotor axis **16**. As will be appreciated by those skilled in the art, the speed of the motor **10** is fixed by the ratio of the first gear **87** to the second gear **89** in accordance with the expression:

Sa = (1 / Ns) x Sr .... (2)

Where:
Ss is the angular velocity of the armature **70** (RPM);
Ns is the number of first magnetic field periods around the stator **50''**; and
Sr is the angular velocity of the rotor **12** (RPM).

Because each rotor **12** oscillates instead of continually rotating, only a single rotor magnet. (or group of magnets) on a given rotor **12** interacts with the single stator **50''**. Accordingly, a third difference between the third preferred embodiment and the first preferred embodiment arises because of the oscillatory motion of each rotor **12** whereby each rotor **12** of the third preferred embodiment has only a single pair of magnets **32**. However, as will be appreciated by those skilled in the art, additional stators **50''** may be added around the periphery of the rotors **12** and additional pairs of U-shaped magnets **20** may be included on each rotor 12 to interact magnetically with each additional stator **50''**, thus providing additional motive power.

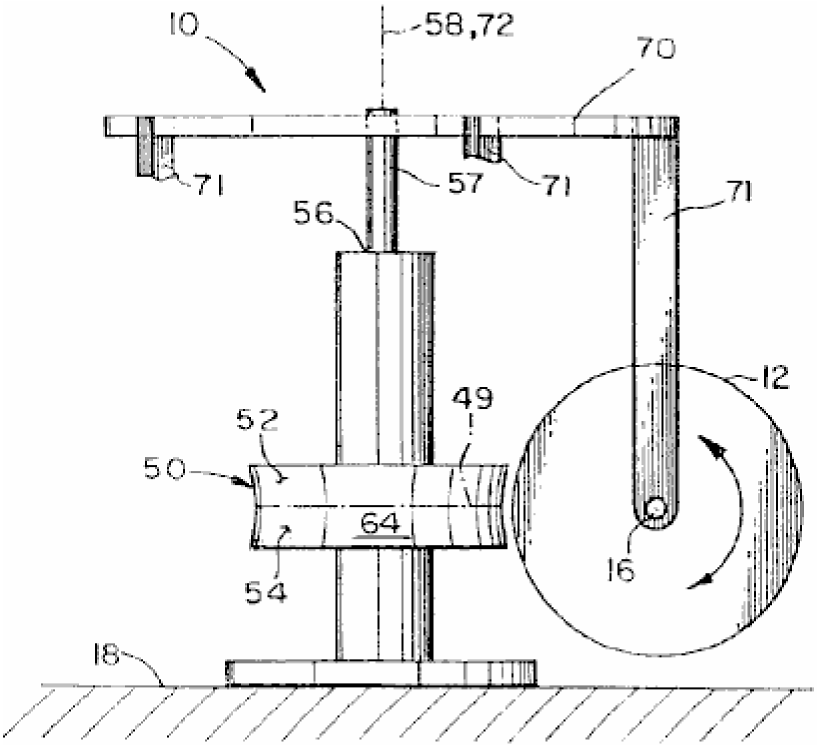

FIG.6

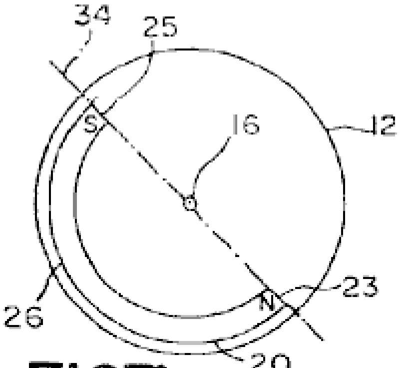

FIG7A

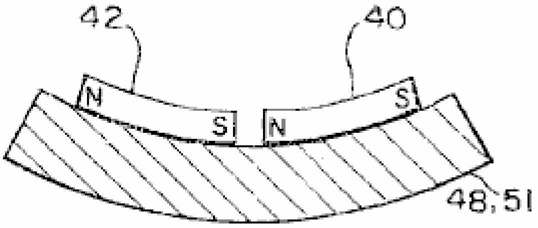

FIG. 8B

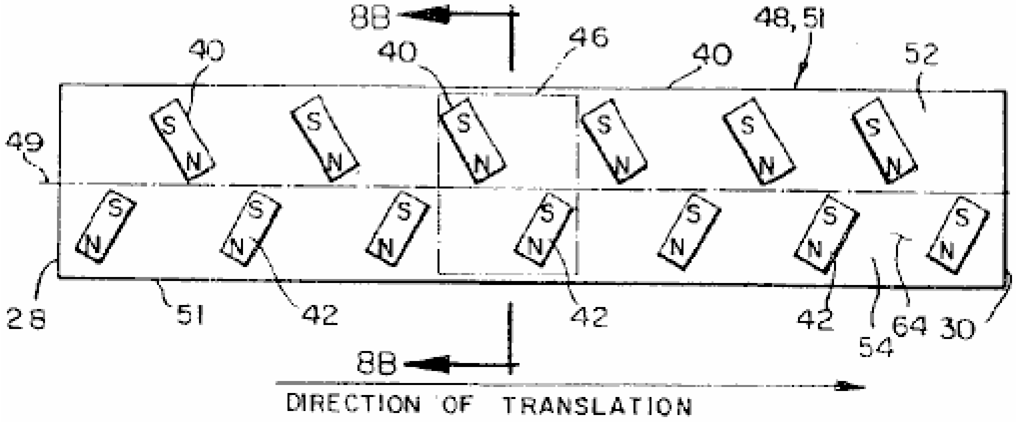

FIG. 8A

Referring now to **Figs. 6, 7A, 8A and 8B**, there is shown a fourth preferred embodiment of the permanent magnet motor **10** for providing unidirectional rotational motive power. The fourth preferred embodiment comprises a generally circular stator **51** having a stator axis **72**, attached to a base **18**. The stator **51** includes an outer surface **64** divided into a first side **52** and a second side **54** by a circumferential line of demarcation **49**, having a pre-determined direction around the stator axis **72**, at about a midpoint of the outer surface **64**.

Preferably, the surface **64** of the stator **51** is curved, having a curvature conforming to the arc of the rotors **12**. However, it will be appreciated by those skilled in the art that the surface **64** need not be curved but could be planar and still be within the spirit and scope of the invention. As will be appreciated by those skilled in the art the stator **51** is merely intended as a stationary supporting structure for stator magnets and, as such, the shape of the stator is not intended to be controlling of the size and shape of the air gap between the magnets attached to the stator and the magnets attached to the rotors.

As shown in **Fig.8A**, one or more pairs of stator magnets **46** are attached to the outer surface **64** spaced along the line of demarcation **49**. Each pair of stator magnets **46** comprises a first stator magnet **40** having a north pole and a south pole and a second stator magnet **42** having a north pole and a south pole. The south pole of each first stator magnet **40**, is located on the first side **52** of the outer surface **64**, and the north pole of the first stator magnet **40** is closest to the line of demarcation **49**. The north pole of each second stator magnet **42** is located on the second side **54** of the outer surface **64** and the south pole of each second stator magnet **42** being closest to the line of demarcation **49**. The first and the second stator magnets **40**, **42** are spaced along the line of demarcation **49** so that a first inter-magnet distance measured along the line of demarcation **49** between the north pole of the first stator magnet **40** and the south pole of the second stator magnet **42** of an adjacent pair of magnets **46** is generally equal to a second inter-magnet distance measured along the line of demarcation **49'** between the south pole of the first stator magnet **40** and the north pole of the second stator magnet **42**.

In the fourth preferred embodiment, the stator magnets **40**, **42** are bar magnets. Preferably, the north pole of each first stator magnet **40** and the south pole of each second stator magnet **42** are inclined toward the pre-determined direction. Also, the bar magnets are preferably oriented on the surface **64** of the stator **50** so that the south pole of each first magnet **40** and the north pole of each second magnet **42** are nearer to the periphery of each rotor **12** than the opposite polarity pole of each of the magnets **40**, **42**. As will be appreciated by those skilled in the art, the stator magnets **40**, **42** need not be bar magnets. For instance, each stator magnet **40**, **42** could be a U-shaped magnet, or could be made up of separate magnets, as long as the first magnetic field generated by the magnets was generally equivalent to that produced by the bar magnets.

In the fourth preferred embodiment, an armature **70** having an armature axis of rotation **58** coincident with the stator axis **72** is attached to the stator **51** by an armature axle **57**, which armature axle **57** allowing the armature **70** to freely rotate about the stator axis **72**. Each rotor **12** is spaced from the armature **70** by an armature strut **71** and is mounted to the armature strut **71** so as to be free to rotate about the rotor axis **16**. The rotor axis **16** is oriented so that the rotor **12** rotates in a plane generally aligned with the armature axis of rotation **58**. In the fourth preferred embodiment, five rotors **12** are attached to the armature **70**. Preferably, the rotors **12** are uniformly spaced around the circumference of the stator **50** with a spacing of the rotors **12** as measured at the surface **64** of the stator **51** about equal to an integer multiple of twice the inter-magnet distance. However, as those skilled in the art will appreciate, it is not necessary to have the rotors **12** uniformly spaced. Further, the number of rotors **12** can be as few as one and as large as size and space constraints allow. As will be appreciated by those skilled in the art, the stator axis **72** need not be coincident with the armature axis of rotation **58**. Accordingly, a stator **50** arranged around the armature axis **58** at any location at which the stator axis **72** is parallel to the armature axis **58** and the surface of the stator **50** faces the periphery of the rotors **12**, thereby providing for the interaction between the first magnetic field and the second magnetic field around the armature axis **58**, is within the spirit and scope of the invention.

Referring now to **Fig.7A**, each rotor **12** comprises a first U-shaped magnet **20** generating a second magnetic field. The first U-shaped magnet **20** is positioned on the rotor **12** so that the north pole and the south pole of the first U-shaped magnet **20** faces toward the axis **16** of the rotor **12**, and the rear side **26** of the first U-shaped magnet **20** faces the periphery of the rotor **12**. When the rear **26** of the first U-shaped magnet **20** is adjacent to the north pole of one of the first stator magnets **40** along the line of demarcation **49**, a portion of the second magnetic field directly adjacent to the rear **26** of the first U-shaped magnet **20** interacts with a portion of the first magnetic field generated by the north pole of the first stator magnet **40** to cause the rotor **12** to rotate in a counterclockwise direction. As the rotor **12** rotates in the counterclockwise direction, a portion of the second magnetic field associated with the south pole of the first U-shaped magnet **20** interacts with a portion of the first magnetic field associated with the south pole of the first stator magnet **40**, giving rise to a force in the direction of the rotor axis **16**, repelling the U-shaped magnet **20**, and causing the rotor **12** to translate in the pre-determined direction around the stator axis. As the rotor **12** moves away from first stator magnet **40** in the pre-direction the second magnetic field adjacent to the rear **26** of the U-shaped magnet **20** interacts with the portion of the first magnetic field associated with the south pole of the second stator magnet **42** of the pair of magnets **46**, causing the rotor **12** to reverse direction and rotate in the clockwise direction. The portion of the second magnetic field associated with the north pole of the U-shaped magnet **20** then interacts with the portion of the first magnetic field associated with the north pole of the second stator magnet **42**, again giving rise to a force in the direction of the rotor axis **16**, repelling the U-shaped magnet **20** and causing the rotor **12** to translate in the pre-determined direction. An oscillation cycle is then repeated with the second magnetic field of the rotor **12** interacting with the first magnetic field of the adjacent pair of magnets **46**. Accordingly, the rotor **12** rotationally oscillates about the respective rotor axis **16** and generates a force in the direction of the rotor axis **16**, causing the armature **70** to rotate in the pre-determined direction around the armature axis of rotation **58** to provide the unidirectional rotational motive power of the motor. As would be appreciated by those skilled in the art, the fourth embodiment is not limited to a single stator **51** and a single U-shaped magnet **20**. Additional stators having first and second stator magnets **40**, **42** arranged identically to the stator **51** to interact with corresponding U-shaped magnets spaced around the periphery of each rotor are with in the spirit and scope of the invention.

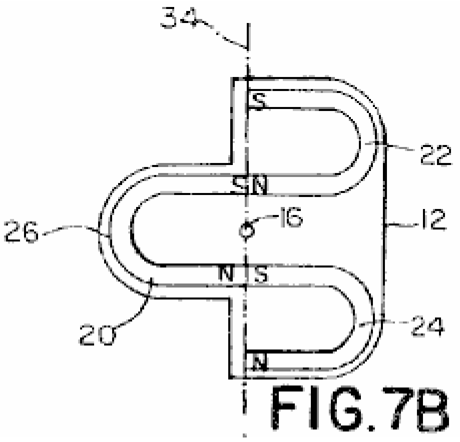

FIG.7B

Referring now to **Fig.6**, **Fig.7B** and **Fig.8A** there is shown a fifth preferred embodiment of the permanent magnet motor **10** for providing unidirectional rotary motive force. The structure and operation of the fifth preferred embodiment is similar to that of the fourth preferred embodiment except that each rotor **12** further includes a second U-shaped magnet **24** having a north pole and a south pole with the south pole of the second U-shaped magnet **24** abutting the north pole of the first U-shaped magnet **20**, and a third U-shaped magnet **22** having a north pole and a south pole, with the north pole of the third U-shaped magnet **22** abutting the south pole of the first U-shaped magnet **20**. As the rotor **12** rotates due to interaction of the portion of the second magnetic field adjacent to the rear of the U-shaped magnet **20** with the first magnetic field, a third magnetic field generated by the north pole of the second U-shaped magnet **24** and a fourth magnetic field generated by the south pole of the third U-shaped magnet **22** each interact with the first magnetic field generated by each stator magnet pair **46** to cause each rotor **12** to generate a force in the direction of the rotor axis **16**, thereby causing the armature **70** to rotate in the pre-determined direction around the axis **58** of the stator **51** to provide the unidirectional rotational motive power of the motor.

In the fifth preferred embodiment, the portion of the second magnetic field adjacent to the rear **26** of the first U-shaped magnet **20** serves to rotate the rotor **12** while the second and third U-shaped magnets **24**, **22** generate the magnetic fields providing the force in the direction of the rotor axis **16**. Accordingly, the fifth preferred embodiment is potentially more powerful than the fourth preferred embodiment. As will be appreciated by those skilled in the art, the stator magnets **40**, **42** need not be bar magnets. For instance, each stator magnet **40**, **42** could be replaced by a U-shaped magnet or could be made up of separate magnets, as long as the first magnetic field generated by the magnets was generally equivalent to that produced by the bar magnets.

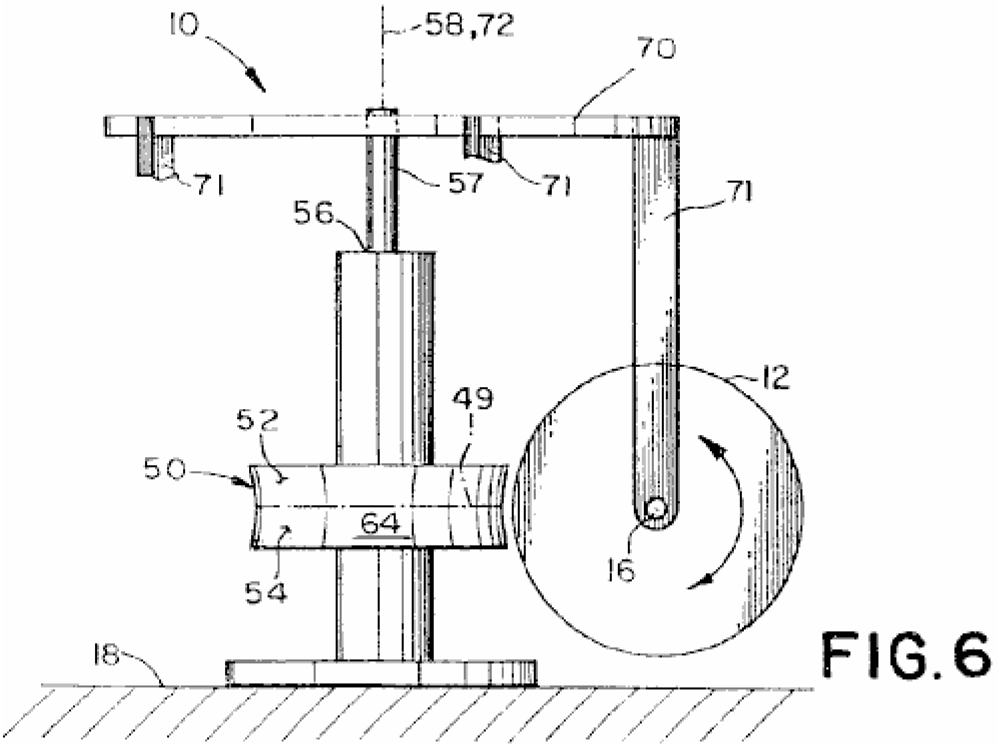
10
58,72
70
71
57
71
71
56
12
49
52
50
64
16
54
18

FIG. 6

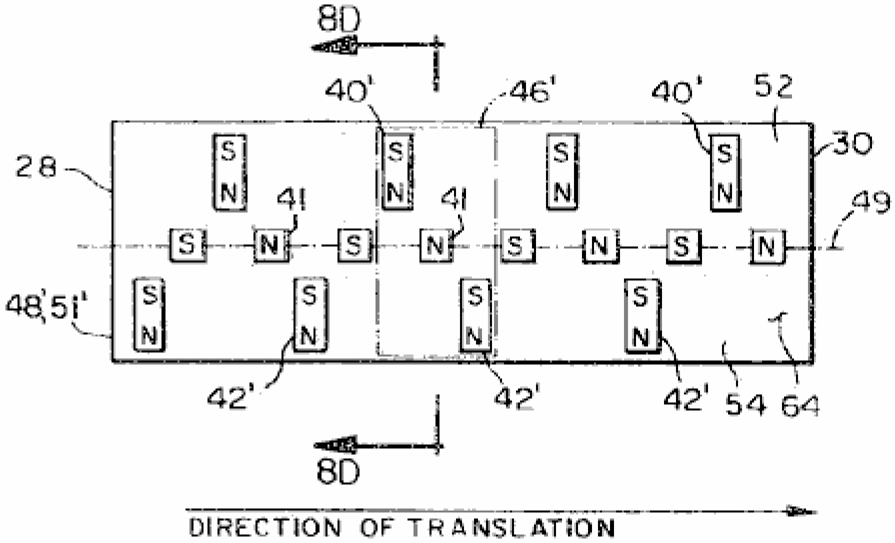
8D
40'
46'
40'
52
30
28
S
N
41
41
49
48,51'
42'
42'
42'
54
64
8D
DIRECTION OF TRANSLATION

FIG. 8C

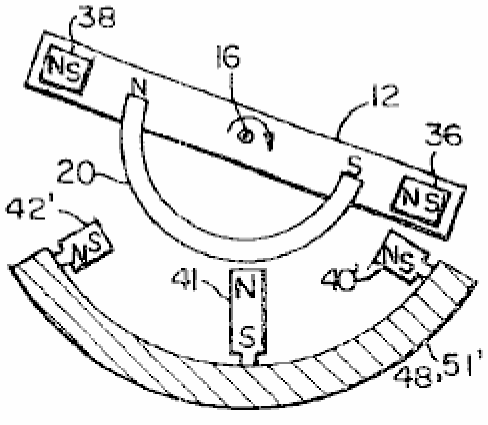

FIG. 8D

Referring now to **Fig.6** and **Fig.8C** and **Fig.8D** there is shown a sixth preferred embodiment of the motor **10**. The structure and operation of the sixth preferred embodiment is identical to that of the fifth preferred embodiment except that:
(1) The stator magnets **40'**, **42'** on the surface **64** of the stator **51'** are in a slightly different orientation;
(2) an additional stator magnet **41** is added to each pair of stator magnets **46** and
(3) the U-shaped magnets **22**, **24** attached to each rotor **12** are replaced with bar magnets **36**, **38**.

Specifically, and referring now to **Fig.8C**, the direction of magnetisation of each first stator magnet **40'** and each second stator magnet **42'** is aligned to be generally perpendicular to the line of demarcation **49** instead of being inclined in the pre-determined direction around the armature axis of rotation **58** as in the fifth embodiment. Also, the stator **51'** also includes a third stator magnet **41** mounted on the outer surface **64** along the line of demarcation **49** mid-way between each first stator magnet **40'** and each second stator magnet **42'**. As shown in **Fig.8C** and **Fig.8D**, the third stator magnet **41** is oriented so that the direction of magnetisation of the third magnet **41** is aligned with the axis **16** of the rotors **12**.

As shown in **Fig.8C** and **Fig.8D**, the rotor **12** used in the sixth preferred embodiment includes a first U-shaped magnet **20**, similar to that of the fifth preferred embodiment. However, in place of the second and the third U-shaped magnets **24**, **22** used in the fifth preferred embodiments, the sixth preferred embodiment includes a first thruster bar magnet **36**, spaced from and proximate to the south pole of the first U-shaped magnet **20** and generally aligned with a thruster magnet axis **34**, and a second thruster bar magnet **38**, spaced from and proximate to the north pole of the first U-shaped magnet **20** and also generally aligned with the thruster magnet axis **34**. The thruster axis **34** lies in the plane of the rotor **12** and intersects the rotor axis **16**. Similar to the fifth preferred embodiment, the interaction of the portion of the second magnetic field directly adjacent to the rear of the U-shaped magnet **20** with the first magnetic field provides the rotational force for the rotors **12**. As the rotor **12** rotates in the clockwise direction (viewed from the second end **30** of the stator **51'**), a third magnetic field generated by both the north pole and the south pole of the second thruster magnet **36** interacts with the first stator magnet **40'**, again generating a force in the direction of the rotor axis **16**. Similarly, when the rotor **12** rotates in the counterclockwise direction a fourth magnetic field generated by both the north pole and the south pole of the first thruster magnet **38** interacts with second stator magnet **42'**, generating a force in the direction of the rotor axis **16**. The result of the force in the direction of the rotor axis **16** is to cause the armature **70** to rotate in the predetermined direction around the armature axis of rotation **58** to provide the unidirectional rotational motive power of the motor **10**.

In the sixth preferred embodiment, the stator magnets **40'**, **41**, **42'** and the thruster magnets **36**, **38** are bar magnets. However, as will be appreciated by those skilled in the art, the stator magnets **40'**, **41 42'** and the thruster magnets **36**, **38** need not be bar magnets. For instance, each stator magnet **40'**, **42'** could be a U-shaped magnet or could be made up of separate magnets, as long as the first magnetic field generated by the magnets was generally equivalent to that produced by the bar magnets.

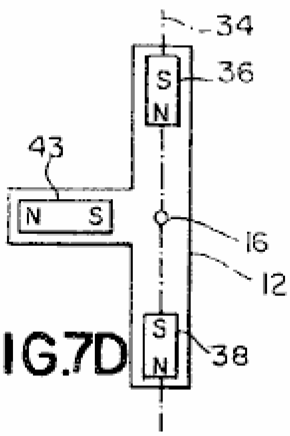

FIG.7D

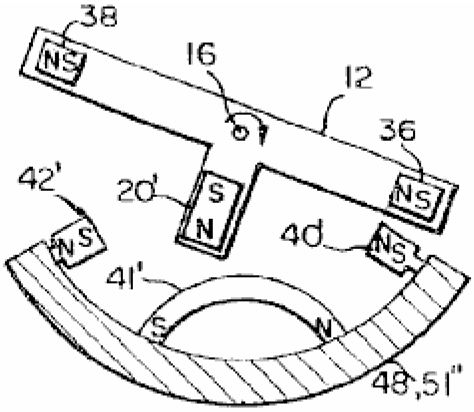

FIG. 8E

Referring now to **Fig.6**, **Fig.7D** and **Fig.8E** there is shown a seventh preferred embodiment of the motor **10**. The structure and operation of the seventh preferred embodiment is similar to the sixth preferred embodiment except that the third stator magnet **41'** located on the surface **64** of the stator **51''** along the line of demarcation **49** is a U-shaped magnet **41'** with the rear of the U-shaped magnet **41'** facing the rotor **12** and the direction of magnetisation being perpendicular to the line of demarcation **49**; and the U-shaped magnet **20** is replaced with a bar magnet **20'** oriented to have the direction of magnetisation aligned with a radial line of the rotor **12**. As in the sixth preferred embodiment, each stator magnet **40'**, **42'** could be a U-shaped magnet or could be made up of separate magnets, as long as the first magnetic field generated by the stator magnets **40'**, **42'** was generally equivalent to that produced by the bar magnets.

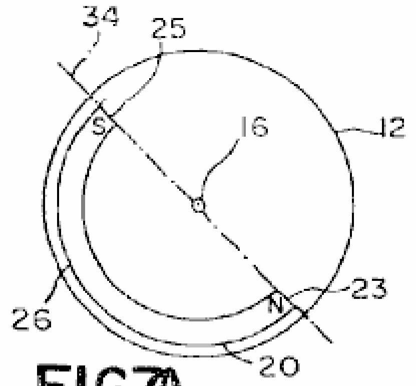

FIG7A

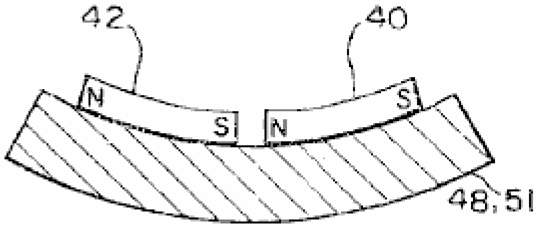

FIG. 8B

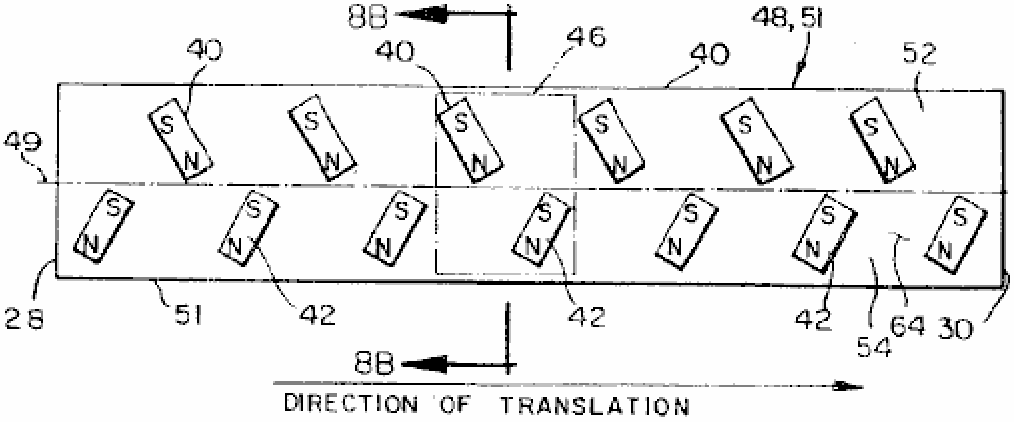

FIG. 8A

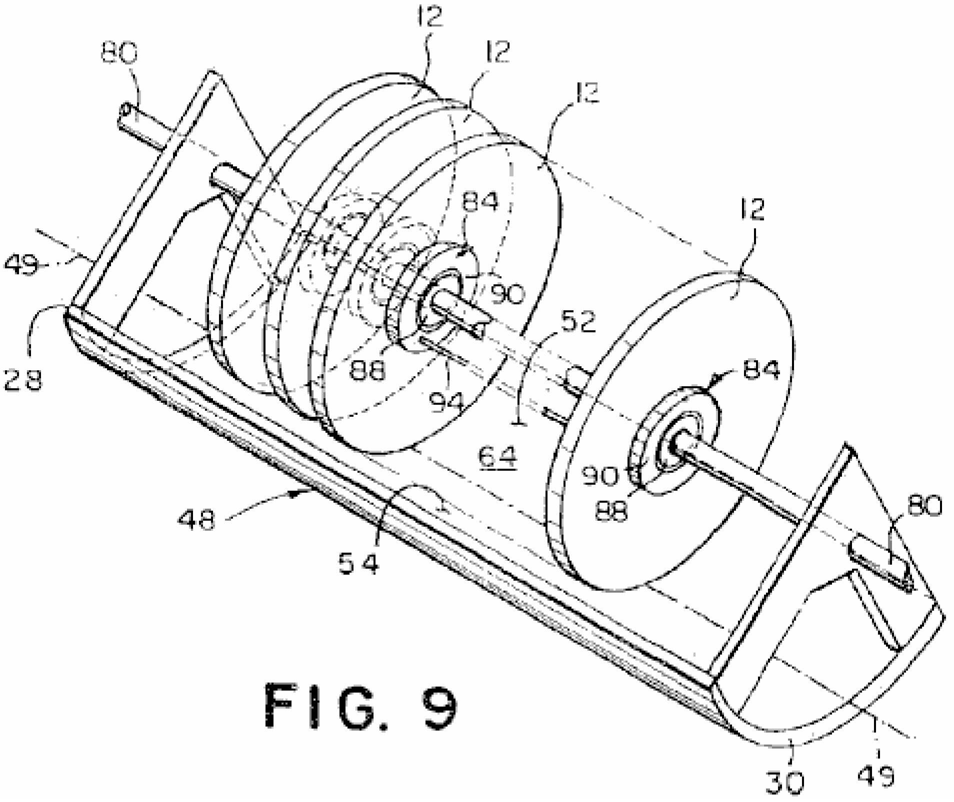

FIG. 9

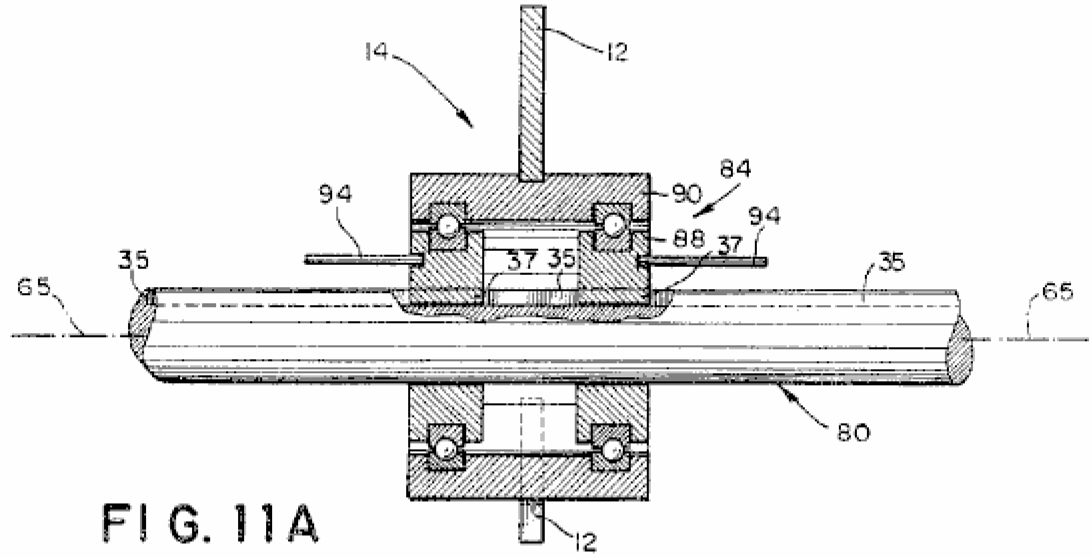

FIG. 11A

Referring now to **Fig.7A**, **Fig.8A**, **Fig.8B**, **Fig.9** and **Fig.11A**, there is shown an eighth preferred embodiment of the motor **10** for providing unidirectional linear motive power. The eighth preferred embodiment comprises a linear stator **48** having a generally curved cross-section perpendicular to a longitudinal line of demarcation **49** extending on a surface **64** of the stator between a first end **28** and a second end **30** and dividing the surface **64** of the stator **48** into a first side **52** and a second side **54**. Preferably, the generally curved cross-section of the stator **48** is concave. However, it will be appreciated by those skilled in the art that the cross-section need not be concave but could be planar or even convex and still be within the spirit and scope of the invention.

The linear stator **48** is identical to the generally circular stator **51** except for the surface **64** of the stator **48** being linear in the direction of the line of demarcation **49** instead of being circular in the direction of the line of demarcation **49**.

The eighth preferred embodiment includes the first and the second stator magnets **40**, **42** (see **Fig.8A**), the location and orientation of which are virtually identical to the orientation and location of the stator magnets **40**, **42** on the circular stator **51**. Accordingly, attached to the linear stator **48** is one or more pairs of magnets **46**, each pair of stator magnets **46** generating a first magnetic field and comprising a first stator magnet **40** having a north pole and a south pole and a second stator magnet **42** having a north pole and a south pole. The south pole of each first stator magnet **40**, is located on the first side **52** of the outer surface **64**, with the north pole of the first stator magnet **40** being closest to the line of demarcation **49**. The north pole of each second stator magnet **42** is located on the second side **54** of the outer surface **64** with the south pole of each second stator magnet **42** being closest to the line of demarcation **49**. The first and the second stator magnets **40**, **42** are spaced along the line of demarcation **49** so that a first inter-magnet distance measured along the line of demarcation **49** between the north pole of the first stator magnet **40** and the south pole of the second stator magnet **42** of an adjacent pair of magnets **46** is generally equal to a second inter-magnet distance measured along the line of demarcation **49** between the south pole of the first stator magnet **40** and the north pole of the second stator magnet **42**.

In the eighth preferred embodiment, the stator magnets **40**, **42** are bar magnets, the north pole of each first stator magnet **40** and the south pole of each second stator magnet **42** being inclined toward the second end **30** of the linear stator **48**. Also, as shown in **Fig.8A**, the stator magnets **40**, **42** are oriented on the surface **64** of the stator **51** so that the south pole of each first magnet **40** and the north pole of each second magnet **42** are nearer to the periphery of each rotor **12** than the opposite polarity pole of each of the stator magnets **40**, **42**. As will be appreciated by those skilled in the art, the stator magnets **40**, **42** need not be bar magnets. For instance, each stator magnet **40**, **42** could be a U-shaped magnet or could be made up of separate magnets, as long as the first magnetic field generated by the magnets was generally equivalent to that produced by the bar magnets.

The eighth preferred embodiment also includes rail **80** having a longitudinal axis located generally parallel to the line of demarcation **49** of the stator **48**. Five rotor assemblies **14** comprising a rotor **12** and a bearing assembly **84** are slidably attached to the rail **80**.

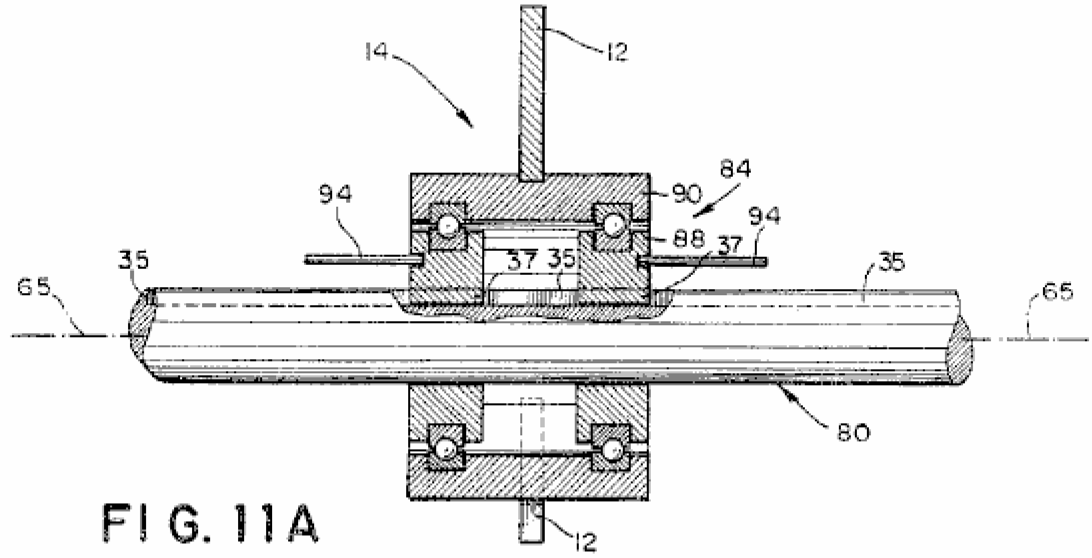

FIG. 11A

Preferably, the bearing assembly **84**, as shown in **Fig.11A**, includes a pair of first bearings **88** slidably mounted to the rail **80** and constrained to slide along the rail without any substantial rotation, by a boss **37** in each first bearing **88**, which is keyed to a longitudinal groove **35** on the rail **80**. A second bearing **90** is connected for rotation to the pair of first bearings **88** by ball bearings. The rotor **12** is attached to the second bearing **90**. Thus, the rotor **12** attached to each bearing assembly **84** is free to oscillate rotationally about the rail **80** and to generate a force along the rail **80** in the direction of the second end of the stator **30**.

Preferably, the eighth preferred embodiment includes a cross-link **94** which ties each bearing assembly **84** together by connecting together the first bearings **88** of each bearing assembly **84**, thereby adding together the linear motion along the rail **80** of each rotor **12**.

Preferably, each rotor **12** comprises one or more one rotor magnets **20**, each rotor magnet **20** generating a second magnetic field which interacts with the first magnetic field to cause the rotor **12** to oscillate rotationally about the axis of the rail **80** and to generate a force in the direction of the axis of the rail **80** to provide the unidirectional linear motive power of the motor. In the eighth preferred embodiment, each rotor **12** is substantially identical to the rotor **12** described for the fourth preferred embodiment. Accordingly, each rotor magnet comprises a first U-shaped magnet **20** having a north pole, a south pole and a rear side **26**, a first portion of the second magnetic field directly adjacent to the rear **26** of the U-shaped magnet **20** interacting with each first magnetic field to cause each rotor **12** to oscillate rotationally about the rail **80**. A second portion of the second magnetic field adjacent to the north and the south poles of the first U-shaped magnet **20** interacts with the first magnetic field to cause the rotor **12** to generate a force in the direction of the axis of the rail **80** thereby providing the unidirectional linear motive power of the motor. As would be clear to those skilled in the art, the operation of the eighth preferred embodiment is identical to that of the fourth preferred embodiment except that the motion of the cross-linked rotors **12** is linear along the rail **80** instead of being rotational about the armature axis of rotation **58**. Accordingly, for the sake of brevity, a description of the operation of the eighth preferred embodiment is not repeated.

Referring now to **Fig.7B**, **Fig.8A**, **Fig.8B**, **Fig.9** and **Fig.11A** there is shown a ninth preferred embodiment of the motor **10** for providing unidirectional linear motive power. As would be apparent to those skilled in the art, the structure and the operation of the ninth preferred embodiment is virtually identical to that of the fifth preferred embodiment except that the motion of the cross-linked rotors **12** is linear instead of rotational about the armature axis of rotation **58**. Accordingly, for the sake of brevity, a description of the structure and the operation of the ninth preferred embodiment is not repeated.

Referring now to **Figs. 7C, 8C, 8D, 9 and 11A** there is shown a tenth preferred embodiment of the motor **10** for providing unidirectional linear motive power. As would be apparent to those skilled in the art, the structure and the operation of the tenth preferred embodiment is virtually identical to that of the sixth preferred embodiment except that the motion of the cross-linked rotors **12** is linear instead of rotational about the armature axis of rotation **58**. Accordingly, for the sake of brevity, the operation of the tenth preferred embodiment is not repeated.

Referring now to **Figs. 7D, 8C, 8E, 9 and 11A** there is shown an eleventh preferred embodiment of the motor **10** for providing unidirectional linear motive power. The structure and operation of the eleventh preferred embodiment is virtually identical to the seventh preferred embodiment except that the motion of the cross-lined rotors **12** is linear instead of rotational about the armature axis of rotation **58**. Accordingly, for the sake of brevity, the operation of the tenth preferred embodiment is not repeated.

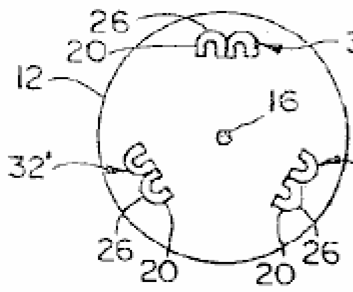

FIG. 2

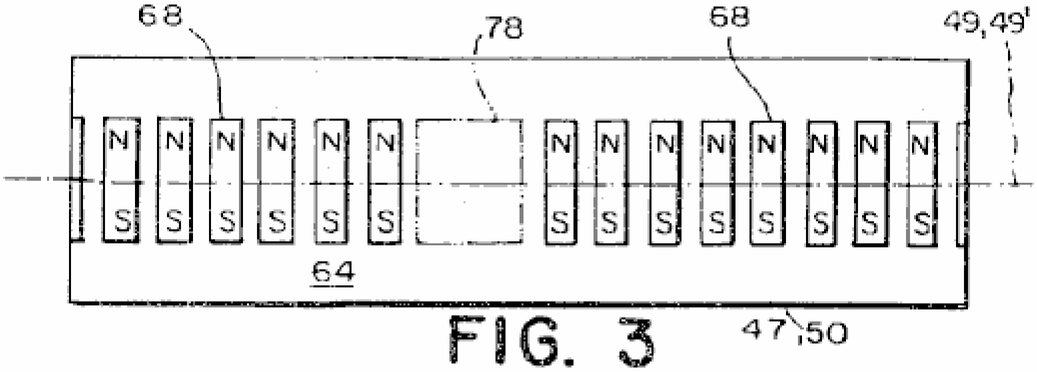

FIG. 3

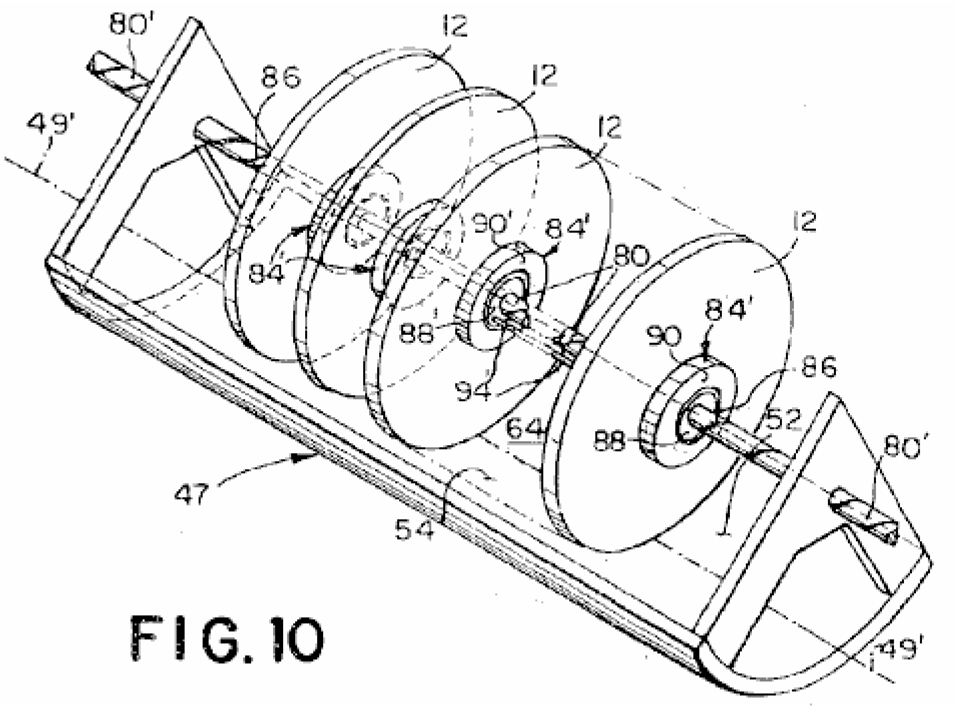

FIG. 10

Referring now to **Fig.2**, **Fig.3**, **Fig.10** and **Fig.11B**, there is shown a twelfth preferred embodiment of the motor **10** for providing linear motive power. As shown in **Fig.10**, the twelfth preferred embodiment comprises a linear stator **47** having a generally curved cross-section perpendicular to a line of demarcation **49'** extending along a midpoint of the stator **47** between a first end **28** and a second end **30** of the linear stator **47**, a rail **80'** connected to the linear stator **47** having an axis generally parallel to the line of demarcation **49'**, one or more rotor assemblies **14'** comprising rotors **12** connected to the rail **80'** by a bearing assembly **84'**, and a cross-link **94'** connecting together the linkages **84'** of adjacent rotors **12**. Preferably, the generally curved cross section of the stator **47** is concave, having a curvature conforming to the arc of the rotors **12**. However, it will be appreciated by those skilled in the art that the generally curved cross-section need not be concave but could be planar or even convex and still be within the spirit and scope of the invention.

As shown in **Fig.3**, the linear stator **47** includes one or more magnets **68** arranged on the surface **64** of the linear stator **47**, each magnet **68** having a direction of magnetisation directed at about a right angle to the line of demarcation **49'** and resulting in a first magnetic field directed generally at a right angle to the line of demarcation **49'**. The magnitude of the first magnetic field is generally uniform except in the null region **78**, in which the magnitude of the first magnetic field is substantially reduced. The linear stator **47** of the twelfth preferred embodiment is virtually identical to the circular stator **50** of the first preferred embodiment except the linear stator **50** is linear in the direction of the line of demarcation **49'** instead of being circular around the armature axis of rotation **58**. Also, the arrangement of the magnets **68** on the surface **64** of the stator **47** and the structure of the null region(s) **78** is the same as for the first preferred embodiment, as shown in **Fig.3** and as fully described in the discussion of the first embodiment. Accordingly, for the sake of brevity, a more detailed description of the structure of the linear stator **47** is not repeated.

The rotors **12** of the twelfth preferred embodiment each have an axis of rotation **16** which is aligned with an axis of the rail **80'**. The rotors **12** are connected to the rail **80'** by the bearing assembly **84'** so that each rotor **12** is free to rotate about the rail **80'** and to slide along the rail **80'.** Preferably, as shown in **Fig.2**, each rotor **12** includes three pairs of U-shaped magnets **32, 32, 32'**, each U-shaped magnet having a rear side **26** and generating a second magnetic field. A portion of the second magnetic field adjacent to the rear-side **26** of each U-shaped magnet **20** interacts with the first magnetic field to cause each rotor **12** to rotate about the axis of the rail **80**. The rotors **12** of the twelfth preferred embodiment are the same as the rotors in the first preferred embodiment, as described in **Fig.2** and fully discussed above. Accordingly, for the sake of brevity, the detailed description of the rotors **12** is not repeated.

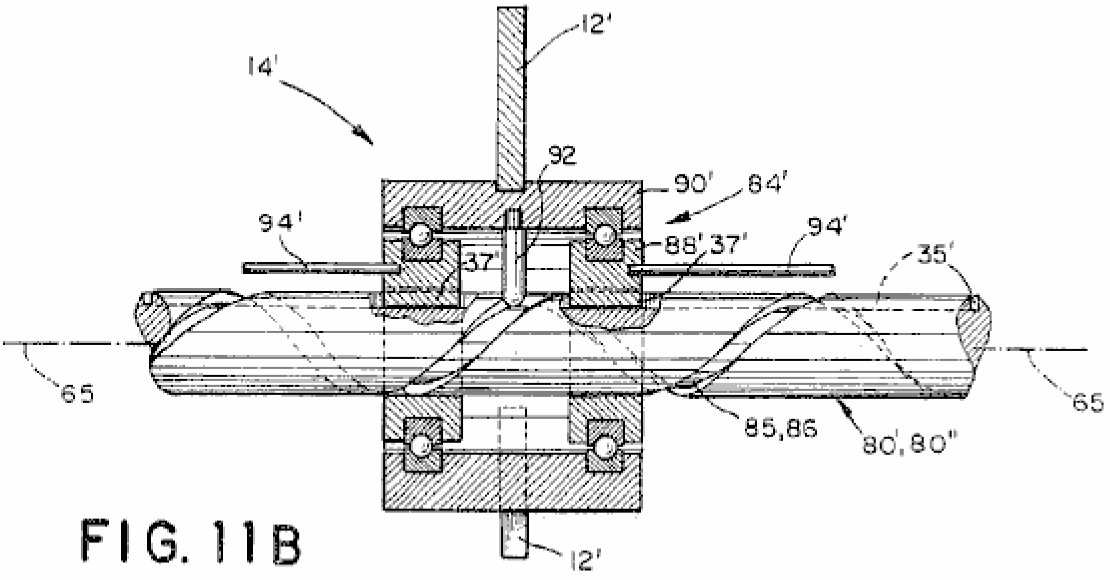

FIG. 11B

As shown in **Fig.11B**, the rail **80'** has a helical groove **86** with a pre-determined pitch (i.e., turns/unit length) running around a periphery of the rail **80'**. The bearing assembly **84'** connects each rotor **12** to the helical groove **86**, converting the rotational motion of each rotor **12** around the rail **80'** to the linear motion along the rail **80'**. As shown in **Fig.11B**, the bearing assembly **84'** comprises a pair of first bearings **88'** mounted to the rail **80'** and constrained to slide along the rail **80'** without any substantial rotation, and a second bearing **90'**, mounted to an outer surface the first bearing **88'** for receiving the rotor **12**. Preferably, each first bearing **88'** has a boss **37** which engages a longitudinal groove **35** so that each first bearing **88'** slides on the rail **80'** without rotation as the second bearing **90'** rotates on the first bearings **88'**. It will be appreciated by those skilled in the art, other methods for securing the first bearings **88'** to the rail **80'** could be employed, as for instance, by making the cross-section of the rail **80'** oblate (flattened at the poles). As in the first preferred embodiment, each rotor **12** must rotate at a rate which results in the rear of each U-shaped magnet **20** on the rotor **12** passing through one of the null regions **78** each full rotation of the rotor **12**. Accordingly, the pre-determined pitch of the helical groove **86** on the rail **80'** preferably equals:

Pg = (1 / Nr) x Pr .... (3)

Where:
Pr = the pitch of the null regions **78** (null regions/unit length);
Nr = the number of U-shaped magnets (or groups of abutted U-shaped magnets) on a rotor **12**; and
Pg = the pitch of the helical groove **86** (revolutions/unit length).

Preferably, the portions of the helical groove **86** corresponding to each null region **78** have an instantaneous pitch which is greater than the pre-determined pitch of the groove **86** for increasing the angular velocity of the each rotor **12** as each one of the pairs **32, 32', 32"** of U-shaped magnets **20** passes through one of the null regions **78**. However, as will be appreciated by those skilled in the art, it is not necessary to provide the greater instantaneous pitch in order for the motor **10** to provide motive power.

As described above, the cross-link **94'** connects the bearing assembly **84'** of adjacent rotors **12** together. As shown in **Fig.10**, the cross-link **94'** connects the first bearings **88'** of each bearing assembly **84'** to the first bearing **88'** of the adjacent bearing assemblies **84'** so that the linear motion of all the rotor assemblies **14'** are added together to provide the unidirectional linear motive power of the motor **10**.

As previously stated, the first preferred embodiment of the motor **10** comprises a single null region **78** and five rotors **12**, each rotor **12** having three pairs **32, 32', 32"** of abutted U-shaped magnets **20**. Preferably, the rotors **12** are uniformly spaced along the rail **80'** and the pairs **32, 32', 32"** of U-shaped magnets **20** are uniformly spaced around the periphery of each respective rotor **12**. Further, the pairs **32, 32', 32"** of U-shaped magnets **20** are phased with respect to each rotor **12** by one-fifth of a revolution of the rotor **12** so that the pairs **32, 32', 32"** of U-shaped magnets **20** of all the rotors **12** pass through the null region **78** at a substantially uniform rate to provide a more or less continuous interaction between the first magnetic field and the second magnetic field of the rotors **12**, resulting in a more or less continuous urging of the rotor assemblies **14'** toward the second end of the stator **47**. As will be appreciated by those skilled in the art, the motive power provided by the motor **10** is proportional to the number of rotors **12** and the number of U-shaped magnets **20** on each rotor **12**. Accordingly, the number of rotors **12** and the number of pairs **32, 32', 32"** of magnets **20** of the present invention are not limited to five rotors

12 and three pairs **32** of U-shaped magnets **20**. Neither is the number of null regions limited to one. The number of U-shaped magnets **20** and null regions **78** are limited only by adherence to the rule established by **Equation 3**.

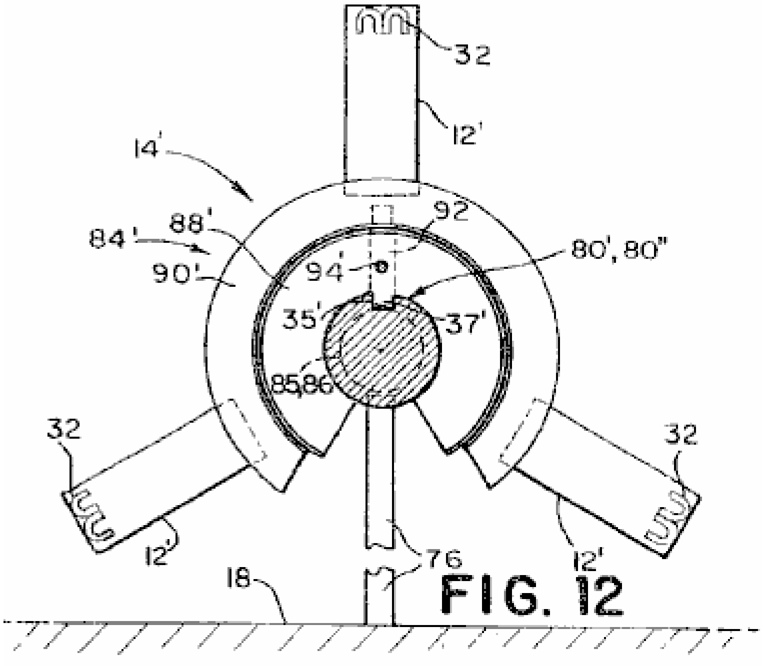

FIG. 12

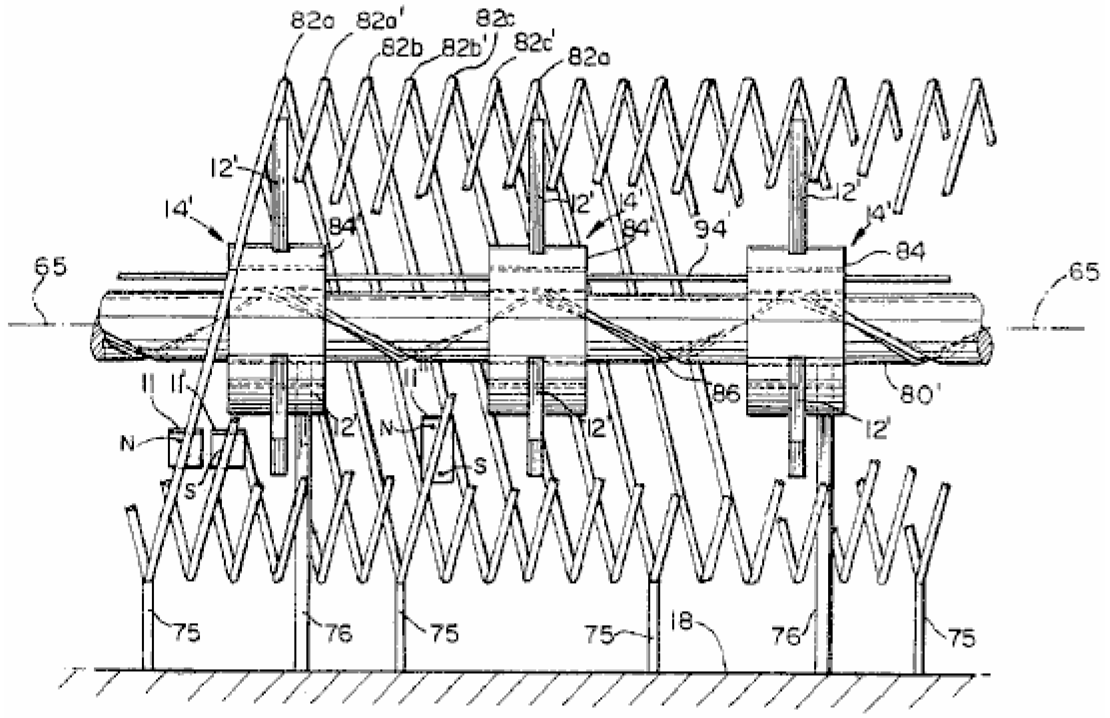

FIG. 13

Referring now to **Fig.2**, **Fig.11B**, **Fig.12** and **Fig.13** there is shown a thirteenth preferred embodiment of the motor **10** comprising a rail **80'** supported by rail mounting posts **76** and having a longitudinal axis **65**. A helical groove **86** having a pre-determined pitch runs around a periphery of the rail **80**.

The thirteenth preferred embodiment also includes three first helical stators **82a, 82b, 82c** (**82**) concentrically surrounding the rail **80'** corresponding to three pairs **32, 32' 32"** of U-shaped magnets **20** mounted on each of five rotors **12**. Preferably, the first helical stators **82** have the same pitch as the pre-determined pitch of the groove **86** and a longitudinal axis generally parallel to the axis **65** of the rail **80'**. A plurality of first stator magnets **11** having a direction of magnetisation aligned with a radial line of each rotor **12** are spaced along each first helical stator **82** with the first stator magnets **11** generating a first magnetic field.

The thirteenth preferred embodiment further includes plurality of second helical stators **82a', 82b', 82c'** (**82'**) alternating with the first helical stators **82'** along the axis **65** of the rail **80'**, and having the pre-determined pitch of the groove **86**. Each second helical stator **82'** has mounted upon it a plurality of second stator magnets **11'** having a direction of magnetisation aligned with a radial line of the rotor **12** and having a direction of magnetisation opposite in direction to the first stator magnets **11** mounted on each of the first helical stators **82**. As a consequence of the second helical stators **82'** being located midway between the first helical stators **82**, a point at about a midpoint between each rotor magnet pair **32, 32', 32''** is apposite to one of the second helical stators **82'** as each rotor **12** rotates about the axis **65** of the rail **80'** and slides along the rail **80'**.

The thirteenth preferred embodiment also includes five rotors **12**, (for clarity, only three are shown), having an axis of rotation **16** generally aligned with the longitudinal axis **65** of the rail **80'**. Each rotor **12** is connected to the rail **80'** by a bearing assembly **84'** so that the rotor **12** is free to rotate about the axis **65** of the rail **80'** and slide along the rail **80'**. Preferably, each rotor **12** includes three pairs **32, 32', 32''** of U-shaped magnets **20** wherein each U-shaped magnet **20** generates a second magnetic field, a portion of which adjacent to a rear **26** of the pair of U-shaped magnets **20** interacts with the first magnetic field of each first stator magnet to cause each rotor **12** to rotate about the axis **65** of the rail **80'**.

The bearing assembly **84'** (shown in detail in **Fig.11B** and **Fig.12**) connects each rotor **12** to the helical groove **86** around the periphery of the rail **80**. The bearing assembly **84'** is similar to the bearing assembly **84'** described in the twelfth preferred embodiment except for the openings in the first bearings **88'** and in the second bearing **90'** which allow the bearing assembly **84'** past the rail mounting posts **76** as the bearing assembly **84'** moves along the rail **80'**.

The thirteenth preferred embodiment may be constructed as either a linear motor or a rotary motor. In the case of the linear motor, the axes of the rail **80'** and of each helical stator **82** are substantially straight. The rail **80'** is supported on the base **18** by rail mounting posts **76** placed at intervals along the rail **80'**. The posts **76** are situated at locations along the rail **80'** at which the rotation of the rotor **12** orients the openings in the first and second bearings **88'**, **90'** to correspond to the mounting posts **76**. Each helical stator **82a, 82b, 82c** is supported on the base by stator mounting posts **75**. The rotors **12** are connected together by a cross-link **94'** which connects the first bearings **88'** of each bearing assembly **84'** to the first bearing **88'** of the bearing assembly **84'** of an adjacent rotor **12**. In this manner, the rotational motion of each rotor assembly **14'** is added together to provide the linear motive power of the linear motor.

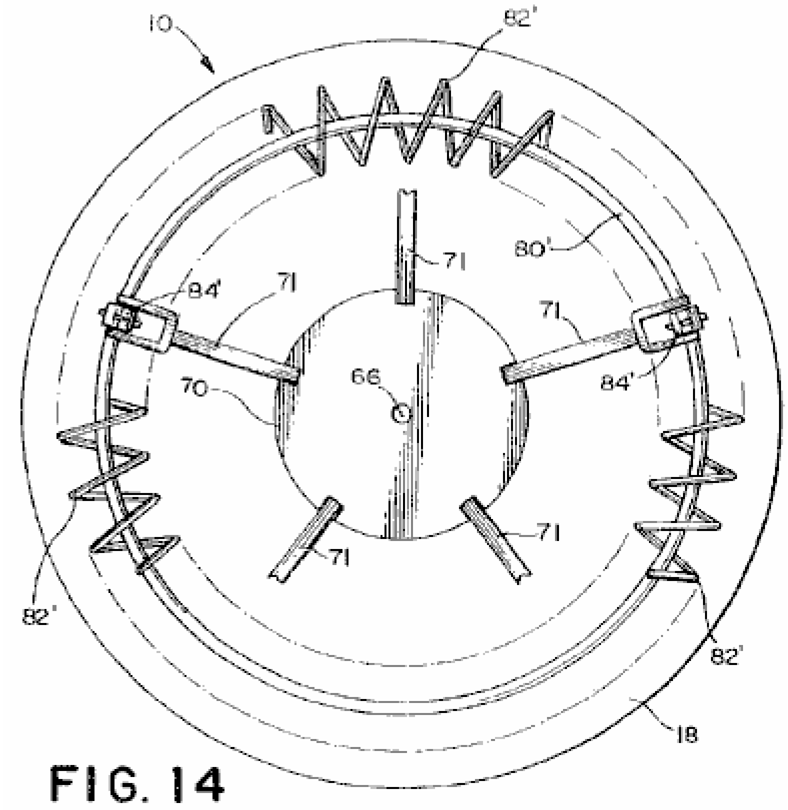

FIG. 14

The thirteenth preferred embodiment may also be constructed as a rotary motor **10** as shown in **Fig.14**. In this case, the axes of the rail **80'** and the helical stators **82** are configured to be circular. The circularly configured motor **10** includes an armature **70** centrally located within the perimeter of the rail **80'**. The armature **70** rotates about an armature axis of rotation **58** connected for rotation within a motor base **18** to which the rail **80'** is also attached by mounting posts **76** (not shown). The pitch of the first and the second helical stators **82**, **82'**, measured at a radius of the rail **80**, preferably equals the predetermined pitch of the helical groove **86**. The armature **70** is fixedly attached to the first bearing **88** (see **Fig.11B**) of each bearing assembly **84'** by an armature strut **71** thereby adding together the rotational motive power of each rotor assembly **14**. In order that the armature strut **71** does not interfere with the first and second helical stators **82**, **82'**, the first and second helical stators **82**, **82'** are made to have an opening toward the armature axis of rotation **58**.

Preferably, each first helical stator **82a, 82b, 82c** has mounted upon it a plurality of first stator magnets **11** with each stator magnet **11** having a direction of magnetisation aligned with a radial line of the rotor **12**. Preferably, the first helical stators **82** are uniformly spaced along the longitudinal axis **65** of the rail **80'** with each first helical stator **82** corresponding to one of the plurality of magnet pairs **32, 32', 32"**. Preferably, each rotor **12** is positioned on the rail **80'** so that one of the rotor magnet pairs **32, 32', 32"** is apposite to one of the corresponding first helical stators **82** as the rotor **12** rotates about the axis **65** of the rail **80** and slides along the rail **80'**. However, as those skilled in the art will appreciate, the rotor magnet pairs **32, 32', 32"** need not be directly apposite to each helical stator **82** as the rotors **12** rotate in order to generate a rotational force.

Alternatively, as will be appreciated by those skilled in the art, the motor **10** can be constructed without the second helical stator **82'**. In the simplest case the motor **10** could comprise only a single first helical stator **82** and a single rotor **12** comprising a single U-shaped magnet **20** generating the second magnetic field. The single rotor **12** is preferably positioned in the groove **86** on the rail **80'** so that the U-shaped rotor magnet **20** is continually apposite to the single first helical stator **82**. Consequently, a portion of the second magnetic field directly adjacent to a rear **26** of the U-shaped magnet **20** interacts with the first magnetic field generated by each first stator magnet **11"** mounted on the helical stator **82** to cause the rotor **12** to rotate about the axis **65** of the rail **80** and to slide along the rail **80'**. Preferably, when only a single first stator **82** set of first stators **82** is used, each first stator magnet **11"** has a direction of magnetisation oriented to be in the plane of the rotor **12** and generally perpendicular to a radial line of the rotor **12**. The north pole and the south pole of the first stator magnet **11"** are preferably spaced apart so that when one pole of the first stator magnet **11** is directly apposite to the rotor magnet **20**, the pole of opposite polarity is equally spaced from the U-shaped magnet **20** of the rotor **12**. As one skilled in the art would appreciate, a plurality of U-shaped rotor magnets **20** and corresponding first helical stators could be used. Further, as those skilled in the art will appreciate, other configurations of the rotor magnet **20** and the stator magnet **11** are possible, all of which rely on the novel attributes of the magnetic field adjacent to the rear **26** of a U-shaped rotor magnet **20**. For example, the previously described stator magnet **11"** perpendicular to the radial line of the rotor **12** could be two separate bar magnets, spaced apart, with the magnetisation of each of the two magnets aligned with a radial line of the rotor and having opposite directions of magnetisation.

FIG. 15A

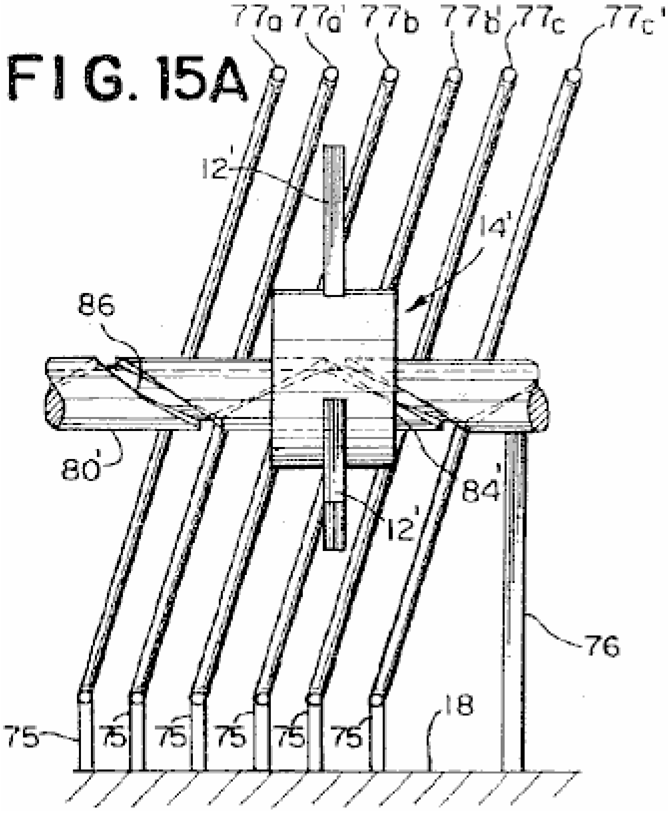

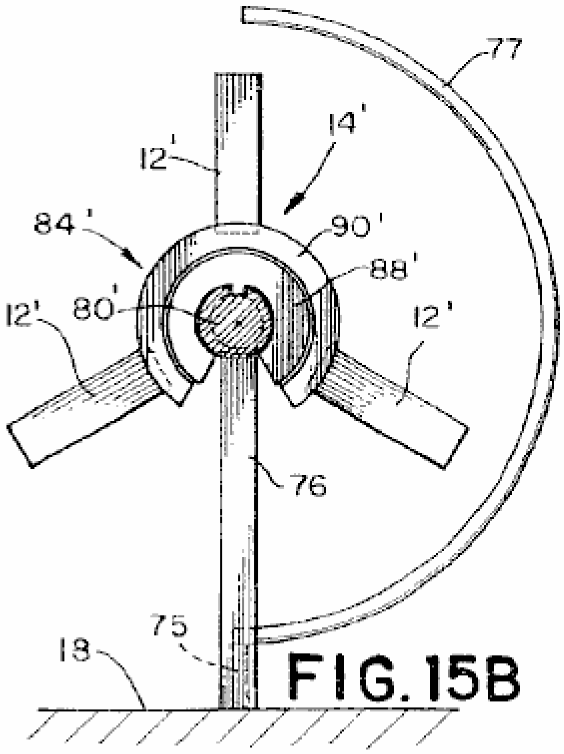

FIG. 15B

Referring now to **Fig.15A** and **Fig.15B** there is shown a fourteenth preferred embodiment of the motor **10**. The fourteenth embodiment is identical in structure to the thirteenth preferred embodiment except that the stator comprises a plurality of first ribs **77a, 77b, 77c** (**77**) and second ribs **77a', 77b', 77c'** (**77'**) in place of the first and the second helical stators **82, 82'** of the thirteenth embodiment. By substituting ribs **77, 77'** for the helical stators **82, 82'**, the attachment of the armature **70** to the rotors **12** is simplified. As those skilled in the art will appreciate, the length of the ribs **77, 77'** may vary from as little as 45 degrees to up to 265 degrees, with the motive power of the motor **10** being proportional to the length of the ribs.

Preferably, the first and the second ribs **77, 77'** have a pitch and a spacing that conforms to the pre-determined pitch of the rail **80'**. Further the orientation of the first and second stator magnets **11, 11'** and of the U-shaped rotor magnets **20** would be identical to the thirteenth embodiment. Accordingly, the operation of the fourteenth embodiment is identical to that of the thirteenth embodiment and is not repeated here for the sake of brevity.

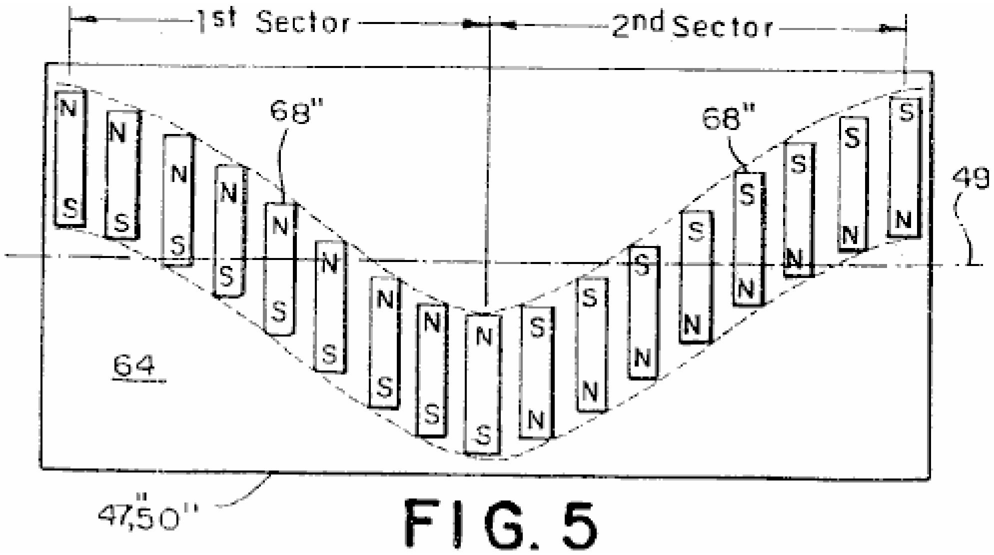

FIG. 5

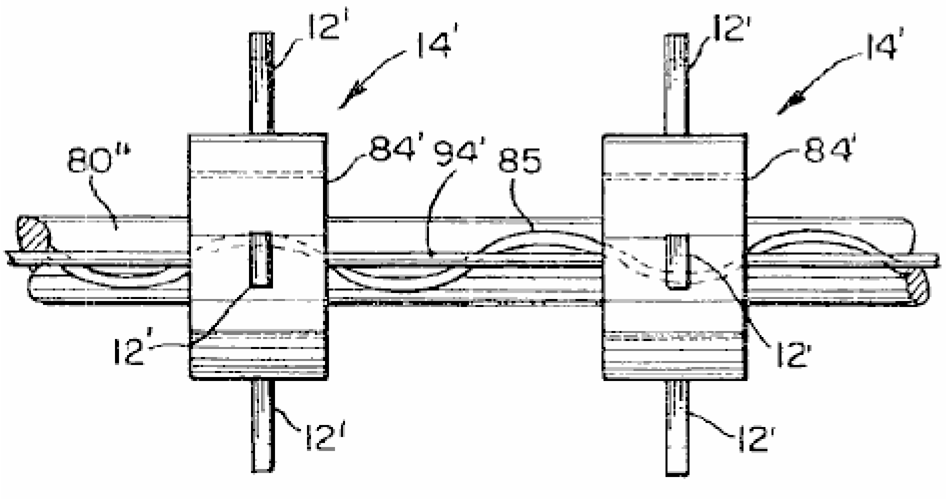

FIG. 16

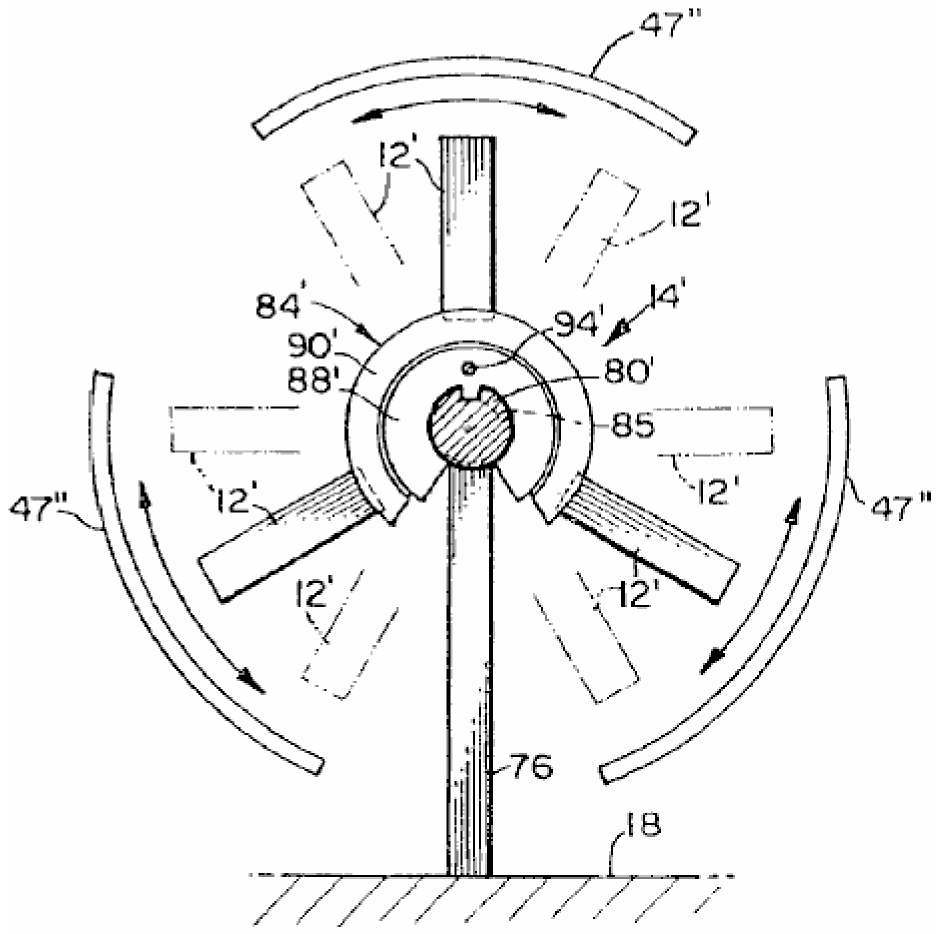

FIG. 17

Referring now to **Fig.5**, **Fig.16** and **Fig.17** there is shown a fifteenth preferred embodiment of the motor **10** comprising a rail **80"** having a longitudinal axis **65** and a generally sinusoidal groove **85** having a pre-determined period running around a periphery of the rail **80"**.

Preferably, the fifteenth preferred embodiment includes three generally identical stators **50"** arrayed in a circular fashion around the rail **80"**. Each stator **50"** has a surface **64** facing the rail **80"** and disposed generally equidistant from and parallel to the axis **65** of the rail **80"**. As shown in **Fig.5** and **Fig.17** each stator **50"** has a generally curved cross-section and a longitudinal line of demarcation **49** perpendicular to the cross-section and located about a midpoint of the surface **64**.

A plurality of stator magnets **68"** are attached to the surface **64** of the stator **50"** generating a first magnetic field. The stator magnets **68"** are displaced on the surface **64** in a sinusoidal pattern around the line of demarcation **49**. The sinusoidal pattern has a pre-determined period and a pre-determined maximum (peak) amplitude along the line of demarcation **49**. In the case where the rail **80"** and the longitudinal line of demarcation **49** of the stator **50"** are in a straight line, the period of the sinusoid is preferably equal to the period of the groove **85** on the rail **80**.

The sinusoidal pattern is also divided into a plurality of first and second alternating sectors with a boundary between the alternating sectors occurring at each maximum (peak) amplitude of the sinusoid. The direction of magnetisation of the stator magnets **68"** is opposite in the first and the second segments so that the direction of the first magnetic field in each first segment is opposite to the direction of the first magnetic field in each second segment. Preferably, the direction of magnetisation of the stator magnets **68"** is generally perpendicular to a radial line of the rotor **12**. Alternatively, the direction of magnetisation of the stator magnets **68"** could be generally aligned with a radial line of the rotor **12**. Further, as will be apparent to those skilled in the art, the first magnetic field need not be formed by a plurality of bar magnets but could be formed from a single magnet so that the first magnetic field would be sinusoidally displaced from the line of demarcation **49** and would alternate in opposite directions between the peaks of the sinusoid. Further, as will be appreciated by those skilled in the art, the displacement of the first magnetic field need not be precisely sinusoidal. For instance the displacement may be in a shape of a sawtooth or in a shape having a portion with constant plus and minus amplitude values, within the spirit and scope of the invention.

Preferably, the fifteenth preferred embodiment includes five rotors **12**, each rotor **12** having an axis **16** aligned with the axis of the rail **80''**. Each rotor **12** is connected to the rail **80''** by a bearing assembly **84'** so that the rotor **12** is free to rotate about the axis of the rail **65** and slide along the rail **80''**. Preferably, each rotor **12** includes three U-shaped magnet pairs **32, 32' 32''**, each pair comprising two U-shaped magnets **20**. Each U-shaped magnet **20** has a rear side and generates a second magnetic field. Each of the U-shaped magnet pairs **32, 32', 32''** is positioned on each rotor **12** so that the rear side **26** of each U-shaped magnet **20** is apposite to the first and the second segments of the sinusoidal pattern as the at least one rotor assembly **14** rotates about the rotor axis **16**, wherein an interaction of a portion of the second magnetic field directly adjacent to the rear **26** of each U-shaped magnet **20** with the first magnetic field of a corresponding stator **50''** causes the at least one rotor **12** to oscillate rotationally about the axis **65** of the rail **80''**. Those skilled in the art will appreciate that it is not necessary to have three pairs of U-shaped magnets **32, 32', 32''**. For instance, the number of U-shaped magnets **20** (or groups of abutted U-shaped magnets) spaced apart around the periphery of the rotor **12** may range from merely a single U-shaped magnet **20**, or may range in number up to a number of magnets limited only by the physical space around the periphery of the rotor **12.** Further the number of abutted U-shaped magnets **20** in a group of magnets **32** may also range from 1 up to a number of magnets limited only by the physical space around the periphery of the rotor **12**. Preferably, the number of stators **50''** equals the number of U-shaped magnet pairs **32, 32', 32''**. However, as will be appreciated by those skilled in the art, the number of stators **50''** is not limited to three but could be any number ranging upward from one, where the number of stators **50''** would preferably equal the number of U-shaped magnet pairs **32, 32', 32''**.

As shown in **Fig.16** the bearing assembly **84'** converts the oscillatory motion of the at least one rotor **12** about the rail to unidirectional linear motion along the rail **80'** by following the sinusoidal groove **85** in the rail **80'** with the boss **92** (shown in **Fig.11B**). A cross-link **94** connects the bearing assembly **84'** of adjacent rotors **12** together, thereby adding together the linear motion of each rotor assembly **14'** along the rail to provide the unidirectional linear motive power. The structure of the bearing assembly **84'** and the cross-link **94** is shown in **Fig.11B** and **Fig.12**, and the operation is identical to the linkage **84'** and the cross-link **94'** described for the twelfth embodiment. Accordingly, a detailed description of the linkage **84'** and the cross-link **94** is not repeated, for the sake of brevity.

In another aspect, the fifteenth preferred embodiment may also be configured in a circular arrangement similar to that of the fourteenth embodiment. In the fifteenth preferred embodiment, the helical stator **82'** shown in **Fig.14** is replaced with one or more curved stators **50''** spaced around the rotors **12**. In this case, the period of the sinusoidal pattern of the stator magnets is adjusted in accordance with the distance of the surface **64** of the respective stator **50''** from the armature axis of rotation **58** in order that the U-shaped magnets **20** on the rotors **12** remain apposite to the first and the second segments, as the rotors **12** slide along the rail **80''**. Accordingly, a description of those elements of circular arrangement of the fifteenth embodiment which are the same as for the linear embodiment are not repeated, for the sake of brevity.

Referring now to **Fig.4**, **Fig.18** and **Fig.19** there is shown a sixteenth preferred embodiment of the motor **10** for providing unidirectional motive power comprising a rail **80''** having a longitudinal axis **65** and a helical groove **86** having a pre-determined pitch, running around a periphery of the rail **80**.

Preferably, the sixteenth preferred embodiment further includes three generally identical stators **50'**, each stator **50'** having a surface **64** disposed generally equidistant from and parallel to the axis **65** of the rail **80**. Each stator **50'** has a longitudinal line of demarcation **49** located about a midpoint of the surface **64**. Preferably, a plurality of stator magnets **68'** are attached to the surface of the stator **50'** generating a first magnetic field. The plurality of stator magnets **68'** have a direction of magnetisation which rotates about a magnetic axis parallel to the line of demarcation **49**. In the case where the rail **80''** and the longitudinal line of demarcation **49** of the stator **50'** are in a straight line, the pitch of the rotation of the stator magnets **68'** is preferably equal to the pre-determined pitch of the helical groove **86** on the rail **80**.

The sixteenth embodiment further includes five rotors **12**, each rotor **12** having an axis of rotation **16** aligned with the axis **65** of the rail **80**. Each rotor **12** is connected to the rail **80** so that the rotor **12** is free to rotate about the axis **65** of the rail **80** and slide along the rail **80**. Each rotor **12** includes three pairs **32, 32', 32''** of U-shaped magnets **20** spaced around the periphery of the rotor **12**, each U-shaped magnet **20** generating a second magnetic field. The U-shaped magnets **20** are positioned on each rotor **12** so that a portion of the second magnetic field directly adjacent to the rear side **26** of the U-shaped magnet **20** interacts with the first magnetic field generated by the plurality of stator magnets **68'** to cause each rotor **12** to rotate about the rotor axis **16**. Those skilled in the art will appreciate that it is not necessary to have exactly three pairs of U-shaped magnets **32, 32', 32''**. For instance, the number of U-shaped magnets **20** (or groups of abutted U-shaped magnets) spaced apart around the periphery of the rotor **12** may range from merely a single U-shaped magnet **20**, or may range in number up to a number of U shaped magnets **20** limited only by the physical space around the periphery of the rotor **12**. Further the number of abutted U-shaped magnets **20** in a group of magnets **32** may also range from 1 up to a number of magnets limited only by the physical space around the periphery of the rotor **12**.

The sixteenth embodiment also includes a bearing assembly 84' connecting each rotor **12** to the helical groove **86**, the bearing assembly **84'** converting the rotary motion of each rotor **12** about the rail **80'** to unidirectional linear motion along the rail **80'**. A cross-link **94** connects the bearing assembly **84'** of adjacent rotors **12** together, thereby adding together the linear motion of each rotor assembly **14'** along the rail **80'** to provide the unidirectional linear motive power. The structure of the bearing assembly **84'** and the cross-link **94** is shown in **Fig.11B** and **Fig.12**, is identical to the bearing assembly **84'** and cross-link **94** described for the twelfth embodiment. Accordingly, a description of the linkage **84** and the cross-link **94** is not repeated, for the sake of brevity.

In another aspect of the sixteenth preferred embodiment the motor **10** may be configured in a circular arrangement similar to that of the fourteenth embodiment, as shown in **Fig.14**, except that the helical stator **82'** shown in **Fig.14** is replaced with one or more stators **50'** spaced around the rotors **12**. In this case, the pitch of the rotation of the plurality of stator magnets **68'** is adjusted in accordance with the distance of the surface **64** of the respective stator **50'** from the armature axis of rotation **58** in order that the U-shaped magnets **20** on the rotors **12** remain aligned with the plurality of stator magnets **68'** as the rotors **12** rotate about the axis **65** of the rail **80'** and slide along the rail **80'**. Accordingly, a description of those elements of the circular arrangement of the sixteenth embodiment which are the same as for the straight line configuration are not repeated, for the sake of brevity.

It will be appreciated by those skilled in the art that changes could be made to the embodiments described above without departing from the broad inventive concept thereof. It is understood, therefore, that this invention is not limited to the particular embodiments disclosed, but it is intended to cover modifications within the spirit and scope of the present invention as defined by the appended claims.

CLAIMS

1. An apparatus (10, 10') characterised by:

at least one rotor (12) having a periphery and a rotor axis (16), the at least one rotor (12) comprising a first rotor magnet (20) producing a first magnetic field, said first rotor magnet being U-shaped and having a north pole (23), a south pole (25) and a rear side (26), the rear side (26) of the first rotor magnet being adjacent to the periphery;

an axle (80) to which the at least one rotor (12) is connected at the rotor axis (16) for rotation of the at least one rotor (12) about the rotor axis (16); and

a stationary stator (48, 51) comprising a generally curved cross-section, said stator (51) having a surface (64) opposing the periphery of the at least one rotor (12), and a longitudinal line of demarcation (49) perpendicular to the cross-section at about a midpoint of the surface, the line of demarcation (49) delineating a first side (52) of the surface from a second side (54) of the surface (64), wherein a plurality of pairs of stator magnets (40, 42) producing a second magnetic field are attached to the surface (64), each pair of stator magnets (40, 42) comprising a first stator magnet (40) having a north pole and a south pole and a direction of magnetisation substantially parallel to the surface (64), and a second stator magnet (42) having a north pole and a south pole and a direction of magnetisation substantially parallel to the surface (64), the first stator magnet (40) being on the first side of the surface (64) with the north pole of the first stator magnet being closest to the line of demarcation (49), the second stator magnet (42) being on the second side (52) of the surface with the south pole of the second stator magnet (42) being closest to the line of demarcation (49), wherein the plurality of pairs of stator magnets (40, 42) are spaced along the line of demarcation (49) so that a first inter-magnet distance measured along the line of demarcation (49) between the north pole of the first stator magnet (40) and the south pole of the second stator (42) magnet of an adjacent pair of stator magnets (40, 42) is about equal to a second inter-magnet distance measured along the line of demarcation between the south pole of the first stator magnet (40) and the north pole of the second stator magnet (42), and wherein the interaction of the first and the second magnetic fields cause the at least one rotor (12) to translate in a predetermined direction along the line of demarcation.

2. The apparatus (10, 10') of claim 1, characterised by the north pole of each first stator magnet (40) and the south pole of each second stator magnet (42) being inclined toward the predetermined direction.

3. The apparatus (10, 10') of claim 1, further characterised by the rotor (12) including a second rotor magnet (22), said second rotor magnet (24) being U-shaped and having a north pole, a south pole and a rear side, the south pole of the second rotor magnet (22) abutting the north pole of the first rotor magnet (26) and the north pole of the second rotor magnet being adjacent to the periphery, and a third rotor magnet (24), said third rotor magnet (24) having a north pole, a south pole and a rear side, the north pole of the third rotor magnet (24) abutting the south pole of the first rotor magnet (26) and the south pole of the third rotor magnet (24) being adjacent to the periphery, said second magnet producing a third magnetic field and third magnet producing a fourth magnetic field.

4. The apparatus (10) of claim 1, characterised by the apparatus further including an armature (70) having an armature axis (58), the at least one rotor (12) being spaced from the armature (70) by an armature strut (71) and connected thereto by the axle (80) for rotation about the rotor axis (16), the at least one rotor (12) configured for rotation in a plane generally aligned with the armature axis (58), wherein the stator (51) is circular-cylindrical, with a stator axis (72) aligned with the armature axis (58).

5. The apparatus (10') of claim 1, further characterised by the stator (48) being linear, the stator (48) oriented so that the surface (64) of the stator (48) is generally parallel to the axle (80), each at least one rotor (12) being connected to the axle (80) by a bearing assembly (84) comprising a pair of first bearings (88) slidably attached to the axle (80), and a second bearing (90) connected to the pair of first bearings (88) for rotation about the first pair of bearings (88), said at least one rotor (12) being fixedly attached to the second bearing (90).

6. The apparatus (10') of claim 5, further characterised by a crosslink (94) which connects together the at least one rotors (12).

7. A apparatus (10, 10') characterised by:

at least one rotor (12) having a periphery, a rotor axis (16) and a thruster axis (34) perpendicular to the rotor axis (16) and intersecting the rotor axis (16), the at least one rotor (12) comprising spaced apart first and second rotor magnets (36, 38) having north and south poles aligned with the thruster axis (34), and a third rotor magnet (20, 20') located between the first and second rotor magnets (34, 38) on an axis generally perpendicular to the thruster axis (34), said first, second and third magnets producing a first magnetic field;

an axle (80) to which the at least one rotor (12) is connected at the rotor axis (16) for rotation of the at least one rotor (12) about the rotor axis (16); and

a stationary stator (48', 51') comprising a generally curved cross-section, said stator (48', 51') having a surface 64 opposing the periphery of the at least one rotor (12), and a longitudinal line of demarcation (49) perpendicular to the cross-section at about a midpoint of the surface (64), the line of demarcation (49) delineating a first side (52) of the surface from a second side (54) of the surface, wherein a plurality of sets of stator magnets (40', 42', 41) producing a second magnetic field are attached to the surface (64), each set of stator magnets (40', 42', 41) comprising a first stator magnet (40') having a north pole and a south pole and a direction of magnetisation substantially perpendicular to the surface (64), a second stator magnet (42') having a north pole and a south pole and a direction of magnetisation substantially perpendicular to the surface (64), and a third stator magnet (41), the third stator magnet (41) being attached to the stator (48', 51') along the line of demarcation (49) midway between the first stator magnet (40') and the second stator magnet (42'), the first stator magnet (40') being on the first side (52) of the surface with the south pole of the first stator magnet (40') being closest surface (64), the second stator magnet (42') being on the second side (54) of the surface (64) with the north pole of the second stator magnet (42') being closest to the surface (64), wherein the plurality of sets of stator magnets (40', 42', 41) are spaced along the line of demarcation (49) so that a first inter-magnet distance measured along the line of demarcation (49) between the north pole of the first stator magnet (40') and the south pole of the second stator magnet (42') of an adjacent pair of stator magnets (40', 42', 41) is about equal to a second inter-magnet distance measured along the line of demarcation (49) between the south pole of the first stator magnet (40') and the north pole of the second stator magnet (42'), wherein the interaction of the first and the second magnetic fields cause the at least one rotor (12) to translate in a predetermined direction along the line of demarcation.

8. The apparatus (10, 10') of claim 7, characterised by the third rotor magnet (20) being a U-shaped magnet and the third stator magnet (41) being a bar magnet.

9. The apparatus (10, 10') of claim 7, characterised by the third rotor magnet (20') being a bar magnet and the third stator magnet (41') being a U-shaped magnet.

10. The apparatus (10) of claim 7, characterised by the apparatus further including an armature (70) having an armature axis (58), the at least one rotor (12) being spaced from the armature (70) by an armature strut (71) and connected thereto by the axle (80) for rotation about the rotor axis (16), the at least one rotor (12) being configured for rotation in a plane generally aligned with the armature axis (58), wherein the stator (51') is circular, with a stator axis (72) aligned with the armature axis (58).

11. The apparatus (10') of claim 7, further characterised by the stator (48') being linear, the stator (48') oriented so that the surface (64) of the stator (48') is generally parallel to the axle (80), each at least one rotor (12) being connected to the axle (80) by a bearing assembly (84) comprising a pair of first bearings (88) slidably attached to the axle (80), and a second bearing (90) connected to the pair of first bearings (88) for rotation about the pair of first bearings (88), said at least one rotor (12) being fixedly attached to the second bearing (90).

12. The apparatus (10') of claim 11, further characterised by a crosslink (94) which connects together the at least one rotors (12).

13. An apparatus (10) for providing motion characterised by:

a stationary, generally circular, stator (50, 50', 50'') having a stator axis (58), an outer surface (64), and a circumferential line of demarcation (49) in a plane perpendicular to the stator axis (58) at about a midpoint of the outer surface (64);

at least one stator magnet (68, 68', 68'') attached to the outer surface (64) of the stator (50, 50', 50''), the at least one stator magnet (68, 68', 68'') being arranged in a generally circular arrangement about the stator axis (58);
an armature (70) attached to the stator (50, 50'', 50'') for rotation therewith, the armature (70) having an axis parallel to the stator axis (58);

at least one rotor (12) including at least one rotor magnet (20), the at least one rotor (12) being spaced from the armature (70) by an armature strut (71) and connected thereto by an axle (80) for rotation about a rotor axis (16), the at least one rotor (12) being configured for rotation in a plane generally aligned with the stator axis (58); and

a driving linkage assembly (53, 55, 62) connecting the at least one rotor to the stator, the linkage assembly (53, 55, 62) configured to cause the armature (70) to rotate about the stator axis (58) when the at least one rotor (12) rotates about the rotor axis (16).

14. The apparatus according to claim 13 wherein a direction of magnetisation of the at least one stator magnet (68) is generally perpendicular to a radial line of the at least one rotor (12).

15. The apparatus according to claim 13 wherein a direction of magnetisation of the at least one stator magnet (68) is generally aligned with a radial line of the at least one rotor (12).

16. The apparatus according to claim 13 wherein the at least one rotor magnet (20) comprises a U-shaped magnet.

17. The apparatus according to claim 13 wherein the at least one rotor magnet (20) comprises a bar magnet and the at least one stator magnet (68) is a U-shaped magnet.

18. The apparatus according to claim 13, the at least one stator magnet (68') having a direction of magnetisation which rotates about the circumferential line of demarcation (49) with a predetermined periodicity.

19. The apparatus according to claim 13, the at least one stator magnet (68'') having a direction of magnetisation in a plane of the stator (50'') and which is displaced in a sinusoidal pattern from the line of demarcation (49), the sinusoidal pattern having a pre-determined period and a pre-determined maximum amplitude and divided into a plurality of alternating first and second sectors with a boundary between the alternating first and second sectors occurring at peak amplitudes of the sinusoid, the direction of magnetisation of the at least one magnet (68'') being opposite in direction in the first and the second segments.

HOWARD JOHNSON: PERMANENT MAGNET MOTOR

Patent US 4,151,431 **24th April 1979** **Inventor: Howard R. Johnson**

PERMANENT MAGNET MOTOR

This is a re-worded extract from this Patent. It describes a motor powered solely by permanent magnets and which it is claimed can power an electrical generator.

ABSTRACT

The invention is directed to the method of utilising the unpaired electron spins in ferromagnetic and other materials as a source of magnetic fields for producing power without any electron flow as occurs in normal conductors, and to permanent magnet motors for utilising this method to produce a power source. In the practice of the invention the unpaired electron spins occurring within permanent magnets are utilised to produce a motive power source solely through the superconducting characteristics of a permanent magnet, and the magnetic flux created by the magnets is controlled and concentrated to orientate the magnetic forces generated in such a manner to produce useful continuous work, such as the displacement of a rotor with respect to a stator. The timing and orientation of magnetic forces at the rotor and stator components produced by the permanent magnets is accomplished by the proper geometrical relationship of these components.

BACKGROUND OF THE INVENTION:

Conventional electric motors employ magnetic forces to produce either rotational or linear motion. Electric motors operate on the principal that when a conductor which carries a current is located in a magnetic field, a magnetic force is exerted upon it. Normally, in a conventional electric motor, the rotor, or stator, or both, are so wired that magnetic fields created by electromagnets use attraction, repulsion, or both types of magnetic forces, to impose a force upon the armature causing rotation, or linear displacement of the armature. Conventional electric motors may employ permanent magnets either in the armature or stator components, but to date they require the creation of an electromagnetic field to act upon the permanent magnets. Also, switching gear is needed to control the energising of the electromagnets and the orientation of the magnetic fields producing the motive power.

It is my belief that the full potential of magnetic forces existing in permanent magnets has not been recognised or utilised because of incomplete information and theory with respect to atomic motion occurring within a permanent magnet. It is my belief that a presently unnamed atomic particle is associated with the electron movement of a superconducting electromagnet and the loss-less flow of currents in permanent magnets. The unpaired electron flow is similar in both situations. This small particle is believed to be opposite in charge to an electron and to be located at right angles to the moving electron. This particle must be very small to penetrate all known elements in their various states as well as their known compounds (unless they have unpaired electrons which capture these particles as they endeavour to pass through).

The electrons in ferrous materials differ from those found in most elements in that they are unpaired, and being unpaired they spin around the nucleus in such a way that they respond to magnetic fields as well as creating a magnetic field themselves. If they were paired, their magnetic fields would cancel out. However, being unpaired they create a measurable magnetic field if their spins are orientated in one direction. The spins are at right angles to their magnetic fields.

In niobium superconductors, at a critical state, the magnetic lines of force cease to be at right angles. This change must be due to establishing the required conditions for unpaired electronic spins instead of electron flow in the conductor, and the fact that very powerful electromagnets can be formed with superconductors illustrates the tremendous advantage of producing the magnetic field by unpaired electron spins rather than conventional electron flow. In a superconducting metal, wherein the electrical resistance becomes greater in the metal than the proton resistance, the flow turns to electron spins and the positive particles flow parallel in the metal in the manner occurring in a permanent magnet where a powerful flow of magnetic positive particles or magnetic flux causes the unpaired electrons to spin at right angles. Under cryogenic superconduction conditions the freezing of the crystals in place makes it possible for the spins to continue, and in a permanent magnet the grain orientation of the magnetised material allows these spins, permitting them to continue and causing the flux to flow parallel to the metal. In a superconductor, at first the electron is flowing and the positive particle is spinning; later, when critical, the reverse occurs, i.e., the electron is spinning and the positive particle is flowing at right angles. These positive particles will thread or work their way through the electron spins present in the metal.

In a sense, a permanent magnet may be considered a room-temperature superconductor. It is a superconductor because the electron flow does not cease, and this electron flow can be made to do work through the magnetic field which it creates. Previously, this source of power has not been used because it was not possible to modify the electron flow to accomplish the switching functions of the magnetic field. Such switching functions are common in a conventional electric motor where electrical current is employed to align the much greater electron current in the iron pole pieces and concentrate the magnetic field at the proper places to give the thrust necessary to move the motor armature. In a conventional electric motor, switching is accomplished by the use of brushes, commutators, alternating current, or other means.

In order to accomplish the switching function in a permanent magnet motor, it is necessary to shield the magnetic leakage so that it will not appear as too great a loss factor at the wrong places. The best method to accomplish this is to concentrate the magnetic flux in the place where it will be the most effective. Timing and switching can be achieved in a permanent magnet motor by concentrating the flux and using the proper geometry of the motor rotor and stator to make most effective use of the magnetic fields. By the proper combination of materials, geometry and magnetic concentration, it is possible to achieve a mechanical advantage of high ratio, greater than 100 to 1, capable of producing continuous motive force.

To my knowledge, previous work done with permanent magnets, and motive devices utilising permanent magnets, have not achieved the result desired in the practice of the inventive concept, and it is with the proper combination of materials, geometry and magnetic concentration that the presence of the magnetic spins within a permanent magnet may be utilised as a motive force.

SUMMARY OF THE INVENTION:

It is an object of the invention to utilise the magnetic spinning phenomenon of unpaired electrons occurring in ferromagnetic material to produce the movement of a mass in a unidirectional manner so as to permit a motor to be driven solely by the magnetic forces occurring within permanent magnets. Both linear and rotational types of motor may be produced. It is an object of the invention to provide the proper combination of materials, geometry and magnetic concentration to power a motor. Whether the motor is a linear type or a rotary type, in each instance the "stator" may consist of several permanent magnets fixed relative to each other, to create a track. This track is linear for a linear motor and circular for a rotary motor. An armature magnet is carefully positioned above this track so that an air gap exists between it and the track. The length of the armature magnet is defined by poles of opposite polarity, and the longer axis of the armature magnet is pointed in the direction of its movement.

The stator magnets are mounted so that all the same poles face the armature magnet. The armature magnet has poles which are both attracted to and repelled by the adjacent pole of the stator magnets, so both attractive and repulsive forces act upon the armature magnet to make it move.

The continuing motive force which acts on the armature magnet is caused by the relationship of the length of the armature magnet to the width and spacing of the stator magnets. This ratio of magnet and magnet spacings, and with an acceptable air gap spacing between the stator and armature magnets, produces a continuous force which causes the movement of the armature magnet.

In the practice of the invention, movement of the armature magnet relative to the stator magnets results from a combination of attractive and repulsive forces between the stator and armature magnets. By concentrating the magnetic fields of the stator and armature magnets the motive force imposed upon the armature magnet is intensified, and in the disclosed embodiments, the means for achieving this magnetic field concentration are shown.

This method comprises of a plate of high magnetic field permeability placed behind one side of the stator magnets and solidly engaged with them. The magnetic field of the armature magnet may be concentrated and directionally oriented by bowing the armature magnet, and the magnetic field may further be concentrated by shaping the pole ends of the armature magnet to concentrate the magnet field at a relatively limited surface at the armature magnet pole ends.

Preferably, several armature magnets are used and these are staggered relative to each other in the direction their movement. Such an offsetting or staggering of the armature magnets distributes the impulses of force imposed upon the armature magnets and results in a smoother application of forces to the armature magnet producing a smoother and more uniform movement of the armature component.

In the rotary embodiment of the permanent magnet motor of the invention the stator magnets are arranged in a circle, and the armature magnets rotate about the stator magnets. A mechanism is shown which can move the armature relative to the stator and this controls the magnitude of the magnetic forces, altering the speed of rotation of the motor.

BRIEF DESCRIPTION OF THE DRAWINGS

The objects and advantages of the invention mentioned earlier, will be appreciated from the following description and accompanying drawings:

Fig. 1 is a schematic view of electron flow in a superconductor indicating the unpaired electron spins,
Fig. 2 is a cross-sectional view of a superconductor under a critical state illustrating the electron spins,
Fig. 3 is a view of a permanent magnet illustrating the flux movement through it,
Fig. 4 is a cross-sectional view illustrating the diameter of the magnet of Fig.3,
Fig. 5 is an elevational representation of a linear motor embodiment of the permanent magnet motor of the invention illustrating one position of the armature magnet relative to the stator magnets, and indicating the magnetic forces imposed upon the armature magnet,
Fig. 6 is a view similar to Fig.5 illustrating displacement of the armature magnet relative to the stator magnets, and the influence of magnetic forces thereon at this location,
Fig. 7 is a further elevational view similar to Fig.5 and Fig.6 illustrating further displacement of the armature magnet to the left, and the influence of the magnetic forces thereon,
Fig. 8 is a top plan view of a linear embodiment of the inventive concept illustrating a pair of armature magnets in linked relationship disposed above the stator magnets,
Fig. 9 is a diametrical, elevational, sectional view of a rotary motor embodiment in accord with the invention as taken along section IX-IX of Fig.10, and
Fig. 10 is an elevational view of the rotary motor embodiment as taken along X-X of Fig.9.

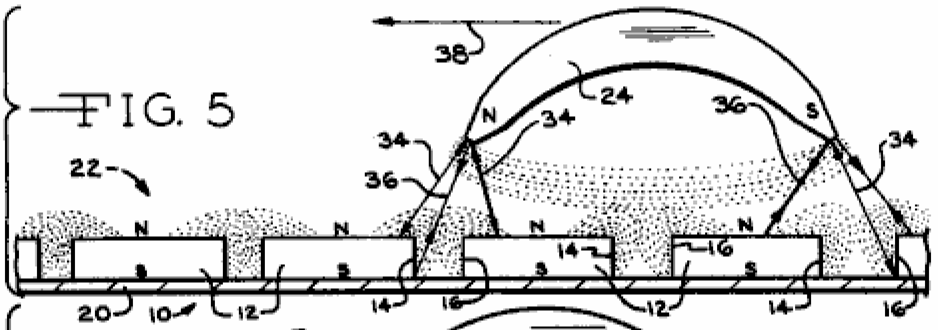
FIG. 5

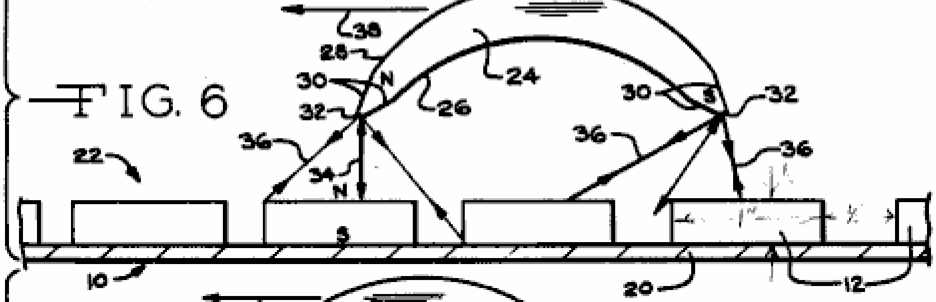
FIG. 6

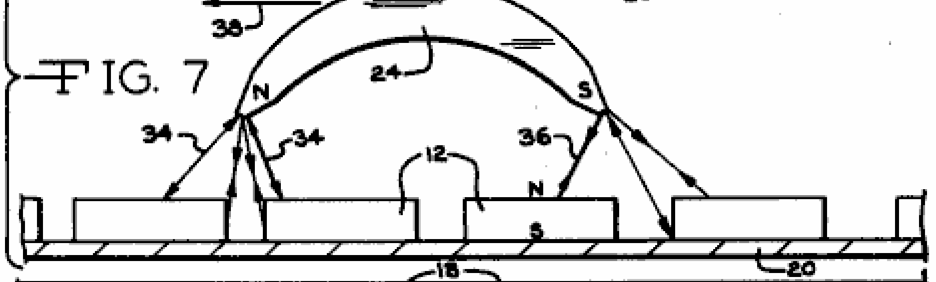
FIG. 7

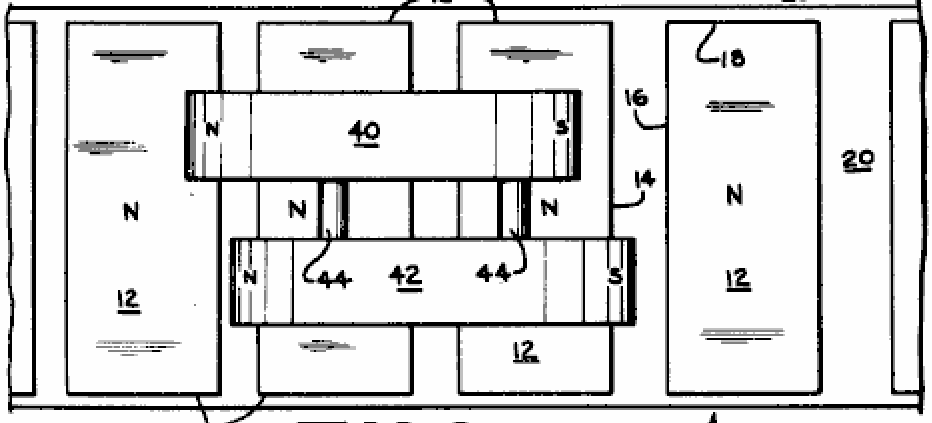
FIG. 8

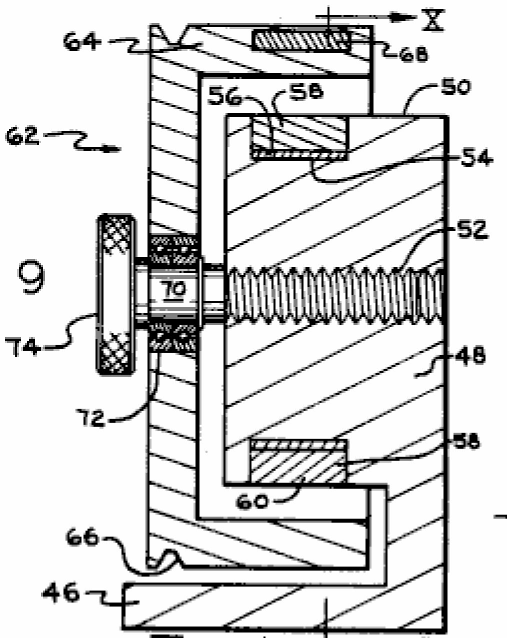

—FIG. 9

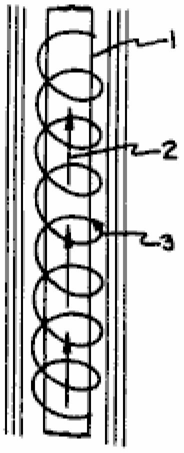

—FIG. 1

—FIG. 2

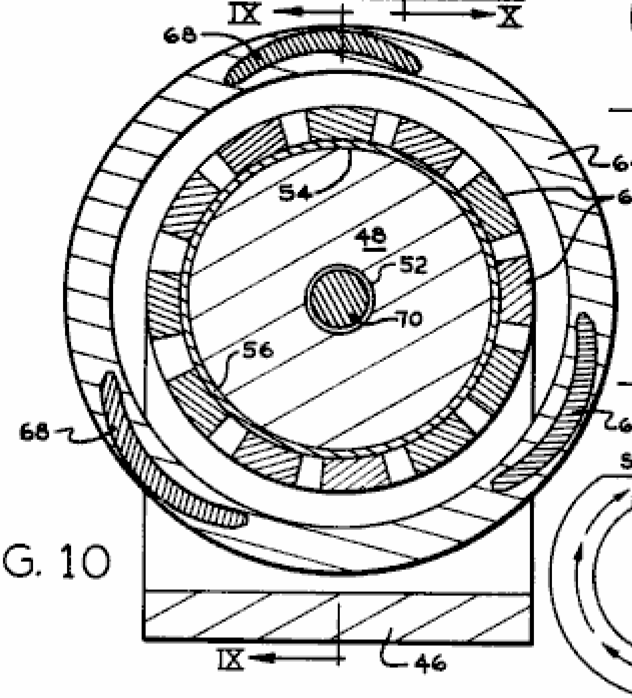

—FIG. 10

—FIG. 4

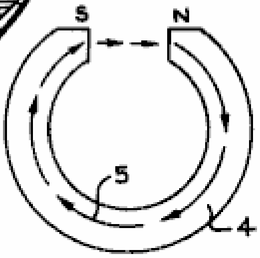

—FIG. 3

DESCRIPTION OF THE PREFERRED EMBODIMENTS

In order to better understand the theory of the inventive concept, reference is made to **Figs. 1 through 4**. In **Fig.1** a superconductor 1 is illustrated having a positive particle flow as represented by arrow **2**, the unpaired electrons of the ferrous conductor **1** spin at right angles to the proton flow in the conductor as represented by the spiral line and arrow **3**. In accord with the theory of the invention the spinning of the ferrous unpaired electrons results from the atomic structure of ferrous materials and this spinning atomic particle is believed to be opposite in charge and located at right angles to the moving electrons. It is assumed to be very small in size capable of penetrating other elements and their compounds unless they have unpaired electrons which capture these particles as they endeavour to pass through.

The lack of electrical resistance of conductors at a critical superconductor state has long been recognised, and superconductors have been utilised to produce very high magnetic flux density electromagnets. **Fig.2** represents a cross section of a critical superconductor and the electron spins are indicated by the arrows **3**. A permanent magnet may be considered a superconductor as the electron flow therein does not cease, and is without resistance, and unpaired electric spinning particles exist which, in the practice of the invention, are utilised to produce motor force. **Fig.3** illustrates a horseshoe shaped permanent magnet at **4** and the magnetic flux through it is indicated by arrows **5**, the magnetic flow being from the south pole to the north pole and through the magnetic material. The accumulated electron spins occurring about the diameter of the magnet **5** are represented at **6** in

Fig.4, and the spinning electron particles spin at right angles in the iron as the flux travels through the magnet material.

By utilising the electron spinning theory of ferrous material electrons, it is possible with the proper ferromagnetic materials, geometry and magnetic concentration to utilise the spinning electrons to produce a motive force in a continuous direction, thereby resulting in a motor capable of doing work.

It is appreciated that the embodiments of motors utilising the concepts of the invention may take many forms, and in the illustrated forms the basic relationships of components are illustrated in order to disclose the inventive concepts and principles. The relationships of the plurality of magnets defining the stator 10 are best appreciated from **Figs. 5 through 8**. The stator magnets **12** are preferably of a rectangular configuration, **Fig.8**, and so magnetised that the poles exist at the large surfaces of the magnets, as will be appreciated from the N (North) and S (South) designations. The stator magnets include side edges **14** and **16** and end edges **18**. The stator magnets are mounted upon a supporting plate **20**, which is preferably of a metal having a high permeability to magnetic fields and magnetic flux such as that available under the trademark Netic CoNetic sold by Perfection Mica Company of Chicago, Illinois. Thus, the plate **20** will be disposed toward the south pole of the stator magnets **12**, and preferably in direct engagement therewith, although a bonding material may be interposed between the magnets and the plate in order to accurately locate and fix the magnets on the plate, and position the stator magnets with respect to each other.

Preferably, the spacing between the stator magnets **12** slightly differs between adjacent stator magnets as such a variation in spacing varies the forces being imposed upon the armature magnet at its ends, at any given time, and thus results in a smoother movement of the armature magnet relative to the stator magnets. Thus, the stator magnets so positioned relative to each other define a track **22** having a longitudinal direction left to right as viewed in **Figs. 5 through 8**.

In **Figs. 5 through 7** only a single armature magnet **24** is disclosed, while in **Fig.8** a pair of armature magnets are shown. For purposes of understanding the concepts of the invention the description herein will be limited to the use of single armature magnet as shown in **Figs. 5 through 7**.

The armature magnet is of an elongated configuration wherein the length extends from left to right, **Fig.5**, and may be of a rectangular transverse cross-sectional shape. For magnetic field concentrating and orientation purposes the magnet **24** is formed in an arcuate bowed configuration as defined by concave surfaces **26** and convex surfaces **28**, and the poles are defined at the ends of the magnet as will be appreciated from **Fig.5**. For further magnetic field concentrating purposes the ends of the armature magnet are shaped by bevelled surfaces **30** to minimise the cross sectional area at the magnet ends **32**, and the magnetic flux existing between the poles of the armature magnet are as indicated by the light dotted lines. In like manner the magnetic fields of **6** the stator magnets **12** are indicated by the light dotted lines.

The armature magnet **24** is maintained in a spaced relationship above the stator track **22**. This spacing may be accomplished by mounting the armature magnet upon a slide, guide or track located above the stator magnets, or the armature magnet could be mounted upon a wheeled vehicle carriage or slide supported upon a non-magnetic surface or guideway disposed between the stator magnets and the armature magnet. To clarify the illustration, the means for supporting the armature magnet **24** is not illustrated and such means form no part of invention, and it is to be understood that the means supporting the armature magnet prevents the armature magnet from moving away from the stator magnets, or moving closer thereto, but permits free movement of the armature magnet to the left or right in a direction parallel to the track **22** defined by the stator magnets.

It will be noted that the length of the armature magnet **24** is slightly greater than the width of two of the stator magnets **12** and the spacing between them. The magnetic forces acting upon the armature magnet when in the position of **Fig.5** will be repulsion forces **34** due to the proximity of like polarity forces and attraction forces at **36** because of the opposite polarity of the south pole of the armature magnet, and the north pole field of the sector magnets. The relative strength of this force is represented by the thickness of the force line.

The resultant of the force vectors imposed upon the armature magnet as shown in **Fig.5** produce a primary force vector **38** toward the left, **Fig.5**, displacing the armature magnet **24** toward the left. In **Fig.6** the magnetic forces acting upon the armature magnet are represented by the same reference numerals as in **Fig.5**. While the forces **34** constitute repulsion forces tending to move the north pole of the armature magnet away from the stator magnets, the attraction forces imposed upon the south pole of the armature magnet and some of the repulsion forces, tend to move the armature magnet further to the left, and as the resultant force **38** continues to be toward the left the armature magnet continues to be forced to the left. **Fig.7** represents further displacement of the armature magnet **24** to the left with respect to the position of **Fig.6**, and the magnetic forces acting thereon are represented by the same reference numerals as in **Fig.5** and **Fig.6**, and the stator magnet will continue to move to the left, and such movement continues the length of the track **22** defined by the stator magnets **12**.

Upon the armature magnet being reversed such that the north pole is positioned at the right as viewed in **Fig.5**, and the south pole is positioned at the left, the direction of movement of the armature magnet relative to the stator magnets is toward the right, and the theory of movement is identical to that described above.

In **Fig.8** a plurality of armature magnets **40** and **42** are illustrated which are connected by links **44**. The armature magnets are of a shape and configuration identical to that of the embodiment of **Fig.5**, but the magnets are staggered with respect to each other in the direction of magnet movement, i.e., the direction of the track **22** defined by the stator magnets **12**. By so staggering a plurality of armature magnets a smoother movement of the interconnected armature magnets is produced as compared when using a single armature magnet as there is variation in the forces acting upon each armature magnet as it moves above the track **22** due to the change in magnetic forces imposed thereon. The use of several armature magnets tends to "smooth out" the application of forces imposed upon linked armature magnets, resulting in a smoother movement of the armature magnet assembly. Of course, any number of armature magnets may be interconnected, limited only by the width of the stator magnet track **22**.

In **Fig.9** and **Fig.10** a rotary embodiment embracing the inventive concepts is illustrated. In this embodiment the principle of operation is identical to that described above, but the orientation of the stator and armature magnets is such that rotation of the armature magnets is produced about an axis, rather than a linear movement being achieved.

In **Fig.9** and **Fig.10** a base is represented at **46** serving as a support for a stator member **48**. The stator member **48** is made of a non-magnetic material, such as synthetic plastic, aluminium, or the like. The stator includes a cylindrical surface **50** having an axis, and a threaded bore **52** is concentrically defined in the stator. The stator includes an annular groove **54** receiving an annular sleeve **56** of high magnetic field permeability material such as Netic Co-Netic and a plurality of stator magnets **58** are affixed upon the sleeve **56** in spaced circumferential relationship as will be apparent in **Fig.10**. Preferably, the stator magnets **58** are formed with converging radial sides as to be of a wedge configuration having a curved inner surface engaging sleeve **56**, and a convex pole surface **60**.

The armature **62**, in the illustrated embodiment, is of a dished configuration having a radial web portion, and an axially extending portion **64**. The armature **62** is formed of a non-magnetic material, and an annular belt receiving groove **66** is defined therein for receiving a belt for transmitting power from the armature to a generator, or other power consuming device. Three armature magnets **68** are mounted on the armature portion **64**, and such magnets are of a configuration similar to the armature magnet configuration of **Figs. 5 through 7**.

The magnets **68** are staggered with respect to each other in a circumferential direction wherein the magnets are not placed exactly 120 degrees apart but instead, a slight angular staggering of the armature magnets is desirable to "smooth out" the magnetic forces being imposed upon the armature as a result of the magnetic forces being simultaneously imposed upon each of the armature magnets. The staggering of the armature magnets **68** in a circumferential direction produces the same effect as the staggering of the armature magnets **40** and **42** as shown in **Fig.8**.

The armature **62** is mounted upon a threaded shaft **70** by anti-friction bearings **72**, and the shaft **70** is threaded into the stator threaded bore **52**, and may be rotated by the knob **74**. In this manner rotation of the knob **74**, and shaft **70**, axially displaces the armature **62** with respect to the stator magnets **58**, and such axial displacement will very the magnitude of the magnetic forces imposed upon the armature magnets **68** by the stator magnets thereby controlling the speed of rotation of the armature. As will be noted from **Figs. 4 to 7, 9 and 10**, an air gap exists between the armature magnets and the stator magnets and the dimension of this spacing, effects the magnitude of the forces imposed upon the armature magnet or magnets. If the distance between the armature magnets and the stator magnets is reduced the forces imposed upon the armature magnets by the stator magnets are increased, and the resultant force **8** vector tending to displace the armature magnets in their path of movement increases. However, the decreasing of the spacing between the armature and stator magnets creates a "pulsation" in the movement of the armature magnets which is objectionable, but can be, to some extent, minimised by using a plurality of armature magnets. Increasing the distance between the armature and stator magnets reduces the pulsation tendency of the armature magnet, but also reduces the magnitude of the magnetic forces imposed upon the armature magnets. Thus, the most effective spacing between the armature and stator magnets is that spacing which produces the maximum force vector in the direction of armature magnet movement, with a minimum creation of objectionable pulsation.

In the disclosed embodiments the high permeability plate **20** and sleeve **56** are disclosed for concentrating the magnetic field of the stator magnets, and the armature magnets are bowed and have shaped ends for magnetic field concentration purposes. While such magnetic field concentration means result in higher forces imposed upon the armature magnets for given magnet intensities, it is not intended that the inventive concepts be limited to the use of such magnetic field concentrating means.

As will be appreciated from the above description of the invention, the movement of the armature magnet or magnets results from the described relationship of components. The length of the armature magnets as related to the width of the stator magnets and spacing between them, the dimension of the air gap and the configuration of the magnetic field, combined, produce the desired result and motion. The inventive concepts may be practised even though these relationships may be varied within limits not yet defined and the invention is intended to encompass all dimensional relationships which achieve the desired goal of armature movement. By way of example, with respect to **Figs. to 7**, the following dimensions were used in an operating prototype:

The length of armature magnet **24** is 3.125", the stator magnets **12** are 1" wide, .25" thick and 4" long and grain oriented. The air gap between the poles of the armature magnet and the stator magnets is approximately 1.5" and the spacing between the stator magnets is approximately .5" inch.

In effect, the stator magnets define a magnetic field track of a single polarity transversely interrupted at spaced locations by the magnetic fields produced by the lines of force existing between the poles of the stator magnets and the unidirectional force exerted on the armature magnet is a result of the repulsion and attraction forces existing as the armature magnet traverses this magnetic field track.

It is to be understood that the inventive concept embraces an arrangement wherein the armature magnet component is stationary and the stator assembly is supported for movement and constitutes the moving component, and other variations of the inventive concept will be apparent to those skilled in the art without departing from the scope thereof. As used herein the term "track" is intended to include both linear and circular arrangements of the static magnets, and the "direction" or "length" of the track is that direction parallel or concentric to the intended direction of armature magnet movement.

CLAIMS

1. A permanent magnet motor comprising, in combination, a stator track defining a track direction and having first and second sides and composed of a plurality of track permanent magnets each having first and second poles of opposite polarity, said magnets being disposed in side-by-side relationship having a spacing between adjacent magnets and like poles defining said track sides, an elongated armature permanent magnet located on one of said track sides for relative movement thereto and in spaced relationship to said track side wherein an air gap exists between said armature magnet and said track magnets, said armature magnet having first and second poles of opposite polarity located at the opposite ends of said armature magnet deeming the length thereof, the length of said armature magnet being disposed in a direction in general alignment with the direction of said track, the spacing of said armature magnet poles from said track associated side and the length of said armature magnet as related to the width and spacing of said track magnets in the direction of said track being such as to impose a continuous force on said armature magnet in said general direction of said track.

2. In a permanent magnet motor as in claim 1 wherein the spacing between said poles of said armature and the adjacent stator track side are substantially equal.

3. In a permanent magnet motor as in claim 1 wherein the spacing between adjacent track magnets varies.

4. In a permanent magnet motor as in claim 1 wherein a plurality of armature magnets are disposed on a common side of said stator track, said armature magnets being mechanically interconnected.

5. In a permanent magnet motor as in claim 4 wherein said armature magnets are staggered with respect to each other in the direction of said track.

6. In a permanent magnet motor as in claim 1 wherein magnetic field concentrating means are associated with said track magnets.

7. In a permanent magnet motor as in claim 6 wherein said field concentrating means comprises a sheet of magnetic material of high field permeability engaging side and pole of said track opposite to that side and pole disposed toward said armature magnet.

8. In a permanent magnet as in claim 1 wherein said armature magnet is of an arcuate configuration in its longitudinal direction bowed toward said track, said armature magnet having ends shaped to concentrate the magnetic field at said ends.

9. In a permanent magnet motor as in claim 1 wherein said stator track is of a generally linear configuration, and means supporting said armature magnet relative to said track for generally linear movement of said armature magnet.

10. In a permanent magnet motor as in claim 1 wherein said stator track magnets define a circle having an axis, an armature rotatably mounted with respect to said track and concentric and coaxial thereto, said armature magnet being mounted upon said armature.

11. In a permanent magnet motor as in claim 10, means axially adjusting said armature relative to said track whereby the axial relationship of said armature magnet and said stator magnets may be varied to adjust the rate of rotation of said armature.

12. In a permanent magnet motor as in claim 10 wherein a plurality of armature magnets are mounted on said armature.

13. In a permanent magnet motor as in claim 12 wherein said armature magnets are circumferentially non-uniformly spaced on said armature.

14. A permanent magnet motor comprising, in combination, a stator comprising a plurality of circumferentially spaced stator permanent magnets having poles of opposite polarity, said magnets being arranged to substantially define a circle having an axis, the poles of said magnets facing in a radial direction with respect to said axis and poles of the same polarity facing away from said axis and the poles of opposite polarity facing toward said axis, an armature mounted for rotation about said axis and disposed adjacent said stator, at least one armature permanent magnet having poles of opposite polarity mounted on said armature and in radial spaced relationship to said circle of stator magnets, said armature magnet poles extending in the circumferential direction of armature rotation, the spacing of said armature magnet poles from said stator magnets and the circumferential length of said armature magnet and the spacing of said stator magnets being such as to impose a continuing circumferential force on said armature magnet to rotate said armature.

15. In a permanent magnet motor as in claim 14 wherein a plurality of armature magnets are mounted upon said armature.

16. In a permanent magnet motor as in claim 14 wherein said armature magnets are asymmetrically circumferentially spaced on said armature.

17. In a permanent magnet motor as in claim 14 wherein the poles of said armature magnet are shaped to concentrate the magnetic field thereof.

18. In a permanent magnet motor as in claim 14, magnetic field concentrating means associated with said stator magnets concentrating the magnetic fields thereof at the spacings between adjacent stator magnets.

19. In a permanent magnet motor as in claim 18 wherein said magnet field concentrating means comprises an annular ring of high magnetic field permeability material concentric with said axis and in substantial engagement with poles of like polarity of said stator magnets.

20. In a permanent magnet motor as in claim 14 wherein said armature magnet is of an arcuate bowed configuration in the direction of said poles thereof defining a concave side and a convex side, said concave side being disposed toward said axis, and said poles of said armature magnet being shaped to concentrate the magnetic field between said poles thereof.

21. In a permanent magnet motor as in claim 14, means for axially displacing said stator and armature relative to each other to adjust the axial alignment of said stator and armature magnets.

22. The method of producing a unidirectional motive force by permanent magnets using a plurality of spaced stator permanent magnets having opposite polarity poles defining a track having a predetermined direction, and an armature magnet having a length defined by poles of opposite polarity movably mounted for movement relative to the track in the direction thereof, and of a predetermined length determined by the width and dimensions of said stator magnets comprising forming a magnetic field track by said stator magnets having a magnetic field of common polarity interrupted at spaced locations in a direction transverse to the direction of said magnetic field track by magnetic fields created by magnetic lines of force existing between the poles of the stator magnets and positioning the armature magnet in spaced relation to said magnetic field track longitudinally related to the direction of the magnetic field track such a distance that the repulsion and attraction forces imposed on the armature magnet by said magnetic field track imposes a continuing unidirectional force on the armature magnet in the direction of the magnetic field track.

23. The method of producing a unidirectional motive force as in claim 22 including concentrating the magnetic fields created by magnetic lines of force between the poles of the stator magnets.

24. The method of producing a unidirectional motive force as in claim 22 including concentrating the magnetic field existing between the poles of the armature magnet.

25. The method of producing a unidirectional motive force as in claim 22 including concentrating the magnetic fields created by magnetic lines of force between the poles of the stator magnets and concentrating the magnetic field existing between the poles of the armature magnet.

26. The method of producing a motive force by permanent magnets wherein the unpaired electron spinning particles existing within a permanent magnet are utilised for producing a motive force comprising forming a stator magnetic field track by means of at least one permanent magnet, producing an armature magnetic field by means of a permanent magnet and shaping and locating said magnetic fields in such a manner as to produce relative continuous unidirectional motion between said stator and armature field producing magnets.

27. The method of producing a motive force by permanent magnets as in claim 26 wherein said stator magnetic field is substantially of a single polarity.

28. The method of producing a motive force by permanent magnets as in claim 26 including concentrating the magnetic field of said stator field track and armature magnetic field.

HAROLD EWING: THE CAROUSEL ELECTRIC GENERATOR

US Patent 5,625,241 29th April 1997 Inventor: Harold E. Ewing et al.

CAROUSEL ELECTRIC GENERATOR

This is a reworded excerpt form this patent which shows a compact, self-powered, combined permanent magnet motor and electrical generator. There is a little extra information at the end of this document.

ABSTRACT

A permanent magnet generator or motor having stationary coils positioned in a circle, a rotor on which are mounted permanent magnets grouped in sectors and positioned to move adjacent to the coils, and a carousel carrying corresponding groups of permanent magnets through the centres of the coils, the carousel movies with the rotor by virtue of its being magnetically coupled to it.

Inventors:
Ewing, Harold E. (Chandler, AZ, US)
Chapman, Russell R. (Mesa, AZ, US)
Porter, David R. (Mesa, AZ, US)

Assignee:
Energy Research Corporation (Mesa, AZ)

US Patent References:

3610974	Oct, 1971	Kenyon	310/49.
4547713	Oct, 1985	Langley et al.	318/254.
5117142	May, 1992	Von Zweygbergk	310/156.
5289072	Feb, 1994	Lange	310/266.
5293093	Mar, 1994	Warner	310/254.
5304883	Apr, 1994	Denk	310/180.

BACKGROUND OF THE INVENTION

There are numerous applications for small electric generators in ratings of a few kilowatts or less. Examples include electric power sources for emergency lighting in commercial and residential buildings, power sources for remote locations such as mountain cabins, and portable power sources for motor homes, pleasure boats, etc.

In all of these applications, system reliability is a primary concern. Because the power system is likely to sit idle for long periods of time without the benefit of periodic maintenance, and because the owner-operator is often inexperienced in the maintenance and operation of such equipment, the desired level of reliability can only be achieved through system simplicity and the elimination of such components as batteries or other secondary power sources which are commonly employed for generator field excitation.

Another important feature for such generating equipment is miniaturisation particularly in the case of portable equipment. It is important to be able to produce the required level of power in a relatively small generator.

Both of these requirements are addressed in the present invention through a novel adaptation of the permanent magnet generator or magneto in a design that lends itself to high frequency operation as a means for maximising power output per unit volume.

DESCRIPTION OF THE PRIOR ART

Permanent magnet generators or magnetos have been employed widely for many years. Early applications of such generators include the supply of electric current for spark plugs in automobiles and aeroplanes. Early telephones used magnetos to obtain electrical energy for ringing. The Model T Ford automobile also used magnetos to power its electric lights.

The present invention differs from prior art magnetos in terms of its novel physical structure in which a multiplicity of permanent magnets and electrical windings are arranged in a fashion which permits high-speed/high-frequency operation as a means for meeting the miniaturisation requirement. In addition, the design is enhanced through the use of a rotating carousel which carries a multiplicity of field source magnets through the centres of the stationary electric windings in which the generated voltage is thereby induced.

SUMMARY OF THE INVENTION

In accordance with the invention claimed, an improved permanent magnet electric generator is provided with a capability for delivering a relatively high level of output power from a small and compact structure. The incorporation of a rotating carousel for the transport of the primary field magnets through the electrical windings in which induction occurs enhances field strength in the locations critical to generation.

It is, therefore, one object of this invention to provide an improved permanent magnet generator or magneto for the generation of electrical power. Another object of this invention is to provide in such a generator a relatively high level of electrical power from a small and compact structure. A further object of this invention is to achieve such a high level of electrical power by virtue of the high rotational speed and high frequency operation of which the generator of the invention is capable.

A further object of this invention is to provide such a high frequency capability through the use of a novel field structure in which the primary permanent magnets are carried through the centres of the induction windings of the generator by a rotating carousel.

A still further object of this invention is to provide a means for driving the rotating carousel without the aid of mechanical coupling but rather by virtue of magnetic coupling between other mechanically driven magnets and those mounted on the carousel.

A still further object of this invention is to provide an enhanced capability for high speed/high frequency operation through the use of an air bearing as a support for the rotating carousel.

Yet another object of this invention is to provide in such an improved generator a sufficiently high magnetic field density in the locations critical to voltage generation without resort to the use of laminations or other media to channel the magnetic field.

Further objects an advantages of the invention will become apparent as the following description proceeds and the features of novelty which characterise the invention will be pointed out with particularity in the claims annexed to and forming a part of this specification.

BRIEF DESCRIPTION OF THE DRAWINGS

The present invention may be more readily described by reference to the accompanying drawings, in which:

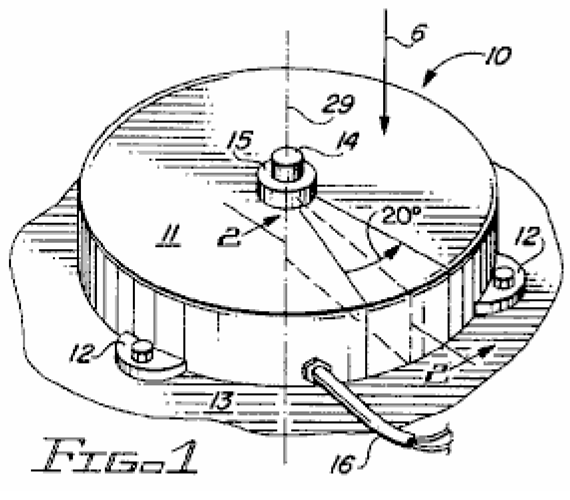

FIG.1

Fig.1 is a simplified perspective view of the carousel electric generator of the invention;

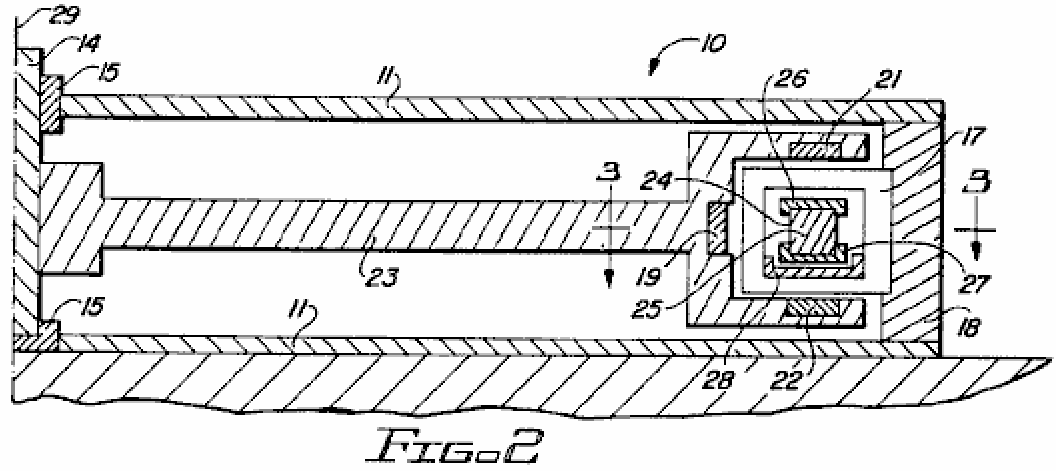

Fig.2

Fig.2 is a cross-sectional view of **Fig.1** taken along line **2--2**;

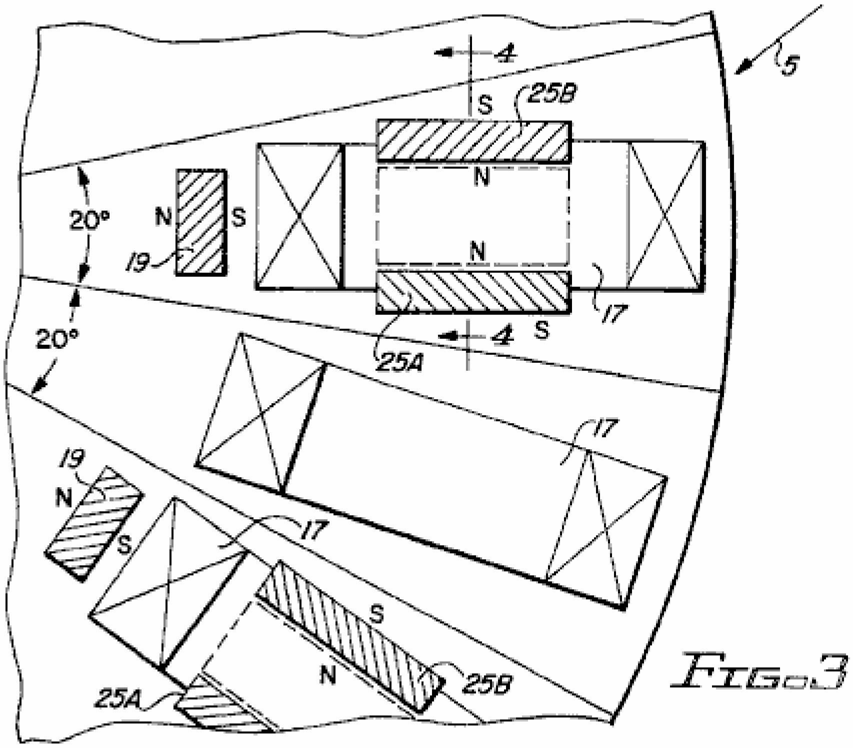

Fig.3

Fig.3 is a cross-sectional view of the generator of **Fig.1** and **Fig.2** taken along line **3--3** of **Fig.2**;

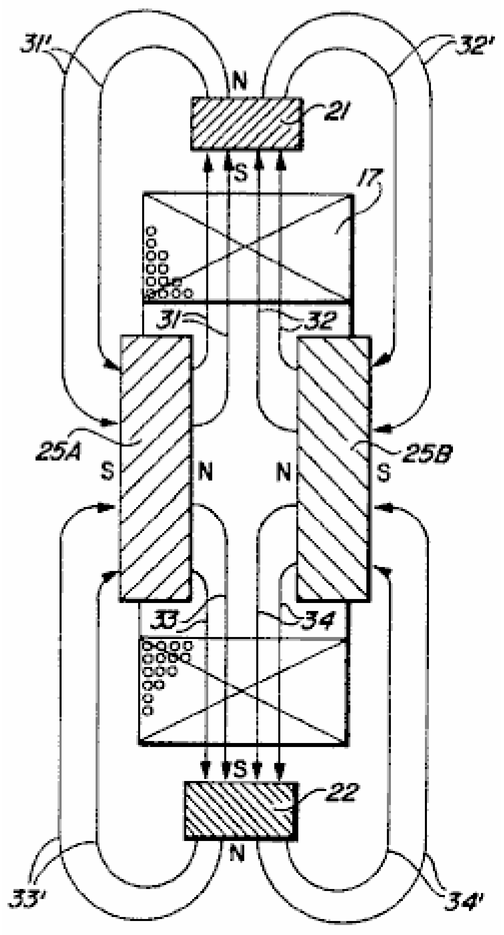

FIG. 4

Fig.4 is a cross-sectional view of **Fig.3** taken along line **4--4**;

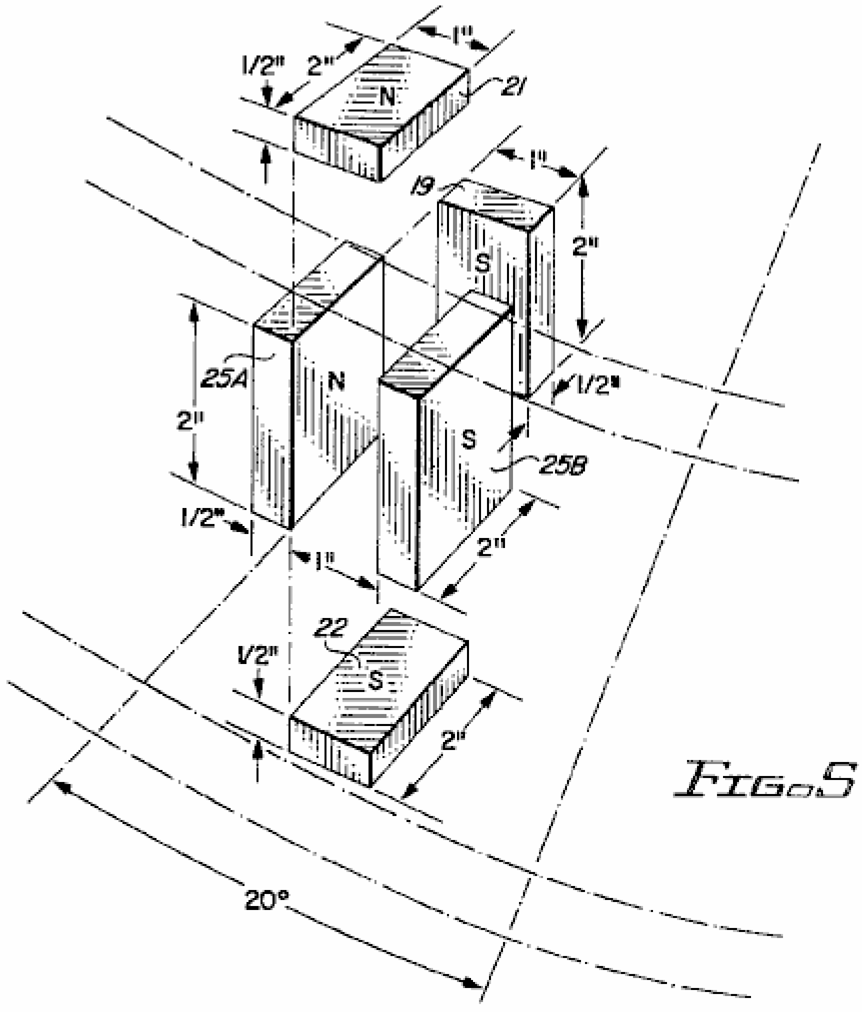

FIG. 5

Fig.5 is a partial perspective view showing the orientation of a group of permanent magnets within a twenty degree sector of the generator of the invention as viewed in the direction of arrow **5** of **Fig.3**;

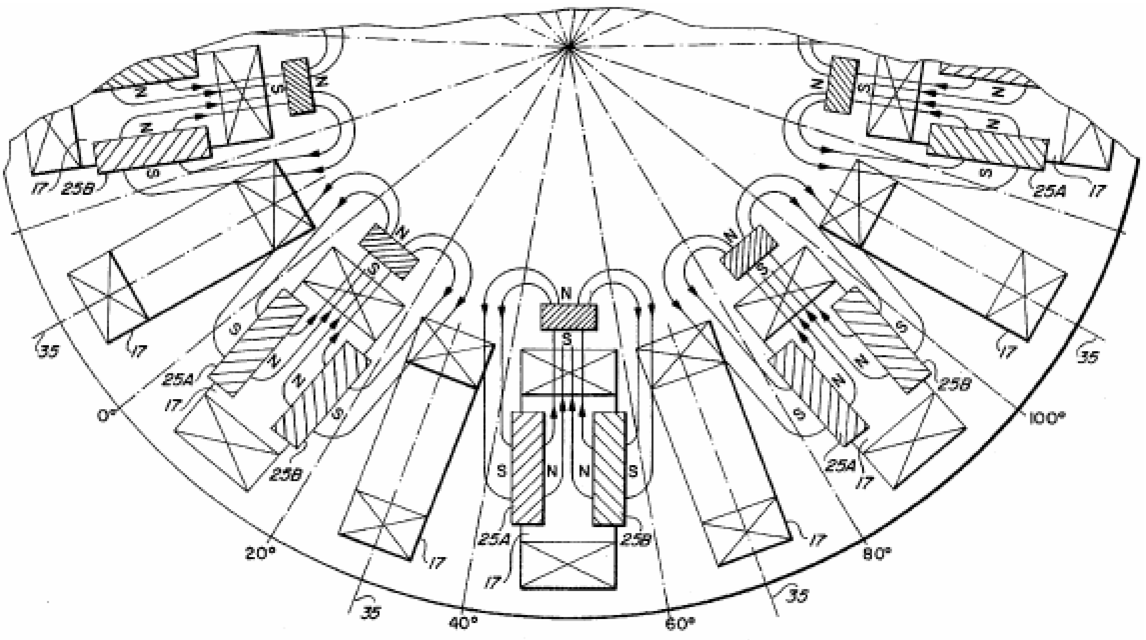

FIG. 6

Fig.6 is an illustration of the physical arrangement of electrical windings and permanent magnets within the generator of the invention as viewed in the direction of arrow **6** in **Fig.1**;

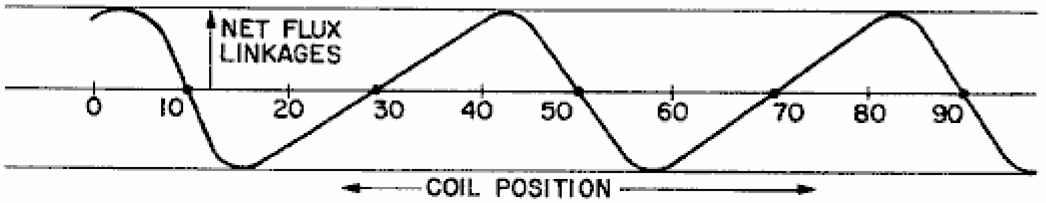

FIG. 7

Fig.7 is a wave form showing flux linkages for a given winding as a function of rotational position of the winding relative to the permanent magnets;

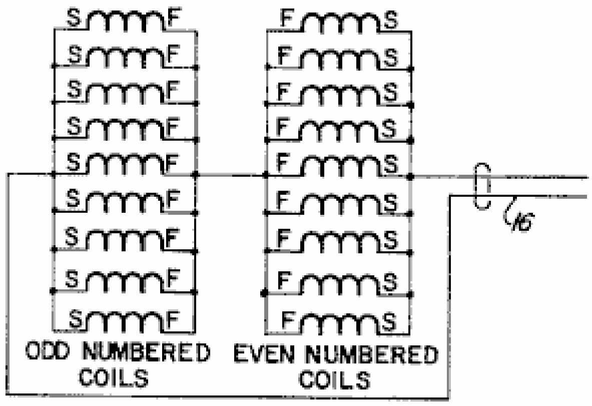

FIG. 8

Fig.8 is a schematic diagram showing the proper connection of the generator windings for a high current low voltage configuration of the generator;

FIG. 9

Fig.9 is a schematic diagram showing a series connection of generator coils for a low current, high voltage configuration;

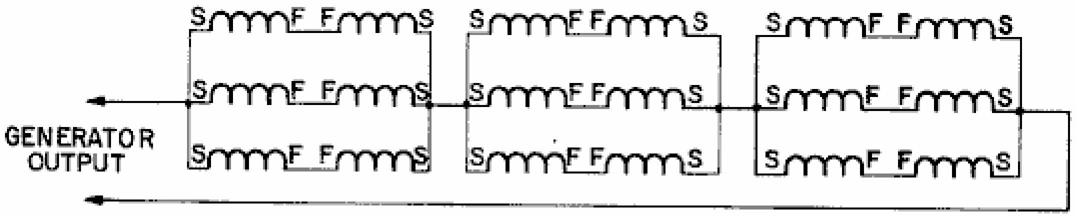

FIG. 10

Fig.10 is a schematic diagram showing a series/parallel connection of generator windings for intermediate current and voltage operation;

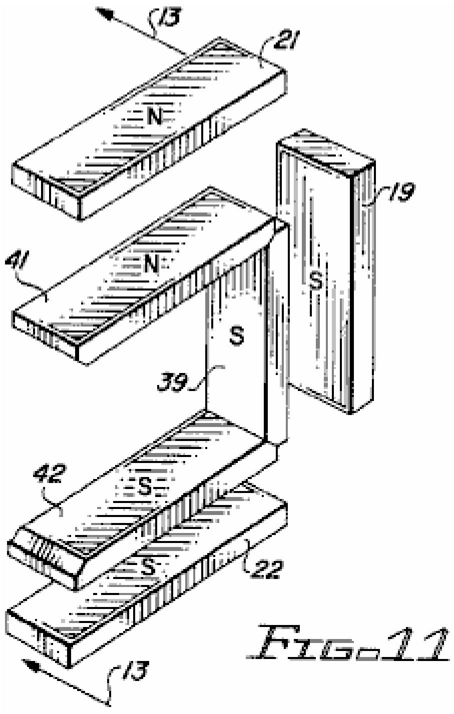

FIG. 11

Fig.11 is a perspective presentation of a modified carousel magnet configuration employed in a second embodiment of the invention;

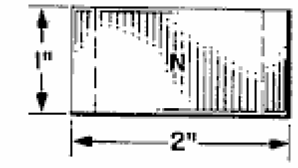

FIG. 12A

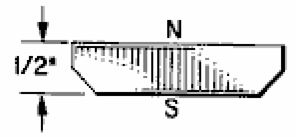

FIG. 12B

Fig.12A and **Fig.12B** show upper and lower views of the carousel magnets of **Fig.11**;

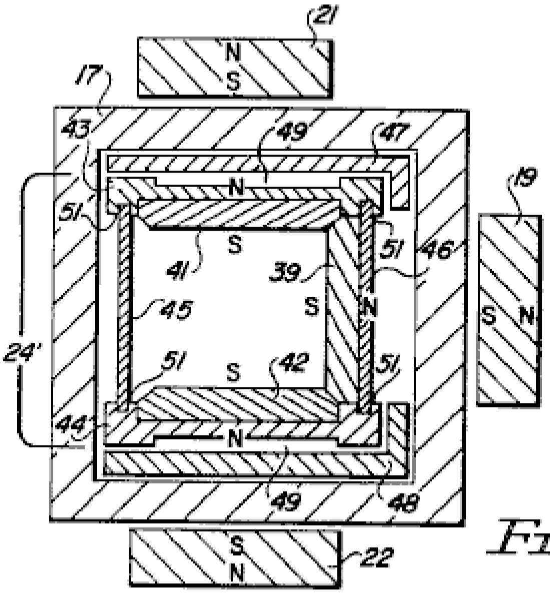

FIG. 13

Fig.13 is a cross-sectional view of the modified magnet configuration of **Fig.11** taken along line **13--13** with other features of the modified carousel structure also shown;

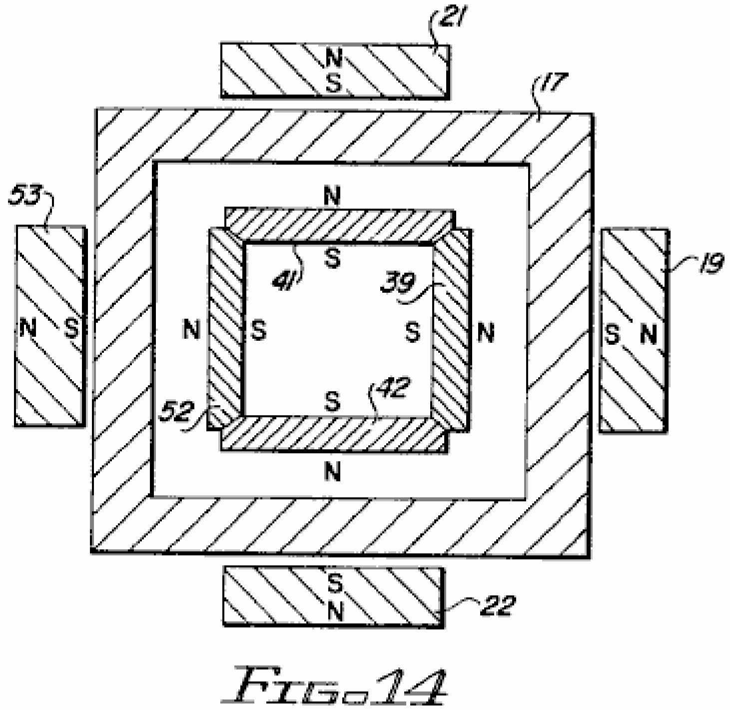

FIG. 14

Fig.14 is a modification of the carousel structure shown in **Figs. 1-13** wherein a fourth carousel magnet is positioned at each station; and

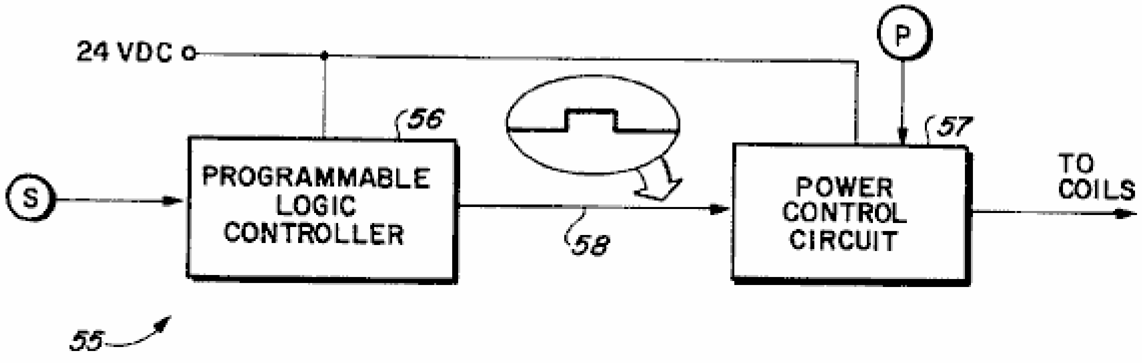

FIG. 15

Fig.15 illustrates the use of the claimed device as a pulsed direct current power source.

DESCRIPTION OF THE PREFERRED EMBODIMENT

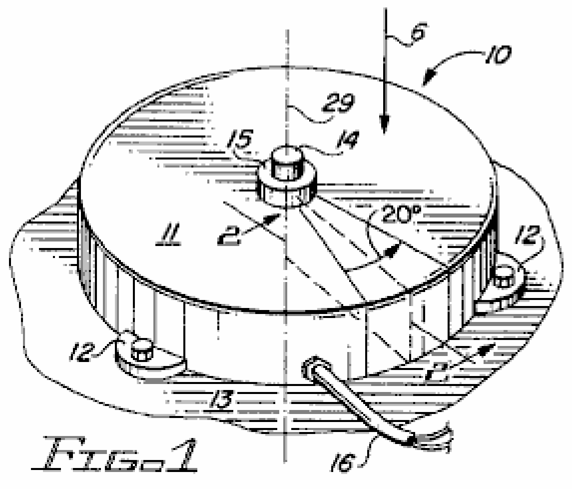

FIG.1

Referring more particularly to the drawings by characters of reference, **Fig.1** shows the external proportions of a carousel electric generator **10** of the invention. As shown in **Fig.1**, generator **10** is enclosed by a housing **11** with mounting feet **12** suitable for securing the generator to a flat surface **13**. The surface **13** is preferably horizontal, as shown in **Fig.1**.

Housing **11** has the proportions of a short cylinder. A drive shaft **14** extends axially from housing **11** through a bearing **15**. The electrical output of the generator is brought out through a cable **16**.

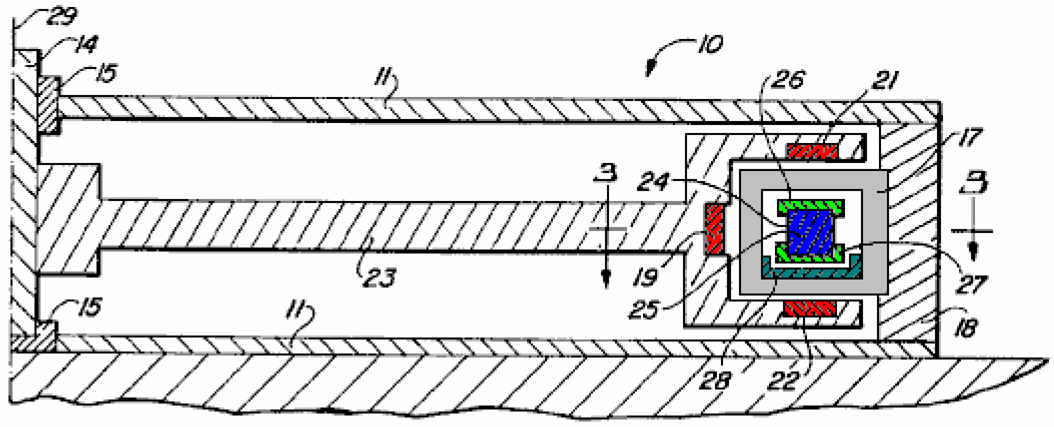

FIG.2

The cross-sectional view of **Fig.2** shows the active elements incorporated in one twenty degree sector of the stator and in one twenty degree sector of the rotor.

In the first implementation of the invention, there are eighteen identical stator sectors, each incorporating a winding or coil **17** wound about a rectangular coil frame or bobbin. Coil **17** is held by a stator frame **18** which may also serve as an outer wall of frame **11**.

The rotor is also divided into eighteen sectors, nine of which incorporate three permanent magnets each, including an inboard rotor magnet **19**, an upper rotor magnet **21** and a lower rotor magnet **22**. All three of these magnets have their south poles facing coil **17**, and all three are mounted directly on rotor frame **23** which is secured directly to drive shaft **14**.

The other nine sectors of the rotor are empty, i.e. they are not populated with magnets. The unpopulated sectors are alternated with the populated sectors so that adjacent populated sectors are separated by an unpopulated sector as shown in **Fig.3** and **Fig.6**.

With reference again to **Fig.2**, generator **10** also incorporates a carousel **24**. The carousel comprises nine pairs of carousel magnets **25** clamped between upper and lower retainer rings **26** and **27**, respectively. The lower retainer ring **27** rests inside an air bearing channel **28** which is secured to stator **18** inside the bobbin of coil **17**. Air passages (not shown) admit air into the space between the lower surface of ring **27** and the upper or inside surface of channel **28**. This arrangement comprises an air bearing which permits carousel **24** to rotate freely within the coils **17** about rotational axis **29** of rotor frame **23**.

Carousel **24** is also divided into **18** twenty-degree sectors, including nine populated sectors interspersed with nine unpopulated sectors in an alternating sequence. Each of the nine populated sectors incorporates a pair of carousel magnets as described in the preceding paragraph.

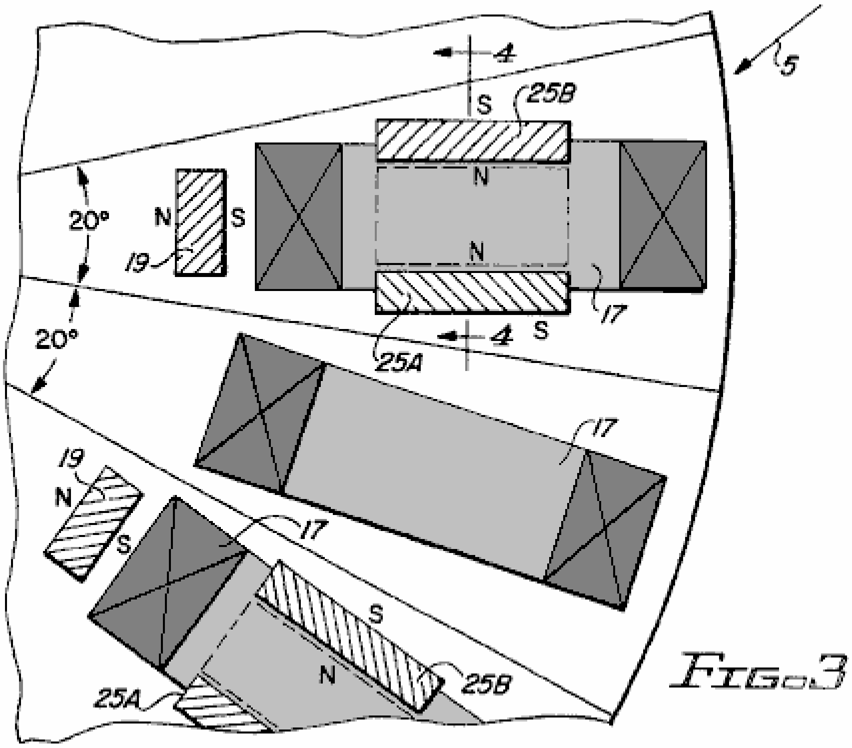

FIG. 3

The geometrical relationship between the rotor magnets, the carousel magnets and the coils, is further clarified by **Fig.3**, **Fig.4** and **Fig.5**. In each of the three figures, the centre of each populated rotor sector is shown aligned with the centre of a coil **17**. Each populated carousel sector, which is magnetically locked into position with a populated rotor sector, is thus also aligned with a coil **17**.

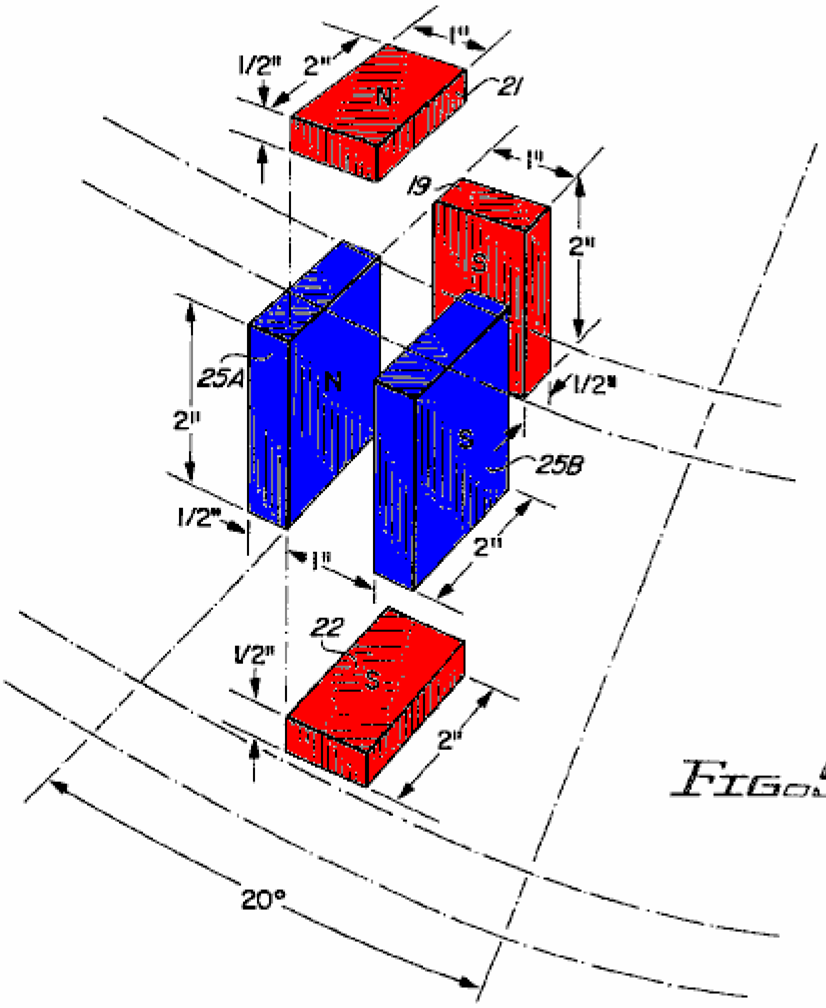

Fig.5

In an early implementation of the invention, the dimensions and spacings of the rotor magnets **19**, **21** and **22** and carousel magnets, **25A** and **25B** of carousel magnet pairs **25** were as shown in **Fig.5**. Each of the rotor magnets **19**, **21** and **22** measured one inch by two inches by one-half inch with north and south poles at opposite one-inch by two-inch faces. Each of the carousel magnets **25A** and **25B** measured two inches by two inches by one-half inch with north and south poles at opposite two-inch by two-inch faces. The magnets were obtained from Magnet Sales and Manufacturing, Culver City, Calif. The carousel magnets were part No.35NE2812832; the rotor magnets were custom parts of equivalent strength (MMF) but half the cross section of the carousel magnets.

Coil supports and other stationary members located within magnetic field patterns are fabricated from Delrin or Teflon plastic or equivalent materials. The use of aluminium or other metals introduce eddy current losses and in some cases excessive friction.

As shown in **Fig.5**, carousel magnets **25A** and **25B** stand on edge, parallel with each other, their north poles facing each other, and spaced one inch apart. When viewed from directly above the carousel magnets, the space between the two magnets **25A** and **25B** appears as a one-inch by two-inch rectangle. When the carousel magnet pair **25** is perfectly locked into position magnetically, upper rotor magnet **21** is directly above this one-inch by two-inch rectangle, lower rotor magnet **22** is directly below it, and their one-inch by two-inch faces are directly aligned with it, the south poles of the two magnets **21** and **22** facing each other.

In like manner, when viewed from the axis of rotation of generator **10**, the space between carousel magnets **25A** and **25B** again appears as a one-inch by two-inch rectangle, and this rectangle is aligned with the one-inch by two-inch face of magnet **19**, the south pole of magnet **19** facing the carousel magnet pair **25**.

Rotor magnets **19**, **21** and **22** are positioned as near as possible to carousel magnets **25A** and **25B** while still allowing passage for coil **17** over and around the carousel magnets and through the space between the carousel magnets and the rotor magnets.

In an electric generator, the voltage induced in the generator windings is proportional to the product of the number of turns in the winding and the rate of change of flux linkages that is produced as the winding is rotated through the magnetic field. An examination of magnetic field patterns is therefore essential to an understanding of generator operation.

In generator **10**, magnetic flux emanating from the north poles of carousel magnets **25A** and **25B** pass through the rotor magnets and then return to the south poles of the carousel magnets. The total flux field is thus driven by the combined MMF (magnetomotive force) of the carousel and field magnets while the flux patterns are determined by the orientation of the rotor and carousel magnets.

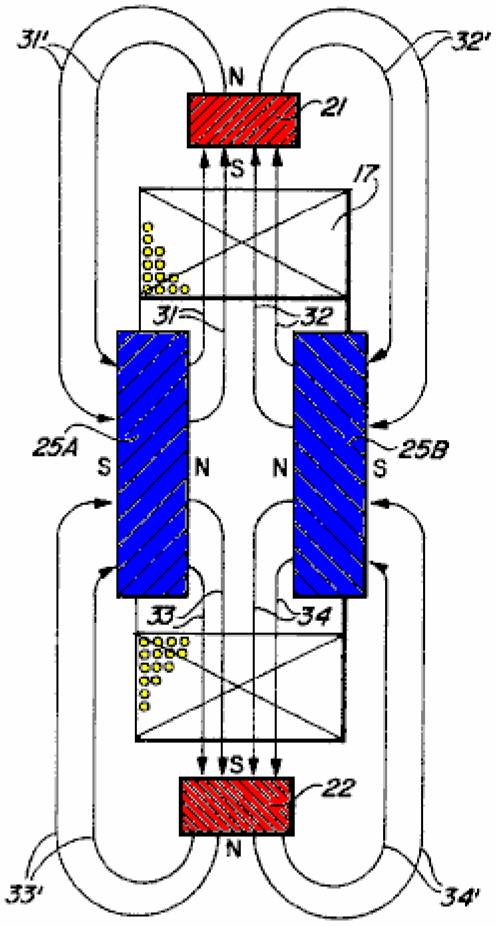

FIG. 4

The flux pattern between carousel magnets **25A** and **25B** and the upper and lower rotor magnets **21** and **22** is illustrated in **Fig.4**. Magnetic flux lines **31** from the north pole of carousel magnet **25A** extend to the south pole of upper rotor magnet **21**, pass through magnet **21** and return as lines **31'** to the south pole of magnet **25A**. Lines **33**, also from the north pole of magnet **25A** extend to the south pole of lower rotor magnet **22**, pass through magnet **22** and return to the south pole of magnet **25A** as lines **33'**. Similarly, lines **32** and **34** from the north pole of magnet **25B** pass through magnets **21** and **22**, respectively, and return as lines **32'** and **34'** to the south pole of magnet **25B**. Flux linkages produced in coil **17** by lines emanating from carousel magnet **25A** are of opposite sense from those emanating from carousel magnet **25B**. Because induced voltage is a function of the rate of change in net flux linkages, it is important to recognise this difference in sense.

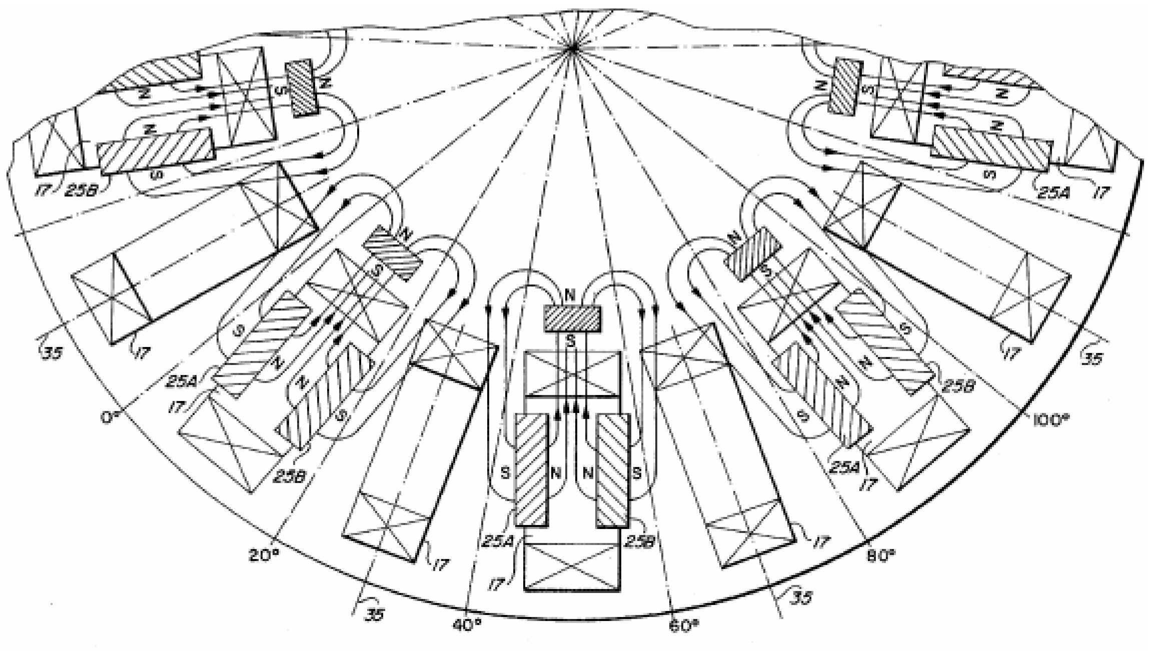

FIG. 6

Fig.6 shows a similar flux pattern for flux between carousel magnets **25A** and **25B** and inboard rotor magnet **19**. Again the lines emanating from carousel magnet **25A** and passing through rotor magnet **19** produce flux linkages in coil **17** that are opposite in sense from those produced by lines from magnet **25B**.

The arrangement of the carousel magnets with the north poles facing each other tends to confine and channel the flux into the desired path. This arrangement replaces the function of magnetic yokes or laminations of more conventional generators.

The flux linkages produced by magnets **25A** and **25B** are opposite in sense regardless of the rotational position of coil **17** including the case where coil **17** is aligned with the carousel and rotor magnets as well as for the same coils when they are aligned with an unpopulated rotor sector.

Taking into account the flux patterns of **Fig.4** and **Fig.6** and recognising the opposing sense conditions just described, net flux linkages for a given coil **17** are deduced as shown in **Fig.7**.

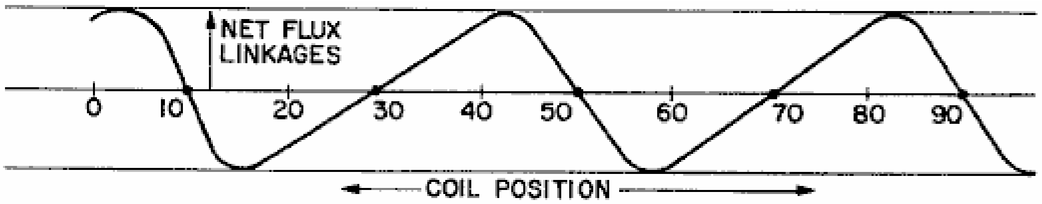

FIG. 7

In **Fig.7**, net flux linkages (coil-turns x lines) are plotted as a function of coil position in degrees. Coil position is here defined as the position of the centreline **35** of coil **17** relative to the angular scale shown in degrees in **Fig.6**. (Note that the coil is stationary and the scale is fixed to the rotor. As the rotor turns in a clockwise direction, the relative position of coil **17** progresses from zero to ten to twenty degrees etc.).

At a relative coil position of ten degrees, the coil is centred between magnets **25A** and **25B**. Assuming symmetrical flux patterns for the two magnets, the flux linkages from one magnet exactly cancel the flux linkages from the other so that net flux linkages are zero. As the relative coil position moves to the right, linkages from magnet **25A** decrease and those from magnet **25B** increase so that net flux linkages build up from zero and passes through a maximum negative value at some point between ten and twenty degrees. After reaching the negative maximum, flux linkages decrease, passing through zero at 30 degrees (where coil **17** is at the centre of an unpopulated rotor sector) and then rising to a positive maximum at some point just beyond 60 degrees. This cyclic variation repeats as the coil is subjected successively to fields from populated and unpopulated rotor sectors.

As the rotor is driven rotationally, net flux linkages for all eighteen coils are altered at a rate that is determined by the flux pattern just described in combination with the rotational velocity of the rotor. Instantaneous voltage induced in coil **17** is a function of the slope of the curve shown in **Fig.7** and rotor velocity, and voltage polarity changes as the slope of the curve alternates between positive and negative.

It is important to note here that a coil positioned at ten degrees is exposed to a negative slope while the adjacent coil is exposed to a positive slope. The polarities of the voltages induced in the two adjacent coils are therefore opposite. For series or parallel connections of odd and even-numbered coils, this polarity discrepancy can be corrected by installing the odd and even numbered coils oppositely (odds rotated end for end relative to evens) or by reversing start and finish connections of odd relative to even numbered coils. Either of these measures will render all coil voltages additive as needed for series or parallel connections. Unless the field patterns for populated and unpopulated sectors are very nearly symmetrical, however, the voltages induced in odd and even numbered coils will have different waveforms. This difference will not be corrected by the coil reversals or reverse connections discussed in the previous paragraph. Unless the voltage waveforms are very nearly the same, circulating currents will flow between even and odd-numbered coils. These circulating currents will reduce generator efficiency.

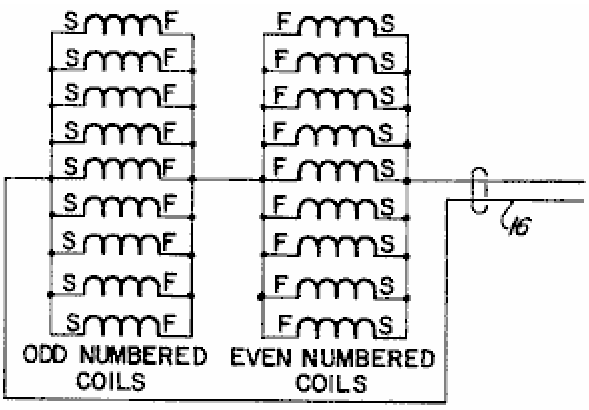

Fig.8

To prevent such circulating currents and the attendant loss in operating efficiency for non symmetrical field patterns and unmatched voltage waveforms, the series-parallel connections of **Fig.8** may be employed in a high-current, low-voltage configuration of the generator. If the eighteen coils are numbered in sequence from one to eighteen according to position about the stator, all even-numbered coils are connected in parallel, all odd-numbered coils are connected in parallel, and the two parallel coil groups are connected in series as shown with reversed polarity for one group so that voltages will be in phase relative to output cable **16**.

Fig.9

For a low-current, high voltage configuration, the series connection of all coils may be employed as shown in **Fig.9**. In this case, it is only necessary to correct the polarity difference between even and odd numbered coils. As mentioned earlier, this can be accomplished by means of opposite start and finish connections for odd and even coils or by installing alternate coils reversed, end for end.

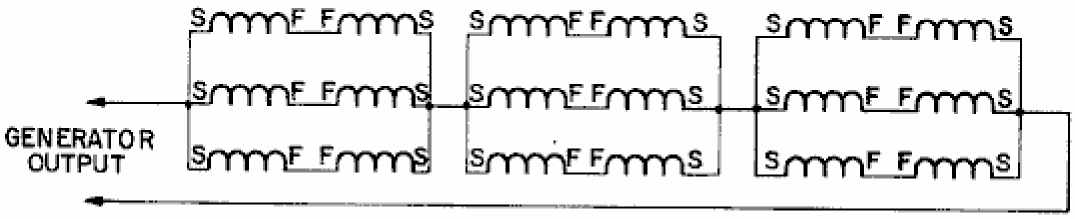

Fig.10

For intermediate current and voltage configurations, various series-parallel connections may be employed. **Fig.10**, for example, shows three groups of six coils each connected in series. Circulating currents will be avoided so long as even-numbered coils are not connected in parallel with odd-numbered coils. Parallel connection of series-connected odd/even pairs as shown is permissible because the waveforms of the series pairs should be very neatly matched.

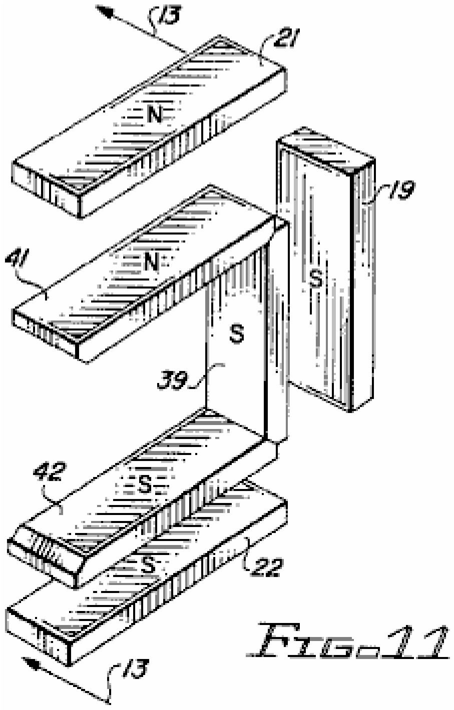

FIG. 11

In another embodiment of the invention, the two large (two-inch by two-inch) carousel magnets are replaced by three smaller magnets as shown in **Fig.11**, **Fig.12** and **Fig.13**. The three carousel magnets comprise an inboard carousel magnet **39**, an upper carousel magnet **41** and a lower carousel magnet **42** arranged in a U-shaped configuration that matches the U-shaped configuration of the rotor magnets **19**, **21** and **22**. As in the case of the first embodiment, the rotor and carousel magnets are present only in alternate sectors of the generator.

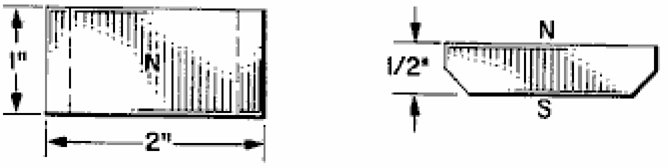

FIG. 12A FIG. 12B

The ends of the carousel magnets are bevelled to permit a more compact arrangement of the three magnets. As shown in **Fig.12**, each magnet measures one inch by two inches by one half inch thick. The south pole occupies the bevelled one-inch by two-inch face and the north pole is at the opposite face.

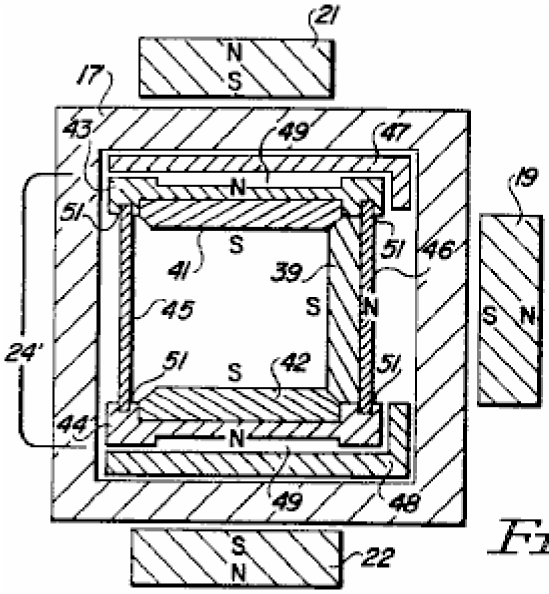

FIG. 13

The modified carousel structure **24'** as shown in **Fig.13** comprises an upper carousel bearing plate **43**, a lower carousel bearing plate **44**, an outer cylindrical wall **45** and an inner cylindrical wall **46**. The upper and lower bearing plates **43** and **44** mate with the upper and lower bearing members **47** and **48**, respectively, which are stationary and secured inside the forms of the coils **17**. Bearing plates **43** and **44** are shaped to provide air channels **49** which serve as air bearings for rotational support of the carousel **24'**. The bearing plates are also slotted to receive the upper and lower edges **51** of cylindrical walls **45** and **46**.

The modified carousel structure **24'** offers a number of advantages over the first embodiment. The matched magnet configuration of the carousel and the rotor provides tighter and more secure coupling between the carousel and the rotor. The smaller carousel magnets also provide a significant reduction in carousel weight. This was found beneficial relative to the smooth and efficient rotational support of the carousel.

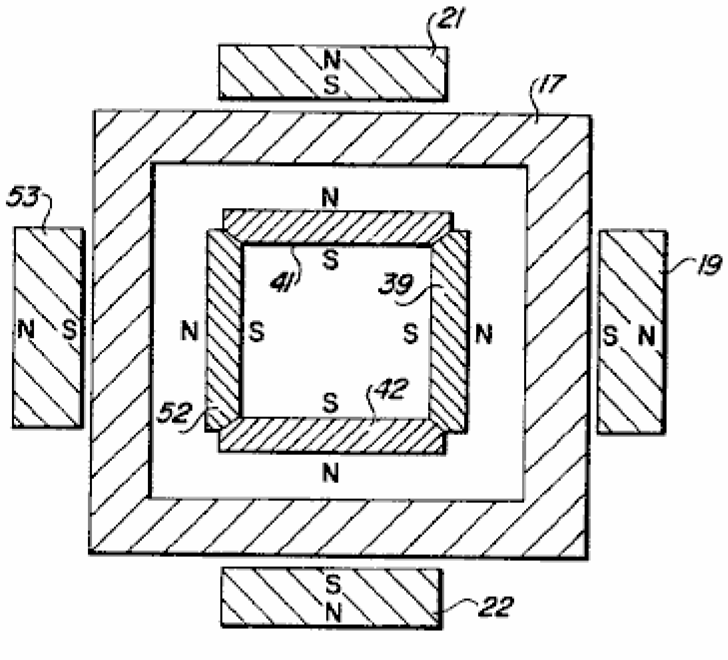

Fig. 14

The modification of the carousel structure as described in the foregoing paragraphs can be taken one step further with the addition of a fourth carousel magnet **52** at each station as shown in **Fig.14**. The four carousel magnets **39**, **41**, **42** and **52** now form a square frame with each of the magnet faces (north poles) facing a corresponding inside face of the coil **17**. Carousel magnets for this modification may again be as shown in **Fig.12**. An additional rotor magnet **53** may also be added as shown, in alignment with carousel magnet **52**. These additional modifications further enhance the field pattern and the degree of coupling between the rotor and the carousel.

The carousel electric generator of the invention is particularly well suited to high speed, high frequency operation where the high speed compensates for lower flux densities than might be achieved with a magnetic medium for routing the field through the generator coils. For many applications, such as emergency lighting, the high frequency is also advantageous. Fluorescent lighting, for example, is more efficient in terms of lumens per watt and the ballasts are smaller at high frequencies.

While the present invention has been directed toward the provision of a compact generator for specialised generator applications, it is also possible to operate the device as a motor by applying an appropriate alternating voltage source to cable **16** and coupling drive shaft **14** to a load.

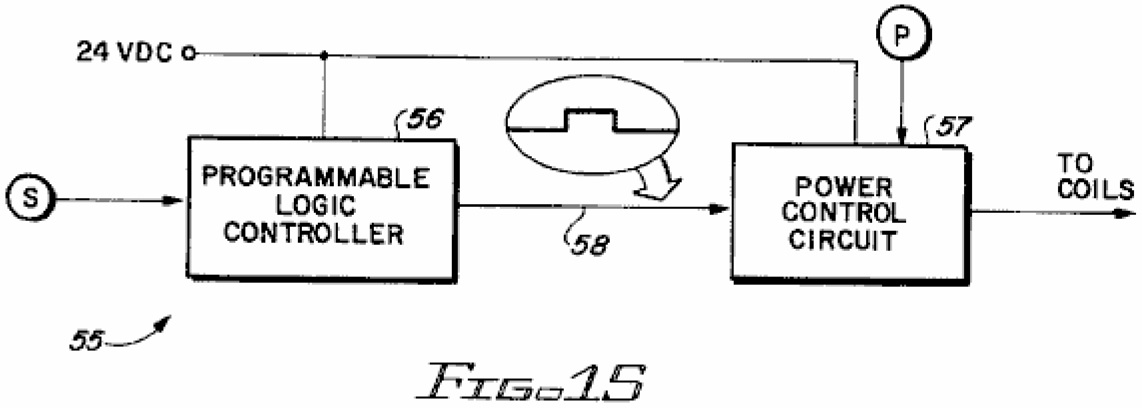

Fig.15

It is also possible to operate the device of the invention as a motor using a pulsed direct-current power source. A control system **55** for providing such operation is illustrated in **Fig.15**. Incorporated in the control system **55** are a rotor position sensor **S**, a programmable logic controller **56**, a power control circuit **57** and a potentiometer **P**.

Based on signals received from sensor **S**, controller **56** determines the appropriate timing for coil excitation to assure maximum torque and smooth operation. This entails the determination of the optimum positions of the rotor and the carousel at the initiation and at the termination of coil excitation. For smooth operation and maximum torque, the force developed by the interacting fields of the magnets and the excited coils should be unidirectional to the maximum possible extent.

Typically, the coil is excited for only 17.5 degrees or less during each 40 degrees of rotor rotation.

The output signal **58** of controller **56** is a binary signal (high or low) that is interpreted as an ON and OFF command for coil excitation.

The power control circuit incorporates a solid state switch in the form of a power transistor or a MOSFET. It responds to the control signal **58** by turning the solid state switch ON and OFF to initiate and terminate coil excitation. Instantaneous voltage amplitude supplied to the coils during excitation is controlled by means of potentiometer **P**. Motor speed and torque are thus responsive to potentiometer adjustments.

The device is also adaptable for operation as a motor using a commutator and brushes for control of coil excitation. In this case, the commutator and brushes replace the programmable logic controller and the power control circuit as the means for providing pulsed DC excitation. This approach is less flexible but perhaps more efficient than the programmable control system described earlier.

It will now be recognised that a novel and useful generator has been provided in accordance with the stated objects of the invention, and while but a few embodiments of the invention have been illustrated and described it will be apparent to those skilled in the art that various changes and modifications may be made without departing from the spirit of the invention or from the scope of the appended claims.

Notes:

I found it a little difficult to visualise the carousel part, so the following may be helpful for some people. The “carousel” is formed from two circular plastic channels like this:

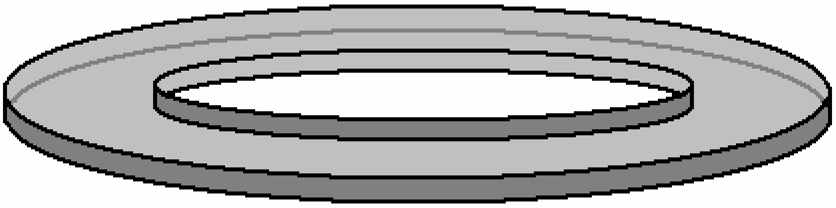

These channels are placed, one below and one above, nine pairs of carousel magnets (coloured blue in some of the patent diagrams shown above. Each carousel magnet sits in the lower channel:

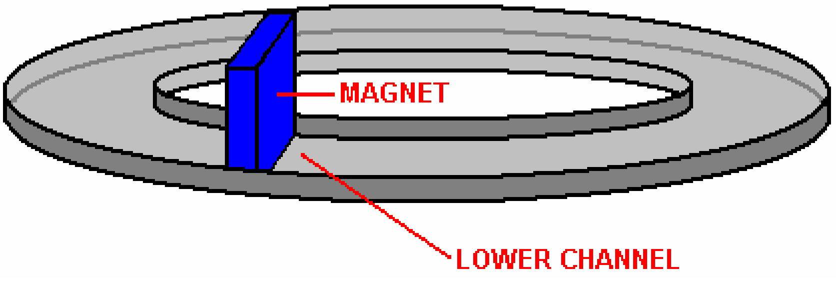

And these magnets are secured as a unit by an identical plastic channel inverted and placed on top of the magnet set:

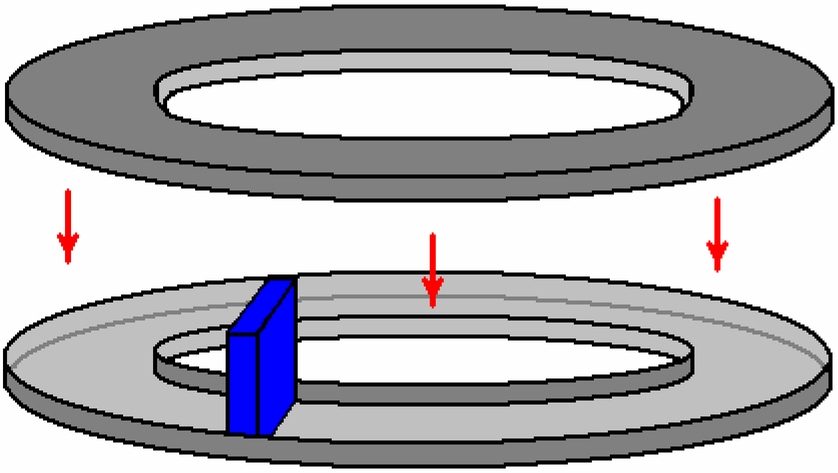

And this ring assembly of magnets spins inside the wire coils used to generate the electrical output. The ring spins inside the coils because the nine pairs of magnets in the ring, lock in place opposite the matching nine pairs of magnets in the rotor and the magnetic force and rotor rotation causes the ring to spin inside the coils.

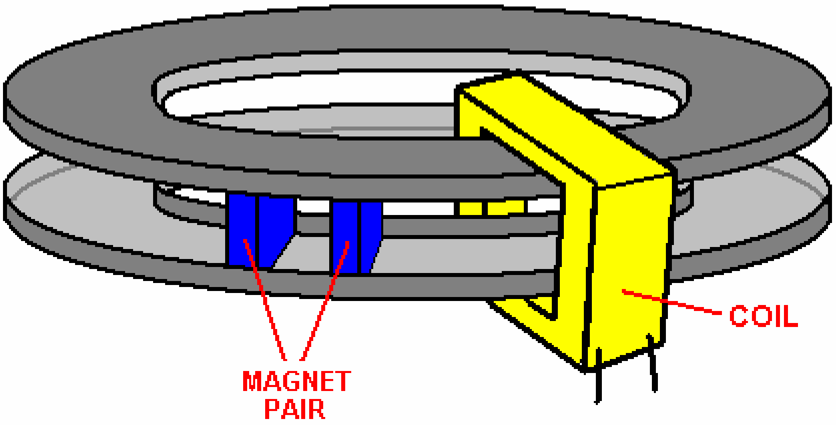

PAVEL IMRIS: OPTICAL GENERATOR

US Patent 3,781,601 25th December 1973 Inventor: Pavel Imris

OPTICAL GENERATOR OF AN ELECTROSTATIC FIELD HAVING LONGITUDINAL OSCILLATION AT LIGHT FREQUENCIES FOR USE IN AN ELECTRICAL CIRCUIT

Please note that this is a re-worded excerpt from this patent. It describes a gas-filled tube which allows many standard 40-watt fluorescent tubes to be powered using less than 1-watt of power each.

ABSTRACT

An Optical generator of an electrostatic field at light frequencies for use in an electrical circuit, the generator having a pair of spaced-apart electrodes in a gas-filled tube of quartz glass or similar material with at least one capacitor cap or plate adjacent to one electrode and a dielectric filled container enclosing the tube, the generator substantially increasing the electrical efficiency of the electrical circuit.

BACKGROUND OF THE INVENTION

This invention relates to improved electrical circuits, and more particularly to circuits utilising an optical generator of an electrostatic field at light frequencies.

The measure of the efficiency of an electrical circuit may broadly be defined as the ratio of the output energy in the desired form (such as light in a lighting circuit) to the input electrical energy. Up to now, the efficiency of many circuits has not been very high. For example, in a lighting circuit using 40 watt fluorescent lamps, only about 8.8 watts of the input energy per lamp is actually converted to visible light, thus representing an efficiency of only about 22%. The remaining 31.2 watts is dissipated primarily in the form of heat.

It has been suggested that with lighting circuits having fluorescent lamps, increasing the frequency of the applied current will raise the overall circuit efficiency. While at an operating frequency of 60 Hz, the efficiency is 22%, if the frequency is raised to 1 Mhz, the circuit efficiency would only rise to some 25.5%. Also, if the input frequency were raised to 10 Ghz, the overall circuit efficiency would only be 35%.

SUMMARY OF THE PRESENT INVENTION

The present invention utilises an optical electrostatic generator which is effective for producing high frequencies in the visible light range of about 10^{14} to 10^{23} Hz. The operation and theory of the optical electrostatic generator has been described and discussed in my co-pending application serial No. 5,248, filed on 23rd January 1970. As stated in my co-pending application, the present optical electrostatic generator does not perform in accordance with the accepted norms and standards of ordinary electromagnetic frequencies.

The optical electrostatic generator as utilised in the present invention can generate a wide range of frequencies between several Hertz and those in the light frequency. Accordingly, it is an object of the present invention to provide improved electrical energy circuits utilising my optical electrostatic generator, whereby the output energy in the desired form will be substantially more efficient than possible to date, using standard circuit techniques and equipment. It is a further object of the present invention to provide such a circuit for use in fluorescent lighting or other lighting circuits. It is also an object of the present invention to provide a circuit with may be used in conjunction with electrostatic precipitators for dust and particle collection and removal, as well as many other purposes.

DESCRIPTION OF THE DRAWINGS

Fig.1 is a schematic layout showing an optical electrostatic generator of the present invention, utilised in a lighting circuit for fluorescent lamps:

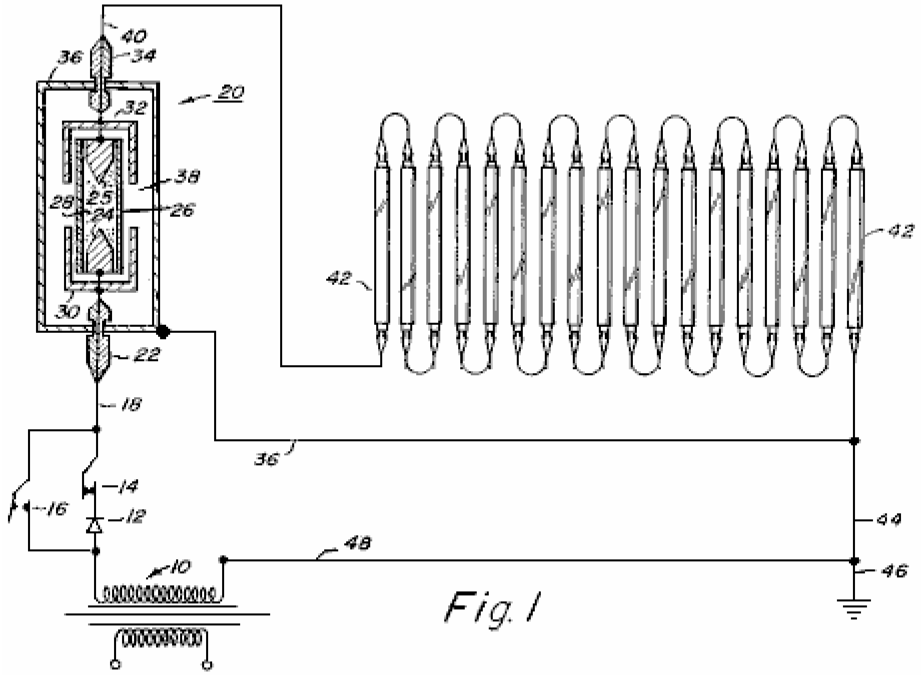

Fig.2 is a schematic layout of a high-voltage circuit incorporating an optical electrostatic generator:

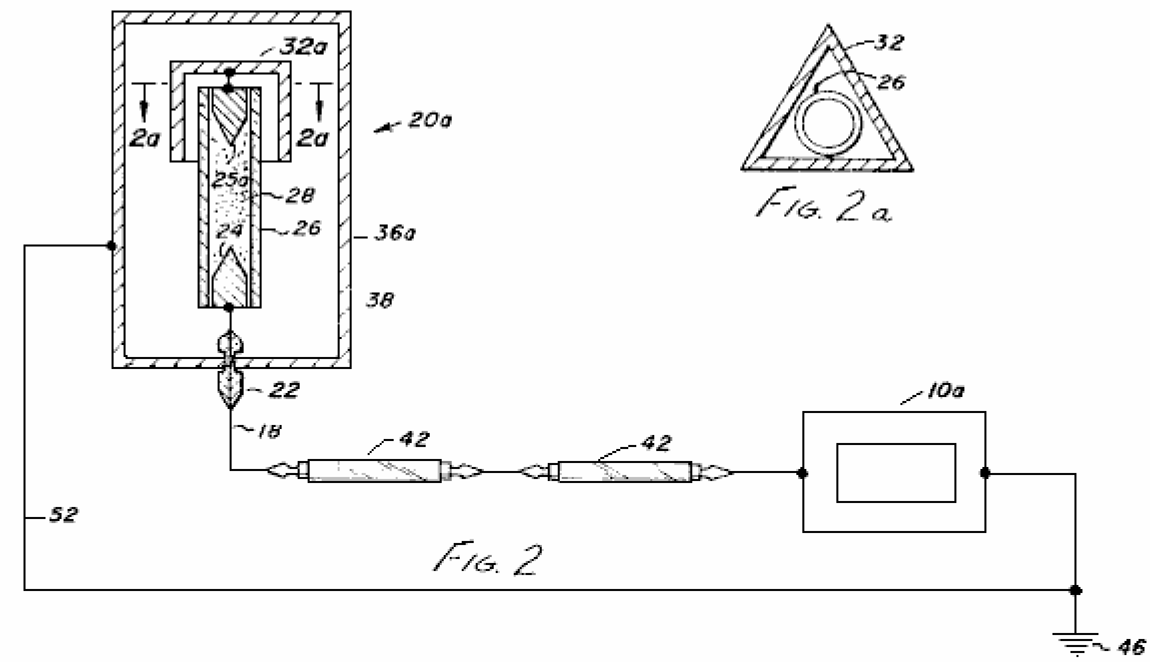

Fig.2A is a sectional view through a portion of the generator and

Fig.3 is a schematic sectional view showing an optical electrostatic generator in accordance with the present invention, particularly for use in alternating current circuits, although it may also be used in direct current circuits:

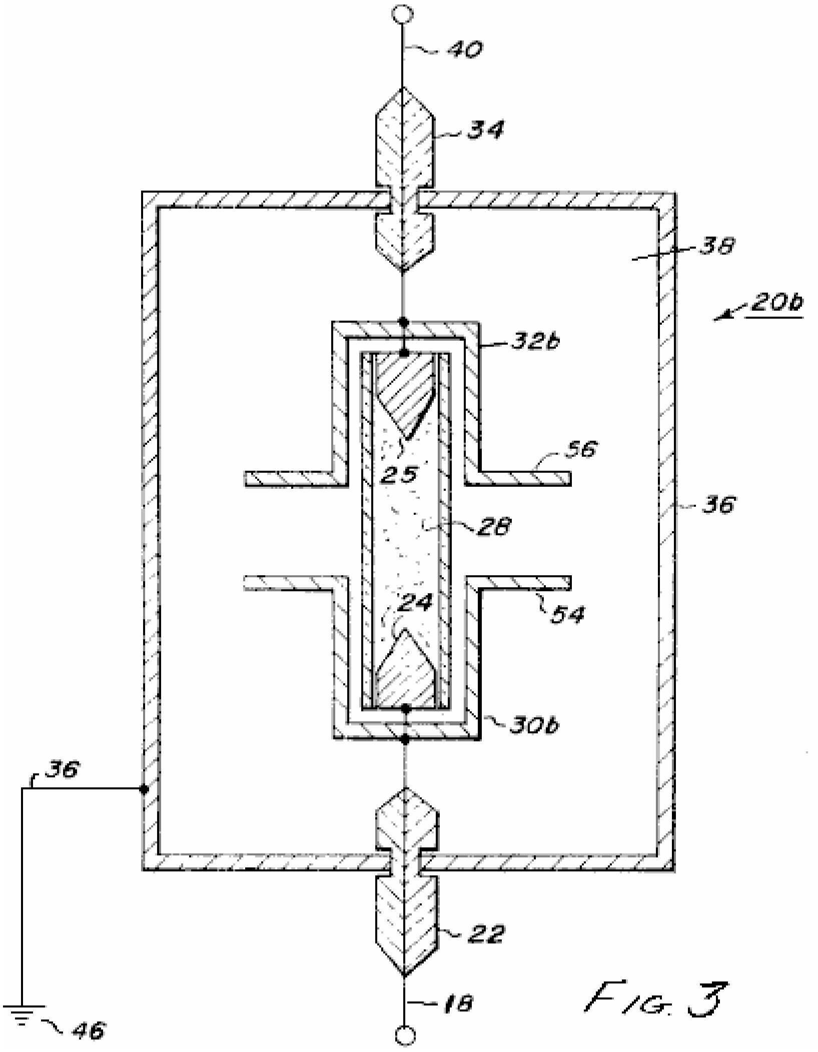

FIG. 3

DESCRIPTION OF THE ILLUSTRATED EMBODIMENTS

Referring to the drawings and to **Fig.1** in particular, a low voltage circuit utilising an optical electrostatic generator is shown. As shown in **Fig.1**, a source of alternating current electrical energy **10**, is connected to a lighting circuit. Connected to one tap of the power source **10** is a rectifier **12** for utilisation when direct current is required. The illustrated circuit is provided with a switch **14** which may be opened or closed depending on whether AC or DC power is used. Switch **14** is opened and a switch **16** is closed when AC is used. With switch **14** closed and switch **16** open, the circuit operates as a DC circuit.

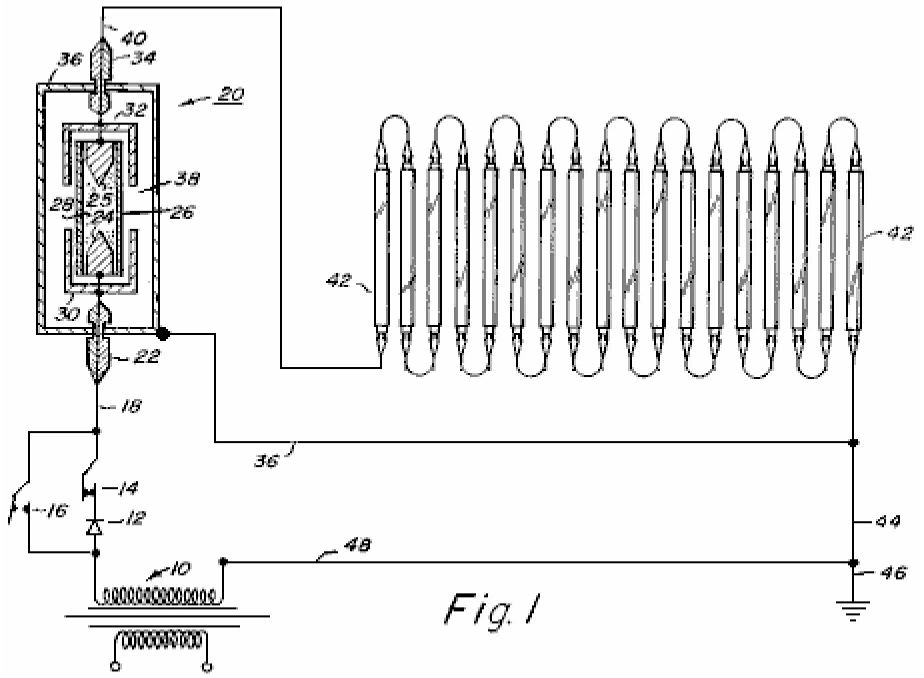

Fig. 1

Extending from switches **14** and **16** is conductor **18** which is connected to an optical electrostatic generator **20**. Conductor **18** is passed through an insulator **22** and connected to an electrode **24**. Spaced from electrode **24** is a second electrode **25**. Enclosing electrodes **24** and **25**, which preferably are made of tungsten or similar material, is a quartz glass tube **26** which is filled with an ionisable gas **28** such as xenon or any other suitable ionisable gas such as argon, krypton, neon, nitrogen or hydrogen, as well as the vapour of metals such as mercury or sodium.

Surrounding each end of tube **26** and adjacent to electrodes **24** and **25**, are capacitor plates **30** and **32** in the form of caps. A conductor is connected to electrode **25** and passed through a second insulator **34**. Surrounding the tube, electrodes and capacitor caps is a metal envelope in the form of a thin sheet of copper or other metal such as aluminium. Envelope **36** is spaced from the conductors leading into and out of the generator by means of insulators **22** and **34**. Envelope **36** is filled with a dielectric material such as transformer oil, highly purified distilled water, nitro-benzene or any other suitable liquid dielectric. In addition, the dielectric may be a solid such as ceramic material with relatively small molecules.

A conductor **40** is connected to electrode **25**, passed through insulator **24** and then connected to a series of fluorescent lamps **42** which are connected in series. It is the lamps **42** which will be the measure of the efficiency of the circuit containing the optical electrostatic generator **20**. A conductor **44** completes the circuit from the fluorescent lamps to the tap of the source of electrical energy **10**. In addition, the circuit is connected to a ground **46** by another conductor **48**. Envelope **36** is also grounded by lead **50** and in the illustrated diagram, lead **50** is connected to the conductor **44**.

The capacitor caps or plates **30** and **32**, form a relative capacitor with the discharge tube. When a high voltage is applied to the electrode of the discharge tube, the ions of gas are excited and brought to a higher potential than their environment, i.e. the envelope and the dielectric surrounding it. At this point, the ionised gas in effect becomes one plate of a relative capacitor in co-operation with the capacitor caps or plates **30** and **32**.

When this relative capacitor is discharged, the electric current does not decrease as would normally be expected. Instead, it remains substantially constant due to the relationship between the relative capacitor and an absolute capacitor which is formed between the ionised gas and the spaced metal envelope **36**. An oscillation effect occurs in the relative capacitor, but the electrical condition in the absolute capacitor remains substantially constant.

As also described in the co-pending application serial No. 5,248, there is an oscillation effect between the ionised gas in the discharge lamp and the metallic envelope **36** will be present if the capacitor caps are eliminated, but the efficiency of the electrostatic generator will be substantially decreased.

The face of the electrode can be any desired shape. However, a conical point of 60^0 has been found to be satisfactory and it is believed to have an influence on the efficiency of the generator.

In addition, the type of gas selected for use in tube **26**, as well as the pressure of the gas in the tube, also affect the efficiency of the generator, and in turn, the efficiency of the electrical circuit.

To demonstrate the increased efficiency of an electrical circuit utilising the optical electrostatic generator of the present invention as well as the relationship between gas pressure and electrical efficiency, a circuit similar to that shown in **Fig.1** may be used with 100 standard 40 watt, cool-white fluorescent lamps connected in series. The optical electrostatic generator includes a quartz glass tube filled with xenon, with a series of different tubes being used because of the different gas pressures being tested.

Table 1 shows the data to be obtained relating to the optical electrostatic generator. **Table 2** shows the lamp performance and efficiency for each of the tests shown in **Table 1**. The following is a description of the data in each of the columns of **Tables 1 and 2**.

Column	Description
B	**Gas used in discharge tube**
C	**Gas pressure in tube** (in torrs)
D	**Field strength across the tube** (measured in volts per cm. of length between the electrodes)
E	**Current density** (measured in microamps per sq. mm. of tube cross-sectional area)
F	**Current** (measured in amps)
G	**Power across the tube** (calculated in watts per cm. of length between the electrodes)
H	**Voltage per lamp** (measured in volts)
K	**Current** (measured in amps)
L	**Resistance** (calculated in ohms)
M	**Input power per lamp** (calculated in watts)
N	**Light output** (measured in lumens)

Table 1

		Optical	Generator	Section		
A	**B**	**C**	**D**	**E**	**F**	**G**
Test No.	**Type of discharge lamp**	**Pressure of Xenon**	**Field strength across lamp**	**Current density**	**Current**	**Power str. across lamp**
		(Torr)	**(V/cm)**	**(A/sq.mm)**	**(A)**	**(W/cm.)**
1	Mo elec	-	-	-	-	-
2	Xe	0.01	11.8	353	0.1818	2.14
3	Xe	0.10	19.6	353	0.1818	3.57
4	Xe	1.00	31.4	353	0.1818	5.72
5	Xe	10.00	47.2	353	0.1818	8.58
6	Xe	20.00	55.1	353	0.1818	10.02
7	Xe	30.00	62.9	353	0.1818	11.45
8	Xe	40.00	66.9	353	0.1818	12.16
9	Xe	60.00	70.8	353	0.1818	12.88
10	Xe	80.00	76.7	353	0.1818	13.95
11	Xe	100.00	78.7	353	0.1818	14.31
12	Xe	200.00	90.5	353	0.1818	16.46
13	Xe	300.00	100.4	353	0.1818	18.25
14	Xe	400.00	106.3	353	0.1818	19.32
15	Xe	500.00	110.2	353	0.1818	20.04
16	Xe	600.00	118.1	353	0.1818	21.47
17	Xe	700.00	120.0	353	0.1818	21.83
18	Xe	800.00	122.8	353	0.1818	22.33
19	Xe	900.00	125.9	353	0.1818	22.90
20	Xe	1,000.00	127.9	353	0.1818	23.26
21	Xe	2,000.00	149.6	353	0.1818	27.19
22	Xe	3,000.00	161.4	353	0.1818	29.35
23	Xe	4,000.00	173.2	353	0.1818	31.49
24	Xe	5,000.00	179.1	353	0.1818	32.56

Table 2

		Fluorescent	Lamp	Section	
A	**H**	**K**	**L**	**M**	**N**
Test No.	**Voltage**	**Current**	**Resistance**	**Input Energy**	**Light Output**
	(Volts)	**(Amps)**	**(Ohms)**	**(Watts)**	**(Lumen)**
1	220	0.1818	1,210	40.00	3,200
2	218	0.1818	1,199	39.63	3,200
3	215	0.1818	1,182	39.08	3,200
4	210	0.1818	1,155	38.17	3,200
5	200	0.1818	1,100	36.36	3,200
6	195	0.1818	1,072	35.45	3,200
7	190	0.1818	1,045	34.54	3,200
8	182	0.1818	1,001	33.08	3,200
9	175	0.1818	962	31.81	3,200
10	162	0.1818	891	29.45	3,200
11	155	0.1818	852	28.17	3,200
12	130	0.1818	715	23.63	3,200
13	112	0.1818	616	20.36	3,200
14	100	0.1818	550	18.18	3,200
15	85	0.1818	467	15.45	3,200
16	75	0.1818	412	13.63	3,200
17	67	0.1818	368	12.18	3,200
18	60	0.1818	330	10.90	3,200
19	53	0.1818	291	9.63	3,200
20	50	0.1818	275	9.09	3,200
21	23	0.1818	126	4.18	3,200
22	13	0.1818	71	2.35	3,200
23	8	0.1818	44	1.45	3,200
24	5	0.1818	27	0.90	3,200

The design of a tube construction for use in the optical electrostatic generator of the type used in **Fig.1**, may be accomplished by considering the radius of the tube, the length between the electrodes in the tube and the power across the tube.

If **R** is the minimum inside radius of the tube in centimetres, **L** the minimum length in centimetres between the electrodes, and **W** the power in watts across the lamp, the following formula can be obtained from **Table 1:**

R = (Current [A] / Current Density [A/sq.mm]) / pi

L = 8R

W = L[V/cm] x A

For example, for Test No. 18 in Table 1:
The current is 0.1818 A,
The current density 0.000353 A/sq.mm and
The Voltage Distribution is 122.8 V/cm; therefore

R = $(0.1818 / 0.000353)^2$ /3.14 = 12.80 mm.

L = 8 x R = 8 * 12.8 = 102.4 mm (10.2 cm.)

W = 10.2 x 122.8 x 0.1818 = 227.7 VA or 227.7 watts

The percent efficiency of operation of the fluorescent lamps in Test No. 18 can be calculated from the following equation:

% Efficiency = (Output Energy/Input energy) x 100

Across a single fluorescent lamp, the voltage is 60 volts and the current is 0.1818 amps therefore the input energy to the lamp **42** is 10.90 Watts. The output of the fluorescent lamp is 3,200 lumens which represents 8.8 Watts power of light energy. Thus, the one fluorescent lamp is operating at 80.7% efficiency under these conditions.

However, when the optical generator is the same as described for Test No. 18 and there are 100 fluorescent lamps in series in the circuit, the total power input is 227.7 watts for the optical generator and 1,090 watts for 100 fluorescent lamps, or a total of 1,318 watts. The total power input normally required to operate the 100 fluorescent lamps in a normal circuit would be 100 x 40 = 4,000 watts. So by using the optical generator in the circuit, about 2,680 watts of energy is saved.

Table 1 is an example of the functioning of this invention for a particular fluorescent lamp (40 watt cool white). However, similar data can be obtained for other lighting applications, by those skilled in the art.

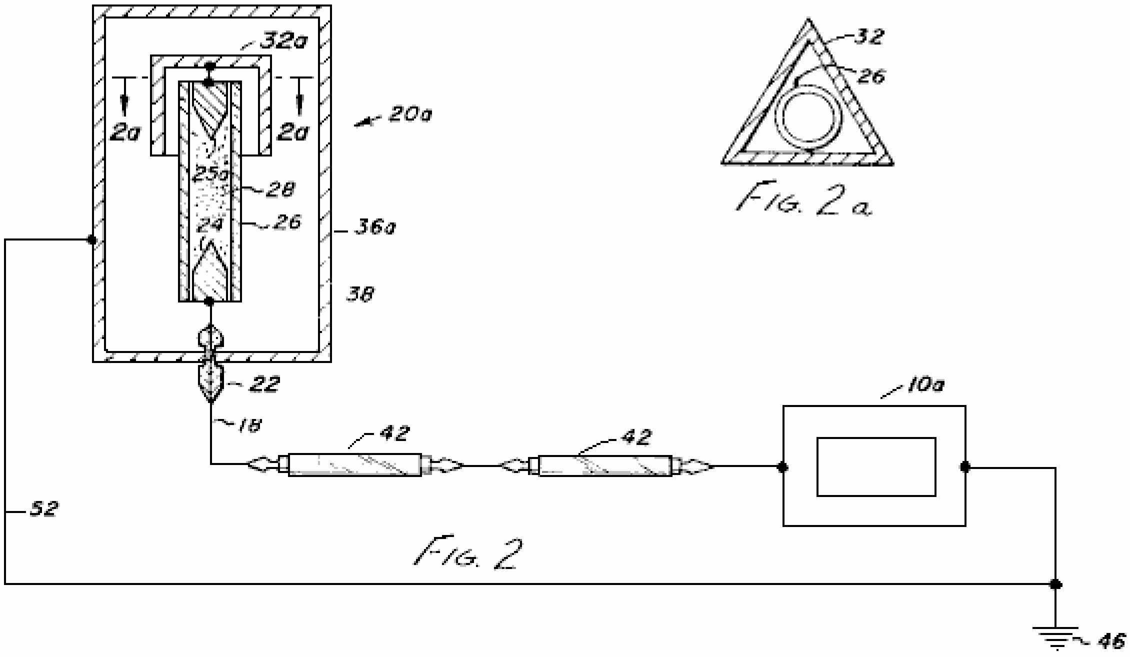

FIG. 2a

FIG. 2

In **Fig.2**, a circuit is shown which uses an optical electrostatic generator **20a**, similar to generator **20** of **Fig.1**. In generator **20**, only one capacitor cap **32a** is used and it is preferably of triangular cross-sectional design. In addition, the second electrode **25a** is connected directly back into the return conductor **52**, similar to the arrangement shown in my co-pending application serial No. 5,248, filed 23rd January 1970.

This arrangement is preferably for very high voltage circuits and the generator is particularly suited for DC usage.

In **Fig.2**, common elements have received the same numbers which were used in **Fig.1**.

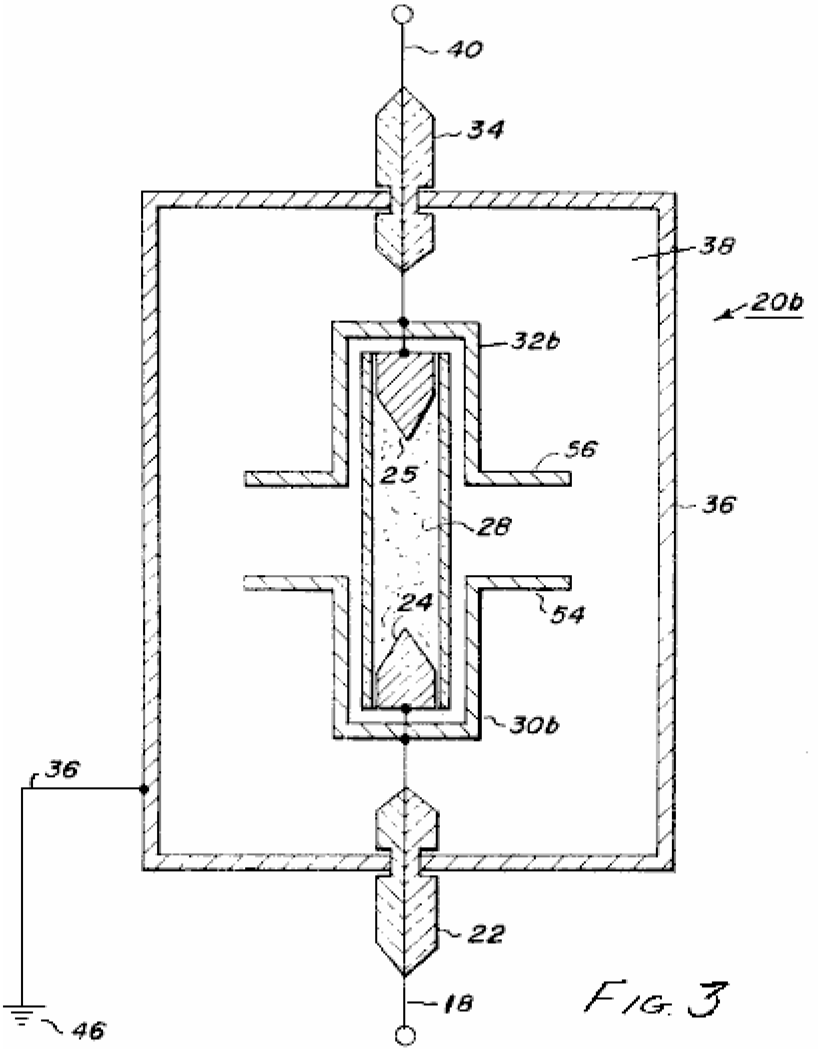

FIG. 3

In **Fig.3**, still another embodiment of an optical electrostatic generator **20b** is shown. This generator is particularly suited for use with AC circuits. In this embodiment, the capacitor plates **30b** and **32b** have flanges **54** and **56** which extend outwards towards the envelope **36**. While the utilisation of the optical electrostatic generator has been described in use in a fluorescent lighting circuit, it is to be understood that many other types of circuits may be used. For example, the high-voltage embodiment may be used in a variety of circuits such as flash lamps, high-speed controls, laser beams and high-energy pulses. The generator is also particularly usable in a circuit including electrostatic particle precipitation in air pollution control devices, chemical synthesis in electrical discharge systems such as ozone generators and charging means for high-voltage generators of the Van de Graff type, as well as particle accelerators. To those skilled in the art, many other uses and circuits will be apparent.

Patent GB 763,062 5th December 1956 Inventors: Harold Colman and Ronald Seddon-Gillespie

APPARATUS FOR PRODUCING AN ELECTRIC CURRENT

This patent shows the details of a lightweight device which can produce electricity using a self-powered electromagnet and chemical salts. The working life of the device before needing a recharge is estimated at some seventy years. The operation is controlled by a transmitter which bombards the chemical sample with 300 MHz radio waves. This produces radioactive emissions from the chemical mixture for a period of one hour maximum, so the transmitter needs to be run for fifteen to thirty seconds once every hour. The chemical mixture is shielded by a lead screen to prevent harmful radiation reaching the user. The output from the tiny device described is estimated to be some 10 amps at 100 to 110 volts DC.

DESCRIPTION

This invention relates to a new apparatus for producing electric current the apparatus being in the form of a completely novel secondary battery. The object of this invention is to provide apparatus of the above kind which is considerably lighter in weight than, and has an infinitely greater life than a known battery or similar characteristics and which can be re-activated as and when required in a minimum of time.

According to the present invention we provide apparatus comprising a generator unit which includes a magnet, a means for suspending a chemical mixture in the magnetic field, the mixture being composed of elements whose nuclei becomes unstable as a result of bombardment by short waves so that the elements become radio-active and release electrical energy, the mixture being mounted between, and in contact with, a pair of different metals such as copper and zinc, a capacitor mounted between those metals, a terminal electrically connected to each of the metals, means for conveying the waves to the mixture and a lead shield surrounding the mixture to prevent harmful radiation from the mixture.

The mixture is preferably composed of the elements Cadmium, Phosphorus and Cobalt having Atomic Weights of 112, 31 and 59 respectively. The mixture, which may be of powdered form, is mounted in a tube of non-conducting, high heat resistivity material and is compressed between granulated zinc at one end of the tube and granulated copper at the other end, the ends of the tube being closed by brass caps and the tube being carried in a suitable cradle so that it is located between the poles of the magnet. The magnet is preferably an electro-magnet and is energised by the current produced by the unit.

The means for conveying the waves to the mixture may be a pair of antennae which are exactly similar to the antennae of the transmitter unit for producing the waves, each antenna projecting from and being secured to the brass cap at each end of the tube.

The transmitter unit which is used for activating the generator unit may be of any conventional type operating on ultra-shortwave and is preferably crystal controlled at the desired frequency.

DESCRIPTION OF THE DRAWINGS

FIG.1.

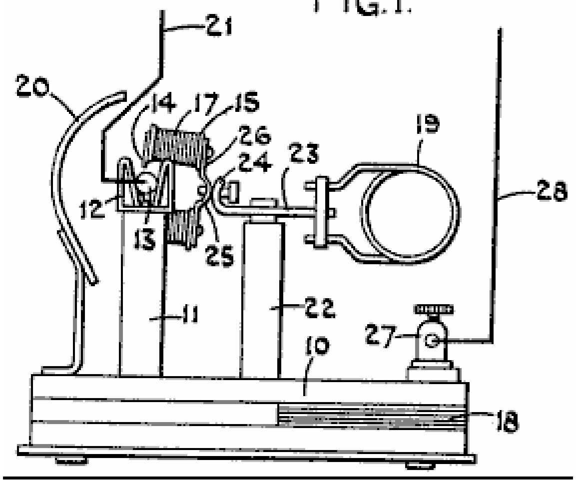

Fig.1 is a side elevation of one form of the apparatus.

FIG.2.

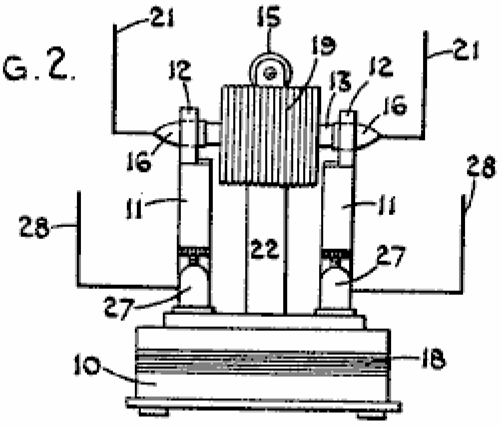

Fig.2 is a view is an end elevation

FIG.3.

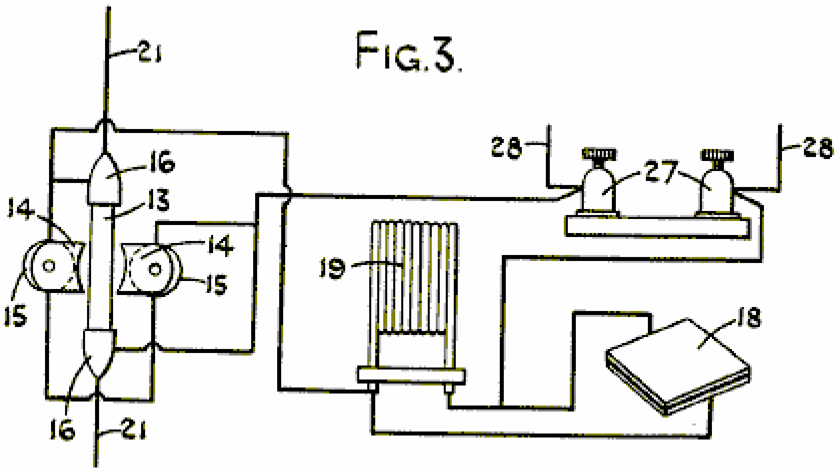

Fig.3 is a schematic circuit diagram.

In the form of our invention illustrated, the generator unit comprises a base **10** upon which the various components are mounted. This base **10**, having projecting upwards from it a pair of arms **11**, which form a cradle housing **12** for a quartz tube **13**, the cradle **12** preferably being made of spring material so that the tube **13** is firmly, yet removably held in position. The arms **11** are positioned relative to the poles **14** of an electromagnet **15** so that the tube **13** is located immediately between the poles of the magnet so as to be in the strongest magnetic field created by the electromagnet. The magnet serves to control the alpha and beta rays emitted by the cartridge when it is in operation.

The ends of the quartz tube **13** are each provided with a brass cap **16**, and these caps **16** are adapted to engage within the spring cradles **12** and the coils **17** associated with the magnet being so arranged that if the base **10** of the unit is in a horizontal plane, the poles **14** of the magnet are in a substantially vertical plane.

Also connected across the cradles is a lead capacitor **18** which may conveniently be housed in the base **10** of the unit and connected in parallel with this capacitor **18** is a suitable high frequency inductance coil **19**. The unit is provided with a lead shield **20** so as to prevent harmful radiation from the quartz tube as will be described later.

The quartz tube **13** has mounted in it, at one end, a quantity of granulated copper which is in electrical contact with the brass cap **16** at that end of the tube. Also mounted within the tube and in contact with the granulated copper is a chemical mixture which is in powdered form and which is capable of releasing electrical energy and which becomes radioactive when subjected to bombardment by ultra-short radio waves.

Mounted in the other end of the tube, and in contact with the other end of the powdered chemical mixture is a quantity of granulated zinc which is itself in contact with the brass cap on this end of the tube, the arrangement being that the chemical mixture is compressed between the granulated copper and the granulated zinc.

Projecting outwards from each brass cap **16**, and electrically connected to them, is an antenna **21**. Each antenna **21** corresponding exactly in dimension, shape and electrical characteristics to the antenna associated with a transmitter unit which is to produce the ultra shortwaves mentioned earlier.

The electromagnet **15** is conveniently carried by a centrally positioned pillar **22** which is secured to the base **10**. At the upper end of pillar **22** there is a cross-bar **23**, which has the high frequency coil **19** attached to one end of it. The other end of the cross-bar **23** is bent around into the curved shape as shown at **24** and is adapted to bear against a curved portion **25** of the base **26** of the electromagnet **15**. A suitable locking device is provided for holding the curved portions **24** and **25** in the desired angular position, so that the position of the poles **14** of the electromagnet can be adjusted about the axis of the quartz tube **13**.

The transmitter unit is of any suitable conventional type for producing ultra shortwaves and may be crystal controlled to ensure that it operates at the desired frequency with the necessity of tuning. If the transmitter is only required to operate over a short range, it may conveniently be battery powered but if it is to operate over a greater range, then it may be operated from a suitable electrical supply such as the mains. If the transmitter is to be tuned, then the tuning may be operated by a dial provided with a micrometer vernier scale so that the necessary tuning accuracy may be achieved.

The mixture which is contained within the quartz tube is composed of the elements Cadmium, Phosphorus and Cobalt, having atomic weights 112, 31 and 59 respectively. Conveniently, these elements may be present in the following compounds, and where the tube is to contain thirty milligrams of the mixture, the compounds and their proportions by weight are:

1 Part of $Co (No_3) 2 6H_2O$
2 Parts of $CdCl_2$
3 Parts of $3Ca (Po_3) 2 + 10C$.

The cartridge which consists of the tube **13** with the chemical mixture in it is preferably composed of a number of small cells built up in series. In other words, considering the cartridge from one end to the other, at one end and in contact with the brass cap, there would be a layer of powdered copper, then a layer of the chemical mixture, then a layer of powdered zinc, a layer of powdered copper, etc. with a layer of powdered zinc in contact with the brass cap at the other end of the cartridge. With a cartridge some forty five millimetres long and five millimetres diameter, some fourteen cells may be included.

The cradles **12** in which the brass caps **16** engage, may themselves form terminals from which the output of the unit may be taken. Alternatively, a pair of terminals **27** may be connected across the cradles **12**, these terminals **27** being themselves provided with suitable antennae **28**, which correspond exactly in dimensions, shape and electrical characteristics to the antennae associated with the transmitter, these antennae **28**, replacing the antennae **21**.

In operation with the quartz tube containing the above mixture located between the granulated copper and the granulated zinc and with the tube itself in position between the poles of the magnet, the transmitter is switched on and the ultra shortwaves coming from it are received by the antennae mounted at each end of the tube and in contact with the copper and zinc respectively, the waves being thus passed through the copper and zinc and through the mixture so that the mixture is bombarded by the short waves and the Cadmium, Phosphorus and Cobalt associated with the mixture become radioactive and release electrical energy which is transmitted to the granulated copper and granulated zinc, causing a current to flow between them in a similar manner to the current flow produced by a thermo couple. It has been established that with a mixture having the above composition, the optimum release of energy is obtained when the transmitter is operating at a frequency of 300 MHz.

The provision of a quartz tube is necessary for the mixture evolves a considerable amount of heat while it is reacting to the bombardment of the short waves. It is found that the tube will only last for one hour and that the tube will become discharged after an hours operation, that is to say, the radioactiveness of the tube will only last for one hour and it is therefore necessary, if the unit is to be run continuously, for the transmitter to be operated for a period of some fifteen to thirty seconds duration once every hour.

With a quartz tube having an overall length of some forty five millimetres and an inside diameter of five millimetres and containing thirty milligrams of the chemical mixture, the estimated energy which will be given off from the tube for a discharge of one hour, is 10 amps at between 100 and 110 volts. To enable the tube to give off this discharge, it is only necessary to operate the transmitter at the desired frequency for a period of some fifteen to thirty seconds duration.

The current which is given off by the tube during its discharge is in the form of direct current. During the discharge from the tube, harmful radiations are emitted in the form of gamma rays, alpha rays and beta rays and it is therefore necessary to mount the unit within a lead shield to prevent the harmful radiations from affecting personnel and objects in the vicinity of the unit. The alpha and beta rays which are emitted from the cartridge when it is in operation are controlled by the magnet.

When the unit is connected up to some apparatus which is to be powered by it, it is necessary to provide suitable fuses to guard against the cartridge being short-circuited which could cause the cartridge to explode.

The estimated weight of such a unit including the necessary shielding, per kilowatt hour output, is approximately 25% of any known standard type of accumulator which is in use today and it is estimated that the life of the chemical mixture is probably in the region of seventy to eighty years when under constant use.

It will thus be seen that we have provided a novel form of apparatus for producing an electric current, which is considerably lighter than the standard type of accumulator at present known, and which has an infinitely greater life than the standard type of accumulator, and which can be recharged or reactivated as and when desired and from a remote position depending on the power output of the transmitter. Such form of battery has many applications.

Patent US 6,208,061 27th March 2001 Inventor: Jong-Sok An

NO-LOAD GENERATOR

Electrical power is frequently generated by spinning the shaft of a generator which has some arrangement of coils and magnets contained within it. The problem is that when current is drawn from the take-off coils of a typical generator, it becomes much more difficult to spin the generator shaft. The cunning design shown in this patent overcomes this problem with a simple design in which the effort required to turn the shaft is not altered by the current drawn from the generator.

ABSTRACT

A generator of the present invention is formed of ring permanent magnet trains 2 and 2' attached and fixed on to two orbits 1 and 1' about a rotational axis 3, magnetic induction primary cores 4 and 4' attached and fixed above outer peripheral surfaces of the ring permanent magnet trains 2 and 2' at a predetermined distance from the outer peripheral surfaces, magnetic induction secondary cores 5 and 5' attached and fixed on to the magnetic induction primary cores 4 and 4' and each having two coupling, holes 6 and 6' formed therein, tertiary cores 8 and 8' inserted for coupling respectively into two coupling holes 6 and 6' of each of the associated magnetic induction secondary cores 5 and 5' opposite to each other, and responsive coils 7 and 7'. The ring permanent magnetic trains 2 and 2' are formed of 8 sets of magnets with alternating N and S poles, and magnets associated with each other in the axial direction have opposite polarities respectively and form a pair.

DESCRIPTION

TECHNICAL FIELD

The present invention relates to generators, and particularly to a load-free generator which can maximise the generator efficiency by erasing or eliminating the secondary repulsive load exerted on the rotor during electric power generation.

BACKGROUND ART

The generator is a machine which converts mechanical energy obtained from sources of various types of energy such as physical, chemical or nuclear power energy, for example, into electric energy. Generators based on linear motion have recently been developed while most generators are structured as rotational type generators. Generation of electromotive force by electromagnetic induction is a common principle to generators regardless of their size or whether the generator is AC or DC generator.

The generator requires a strong magnet such as permanent magnet and electromagnet for generating magnetic field as well as a conductor for generating the electromotive force, and the generator is structured to enable one of them to rotate relative to the other. Depending on which of the magnet and the conductor rotates, generators can be classified into rotating-field type generators in which the magnetic field rotates and rotating-armature type generators in which the conductor rotates.

Although the permanent magnet can be used for generating the magnetic field, the electromagnet is generally employed which is formed of a magnetic field coil wound around a core to allow direct current to flow through them. Even if a strong magnet is used to enhance the rotational speed, usually the electromotive force produced from one conductor is not so great. Thus, in a generally employed system, a large number of conductors are provided in the generator and the electromotive forces generated from respective conductare serially added up so as to achieve a high electric power.

As discussed above, a usual generator produces electricity by mechanically rotating a magnet (or permanent magnet) or a conductor (electromagnet, electrically responsive coil and the like) while reverse current generated at this time by magnetic induction (electromagnetic induction) and flowing through the coil causes magnetic force which pulls the rotor so that the rotor itself is subjected to unnecessary load which reaches at least twice the electric power production.

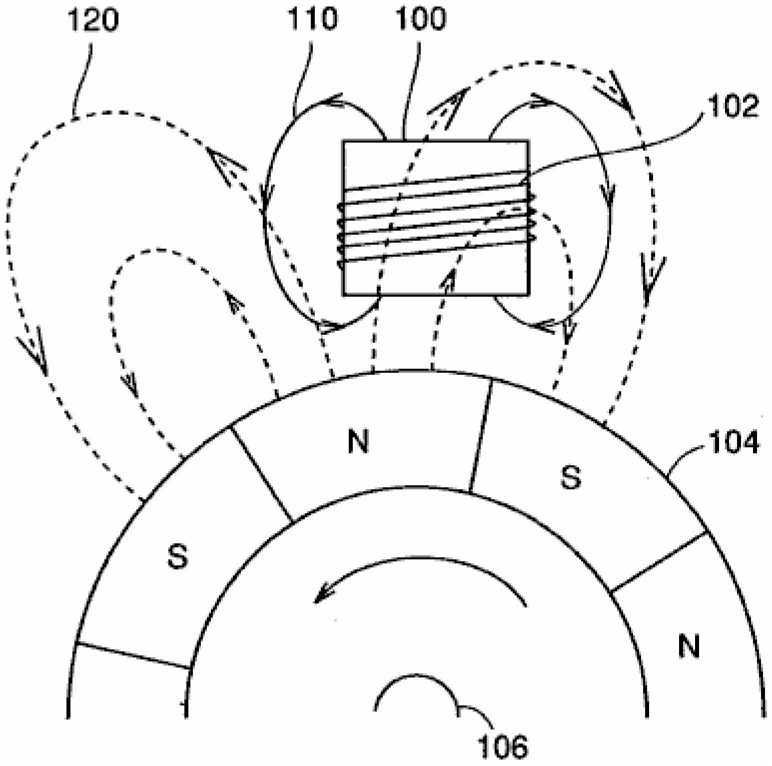

Fig.6 illustrates that the load as discussed above is exerted on a rotor in a rotating-field type generator mentioned above.

Referring to **Fig.6**, a permanent magnet train **104** is arranged about an axis of rotation **106** such that N poles and S poles are alternately located on the outer peripheral surface of the train. At a certain distance outward from the outer periphery of permanent magnet train **104**, a magnetic induction core **100** is arranged and a coil **102** is wound around magnetic induction core **100**.

As permanent magnet train **104** rotates, the magnetic field produced in the coil by permanent magnet train **104** changes to cause induced current to flow through coil **102**. This induced current allows coil **102** to generate a magnetic field **110** which causes a repulsive force exerted on permanent magnet train **104** in the direction which interferes the rotation of the magnet train.

For example, in the example shown in **Fig.6**, the S pole of magnetic field **110** faces permanent magnet train **104**. The S pole of permanent magnet train **104** approaches coil **102** because of rotation of permanent magnet train **104**, resulting in the repulsive force as described above.

If reverse current flows in a responsive coil of an armature wound around a magnetic induction core of a generator so that the resulting load hinders the rotor from rotating, reverse magnetic field of the armature responsive coil becomes stronger in proportion to the electricity output and accordingly a load corresponding to at least twice the instantaneous consumption could occur.

If electric power of 100W is used, for example, reverse magnetic field of at least 200W is generated so that an enormous amount of load affects the rotor to interfere the rotation of the rotor.

All of the conventional generators are subjected to not only a mechanical primary load, i.e. the load when the electric power is not consumed but a secondary load due to reverse current which is proportional to electric power consumption and consequently subjected to a load of at least twice the instantaneous consumption.

Such an amount of the load is a main factor of reduction of the electric power production efficiency, and solution of the problem above has been needed.

DISCLOSURE OF THE INVENTION

One object of the present invention is to provide a generator capable of generating electric power with high efficiency by cancelling out the secondary load except the mechanical load of the generator, i.e. cancelling out the load which is generated due to reverse current of a responsive coil of an armature wound around a magnetic induction core, so as to entirely prevent the secondary load from being exerted.

In short, the present invention is applied to a load-free generator including a rotational axis, a first ring magnet train, a second ring magnet train, a first plurality of first magnetic induction primary cores, a first plurality of second magnetic induction primary cores, a first responsive coil, and a second responsive coil.

The first ring magnet train has N poles and S poles successively arranged on an outer periphery of a first rotational orbit about the rotational axis. The second ring magnet train has magnets successively arranged on an outer periphery of a second rotational orbit about the rotational axis at a predetermined distance from the first rotational orbit such that the polarities of the magnets on the second rotational orbit are opposite to the polarities at opposite locations on the first rotational orbit respectively. The first plurality of first magnetic induction primary cores are fixed along a first peripheral surface of the first ring magnet train at a predetermined distance from the first peripheral surface. The first plurality of second magnetic induction primary cores are fixed along a second peripheral surface of the second ring magnet train at a predetermined distance from the second peripheral surface. A first plurality of first coupling magnetic induction cores and a first plurality of second coupling magnetic induction cores are provided in pairs to form a closed magnetic circuit between the first and second magnetic induction primary cores opposite to each other in the direction of the rotational axis. The first responsive coil is wound around the first coupling magnetic induction core. The second responsive coil is wound around the second coupling magnetic induction core, the direction of winding of the second responsive coil being reversed relative to the first responsive coil.

Preferably, in the load-free generator of the invention, the first ring magnet train includes a permanent magnet train arranged along the outer periphery of the first rotational orbit, and the second ring magnet train includes a permanent magnet train arranged along the outer periphery of the second rotational orbit.

Still preferably, the load-free generator of the present invention further includes a first plurality of first magnetic induction secondary cores provided on respective outer peripheries of the first magnetic induction primary cores and each having first and second coupling holes, and a first plurality of second magnetic induction secondary cores provided on respective outer peripheries of the second magnetic induction primary cores and each having third and fourth coupling holes. The first coupling magnetic induction cores are inserted into the first and third coupling holes to couple the first and second magnetic induction secondary cores, and the second coupling magnetic induction cores are inserted into the second and fourth coupling holes to couple the first and second magnetic induction secondary cores.

Alternatively, the load-free generator of the present invention preferably has a first plurality of first responsive coils arranged in the rotational direction about the rotational aids that are connected zigzag to each other and a first plurality of second responsive coils arranged in the rotational direction about the rotational axis that are connected zigzag to each other.

Alternatively, in the load-free generator of the present invention, preferably the first plurality is equal to 8, and the 8 first responsive coils arranged in the rotational direction about the rotational axis are connected zigzag to each other, and the 8 second responsive coils arranged in the rotational direction about the rotational axis are connected zigzag to each other.

Accordingly, a main advantage of the present invention is that two responsive coils wound respectively in opposite directions around a paired iron cores are connected to cancel reverse magnetic forces generated by reverse currents (induced currents) flowing through the two responsive coils, so that the secondary load which interferes the rotation of the rotor is totally prevented and thus a load-free generator can be provided which is subjected to just a load which is equal to or less than mechanical load when electric power production is not done, i.e. the rotational load even when the generator is operated to the maximum.

Another advantage of the present invention is that the reverse magnetic force, as found in the conventional generators, due to reverse current occurring when the rotor rotates is not generated, and accordingly load of energy except the primary gravity of the rotor and dynamic energy of the rotor is eliminated to increase the amount of electricity output relative to the conventional electric power generation system and thus enhance the electric power production and economic efficiency.

BRIEF DESCRIPTION OF THE DRAWINGS

Fig.1 is a cross sectional view of a rotating-field type generator according to an embodiment of the present invention illustrating an arrangement a permanent magnet, magnetic induction cores and coils.

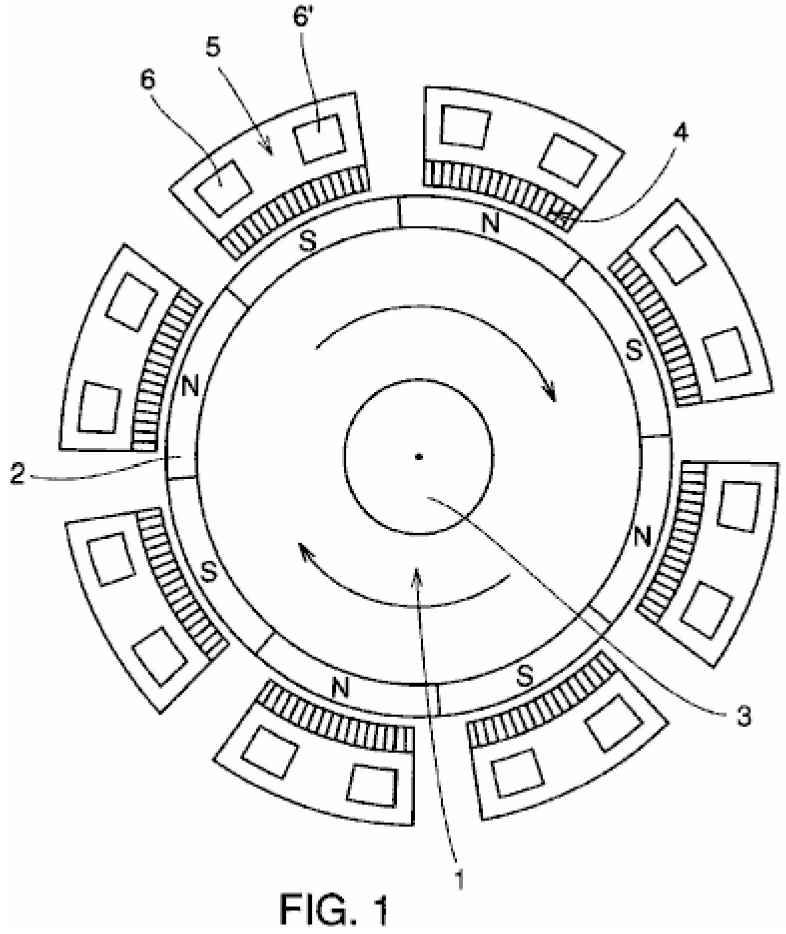

FIG. 1

Fig.2 is a partial schematic view illustrating a magnetic array of the permanent magnet rotor and an arrangement of one of magnetically responsive coils placed around that rotor in an embodiment of the present invention.

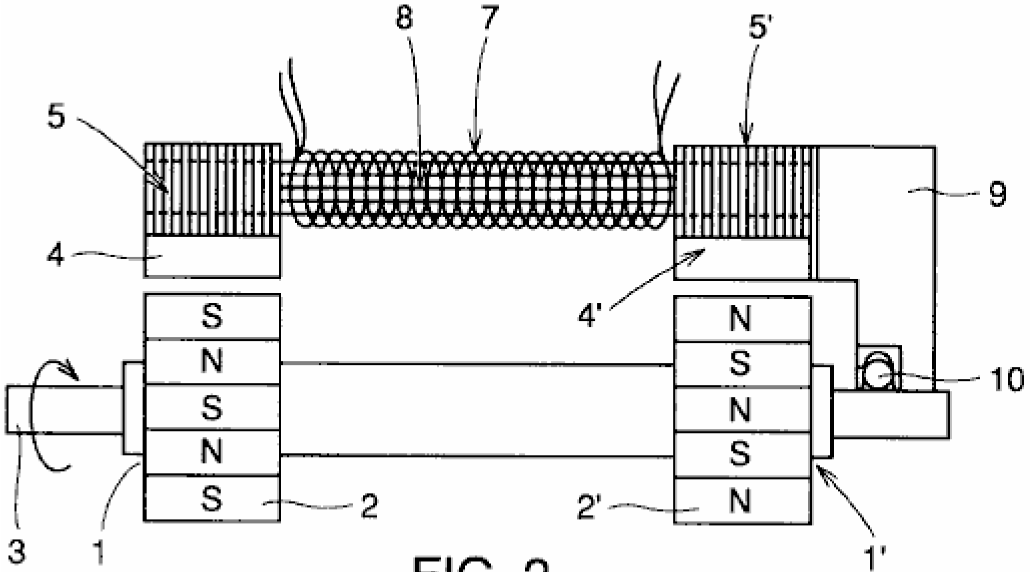

FIG. 2

Fig.3 illustrates a structure of the magnetically responsive coils and cores in the embodiment of the present invention.

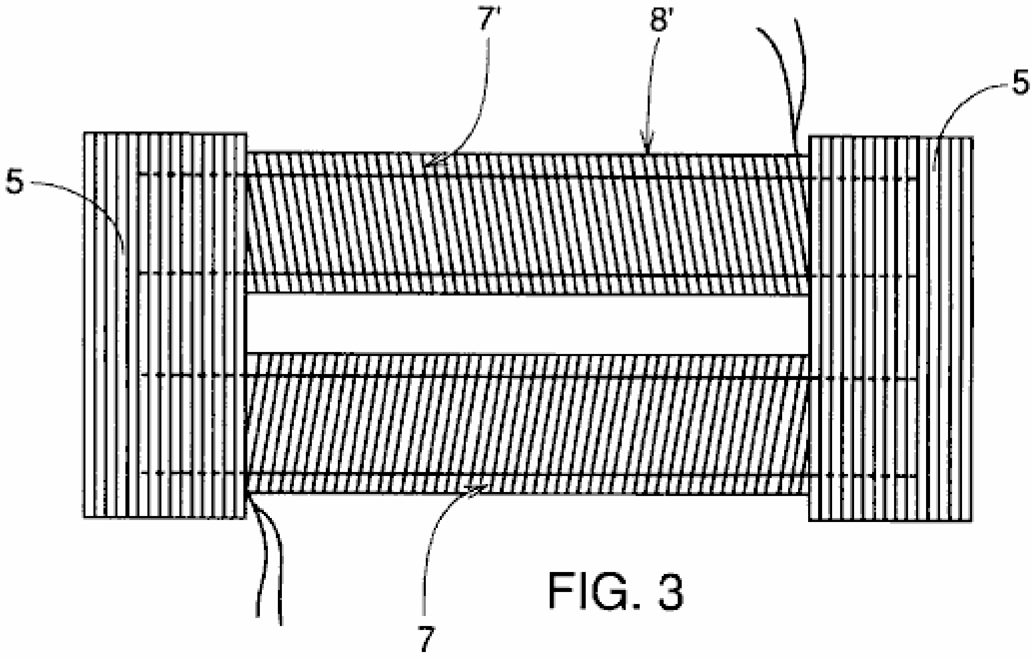

FIG. 3

Fig.4 is an enlarged plan view of magnetically sensitive cores and coil portions of the load-free generator of the present invention illustrating magnetic flow therethrough.

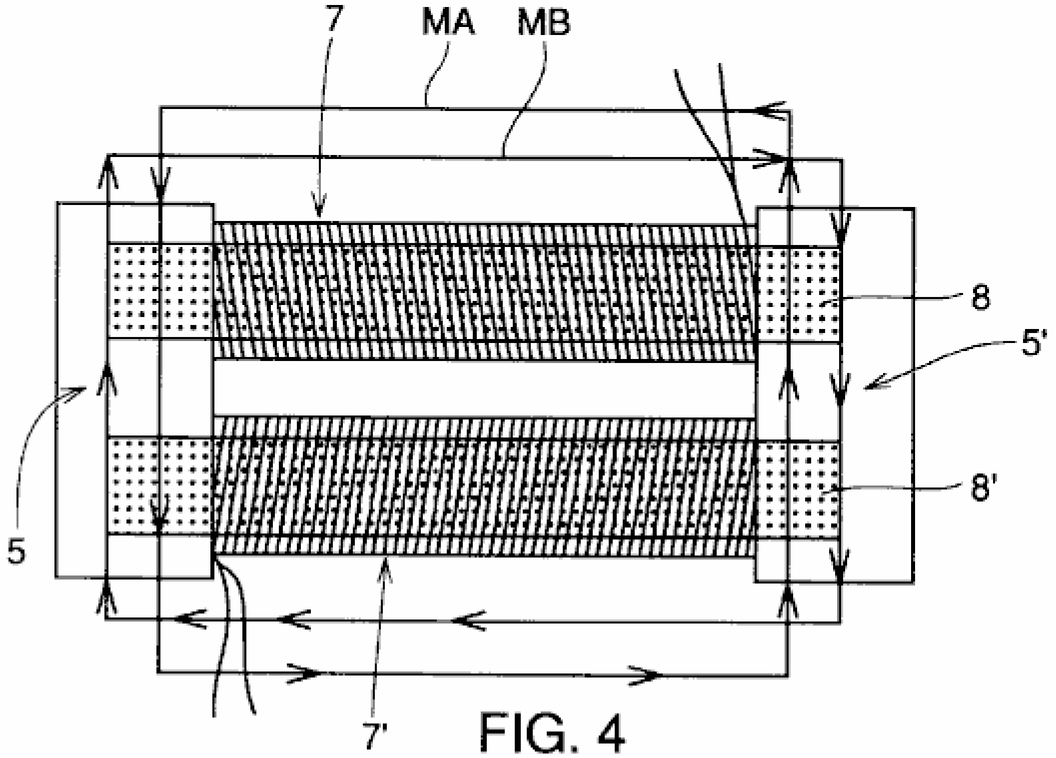

FIG. 4

Fig.5 is an exploded view about a central axis showing the interconnection of magnetic field coils which are respectively wound around tertiary cores surrounding the permanent magnet rotor in FIG. 1 according to the present invention.

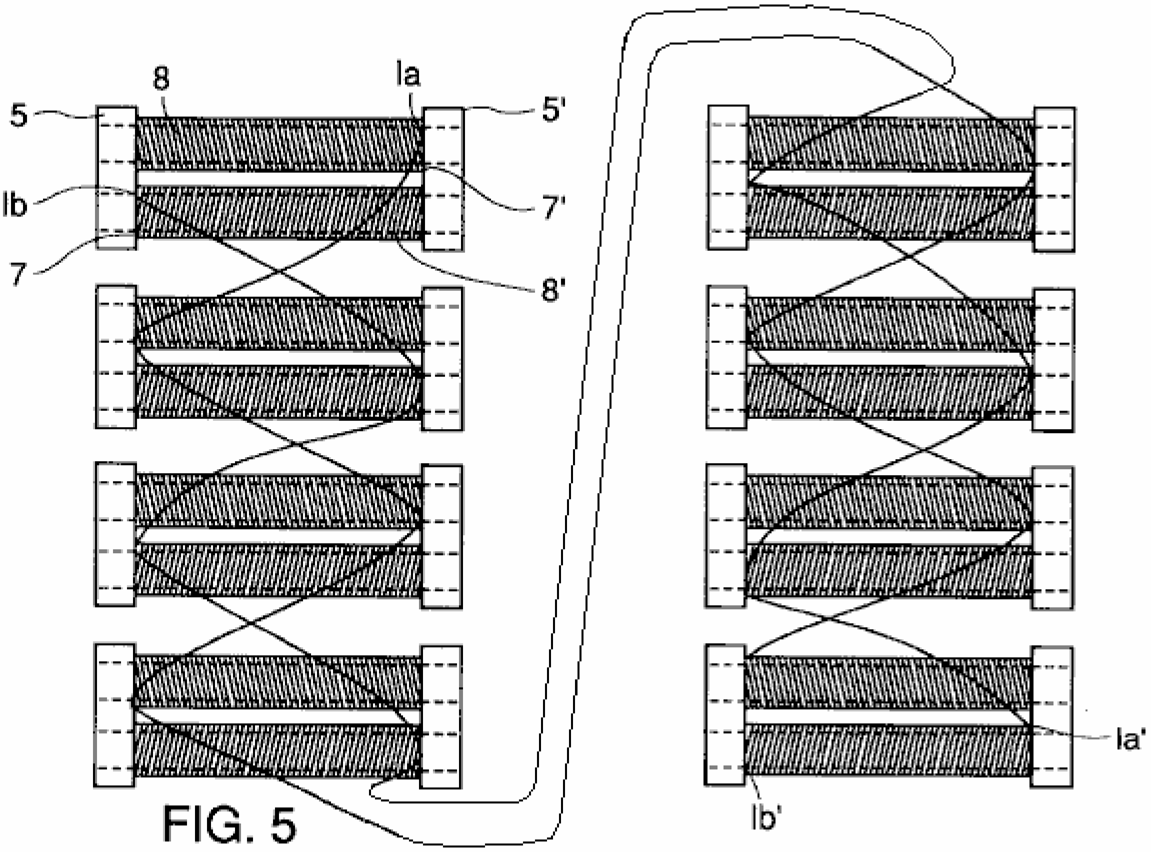

FIG. 5

Fig.6 illustrates generation of the secondary load in a conventional generator.

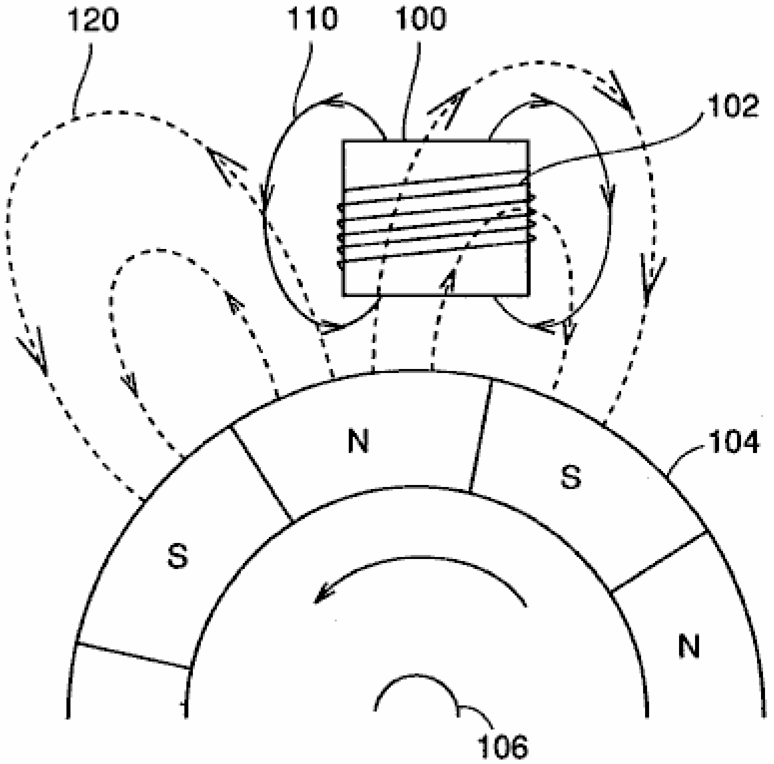

BEST MODES FOR CARRYING OUT THE INVENTION

The structure and operation of a load-free generator according to the present invention are now described in conjunction with the drawings.

Fig.1 illustrates a cross sectional structure of the load-free generator of the invention perpendicular to a rotational axis **3**.

Fig.2 partially illustrates a cross sectional structure of the load-free generator of the invention in parallel to rotational axis **3**. Specifically, in **Fig.2**, only one of eight sets of magnetic induction primary cores **4** and **4'** arranged around rotational axis **3** as described below is representatively shown.

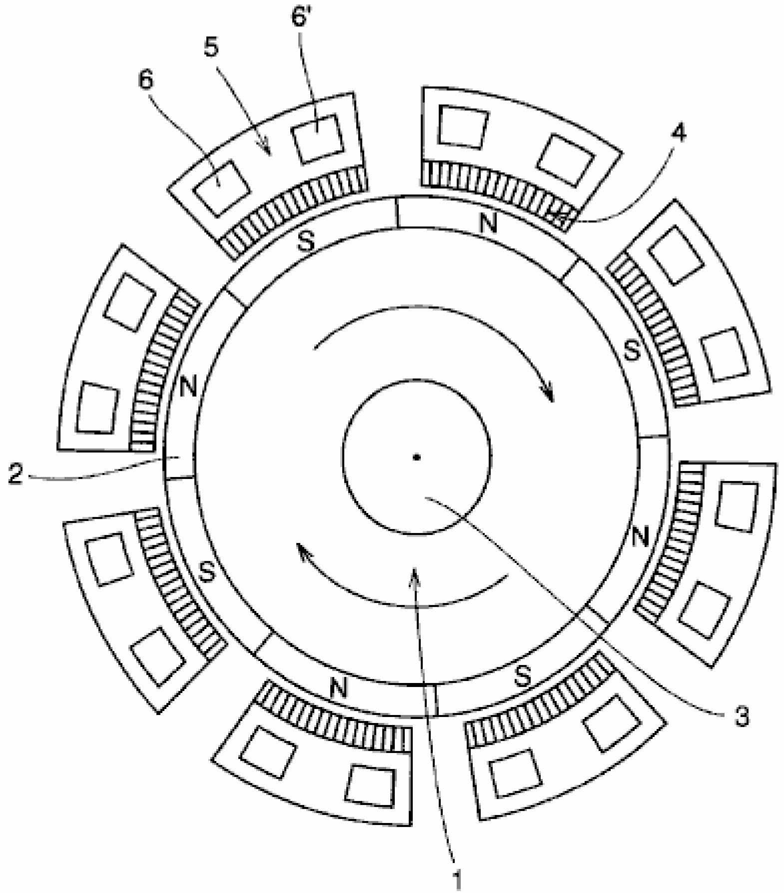

FIG. 1

Referring to **Fig.1** and **Fig.2**, the structure of the load-free generator of the invention is now described. Permanent magnet trains **2** and **2'** in ring forms are attached and fixed to respective left and right orbits **1** and **1'** provided relative to rotational axis **3** with a certain interval between them. Permanent magnet trains **2** and **2'** are fixed onto left and right orbits **1** and **1'** respectively such that the polarities on the outer peripheral surface of each magnet train relative to the rotational axis are alternately N poles and S poles. The permanent magnet trains are rotatable about the axis. Further, the facing polarities of respective permanent magnet train **2** and permanent magnet train **2'** relative to the direction of rotational axis **3** are arranged to be opposite.

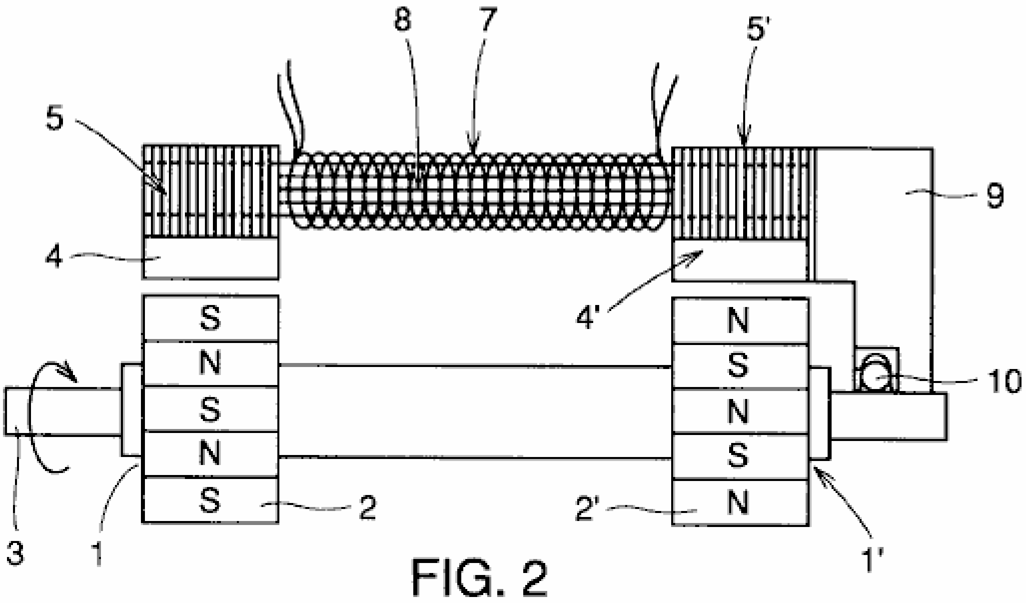

FIG. 2

As shown in **Fig.2**, rotational axis **3** and a case **9** are joined by a bearing **10** at a certain distance from the permanent magnet trains **2** and **2'**.

At a predetermined distance from permanent magnet trains **2** and **2'**, magnetic induction primary cores **4** and **4'** with respective coils wound around them are fixed to case **9**.

In addition, magnetic induction secondary cores **5** and **5'** each having two coupling holes **6** and **6'** formed therein are structured by stacking and coupling a plurality of thin cores attached and fixed to magnetic induction primary cores **4** and **4'** respectively and the secondary cores are attached and fixed to case **9**.

Magnetic induction tertiary cores **8** and **8'** are inserted respectively into coupling holes **6** and **6'** of magnetic induction secondary cores **5** and **5'** so as to couple magnetic induction secondary cores **5** and **5'** of each other.

Responsive coils **7** and **7'** are wound in opposite directions to each other around respective magnetic induction cores **8** and **8'**.

Fig.3 illustrates a structure formed of magnetic induction secondary cores **5** and **5'**, magnetic induction cores **8** and **8'** and responsive coils **7** and **7'** viewed in the direction perpendicular to rotational axis **3**.

As explained above, the directions of windings of responsive coils **7** and **7'** are respectively opposite to each other around magnetic induction cores **8** and **8'** which couple magnetic induction secondary cores **5** and **5'**.

In the structure described in conjunction with **Fig.1**, **Fig.2** and **Fig.3**, when rotational axis **3** of the generator rotates, permanent magnetic trains **2** and **2'** accordingly rotate to generate magnetically sensitive currents (electromagnetically induced current) in responsive coils **7** and **7'** and the current thus produced can be drawn out for use.

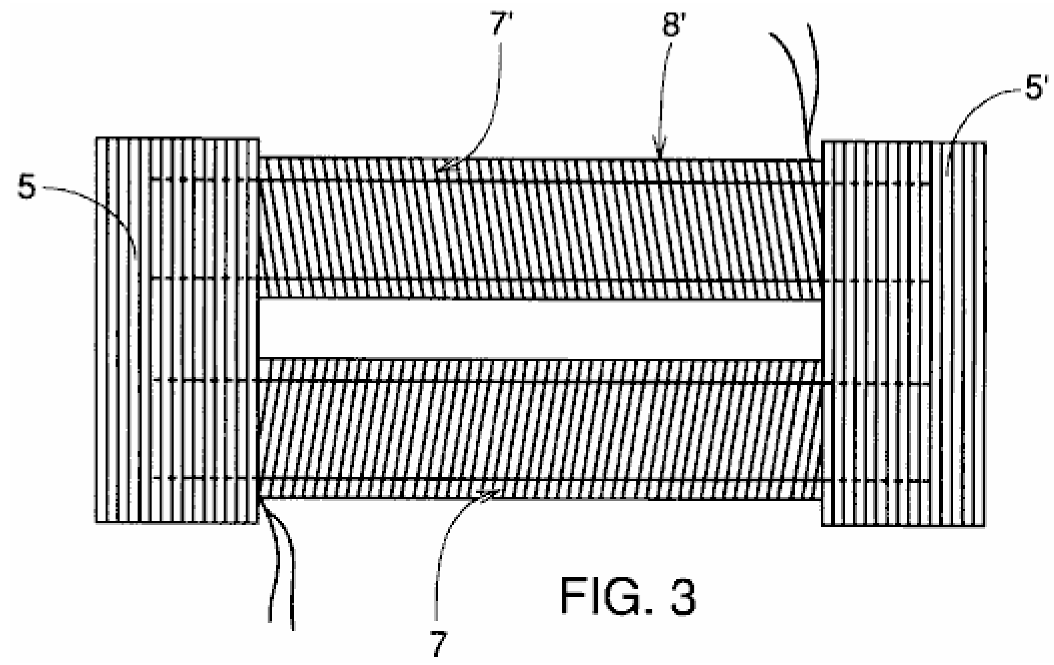

FIG. 3

As shown in **Fig.3**, the coils are wound about magnetic induction cores **8** and **8'** respectively in the opposite directions in the generator of the present invention, and the directions of the magnetic fields generated by the flow of the induced currents are arranged such that the N pole and S pole alternately occurs around rotational axis **3**.

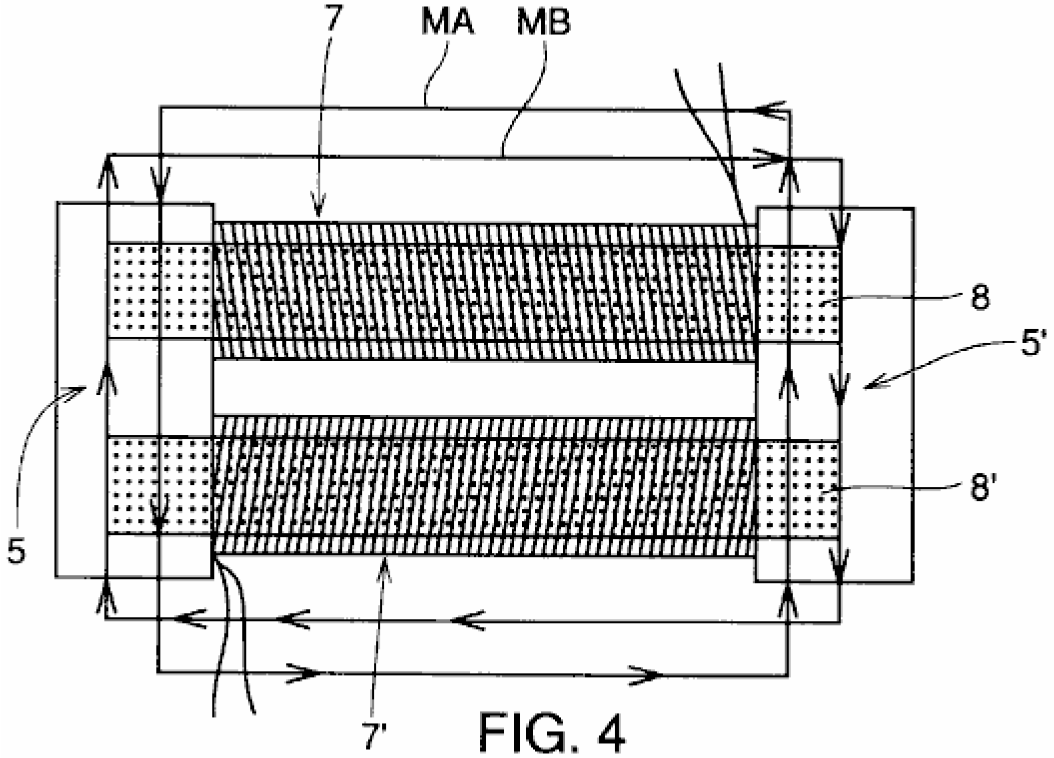

FIG. 4

Fig.4 illustrates magnetic fields induced in a set of magnetic induction secondary cores **5** and **5'**, magnetic induction cores **8** and **8'** and responsive coils **7** and **7'**.

At iron strips on both ends of respective magnetic induction secondary cores **5** and **5'**, a reverse current magnetic field is generated by responsive coil **7** upon the rotation of N and S poles of permanent magnet trains **2** and **2'** is in the direction of **MA** shown in **Fig.4**, for example, while a reverse current magnetic field generated by responsive coil **7** is in the direction of **MB** in **Fig.4**. Consequently, the reverse magnetic fields generated by the flow of currents cancel each other. The cores are formed of a plurality of iron strips in order to eliminate heat generated by eddy currents.

The magnetic field of the rotor thus has no dependence on the flow of currents, the load caused by the induced magnetisation phenomenon disappears, and energy of movement necessary for rotation against the mechanical primary load of the rotor itself is applied to the rotor.

At this time, a magnetic circuit including magnetic induction secondary cores **5** and **5'** and magnetic induction tertiary cores **8** and **8'** should be shaped into ".quadrature." form. If the circuit does not structured as ".quadrature." form, a part of the reverse magnetic field functions as electrical force which hinders the rotational force of the rotor.

Further, permanent magnet trains **2** and **2'** of the rotor are arranged to have opposite poles to each other on the left and right sides as shown in **Fig.2** so as to constitute the flow of magnetic flux. Each rotor has alternately arranged magnets, for example, eight poles are provided to enhance the generator efficiency.

More detailed description of the operational principle is given now. When the rotor in **Fig.1** rotates once, S and N poles of permanent magnets **2** and **2'** attached to the periphery of the rotor successively supply magnetic fields to induction primary cores **4** above, and magnetic field is accordingly generated in a path from one orbit of the rotor along induction primary core **4**, induction secondary core **5**, induction tertiary core **8**, induction secondary core **5'**, induction primary core **4'** to the other orbit of the rotor as shown in **Fig.2**.

Accordingly, current flows in the coils affected by this electric field to generate electric power. For example, if the generated power is used as generated output for switching on an electric light or for using it as motive energy, the current flowing through the coils generates the reverse magnetic fields. However, this reverse magnetic fields do not influence permanent magnets **2** and **2'** attached to the rotor in **Fig.2** since the reverse magnetic fields of the same magnitude respectively of S and N or N and S on both ends of magnetic induction secondary cores **5** and **5'** cancel out each other as shown in **Fig.4**. Because of this, the rotor is in a no-load state in which any resistance except the weight of the rotor itself and dynamic resistance is not exerted on the rotor.

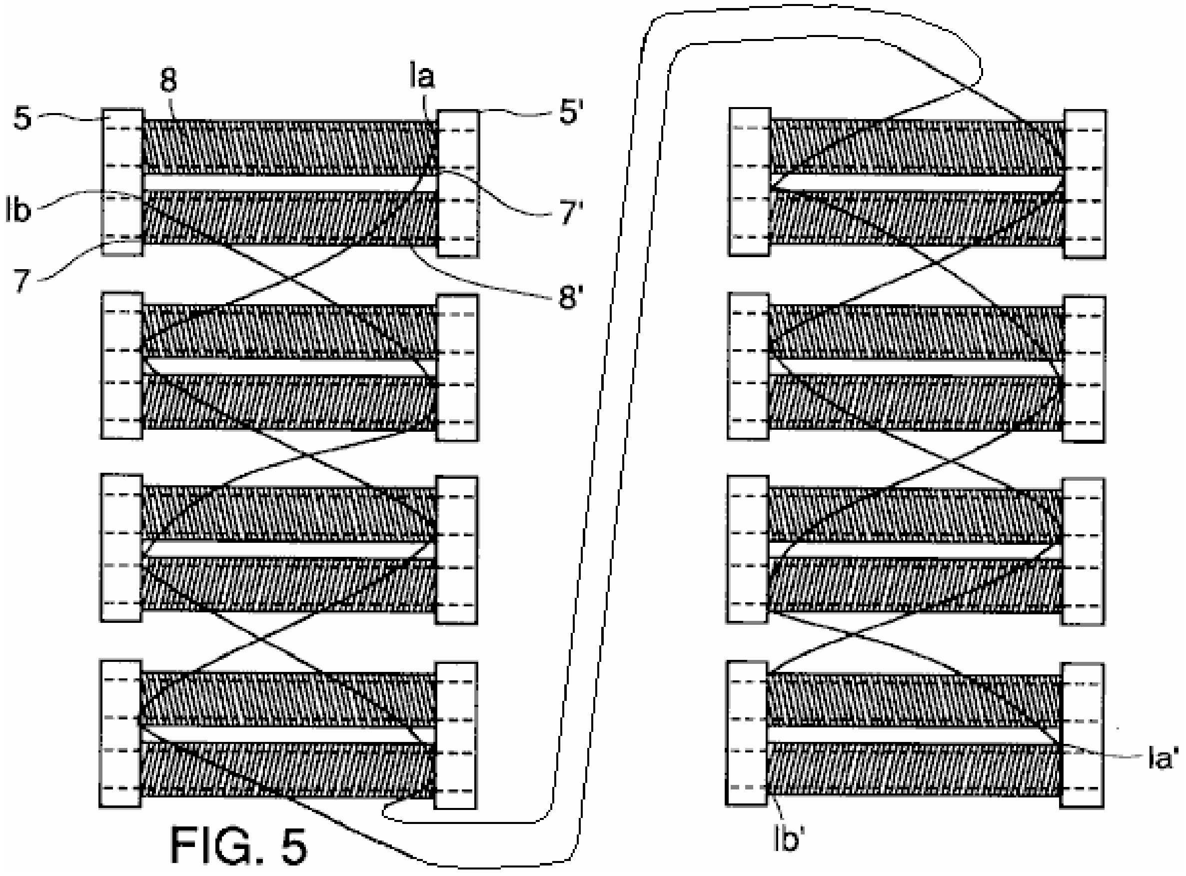

FIG. 5

Fig.5 illustrates a manner of connecting magnetically responsive coils **7** and **7'** wound around magnetic induction tertiary cores **8** and **8'** with eight poles.

Referring to **Fig.5**, according to a method of connecting magnetically responsive coils **7** and **7'** , line **1a1** of responsive coil **7'** (one drawn-out line of the wire coiled around a first magnetic induction core **8**) is connected to line **1a2'** (one drawn-out line of the wire coiled around a second magnetic induction core **8**), and then line **1a2** (the other drawn-out line of the wire coiled around a second magnetic induction core **8**) is connected to line **1a3'**, and subsequently lines **1a** and **1a'** are connected successively in zigzag manner to allow current to flow. Further, responsive coil **7** is arranged to connect lines represented by **1b1** in zigzag manner such that lines **1b** and **1b'** are successively connected. In this way, lines **1b**, **1b'** and lines **1a** and **1a'** of respective magnetically responsive coils **7** and **7'** are connected. As a whole, total four electric wires are drawn out for use.

When electric power is to be generated according to the present invention as described above, specifically, a closed circuit is formed by responsive coils **7** and **7'**, electric currents are induced in responsive coils **7** and **7'** wound around the magnetic induction cores of the generator, and the induced magnetic fields produced respectively by responsive coils **7** and **7'** could cause a great load which interferes the rotational force of the rotor. However, as shown in **Fig.4**, the direction of convolution of one coil **7** is opposite to that of the other coil **7'** so that the magnetic force generated by the reverse currents (induced currents) in responsive coils **7** and **7'** wound around magnetic induction core **4** is not transmitted to magnetic induction cores **8** and **8** accordingly no reverse magnetic force is transmitted to permanent magnets **2** and **2'**.

Therefore, each time the N poles and S poles alternate with each other because of the alternation of permanent magnets **2** and **2'** shown in **Fig.2**, the reverse magnetic forces in the right and left direction opposite to the direction of arrows denoted by **MA** and **MB** completely disappear as shown in **Fig.4**. Consequently, the reverse magnetic forces caused by the reverse currents are not influenced by permanent magnets **2** and **2'** and accordingly no load except the mechanical primary load is exerted on the generator of the invention.

As discussed above, the load-free generator of the present invention, secondary load except mechanical load of the generator, i.e. the load caused by the reverse currents flowing through the responsive coils can be nulled. With regard to this load-free generator, even if 100% of the current generated by magnetic induction (electromagnetic induction) is used, the magnetic secondary load due to the reverse currents except the mechanical primary load does not serve as load.

Although the number of poles of the rotor is described as **8** in the above description, the present invention is not limited to such a structure, and the invention can exhibit its effect when the smaller or greater number of poles is applied.

Further, although the magnet of the rotor is described as the permanent magnet in the above structure, the invention is not limited to such a case and the magnet of the rotor may be an electromagnet, for example.

In addition, although the description above is applied to the structure of the rotating-field type generator, the generator may be of the rotating-armature type.

EXPERIMENTAL EXAMPLE

More detailed description of the generator of the present invention is hereinafter given based on specific experimental examples of the invention.

The generator of the present invention and a conventional generator were used to measure the electric power production efficiency and the amount of load and compare the resultant measurements.

EXPERIMENTAL EXAMPLE 1

A 12-pole alternating current (AC) generator for battery charging was used, and the electricity output and the load when 50% of the electricity output was used as well as those when 100% of the electricity output was used were measured. The generator above is a single-phase AC motor and the employed power source was 220V, with 1750 rpm and the efficiency of 60%. The result of measurement using power of a motor of 0.5HP and ampere .times.volt gauge is shown in **Table 1**.

EXPERIMENTAL EXAMPLE 2

Measurement was done under the same conditions as those of experimental example 1 and a generator used was the one which was made according to the present invention to have the same conditions as those of the product of the existing model above. The result of measurement using ampere x volt gauge is shown in **Table 1**.

Table 1

	50% Electricity Used		100% Electricity Used	
Type of Generator	Electricity Output (Watts)	Amount of Load (Watts)	Electricity Output (Watts)	Amount of Load (Watts)
Conventional:	100	221	14	347
This invention:	100	220	183	200

(electricity output and load amount of the alternating current generators when 50% and 100% of the electricity were used)

From the result of Experimental Example 1 above, the reason for the remarkable reduction of the electricity output when the electricity consumption was 100% relative to the electricity consumption of 50% in the conventional generator is considered to be the significant increase of the repulsive load exerted on the generator when 100% of the electricity is used.

On the other hand, in the generator of the present invention, there was no appreciable difference in the amount of load between those cases in which 50% of the electricity was used and 100% thereof was used respectively. Rather, the amount of load slightly decreased (approximately 20W) when 100% of the electricity was used. In view of this, it can be understood that the amount of generated electric power of the generator of the present invention is approximately doubled as the electricity consumption increases, which is different from the conventional generator producing electric power which sharply decreases when the electricity consumption increases.

In conclusion, the amount of load above is supposed to be numerical value relative to the mechanical load of the generator as described above. Any secondary load except this, i.e. load due to the reverse currents generated in the armature responsive coils can be confirmed as zero.

EXPERIMENTAL EXAMPLE 3

12V direct current (DC) generators having similar conditions to those in experimental example 1 were used to make measurement under the same conditions (efficiency 80%). The result of the measurement is presented below.

Table 2

	50% Electricity Used		100% Electricity Used	
Type of Generator	Electricity Output (Watts)	Amount of Load (Watts)	Electricity Output (Watts)	Amount of Load (Watts)
Conventional:	103	290	21	298
This invention:	107	282	236	272

(electricity output and load amount of the alternating current generators when 50% and 100% of the electricity were used)

The DC generator has higher efficiency (80%) than that of the AC generator, while use of the brush increases the cost of the DC generator. When 100% of the electricity was used, the amount of load slightly decreased which was similar to the result shown in Table 1 and the electricity output was approximately at least 2.2 times that when 50% of the electricity was used.

EXPERIMENTAL EXAMPLE 4

A 220V single-phase alternating current (AC) generator (0.5HP) having similar conditions to those in experimental example 1 was used, and the rotation per minute (rpm) was changed to make measurement under the condition of 100% consumption of the generated electricity. The result of measurement is illustrated in the following **Table 3**.

Table 3

1750 rpm		3600 rpm		5100 rpm	
Electricity Output (Watts)	Amount of Load (Watts)	Electricity Output (Watts)	Amount of Load (Watts)	Electricity Output (Watts)	Amount of Load (Watts)
130	160	210	228	307	342

(amounts of generated electric power and load when the rotation per minute of the generator of the present invention was varied)

As shown in **Table 3** above, as the rotation per minute (rpm) increases as from 1750, 3600 to 5100, the amount of electric power increases respectively from 130, 210 to 307W and consequently the difference between the amount of generated electric power and the amount of load decreases to cause relative decrease of the amount of load as the rotation per minute (rpm) increases.

EXPERIMENTAL EXAMPLE 5

Measurement was done by changing the number of N and S poles of the permanent magnets of the invention under the same conditions as those of experimental example 1 and under the condition that 100% of the generated electricity was used.

The result of the measurement is illustrated below.

Table 4

2 poles		4 poles		8 poles	
Electricity Output (Watts)	Amount of Load (Watts)	Electricity Output (Watts)	Amount of Load (Watts)	Electricity Output (Watts)	Amount of Load (Watts)
80	152	130	200	265	296

(amounts of generated electric power and load when the number of poles of the permanent magnets of the generator of the invention was changed)

From **Table 4** above, it can be understood that as the number of poles increases, both of the amounts of generated electric power and load increase. However, the ratio of the amount of generated electric power to the amount of load monotonously increases. In the table above, in terms of the amount of load, only the mechanical primary load is exerted and electrical secondary is not exerted.

The increase of the number of poles causes increase, by the number of increased poles, in the number of lines of magnetic flux which coils traverse, and accordingly the electromotive force increases to increase the amount of generated electric power. On the other hand, the amount of mechanical load has a constant value regardless of the increase of the number of poles, so that the mechanical load amount relatively decreases to reduce the difference between the amount of load and the amount of generated electric power.

Detailed description of the present invention which has been given above is just for the purpose of presenting example and illustration, not for limitation. It will dearly be appreciated that the spirit and scope of the invention will be limited only by the attached scope of claims.

ALBERTO MOLINA-MARTINEZ: ELECTRICAL GENERATOR

Patent Application US 20020125774   6th March 2002   Inventor: Alberto Molina-Martinez

CONTINUOUS ELECTRICAL GENERATOR

This patent application shows the details of a device which it is claimed, can produce sufficient electricity to power both itself and external loads. It also has no moving parts.

ABSTRACT

A stationary cylindrical electromagnetic core, made of one piece thin laminations stacked to desired height, having closed slots radially distributed, where two three-phase winding arrangements are placed together in the same slots, one to the centre, one to the exterior, for the purpose of creating a rotational electromagnetic field by temporarily applying a three-phase current to one of the windings, and by this means, inducting a voltage on the second one, in such a way that the outgoing energy is a lot greater than the input. A return will feedback the system and the temporary source is then disconnected. The generator will run by itself indefinitely, permanently generating a great excess of energy.

BACKGROUND OF THE INVENTION

1. Field of the Invention

The present invention relates generally to electrical power generating systems. More specifically, the present invention relates to self-feeding electrical power generating units.

2. Description of Related Art

Since Nikola Tesla invented and patented his Polyphase System for Generators, Induction Motors and Transformers, no essential improvement has been made in the field. The generators would produce the polyphase voltages and currents by means of mechanical rotational movement in order to force a magnetic field to rotate across the generator's radially spaced windings. The basis of the induction motor system was to create an electro-magnetically rotating field, instead of a mechanically rotated magnetic field, which would induce voltages and currents to generate electromotive forces usable as mechanical energy or power. Finally, the transformers would manipulate the voltages and currents to make them feasible for their use and transmission for long distances.

In all present Electric Generators a small amount of energy, normally less than one percent of the outgoing power in big generators, is used to excite the mechanically rotated electromagnetic poles that will induce voltages and currents in conductors having a relative speed or movement between them and the polar masses.

The rest of the energy used in the process of obtaining electricity, is needed to move the masses and to overcome the losses of the system: mechanical losses; friction losses; brushes losses, windage losses; armature reaction losses; air gap losses; synchronous reactance losses; eddy current losses; hysteresis losses, all of which, in conjunction, are responsible for the excess in power input (mechanical power) required to generate always smaller amounts of electric power.

SUMMARY OF THE INVENTION

The **C**ontinuous **E**lectrical **G**enerator consists of a stationary cylindrical electromagnetic core made of one piece thin laminations stacked together to form a cylinder, where two three-phase windings arrangements are placed in the same slots not having any physical relative speed or displacement between them. When one of the windings is connected to a temporary three-phase source, an electromagnetic rotating field is created, and the field this way created will cut the stationary coils of the second winding, inducting voltages and currents. In the same way and extent as in common generators, about one percent or less of the outgoing power will be needed to keep the rotational magnetic field excited.

In the **C**ontinuous **E**lectrical **G**enerator there are no mechanical losses; friction losses; brush losses; windage losses; armature reaction losses; or air gap losses, because there is not any movement of any kind. There are: synchronous reactance losses, eddy current losses and hysteresis losses, which are inherent to the design, construction and the materials of the generator, but in the same extent as in common generators.

One percent or less of the total energy produced by present electric generators goes to create their own magnetic field; a mechanical energy that exceeds the total output of present generators is used to make them rotate in the process of extracting electrical currents from them. In the **C**ontinuous **E**lectrical **G**enerator there is no need for movement since the field is in fact already rotating electro-magnetically, so all that mechanical energy will not be needed. Under similar conditions of exciting currents, core mass and windings design, the **C**ontinuous **E**lectrical **G**enerator is significantly more efficient than present generators, which also means that it can produce significantly more than the energy it needs to operate. The **C**ontinuous **E**lectrical **G**enerator can feedback the system, the temporary source may be disconnected and the Generator will run indefinitely.

As with any other generator, the **C**ontinuous **E**lectrical **G**enerator may excite its own electromagnetic field with a minimum part of the electrical energy produced. The **C**ontinuous **E**lectrical **G**enerator only needs to be started up by connecting its inducting three-phase windings to a three-phase external source for an instant, and then to be disconnected, to start the system as described herein. Then, disconnected, it will run indefinitely generating a great excess of electric power to the extent of its design.

The **C**ontinuous **E**lectrical **G**enerator can be designed and calculated with all mathematical formulas in use today to design and calculate electrical generators and motors. It complies with all of the laws and parameters used to calculate electrical induction and generation of electricity today.

Except for the Law of Conservation of Energy, which, by itself, is not a mathematical equation but a theoretical concept and by the same reason does not have any role in the mathematical calculation of an electrical generator of any type, the **C**ontinuous **E**lectrical **G**enerator complies with all the Laws of Physics and Electrical Engineering. The **C**ontinuous **E**lectrical **G**enerator obligates us to review the Law of Conservation of Energy. In my personal belief, the electricity has never come from the mechanical energy that we put into a machine to move the masses against all oppositions. The mechanical system is actually providing the path for the condensation of electricity. The **C**ontinuous **E**lectrical **G**enerator provides a more efficient path for the electricity.

DESCRIPTION OF DRAWINGS

Fig.1 shows one embodiment of the present invention.

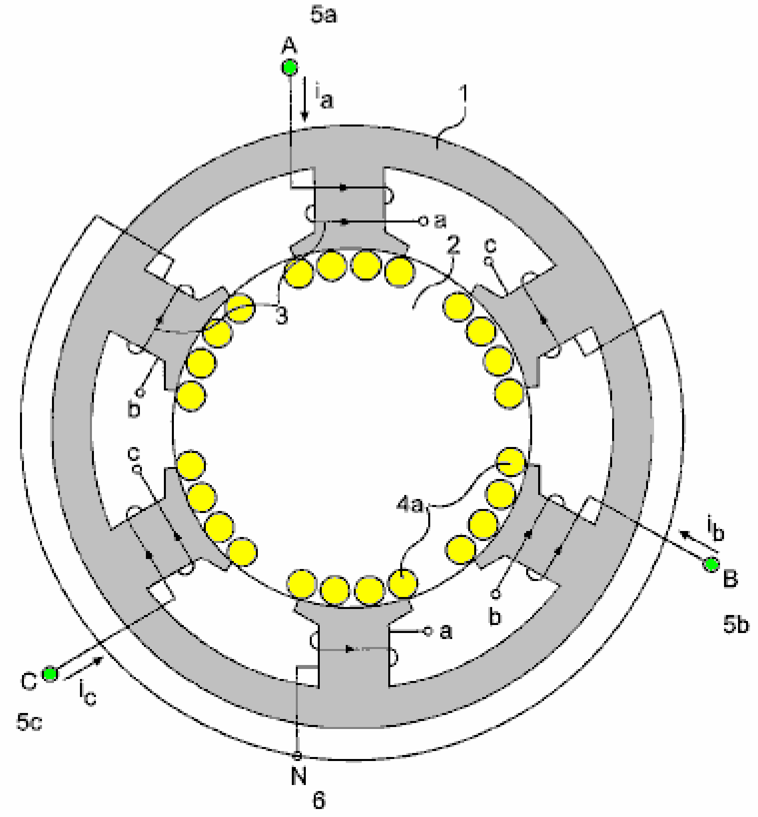

FIG. 1

Fig.2 shows an internal wiring diagram for the embodiment of the present invention shown in **Fig.1**.

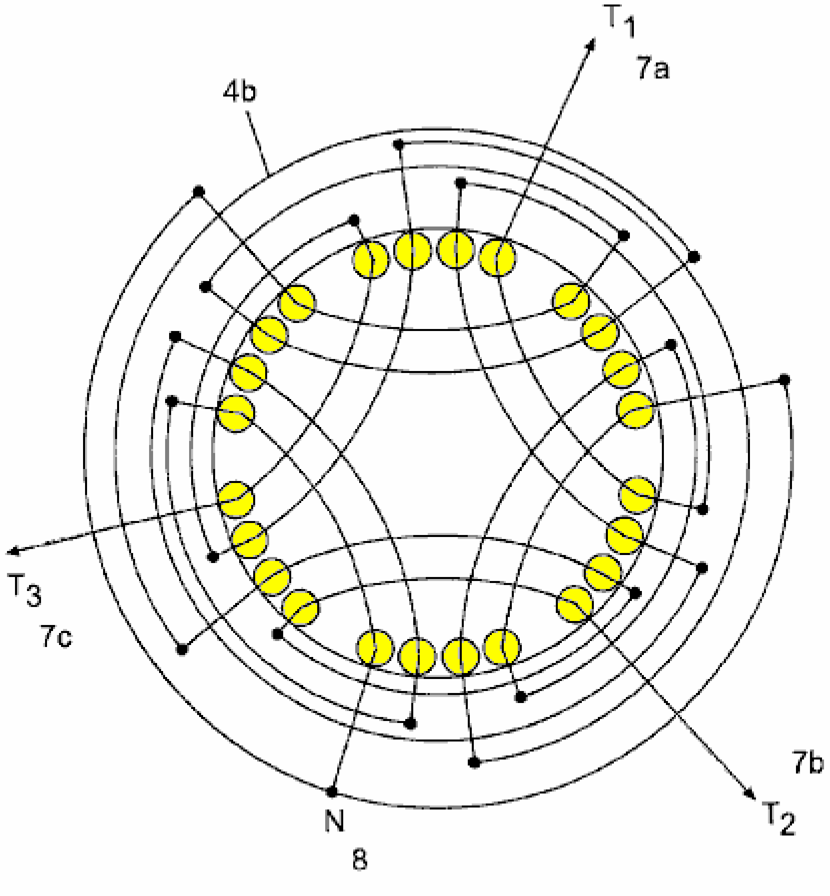

FIG. 2

Fig.3 shows a single laminate for an alternate embodiment of the present invention.

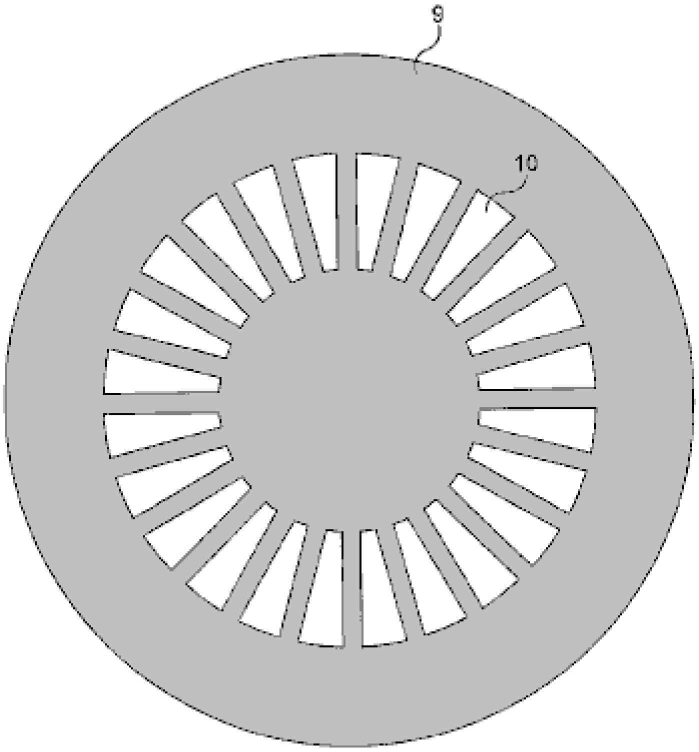

FIG. 3

Fig.4 shows a two-piece single laminate for another alternate embodiment of the present invention.

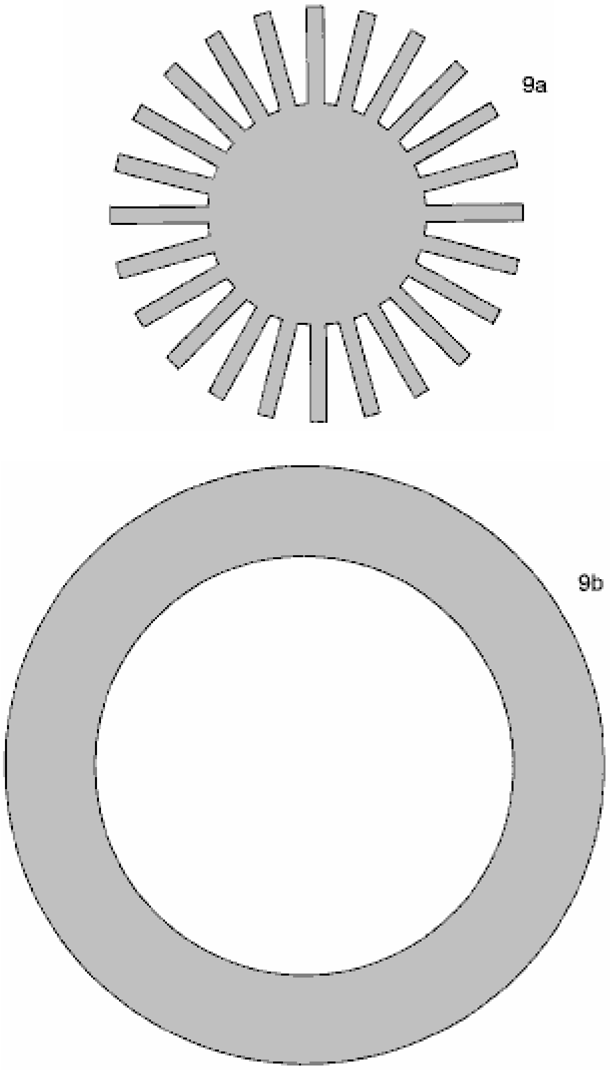

FIG. 4

Fig.5 shows a wiring diagram for an embodiment of the present invention constructed from the laminate shown in **Fig.3** or **Fig.4**.

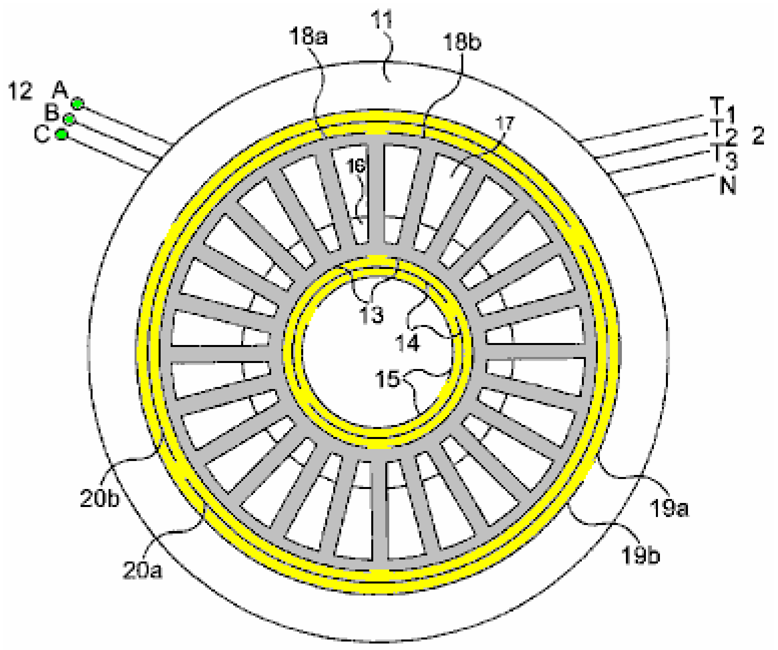

FIG. 5

Fig.6 shows the magnetic flux pattern produced by the present invention.

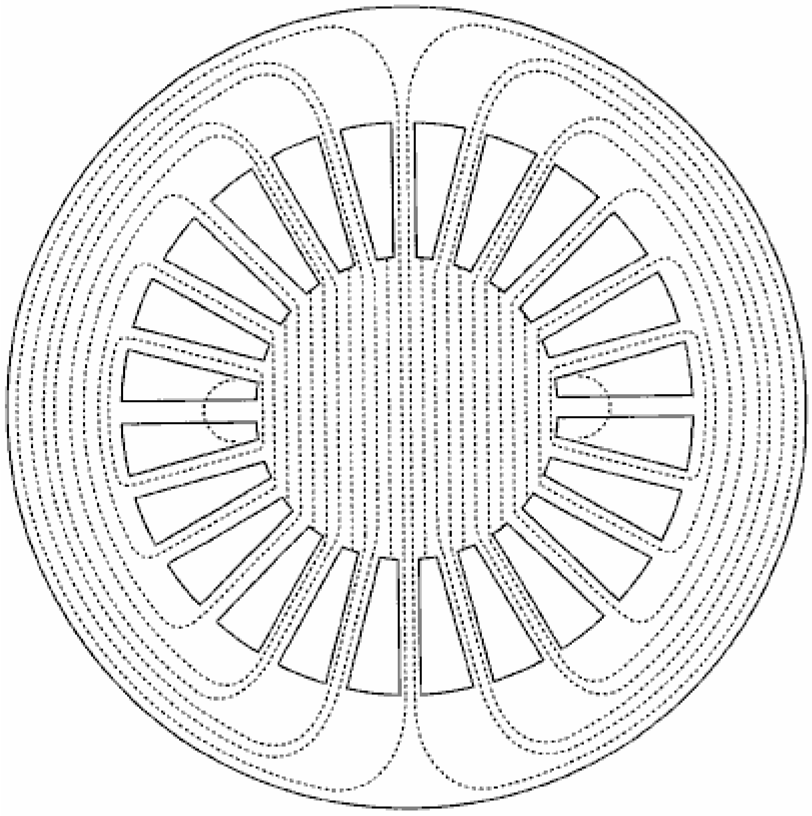

FIG. 6

Fig.7 shows the rotational magnetic field patterns produced by the present invention.

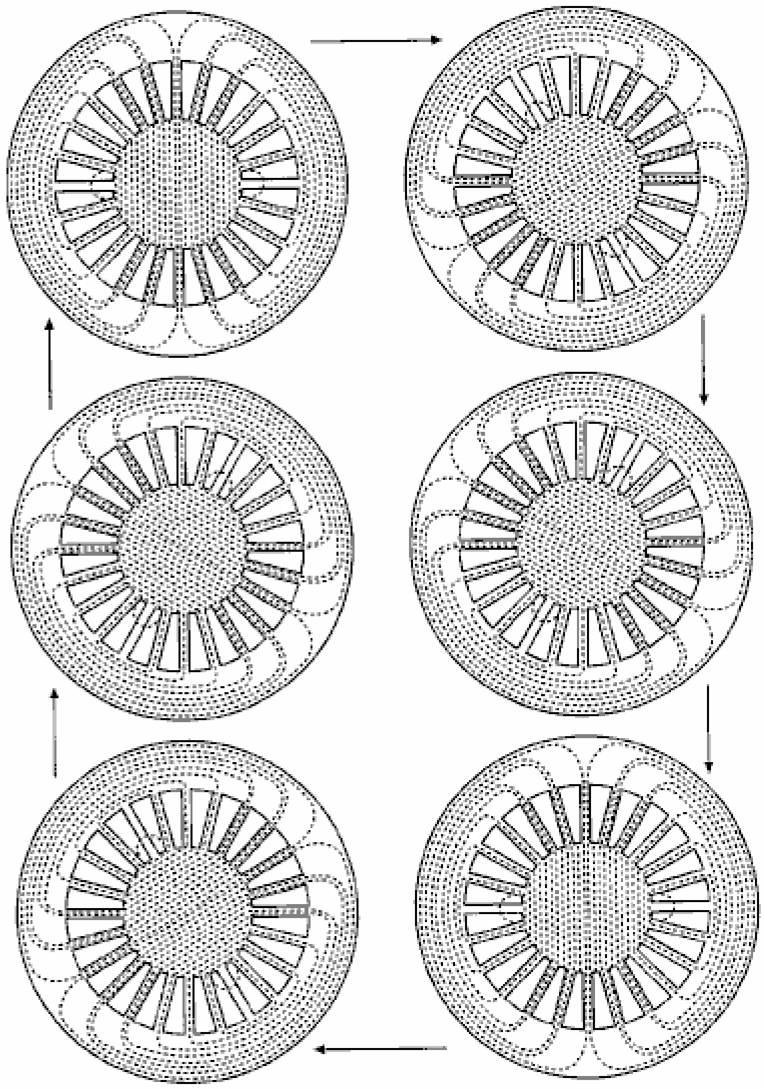

FIG. 7

Fig.8 shows the complete system of the present invention.

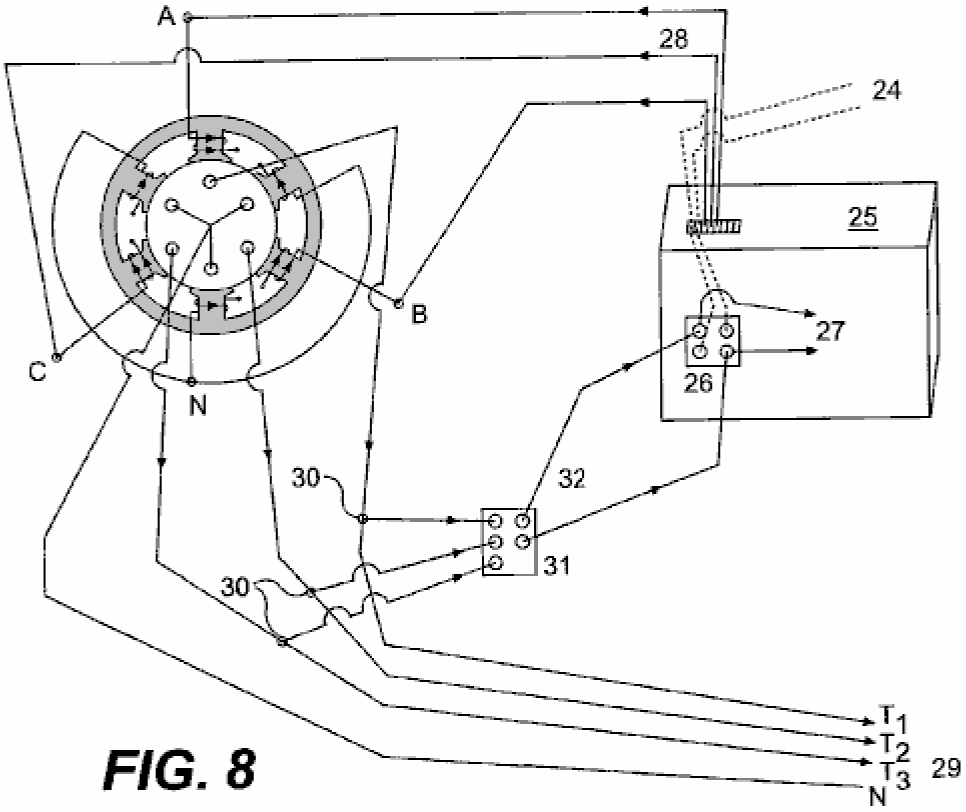

FIG. 8

Fig.9 is an expanded view of the alternate embodiment of the present invention shown in **Fig.3** or **Fig.4**.

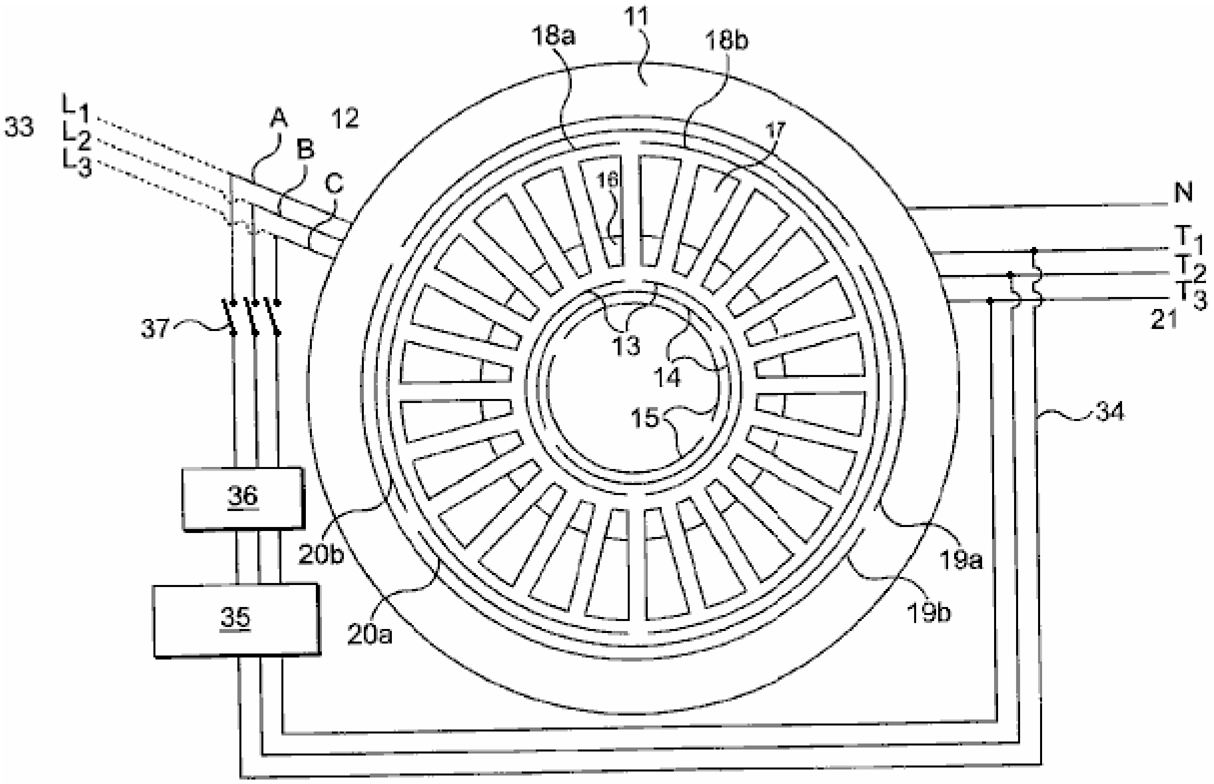

FIG. 9

DETAILED DESCRIPTION OF THE INVENTION

The present invention is a Continuous and Autonomous Electrical Generator, capable of producing more energy than it needs to operate, and which provides itself the energy needed to operate. The basic idea consists in the induction of electric voltages and currents without any physical movement by the use of a rotational magnetic field created by a three-phase stator connected temporarily to a three-phase source, and placing stationary conductors on the path of said rotational magnetic field, eliminating the need of mechanical forces.

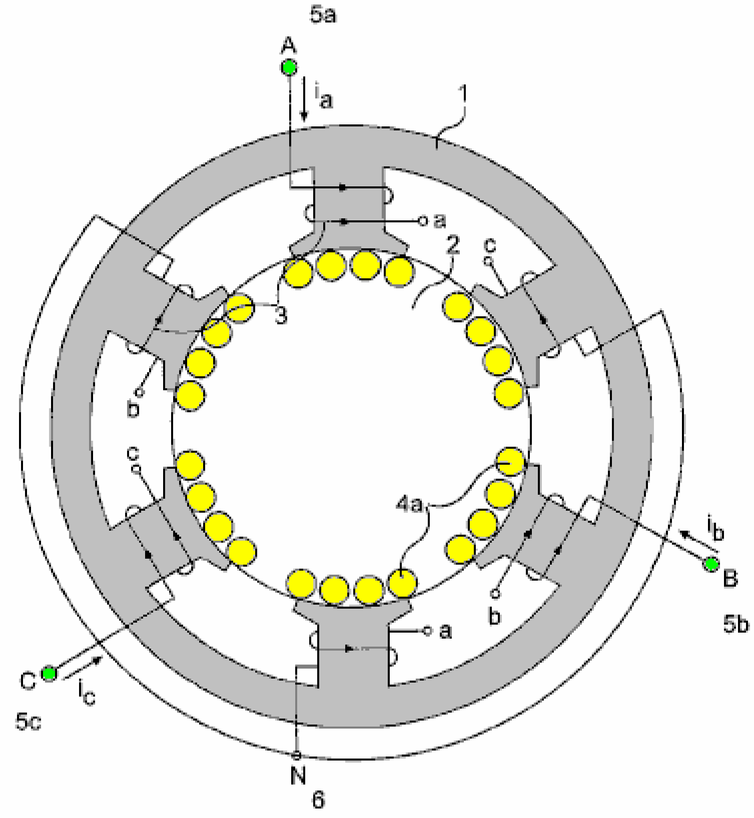

FIG. 1

The basic system can be observed in **Fig.1**, which shows one embodiment of the present invention. There is a stationary ferromagnetic core **1** with a three-phase inducting windings **3**, spaced 120 degrees and connected in Y **6** in order to provide a rotating electromagnetic field, when a three-phase voltage is applied; for the case, a two-pole arrangement. Inside this core **1** there is a second stationary ferromagnetic core **2**, with no space between them, this is, with no air-gap. This second core **2** has also a three-phase stationary winding arrangement (**4a** in **Fig.4b** and **4b** in **Fig.2**), aligned as shown in **Fig.1** and **Fig.2** with the external core inducting windings **3**. There is not any movement between the two cores, since there is no air-gap between them.

There is no shaft on either core since these are not rotating cores. The two cores can be made of stacked insulated laminations or of insulated compressed and bonded ferromagnetic powder. The system works either way, inducting three-phase voltages and currents on the stationary conductors **4a** of the internal windings **4b**, applying three-phase currents to terminals **A 5a**, **B 5b** and **C 5c** of the external windings **3**; or inducting three-phase voltages and currents on the external windings **3**, by applying three-phase currents to the terminals **T1 7a**, **T2 7b** and **T3 7c**, of the internal windings **4b**. When a three-phase voltage is applied to terminals **A 5a**, **B 5b** and **C 5c**, the currents will have the same magnitude, but will be displaced in time by an angle of 120 degrees. These currents produce magneto motive-forces, which, in turn, create a rotational magnetic flux. The arrangements may vary widely as they occur with present alternators and three-phase motors, but the basics remain the same, a stationary but electro-magnetically rotating magnetic field, inducting voltages and currents on the stationary conductors placed on the path of said rotating magnetic field. The diagram is showing a two-pole arrangement for both windings, but many other arrangements may be used, as in common generators and motors.

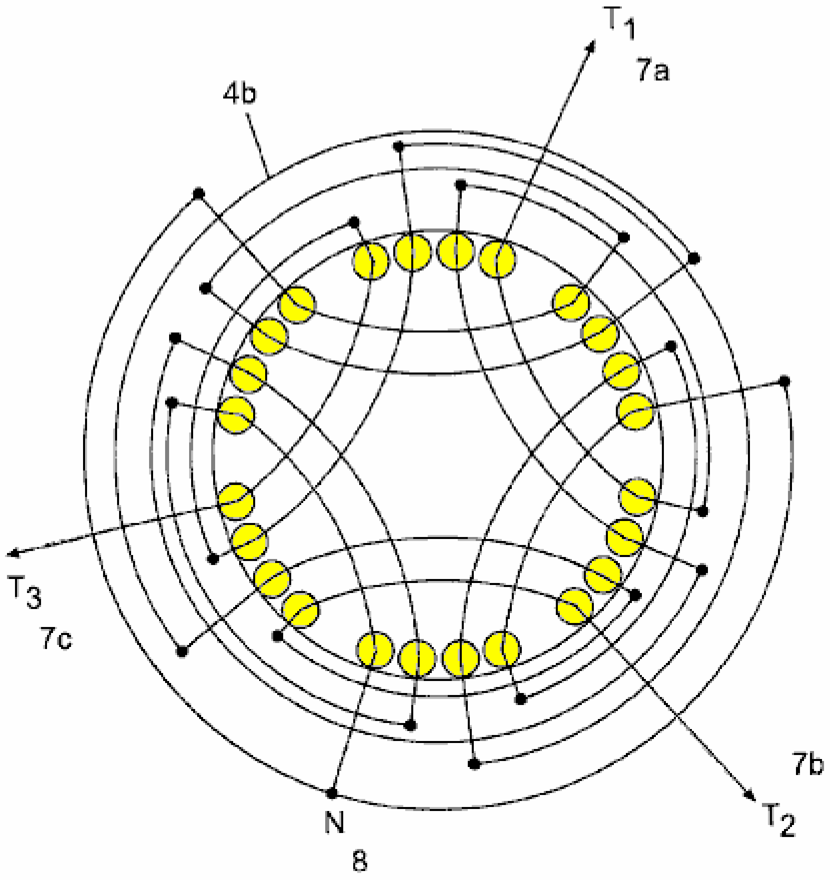

FIG. 2

Fig.2 shows the three-phase arrangement of the internal winding **4b** which has provided, in practice, symmetrical voltages and currents, due to a space angle of 120 degrees. It is similar to a two-pole arrangement. Many other three-phase or poly-phase arrangements may be used. Wherever a conductor is crossed by a rotational magnetic field, a voltage will be induced across its terminals. The interconnections depend on the use that we will give to the system. In this case, we will have a three-phase voltage in terminals **T1 7a, T2 7b** and **T3 7c** and a neutral **8**. The outgoing voltage depends on the density of the rotational magnetic flux, the number of turns of the conductor, the frequency (instead of the speed) and the length of the conductor crossed by the field, as in any other generator.

Fig.3 shows an alternate embodiment of the present invention in which the generator is made from multiple one-piece laminations **9**, stacked as a cylinder to the desired height. This embodiment can also be made of a one-piece block of compressed and bonded insulated ferromagnetic powder. The same slot **10** will accommodate the internal **4a/4b** and the external windings **3**, that is, the inducting and the induced windings (see **Fig.5**). In this case, a 24-slot laminate is shown, but the number of slots may vary widely according to the design and needs.

Fig.4 shows a two-piece single laminate for another alternate embodiment of the present invention. For practical effects the lamination can be divided into two pieces **9a, 9b**, as shown, to facilitate the insertion of the coils. Then, they are solidly assembled without separation between them, as if they were only one piece.

The laminates described above may be constructed with thin (0.15 mm thick or less) insulated laminations **9** or **9a** and **9b** of a high magnetic permeability material and low hysteresis losses such as Hiperco 50A, or similar, to reduce losses or with compressed electrically isolated ferromagnetic powder, which has lower eddy current losses and also may have low hysteresis losses, which can make the generator highly efficient.

OPERATING THE GENERATOR

The **C**ontinuous **E**lectrical **G**enerator as described and shown in the following drawings is designed and calculated to produce a strong rotating electromagnetic field with low exciting currents. By using a laminated material, such as the said Hiperco 50A, we can achieve rotating magnetic fields above two Teslas, since there are no air gap losses, mechanical losses, windage losses, armature reaction losses, etc. as said before. This may be obtained by applying a temporary three-phase current to the terminals **A**, **B** and **C 12** of the inducting coils **13, 14** and **15** (**5a, 5b** and **5c** in **Fig.1**), spaced 120 degrees from each other (see **Fig.5**).

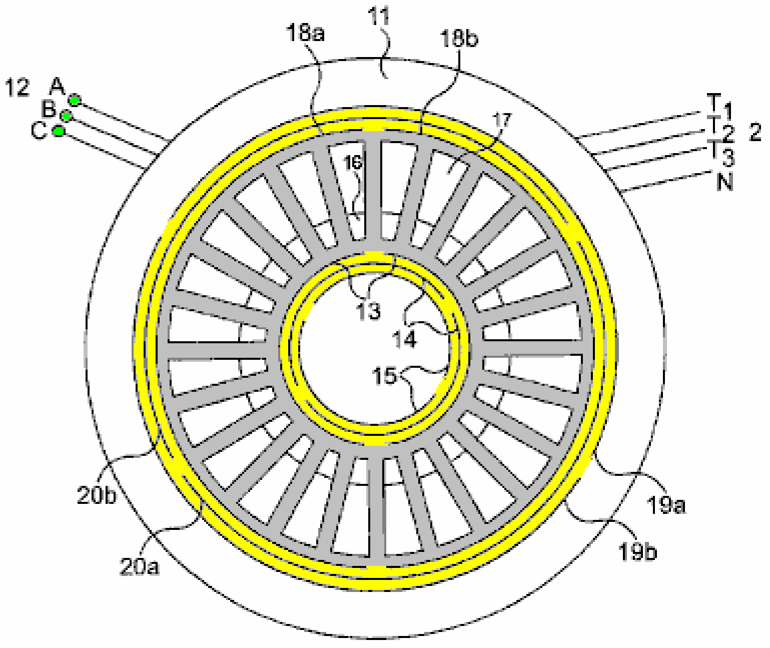

FIG. 5

Fig.5 shows the spatial distribution of the inducting windings **13, 14** and **15**, as well as the induced windings **18a, 18b, 19a, 19b, 20a** and **20b**. Both, the inducting and the induced windings are placed in the same slots **10** or **16** and **17**, with similar arrangements. Even though the system works in both directions, the better configuration seems to be to place the inducting windings **13, 14** and **15**, to the centre and the induced windings **18a, 18b, 19a, 19b, 20a** and **20b**, to the exterior, since small windings will be needed to induce a very strong rotational magnetic field, due to the small losses involved in the process, and in exchange, bigger and powerful windings will be needed to extract all the energy that the system will provide. Both windings are connected in Y (not shown), but they can be connected in different ways, as any other generator. These arrangements are equivalent to the arrangements shown for the embodiment in **Fig.1** and **Fig.2**.

The inducting coils **13, 14** and **15** are designed and calculated so that the generator may be started with common three-phase lines voltages (230 Volts 60 Hz per phase, for example). If the local lines voltages are not appropriate, we can control the voltage to the designed level by means of a three-phase variable transformer, an electronic variator or inverter etc. Once we have such strong magnetic field rotating and crossing the stationary induced coils **18a, 18b, 19a, 19b, 20a** and **20b**, a three-phase voltage will be induced across terminals **T1, T2, T3** and **N 21** in proportion to the magnetic flux density, the number of turns in the coils, the frequency used (instead of the speed), the length of the conductors cut by the rotating field, as in any other alternator. We can connect, as we desire in Y or delta, etc., as in any other alternator or generator. The outgoing currents will be three-phase currents (or poly-phase currents depending on the arrangement) and we can have a neutral **21** if we are using a Y connection, as in any other alternator.

The outgoing alternate voltages and currents are perfect sinusoidal waves, perfectly spaced in time, and totally symmetrical. The voltages and currents obtained by this method are usable in any conventional manner. Any voltage can be produced, depending on the design.

Fig.6 shows the magnetic flux pattern produced by the three-phase inducting windings **13, 14** and **15**. This pattern is similar to the pattern of an induction motor's stators. Since there is no air gap; the whole path for the magnetic flux is homogeneous with no change in materials. The core is made of thin insulated laminations of a high magnetic permeability and low hysteresis loss material; eddy current losses are minimal due to the thin lamination. There are no counter fluxes or armature reactions thus the magnetic flux may be near to saturation with a small exciting current or input energy. Due to the time differential between the three phases and the spatial distribution of the inducting windings, a rotational magnetic field will be created in the core, as shown in **Fig.7**.

Once the generator is started, a small part of the energy obtained is sent back (**Fig.8** and **Fig.9**) to feed the inducting coils **3** (in **Fig.1**) or **13, 14** and **15** (in **Fig.5**), as in any other auto-excited alternator or generator. Of course voltages and phases should be perfectly identical and aligned, and if necessary the feedback voltages should be controlled and handled by means of variable transformers, electronic variators, phase shifters (to align phases) or other type of voltage or phase controllers.

One possible method consists of the use of an electronic converter or variator **25** which initially converts two or three lines of alternating current **24** to direct current by an electronic rectifier **26** and then, electronically, converts the direct current **27** to three-phase current **28** to supply three-phase currents spaced in time 120 degrees for the electromagnetic fields **A, B** and **C 3**. Some variators or converters can accept two lines of voltage, while others will accept only a three-phase line voltage. This embodiment uses a variator of 3 kVA that accepts two 220-volt lines.

The rotational magnetic field created by the currents going through the inducting three-phase windings **13**, **14** and **15**, will induce a voltage across the terminals **T1, T2, T3, N, 29** (**7a, 7b, 7c, 8** in **Fig.2**). Then, from the outgoing current lines **29**, a derivation is made **30** to feed back the system, converting the feed back alternate currents, by means of electronic diode rectifiers **31**, to direct current **32** and then feed back the electronic converter or variator **25** to the DC terminals of the electronic rectifier **26** (See **Fig.8**). Once the feedback is connected, the **C**ontinuous **E**lectrical **G**enerator may be disconnected from the temporary source **24**, and will continue generating electric energy indefinitely.

In **Fig.9**, an alternate embodiment of the **C**ontinuous **E**lectrical **G**enerator can be observed. The basic principles remain the same as for the embodiment described above and shown in **Fig.1** and **Fig.2**. The basic differences are in the shape of the laminations and the physical distribution of the windings, as discussed and shown previously. A variation of the feedback, using a variable and shifting transformers is also shown.

The ferromagnetic core **11** is made of one-piece laminates **9** as shown in **Fig.3** (or two for convenience **9a**, **9b** as shown in **Fig.4**) stacked to the desired height. The slots **10**, as indicated before, will accommodate both the inducting **13, 14** and **15** and the induced **18a-b, 19a-b** and **20a-b** windings in the same slot **10** or **16** and **17**. The incoming three phase lines **12** feed the inducting three-phase windings **13, 14** and **15**. They are fed, initially by the temporary source **33** in the first instance, and by the three-phase return **34** once the generator is running by itself.

The inducting windings **13, 14** and **15** have a two-pole arrangement, but many other three-phase or poly-phase arrangements can be made to obtain an electromagnetic rotating field. These windings are connected in Y (not shown) in the same way shown for the embodiment shown in **Fig.1**, **Fig.2** and **Fig.8**, but may be connected in many different ways. The inducting windings **13, 14** and **15** are located in the internal portion **16** of the slot **10** (**Fig.5**).

The induced windings **18a-b**, **19a-b** and **20a-b** have a two-pole arrangement, exactly equal to the arrangement for the inducting windings **13, 14** and **15**, but many other arrangements can be made depending on the design and the needs. The induced windings must be calculated in a way that the generator will have the lowest possible synchronous reactance and resistance. In this way, most of the outgoing power will go to the charge instead of staying to overcome the internal impedance. These windings are connected in Y to generate a neutral **21**, in the same way shown in the embodiment of the present invention shown in **Fig.2**, but may be connected in different ways according to the needs. The induced windings **18a-b, 19a-b** and **20a-b** are located in the external portion **17** of the slot **10**.

The outgoing three-phase and neutral lines **21** come from the induced windings **18a-b, 19a-b** and **20a-b**. The rotational magnetic field created in the core (see **Fig.6** & **Fig.7**) by the inducting windings **13, 14** and **15**, induces a voltage across the terminals **T1, T2** and **T3**, plus a neutral, **29**. From each of the three-phase outgoing lines **21**, a return derivation **34** is made to feedback the system.

The temporary three-phase source **33** is temporarily connected to terminals **A, B** and **C 12**. The **C**ontinuous **E**lectrical **G**enerator must be started with an external three-phase source for an instant, and then disconnected.

Even though the return lines voltage can be calculated and obtained precisely by tabbing the induced windings at the voltage required by the inducting windings (according to the design), it may be convenient to place a three-phase variable transformer or other type of voltage controller **35** in the middle for more precise adjustment of the return voltage.

Placed after the variable transformer **35**, the three-phase shifting transformer **36** will correct and align any phase shift in the voltage and currents angles, before the return is connected. This system functions similarly to the system shown in **Fig.8** which uses a variator or a converter **25**.

Once the voltage and phases are aligned with the temporary source **33**, the return lines **34** are connected to the incoming lines **A, B** and **C 12** at feedback connection **37** and the temporary source **33** is then disconnected. The **C**ontinuous **E**lectrical **G**enerator will remain working indefinitely without any external source of energy, providing a great excess of energy permanently.

The outgoing electric energy provided by this system has been used to produce light and heat, run poly-phase motors, generate usable mono-phase and poly-phase voltages and currents, transform voltages and currents by means of transformers, convert the alternate outgoing poly-phase currents to direct current, as well as for other uses. The electricity obtained by the means described is as versatile and perfect as the electricity obtained today with common electric generators. But the **C**ontinuous **E**lectrical **G**enerator is autonomous and does not depend on any other source of energy but itself once it is running; may be carried anywhere with no limitations; it can be constructed in any size and provides any amount of electricity indefinitely, according to the design.

The **C**ontinuous **E**lectrical **G**enerator is and will be a very simple machine. The keystones of the systems reside in the ultra-low losses of a non-movement generation system, and in a very low synchronous reactance design.

The induced windings must be calculated in a way that the generator may have the lowest possible synchronous reactance and resistance. In this way, most of the outgoing power will go to the charge instead of staying to overcome the internal impedance.

Patent Application US 3,766,094 20th September 1971 Inventor: Michael Ognyanov

SEMICONDUCTOR COMPOSITIONS

This patent application shows the details of a device which it is claimed, can produce electricity via a solid-state oscillator. It should be noted that while construction details are provided which imply that the inventor constructed and tested several of these devices, this is only an application and not a granted patent.

ABSTRACT

A resonance oscillator electric power pack for operating a flash lamp, for example, or other electrically operated device, operates without moving mechanical parts or electrolytic action. The power pack is contained in a cylindrical metal envelope and in a preferred embodiment, is coupled to a relaxation oscillator and an incandescent lamp. Within the envelope, and insulated from it, is a semiconductor tablet having a metal base connected to the external circuit. A metal probe makes contact with a point on the semiconductor tablet and with a cylindrical ferrite rod, axially aligned with the envelope. Wound about the ferrite rod, are concentric helical coils designated as a 'primary' with many turns, and a 'secondary' with fewer turns than the primary.

One end of the primary coil is connected to the probe and the other end is connected to the secondary coil. the leads from the secondary coil are connected to the relaxation oscillator via an adjustable capacitor. Oscillation within the envelope is resonance amplified , and the induced voltage in the secondary coil is rectified for application to the relaxation oscillator and lamp. Selenium and germanium base semiconductor compositions including Te, Nd, Rb and Ga in varying proportions area used for the tablet.

BACKGROUND OF THE INVENTION

This is a continuation-in-part of my co-pending patent application Serial No. 77,452, filed 2nd October 1970, entitled "Electric Power Pack" now abandoned.

In many situations it is desirable to have a source of electric power which is not dependent on wires from a central generating station, and therefore, portable power supplies having no moving parts have been employed. typically, such portable power packs have been primary or secondary electrolytic cells which generate or store electrical energy for release by chemical action. Such batteries have a limited amount of contained energy and must often be replaced at frequent intervals to maintain equipment in operation.

Thus, as one example, flashing lights are commonly used along highways and other locations to warn of dangerous conditions. These flashing lights in remote locations are typically incandescent or gas-discharge lamps connected to some type of relaxation oscillator powered by a battery. The batteries employed in such blinking lights have a limited lifetime and must be periodically replaced, typically each 250 to 300 hours of operation. This involves a rather large labour cost in replacing the expended batteries with fresh ones and additional cost for primary cells or for recharging secondary cells. It is desirable to provide an electric power pack capable of providing a sufficient quantity of electrical energy over a prolonged period of time so that the requirement for periodic replacement of the electrolytic cells can be avoided. Such a power pack is valuable even if appreciably more expensive than batteries because of the greatly reduced labour costs required for periodic replacements.

BRIEF SUMMARY OF THE INVENTION

There is provided in practice of this invention according to a preferred embodiment, semiconductive compositions selected from the Group consisting of:

Selenium with, from 4.85% to 5.5% Tellurium, from 3.95% to 4.2% Germanium, from 2.85% to 3.2% Neodymium, and from 2.0% to 2.5% Gallium.

Selenium with, from 4.8% to 5.5% Tellurium, from 3.9% to 4.5% Germanium, from 2.9% to 3.5% Neodymium and from 4.5% to 5% Rubidium, and

Germanium with, from 4.75% to 5.5% Tellurium, from 4.0% to 4.5% Neodymium and from 5.5% to 7.0% Rubidium.

DRAWINGS

These and other features and advantages of the invention will be appreciated and better understood by reference to the following detailed description of a preferred embodiment when considered in conjunction with the following drawings:

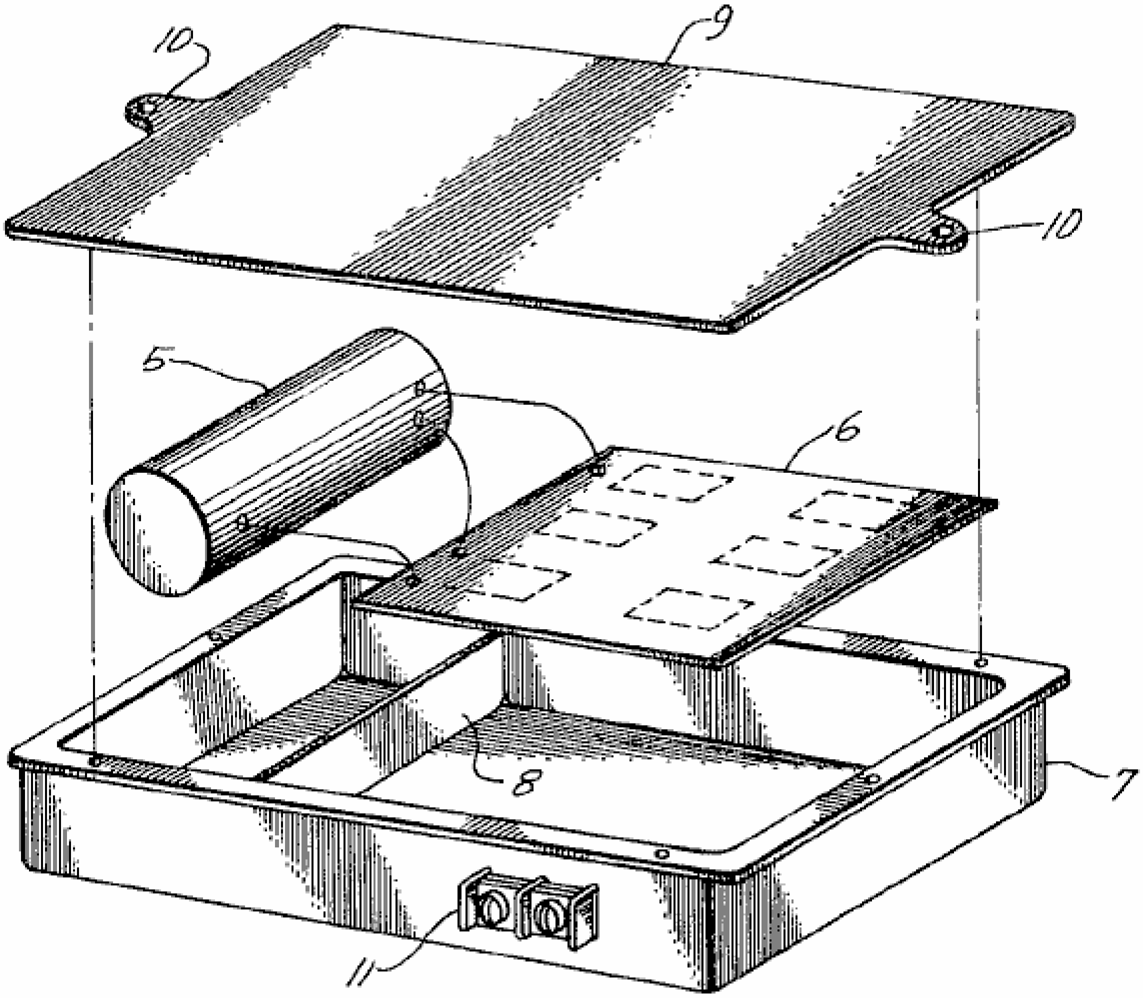

Fig.1 illustrates in exploded schematic, a flashing lamp connected to an electric power supply constructed according to the principles of this invention.

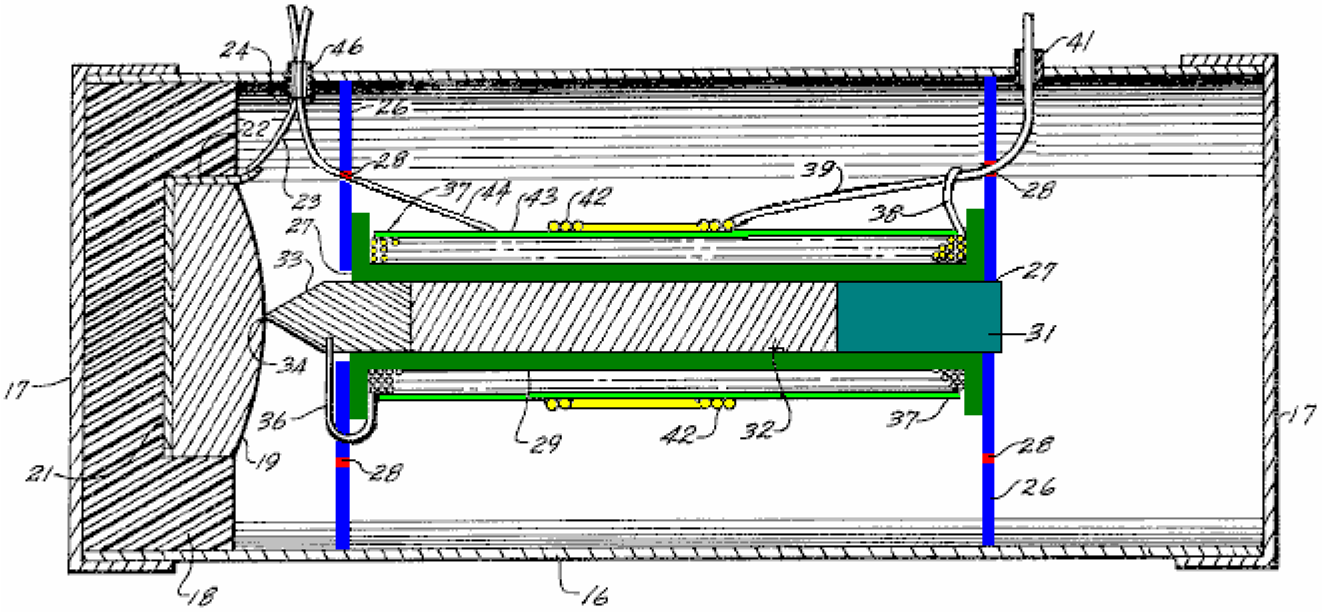

Fig.2 illustrates in longitudinal cross-section, the power pack of Fig.1

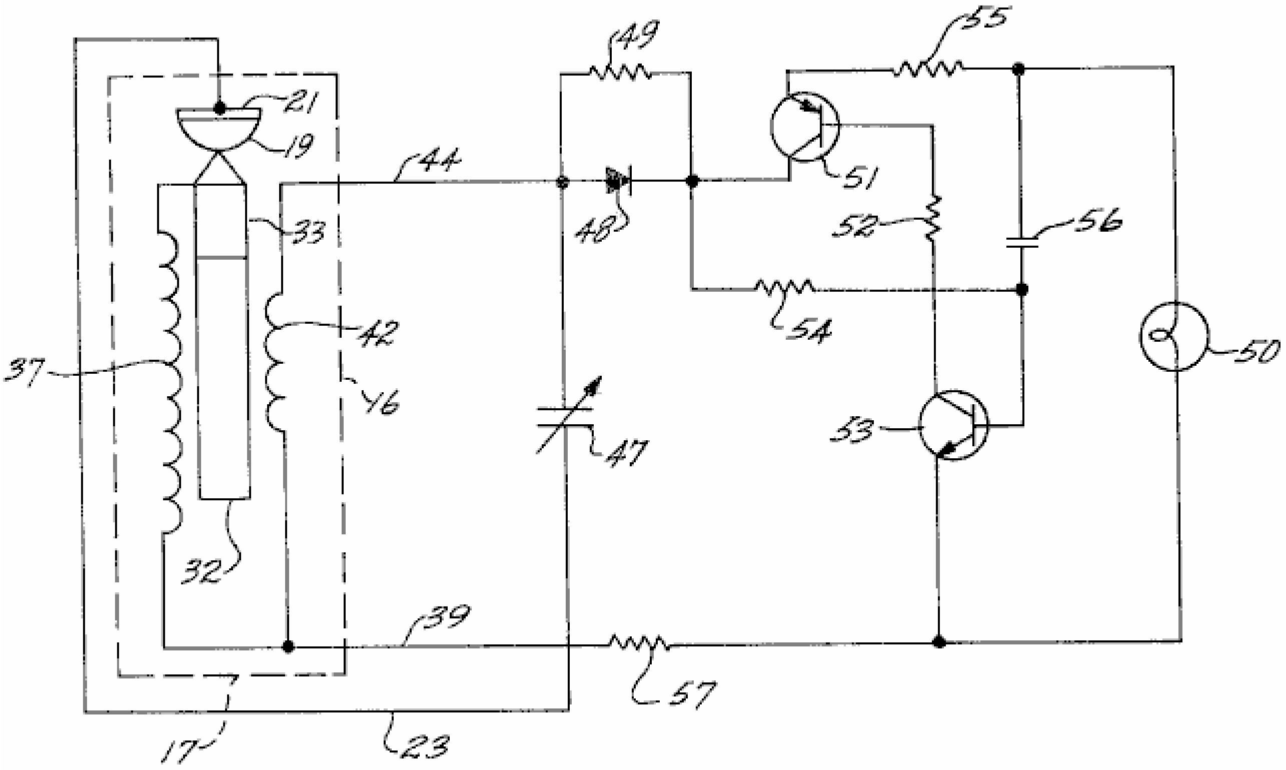

Fig.3 is an electric circuit diagram of the system.

DESCRIPTION

Fig.1 illustrates schematically, a typical flashing lamp having a power supply constructed according to the principles of this invention. As illustrated in this preferred embodiment, an electric power pack **5**, is connected electrically to a relaxation oscillator circuit (shown only schematically) on a conventional printed-circuit board **6**.

The power pack **5** and the printed-circuit board are mounted in a metal box **7**, which has a transverse partial partition **8**, which creates two spaces, one for the power pack and the other for the printed-circuit board which is prevented from contacting the metal box by any convenient insulating mounting. Preferably, these components are potted in place in a conventional manner.

A cover **9**, having mounting lugs **10**, is riveted on to the box after assembly. A small terminal strip **11**, mounted on one side of the box **7**, provides electrical contacts for connection to a load such as an incandescent lamp (not shown in Fig.1). the lamp provides a flash of light when the relaxation oscillator switches. Although the described system is employed for a flashing lamp, it will be apparent that other loads may be powered by the invention.

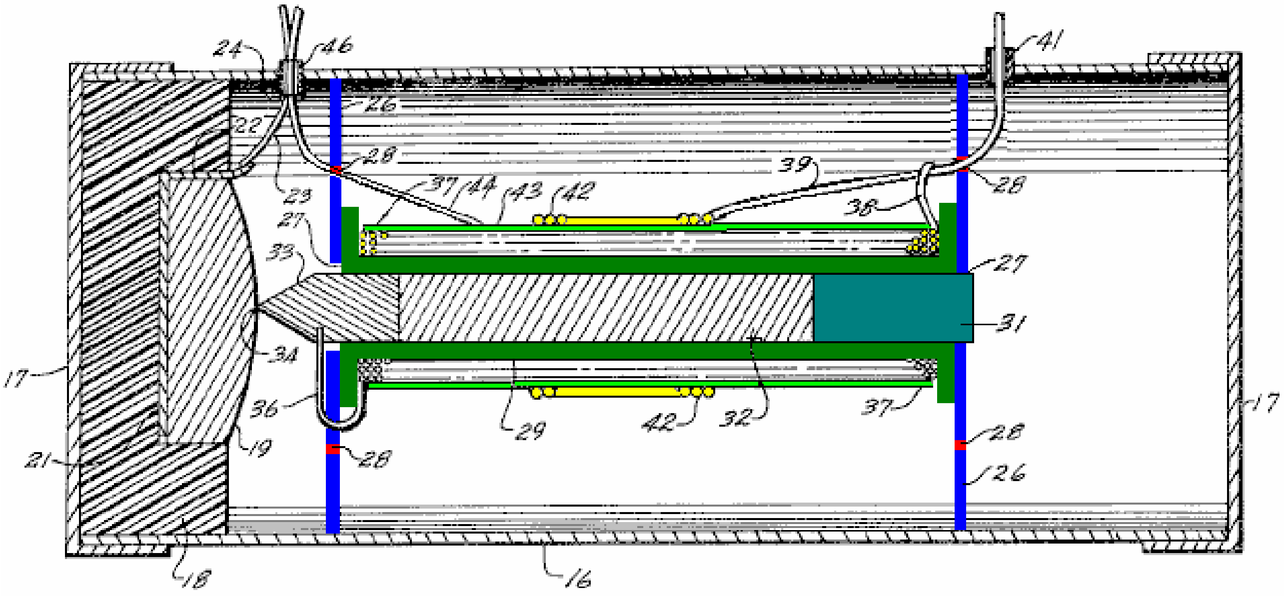

In **Fig.2**, the electric power pack **10**, is illustrated in longitudinal cross-section and has dimensions as follows: These dimensions are provided by way of example for powering a conventional flashing lamp and it will be clear that other dimensions may be used for other applications. In particular, the dimensions may be enlarged in order to obtain higher power levels and different voltage or current levels. The power pack is comprised of a cylindrical metal tube **16**, having closely fitting metal caps **17** at each end, which are preferably sealed to the tube after the internal elements are inserted in place. The metal tube **16** and caps **17**, which are preferably of aluminium, thus form a closed conductive envelope, which in a typical embodiment, has an inside diameter of about 0.8 inch and a length of about 2.25 inches.

Mounted within one end of the envelope is a plastic cup **18**, the dimensions of which are not critical, however, a wall thickness of at least 1/16 inch is preferred. Mounted within the plastic cup **18** is a semiconductor tablet **19** having a flat base and somewhat domed opposite side. The composition of the semiconductor tablet **19** is set out in greater detail below. Typically, the semiconductor tablet has a mass of about 3.8 grams. A metal disc **21** is positioned beneath the base of the tablet **19** in the cup **18**, and is preferably adhesively bonded inside the cup. The metal disc is tightly fitted to the base of the tablet so that good electrical contact is obtained over a substantial area of the semiconductor.

An ear **22** on one edge of the disc is soldered to a wire **23**, which extends through a short insulating sleeve **24** which passes through a hole in the side of the metal envelope. The insulating sleeve **24** acts as a grommet and ensures that there is no damage to the insulation of wire **23** and subsequent accidental short circuiting between the wire and the metal envelope. Preferably, the insulating sleeve **24** is sealed with a small amount of plastic cement or the like, in order to maintain clean air within the cylindrical envelope. Two other openings for leads through the tube **16**, as mentioned below, are also preferably sealed to maintain cleanliness within the envelope.

A pair of circular metal discs **26**, are fitted inside tube **16** and are preferably cemented in place to prevent shifting. The two discs **26**, are equally spaced from the opposite ends of the envelope and are spaced apart by slightly more than 1.15 inches. Each of the discs has a central aperture **27**, and there is a plurality of holes **28**, extending through the disc in a circular array midway between the centre of the disc and it's periphery. The holes **28** are preferably in the size range of about 0.01 to 0.06 inch in diameter and there are 12 on each disc located at 30^0 intervals around the circle.

The two discs **26** divide the interior of the cylindrical envelope into three chambers, and the pattern of holes **28** provides communication between the chambers and affects the electrical properties of the cavity. It is believed that the pattern of holes affects the inductive coupling between the cavities inside the envelope and influences the oscillations in them.

Although an arrangement of 12 holes at 30^0 centres has been found particularly advantageous in the illustrated embodiment, it is found in other arrangements that a pattern of 20 holes at 18^0 centres or a pattern of 8 holes at 45^0 centres, provides optimum operation. In either case, the circle of holes **28** is midway between the centre and the periphery of the disc.

Mounted between the discs **26** is a plastic spool **29** which has an inside distance of 1.1 inches between its flanges. The plastic spool **29** preferably has relatively thin walls and an internal bore diameter of 1/8 inch. A plastic mounting plug **31**, is inserted through the central aperture **27** of the disc **26** farthest from the semiconductor table **19**, and into the bore of the spool **29.** The plastic plug **31** is preferably cemented to the disc **26** in order to hold the assembly together.

Also mounted inside the bore of spool **29** is a cylindrical ferrite core **32**, about 1/8 inch diameter and 3/4 inch long. Although a core of any magnetic ferrite is preferred, other ferromagnetic materials having similar properties can be used if desired. The core **32**, is in electrical contact with a metal probe **33** about 1/4 inch long. half of the length of the probe **33** is in the form of a cylinder positioned within the spool **29**, and the other half is in the form of a cone ending in a point **34** in contact with the domed surface of the semiconductor tablet **19** where it makes an electrical contact with the semiconductor in a relatively small point.

Electrical contact is also made with the probe **33** by a lead **36**, which passes through one of the holes **28** in the disc **26** nearer to the semiconductor tablet and thence to a primary coil **37**, wound on the plastic spool **29**. The primary coil **37** is in the form of 800 to 1000 turns wound along the length of the spool, and the lead **38** at the opposite end of the coil **37** is soldered to one of the external leads **39** of the power pack. This lead **39** proceeds through one of the holes **28** in the disc farthest from the semiconductor tablet **19**, and through an insulating sleeve **41** in the metal tube **16**.

The lead **39** is also connected to one end of a secondary coil **42** which is composed of 8 to 10 turns around the centre portion of the primary coil **37**. A thin insulating sheet **43** is provided between the primary and secondary coils. The other lead **44** from the secondary coil passes through one of the holes **28** in the disk nearer the semiconductor tablet and thence through an insulating sleeve **46** through the wall of the tube **16**.

Fig.3 illustrates schematically, the electrical circuit employing an electric power pack constructed according to the principles of this invention. At the left hand side of **Fig.3**, the arrangement of elements is illustrated in a combination of electrical schematic and mechanical position inside tube **16** for ready correlation with the embodiment illustrated in **Fig.2**. Thus, the semiconductor tablet **19**, probe **33** and ferrite core **32** are shown in both their mechanical and electrical arrangement, the core being inductively coupled to the coils **37** and **42**. The lead **23** from the metal base of the semiconductor tablet **19**, is connected to a variable capacitor **47**, the other side of which is connected to the lead **44** from the secondary coil **42**. The lead **44** is also connected to a rectifying diode **48** shunted by a high value resistor **49**.

It will be seen that the variable capacitor **47** is in a tank circuit with the inductive coils **37** and **42** which are coupled by the ferrite core **32**, and this circuit also includes the semiconductor tablet **19** to which point contact is made by the probe **33**. The mechanical and electrical arrangement of these elements provides a resonant cavity in which resonance occurs when the capacitor 47 is properly trimmed. The diode **48**, rectifies the oscillations in this circuit to provide a suitable DC for operating an incandescent lamp **50** or similar load.

The rectifying diode **48** is connected to a complementary-symmetry relaxation circuit for switching power to the load **50**. The diode is connected directly to the collector of a PNP transistor **51** which is in an inverted connection. the emitter of the PNP transistor is connected to one side of the load **50** by way of a timing resistor **55**. The base of the transistor **51** is connected by way of a resistor **52** and a capacitor **56** to the collector of an NPN transistor **53**, the emitter of which is connected to the other side of the load **50**. The base of the NPN transistor **53** is coupled to the diode by a resistor **54**. The emitter of the PNP transistor **51** is fed back to the base of the NPN transistor **53** by the resistor **55**. Current flow through the lamp **50** is also limited by a resistor **57** which couples one side of the lamp and the emitter of the NPN transistor **53** to the two coils **37** and **42** by way of the common lead **39**.

The electrical power pack is believed to operate due to a resonance amplification once an oscillation has been initiated in the cavity, particularly the central cavity between the discs **26**. This oscillation, which apparently rapidly reaches amplitudes sufficient for useful power, is then half-wave rectified for use by the diode **48**. With such an arrangement, a voltage level of several volts has been obtained, and power sufficient for intermittent operation of a lamp requiring about 170 to 250 milliwatts has been demonstrated. The resonant amplification is apparently due to the geometrical and electrical combination of the elements, which provide inductive coupling of components in a suitable resonant circuit. This amplification is also, at least in part, due to unique semiconductor properties in the tablet **19**, which has electronic properties due to a composition giving a unique atomic arrangement, the exact nature of which has not been measured.

The semiconductor tablet has electronic properties which are determined by it's composition and three such semiconductors satisfactory for use in the combination have been identified. In two of these, the base semiconductor material is selenium provided with suitable dopant elements, and in the third, the base element is germanium, also suitably doped. The semiconductor tablets are made by melting and casting in an arrangement which gives a large crystal structure. It has not been found necessary to provide a selected crystal orientation in order to obtain the desired effects.

A preferred composition of the semiconductor includes about 5% by weight of tellurium, about 4% by weight of germanium, about 3% by weight of neodymium and about 4.7% by weight of rubidium, with the balance of the composition being selenium. Such a composition can be made by melting these materials together or by dissolving the materials in molten selenium.

Another highly advantageous composition has about 5% by weight of tellurium, about 4% by weight of germanium, about 3% by weight of neodymium, and about 2.24% by weight of gallium, with the balance being selenium. In order to make this composition, it is found desirable to add the very low melting point gallium in the form of gallium selenide rather than elemental gallium.

A third suitable composition has about 5% by weight of tellurium, about 4% by weight of neodymium, about 6% by weight of rubidium, with the balance being germanium. These preferred compositions are not absolute and it has been found that the level of dopant in the compositions can be varied within limits without significant loss of performance. Thus, it is found that the proportion of tellurium in the preferred composition can range from about 4.8% to about 5.5% by weight; the germanium can range from about 3.9% to 4.5% by weight; neodymium can range from about 2.9% to 3.5% by weight, and rubidium can vary from about 4.5% to 5.0% by weight. The balance of the preferred composition is selenium although it has also been found that nominal impurity levels can be tolerated and no great care is required in preventing minor contamination.

The other selenium base composition useful in practice of this invention can have a tellurium concentration in the range of from about 4.85% to 5.5% by weight, germanium in the range of from about 3.95% to 4.2% by weight, neodymium in the range of from about 2.85% to 3.2% by weight, and gallium in the range of from about 2.0% to 2.5% by weight. As in the preferred composition, the balance is selenium and nominal impurity levels can be tolerated. It is preferred to add the gallium in the form of gallium selenide rather than as elemental gallium with a corresponding decrease in the selenium used to make up the composition.

The above selenium base compositions are easier to make and less expensive than the germanium base composition and are therefore preferable for most applications. It is found that these are particularly suited for relatively small semiconductor tablets up to about 1 inch or a little less. For relatively large tablets, it is preferred to use the germanium base composition.

The germanium base composition has a tellurium level in the range of from about 4.75% to 5.5% by weight, neodymium in the range of from about 4.0% to 4.5% by weight, and rubidium in the range of from about 5.5% to 7.4% by weight. It is also found that it is of greater importance to maintain purity of the germanium base compositions than the selenium base compositions. Although the exact purity levels have not been ascertained, it is in excess of 99%.

It has been found that it is not necessary to have single crystals in the semiconductor tablets and any convenient grain size in excess of about 1 millimetre appears satisfactory. In the above compositions, when the recited ranges are exceeded, oscillation in the power pack drops off rapidly and may cease altogether.

The reasons that these compositions are satisfactory in the arrangement providing resonance amplification has not been determined with certainty. It is possible that the semiconductor serves as a source of electrons for providing an oscillating current in the circuit. This is, of course, combined with a relatively large area contact to one side of the semiconductor tablet, and a point contact on another area. Any resonant current in the coils wound on the ferrite rod, induces a varying magnetic field in the resonant cavity, and the electrical connection between the ferrite rod and the metal probe, provides a feedback of this oscillation to the semiconductor tablet.

it should particularly be noted that the oscillation in the circuit does not commence until it is initiated by an oscillating signal. In order to accomplish this, it is only necessary to apply a few millivolts of AC for a few seconds to the semiconductor tablet and the associated coils coupled to it. The initial signal applied to the base of the semiconductor tablet and the lead **39** is preferably in the frequency range of 5.8 to 18 Mhz and can be as high as 150 Mhz. Such a signal can be applied from any conventional source and no great care appears necessary to provide a single frequency signal or to eliminate noise. Once such energisation has been applied to the circuit and oscillations initiated, it does not appear to be necessary to apply such a signal again. This is apparently due to the feedback provided by the ferrite rod to the probe which makes contact with the semiconductor tablet.

Energy is, of course, dissipated in the lamp, or other utilisation device, as the combination operates. Such energy may come from deterioration of the semiconductor tablet as oscillations continue; however, if there is any such deterioration, it is sufficiently slow that a power source may be operated for many months without attendance. Such a source of energy may be augmented by ambient Radio Frequency radiation, coupled into the resonant cavity by the external leads. This is a surprising phenomenon because the leads are small compared to what would normally be considered an adequate antenna, and it is therefore postulated that stimulated amplification may also be a consequence of the unique electronic configuration of the semiconductors having the compositions specified above.

Although only one embodiment of electric power pack constructed according to principles of this invention has been described and illustrated here, many modifications and variations will be apparent to one skilled in the art. Thus, for example, a larger power pack may be axially arranged in a cylindrical container with various electronic elements arranged in the annular space. It is therefore to be understood that other configurations are included within the scope of the invention.

EDWIN GRAY: ELECTRIC MOTOR

US Patent 3,890,548 June 17, 1975 Inventor: Edwin V. Gray snr.

PULSED CAPACITOR DISCHARGE ELECTRIC ENGINE

Please note that this is a re-worded extract from Edwin Gray's Patent 3,890,548. It describes his high voltage motor and the circuitry used to drive it. Please be aware that the underlying technology was developed by Marvin Cole and Edwin Gray did not understand it. Also, Edwin wanted at all costs to conceal any useful technology while getting patents to encourage investors, so please understand that this patent is not intended to tell you how to make a working system of this type.

SUMMARY OF THE INVENTION:

This invention relates to electric motors or engines, and more particularly to a new electric machine including electromagnetic poles in a stator configuration and electromagnetic poles in a rotor configuration, wherein in one form thereof, the rotor is rotatable within the stator configuration and where both are energised by capacitor discharges through rotor and stator electromagnets at the instant of the alignment of a rotor electromagnet with a stator electromagnet. The rotor electromagnet is repelled from the stator electromagnet by the discharge of the capacitor through the coils of both the rotor and stator electromagnets at the same instant.

In an exemplary rotary engine according to this invention, rotor electromagnets may be disposed 120 degrees apart on a central shaft and major stator electromagnets may be disposed 40 degrees apart in the motor housing about the stator periphery. Other combinations of rotor elements and stator elements may be utilised to increase torque or rate of rotation.

In another form, a second electromagnet is positioned to one side of each of the major stator electromagnets on a centreline 13.5 degrees from the centreline of the stator magnet, and these are excited in a predetermined pattern or sequence. Similarly, to one side of each rotor electromagnet, is a second electromagnet spaced on a 13.5 degree centreline from the major rotor electromagnet. Electromagnets in both the rotor and stator assemblies are identical, the individual electromagnets of each being aligned axially and the coils of each being wired so that each rotor electromagnetic pole will have the same magnetic polarity as the electromagnet in the stator with which it is aligned and which it is confronting at the time of discharge of the capacitor.

Charging of the discharge capacitor or capacitors is accomplished by an electrical switching circuit wherein electrical energy from a battery or other source of d-c potential is derived through rectification by diodes.

The capacitor charging circuit comprises a pair of high frequency switchers which feed respective automotive-type ignition coils employed as step-up transformers. The "secondary" of each of the ignition coils provides a high voltage square wave to a half-wave rectifier to generate a high voltage output pulse of d-c energy with each switching alternation of the high frequency switcher. Only one polarity is used so that a unidirectional pulse is applied to the capacitor bank being charged.

Successive unidirectional pulses are accumulated on the capacitor or capacitor bank until discharged. Discharge of the bank of capacitors occurs across a spark gap by arc-over. The gap spacing determines the voltage at which discharge or arc-over occurs. An array of gaps is created by fixed elements in the engine housing and moving elements positioned on the rotor shaft. At the instant when the moving gap elements are positioned opposite fixed elements during the rotor rotation, a discharge occurs through the coils of the aligned rotor and stator electromagnets to produce the repulsion action between the stator and rotor electromagnet cores.

A plurality of fixed gap elements are arrayed in a motor housing to correspond to the locations of the stator electromagnets in the housing. The rotor gap elements correspond to the positions of the rotor electromagnets on the rotor so that at the instant of correct alignment of the gaps, the capacitors are discharged to produce the necessary current through the stator and rotor coils to cause the electromagnets to repel one another.

The charging circuits are arranged in pairs, and are such that the discharge occurs through both rotor and stator windings of the electromagnets, which are opposite one another when the spark gap elements are aligned and arc-over.

The speed of the rotor can be changed by means of a clutch mechanism associated with the rotor. The clutch shifts the position of the rotor gap elements so that the discharge will energise the stator coils in a manner to advance or retard the time of discharge with respect to the normal rotor/stator alignment positions. The discharge through the rotor and stator then occurs when the rotor has passed the stator by 6.66 degrees for speed advance.

By causing the discharge to occur when the rotor position is approaching the stator, the repulsion pulse occurs 6.66 degrees before the alignment position of the rotor and stator electromagnets, thus reducing the engine speed.

The clutch mechanism for aligning capacitor discharge gaps for discharge is described as a control head. It may be likened to a firing control mechanism in an internal combustion engine in that it “fires” the electromagnets and provides a return of any discharge overshoot potential back to the battery or other energy source.

The action of the control head is extremely fast. From the foregoing description, it can be anticipated that an increase in speed or a decrease in speed of rotation can occur within the period in which the rotor electromagnet moves between any pair of adjacent electromagnets in the stator assembly. These are 40 degrees apart so speed changes can be effected in a maximum of one-ninth of a revolution.

The rotor speed-changing action of the control head and its structure are believed to be further novel features of the invention, in that they maintain normal 120 degree firing positions during uniform speed of rotation conditions, but shift to 6.66 degree longer or shorter intervals for speed change by the novel shift mechanism in the rotor clutch assembly.

Accordingly, the preferred embodiment of this invention is an electric rotary engine wherein motor torque is developed by discharge of high potential from a bank of capacitors, through stator and rotor electromagnet coils when the electromagnets are in alignment. The capacitors are charged from batteries by a switching mechanism, and are discharged across spark gaps set to achieve the discharge of the capacitor charge voltage through the electromagnet coils when the gaps and predetermined rotor and stator electromagnet pairs are in alignment.

Exemplary embodiments of the invention are herein illustrated and described. These exemplary illustrations and description should not be construed as limiting the invention to the embodiments shown, because those skilled in the arts appertaining to the invention may conceive of other embodiments in the light of the description within the ambit of the appended claims.

BRIEF DESCRIPTION OF THE DRAWINGS:

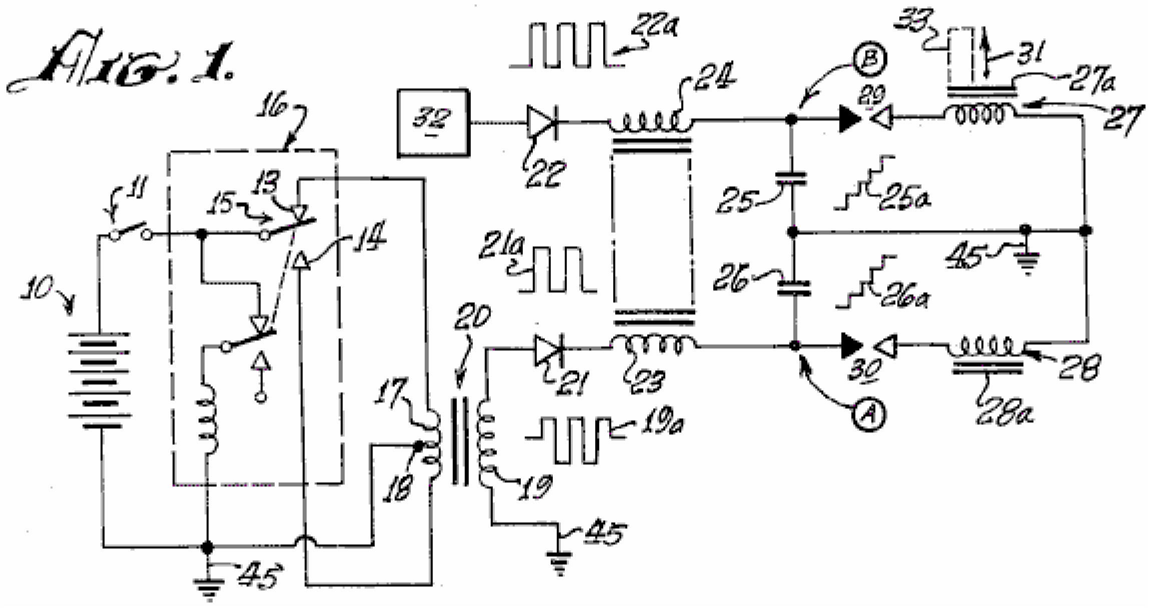

Fig.1 is an explanatory schematic diagram of a capacitor charging and discharging circuit utilised in the present invention.

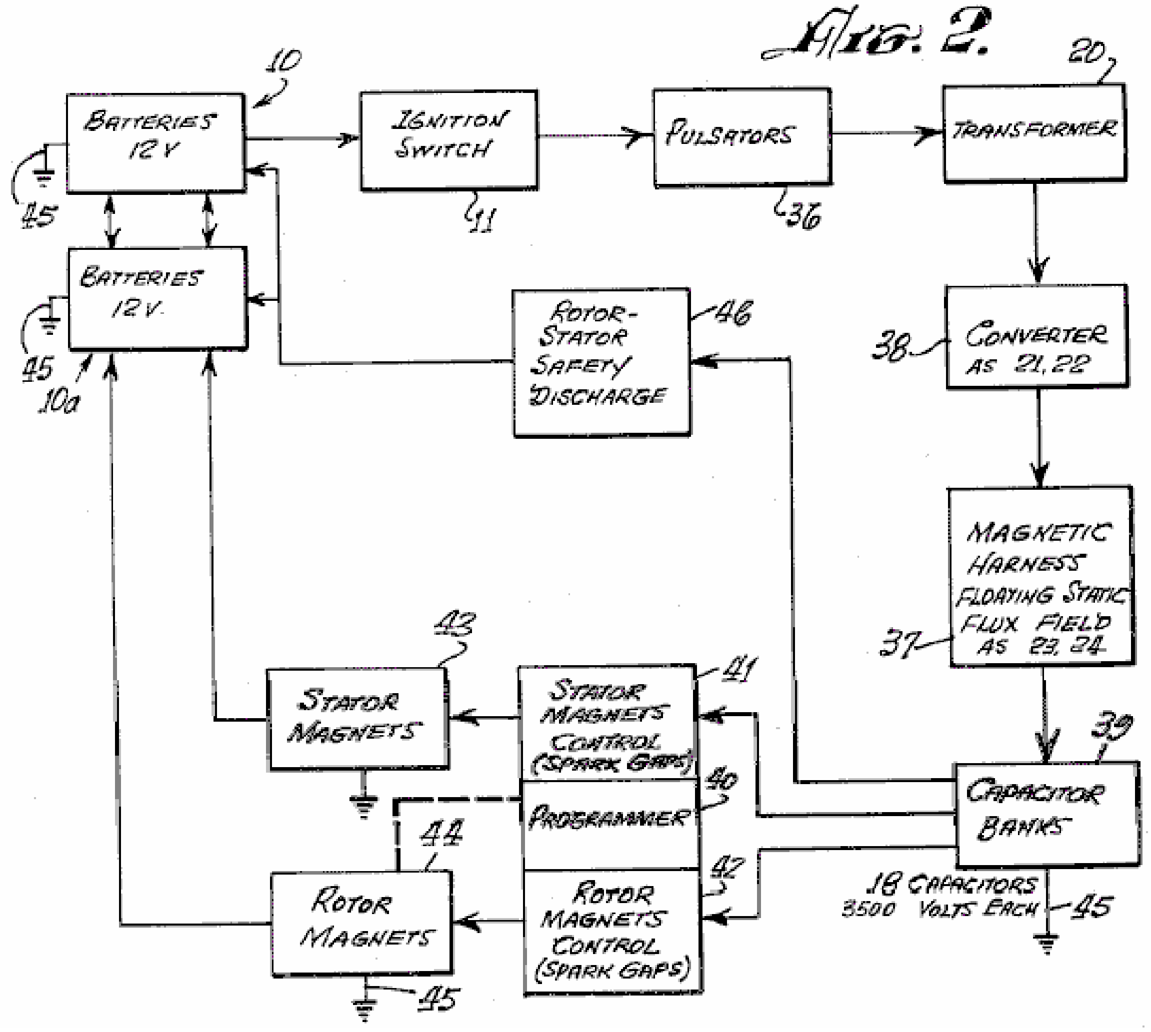

Fig.2 is a block diagram of an exemplary engine system according to the invention.

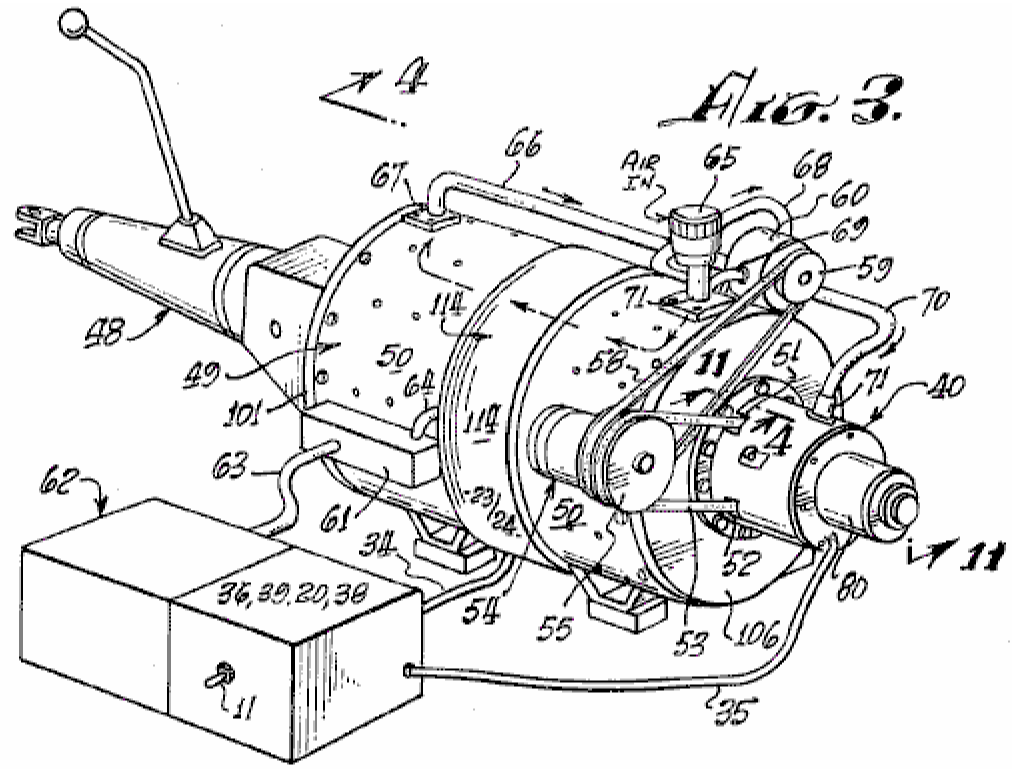

Fig.3 is a perspective view of a typical engine system according to the invention, coupled to an automotive transmission.

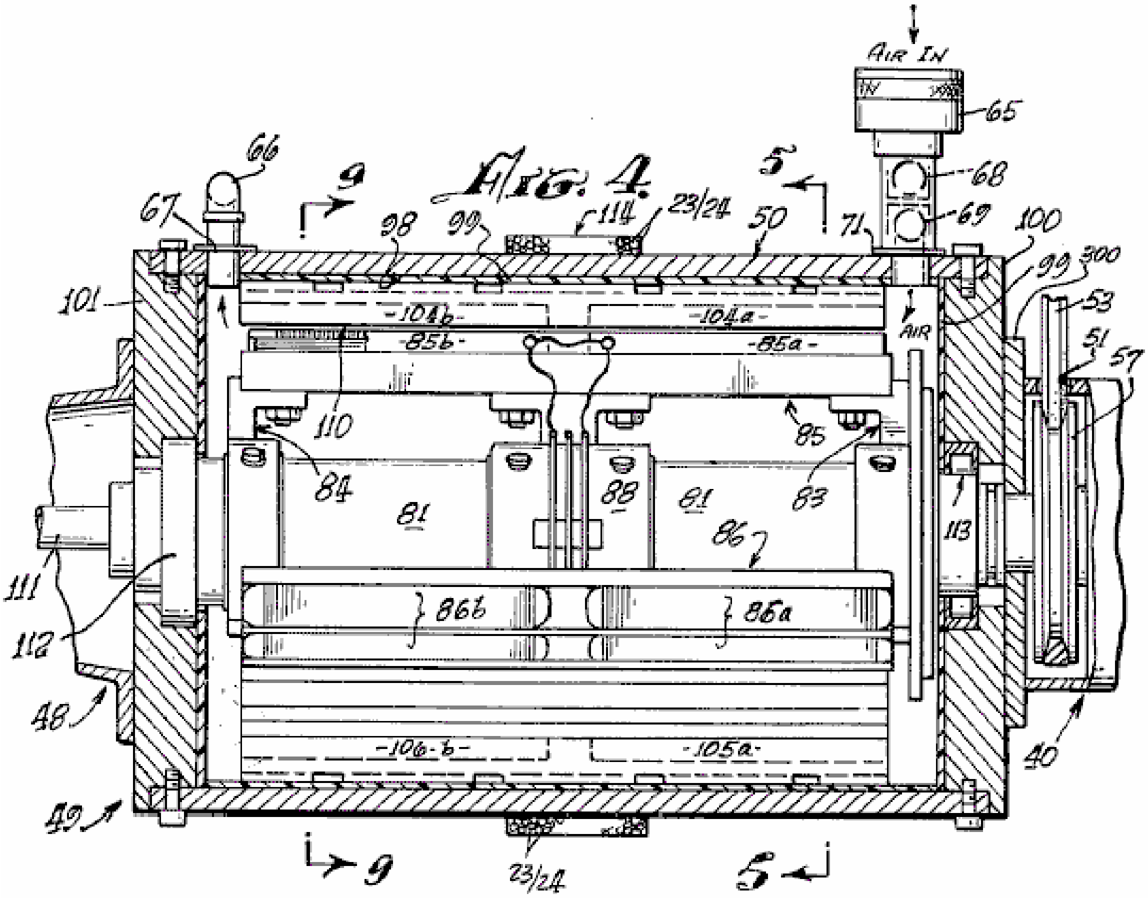

Fig.4 is an axial sectional view taken at line 4---4 in Fig.3

Fig. 5.

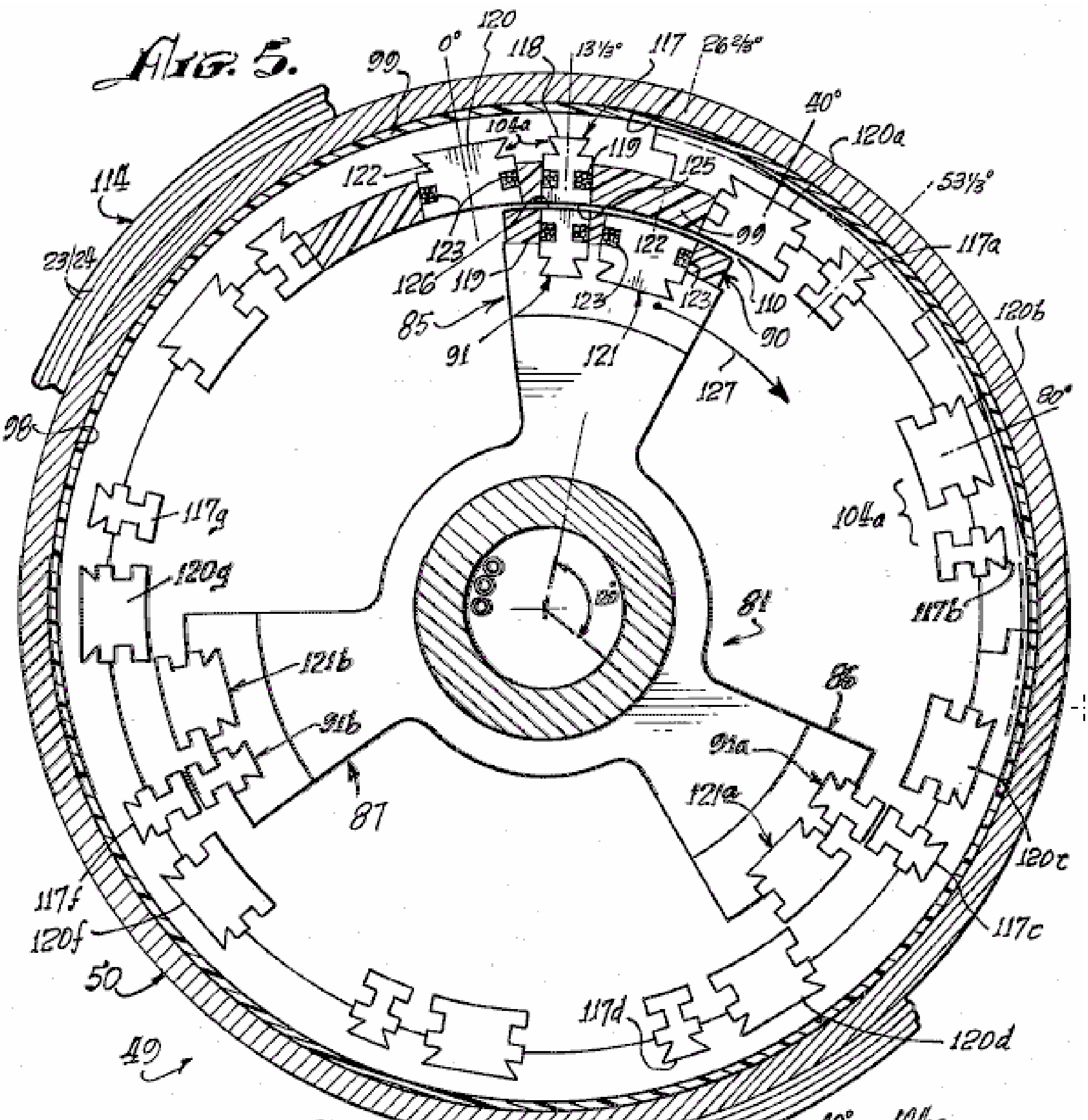

Fig. 6.

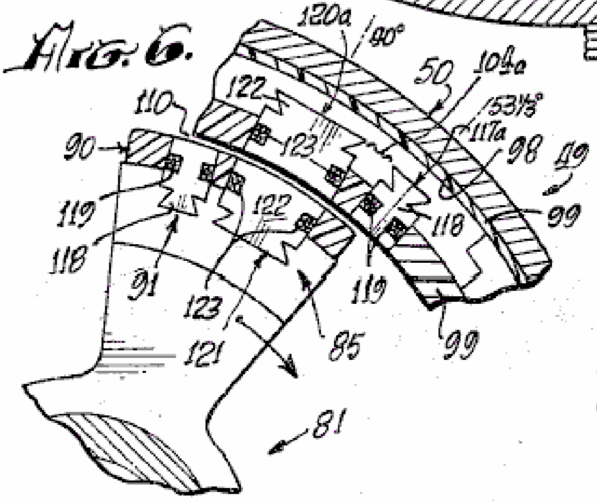

Fig. 7.

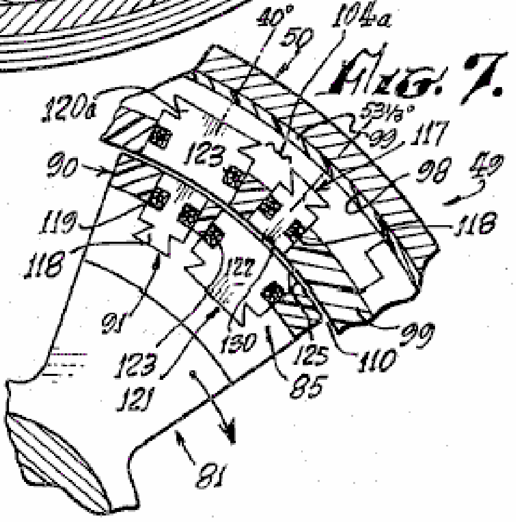

Fig.5 is a sectional view taken at line 5---5 in Fig.4

Fig.6 and **Fig.7** are fragmentary sectional views, corresponding to a portion of Fig.5, illustrating successive advanced positions of the engine rotor therein.

FIG. 8.

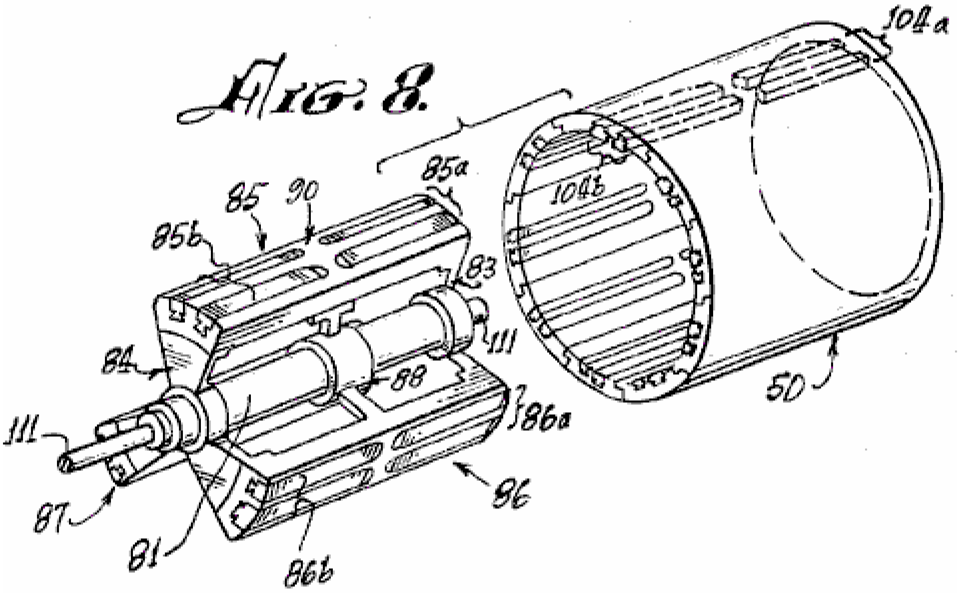

Fig.8 is an exploded perspective view of the rotor and stator of the engine of Fig.3 and Fig.4

FIG. 9.

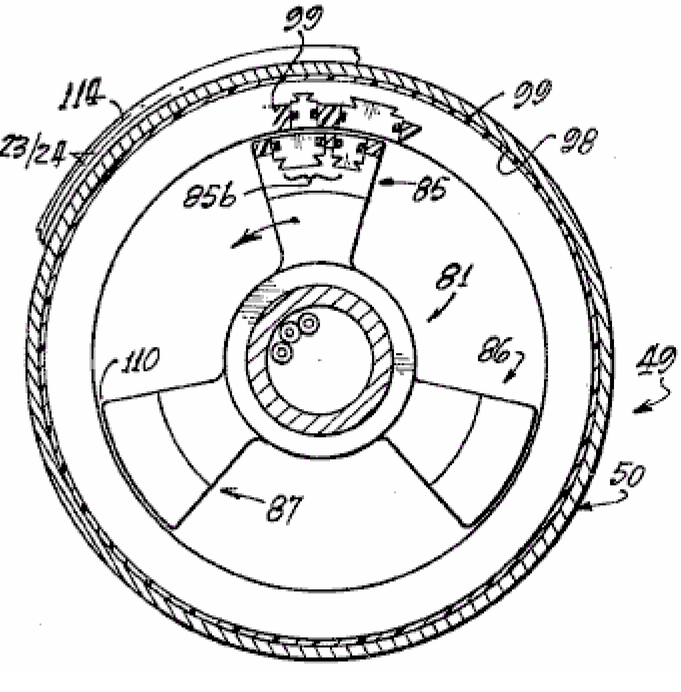

Fig.9 is a cross-sectional view taken at line 9---9 of Fig.4

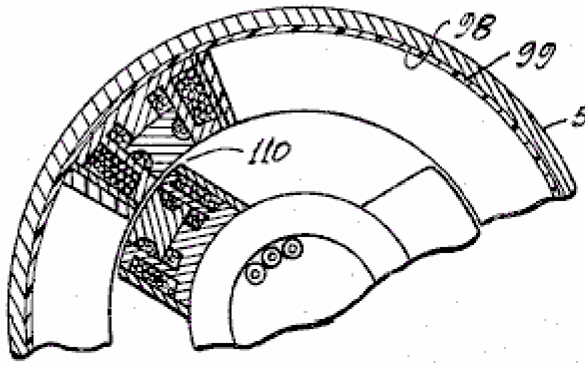

FIG. 10.

Fig.10 is a partial sectional view, similar to the view of Fig.9, illustrating a different configuration of electromagnets in another engine embodiment of the invention.

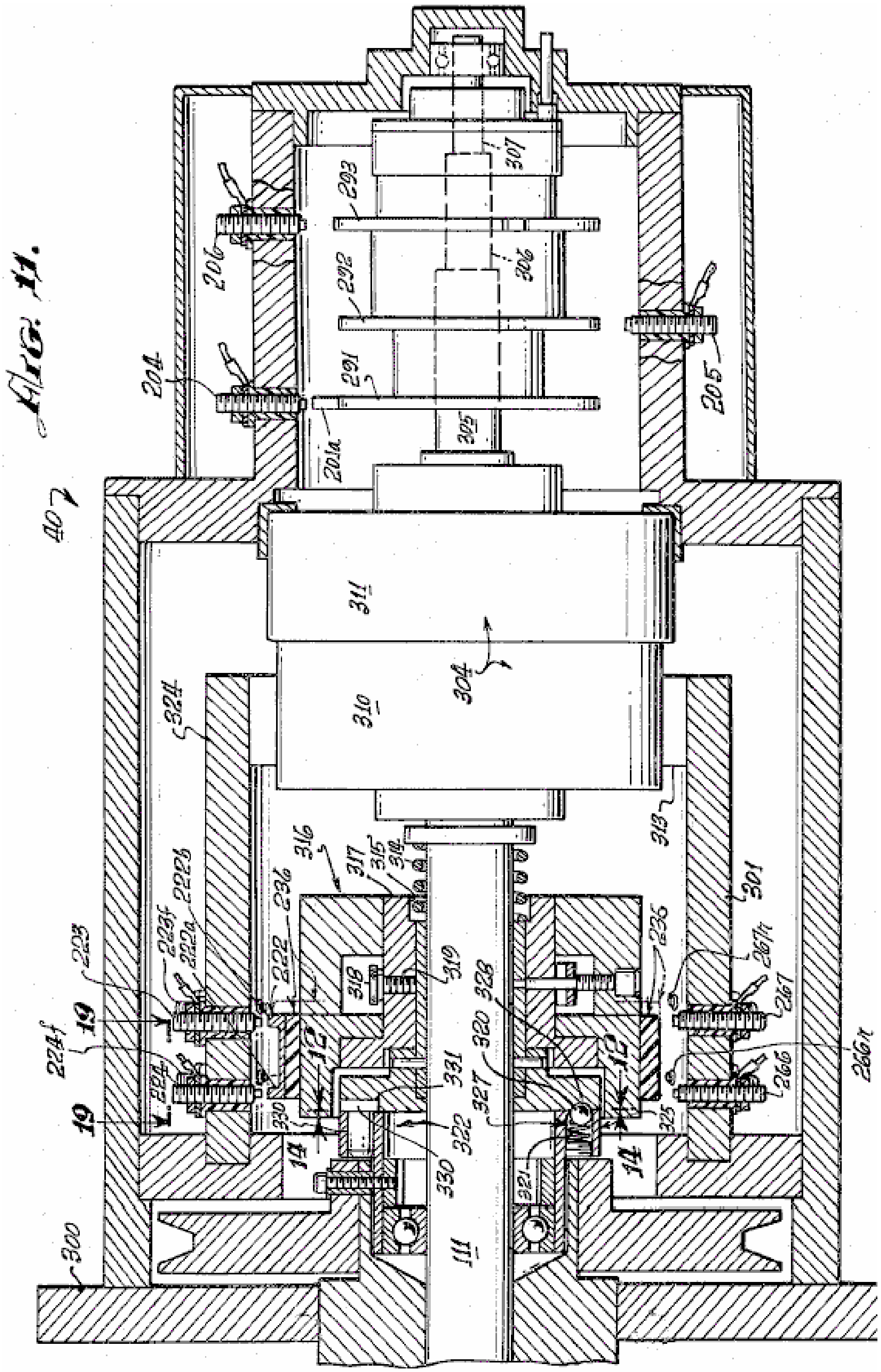

Fig.11 is a sectional view taken at line 11---11 in Fig.3, illustrating the control head or novel speed change controlling system of the engine.

Fig. 12.

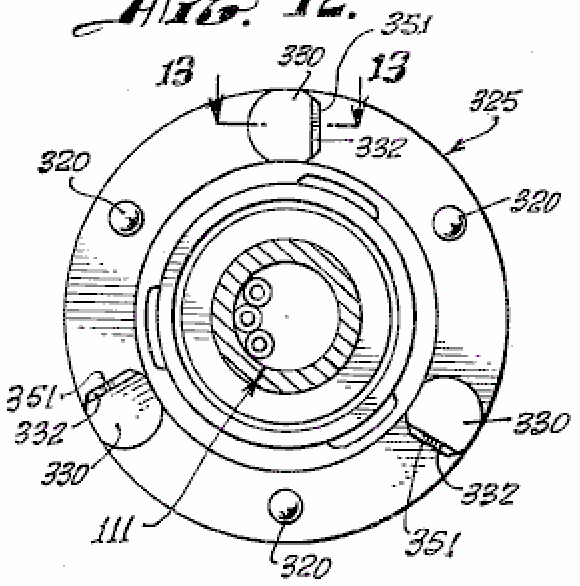

Fig.12 is a sectional view, taken at line 12---12 in Fig.11, showing a clutch plate utilised in the speed change control system of Fig.11

Fig. 13.

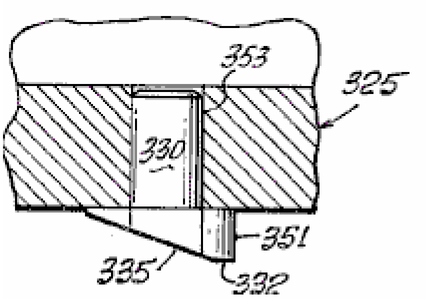

Fig.13 is a fragmentary view, taken at line 13---13 in Fig.12

Fig. 14.

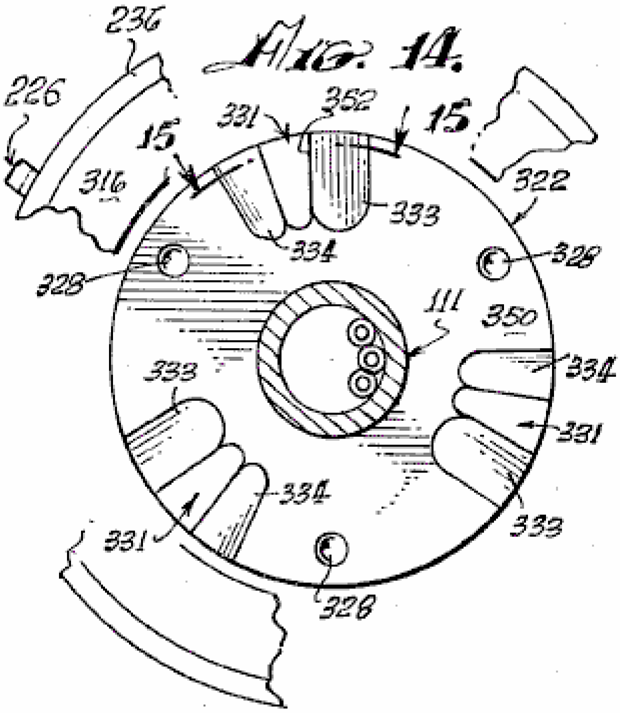

Fig.14 is a sectional view, taken at line 14---14 in Fig.11, showing a clutch plate which co-operates with the clutch plate of Fig.12

Fig. 15.

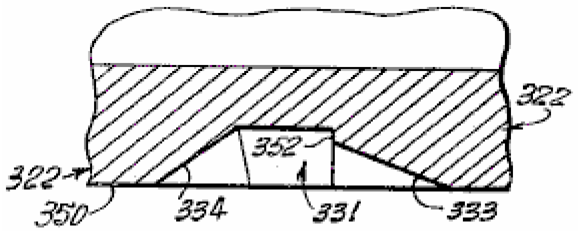

Fig.15 is a fragmentary sectional view taken at line 15---15 of Fig.13

Fig. 16.

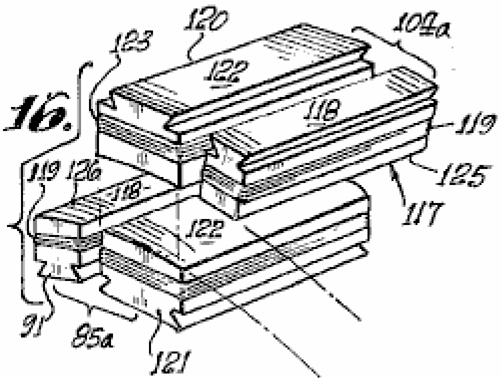

Fig.16 is a perspective view of electromagnets utilised in the present invention.

Fig. 17.

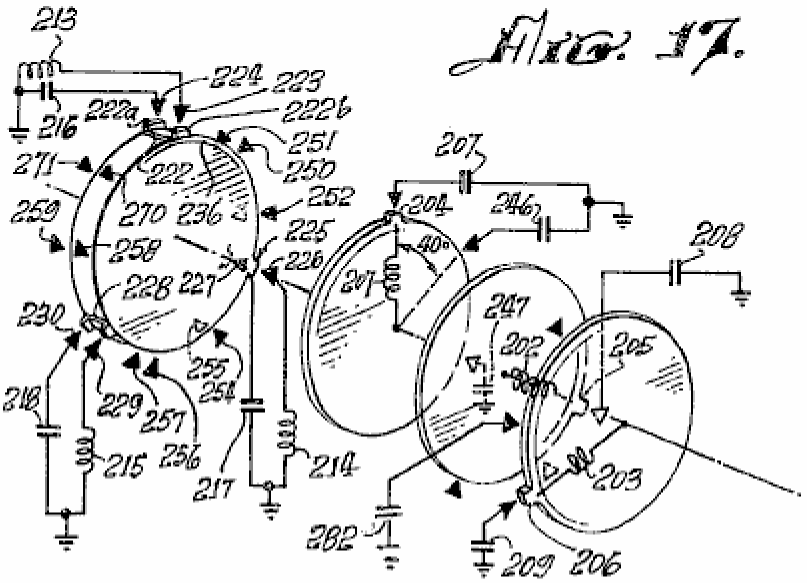

Fig.17 is a schematic diagram showing co-operating mechanical and electrical features of the programmer portion of the invention.

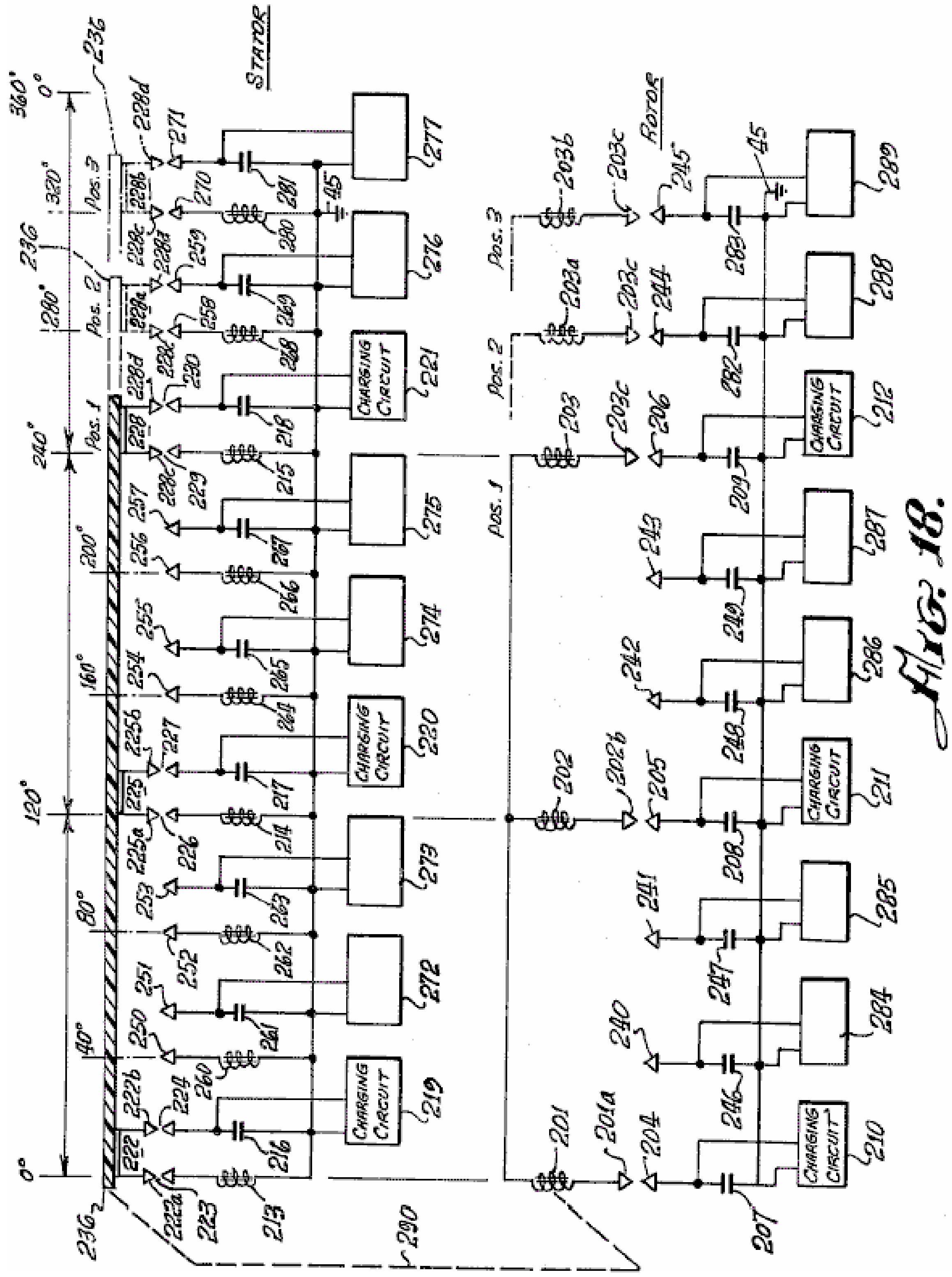

Fig.18 is an electrical schematic diagram of an engine according to the invention, showing the electrical relationships of the electromagnetic components embodying a new principle of the invention, and

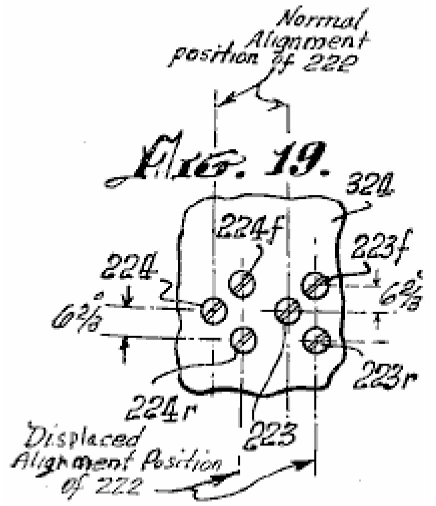

Fig.19 is a developed view, taken at line 19---19 of Fig.11, showing the locations of displaced spark gap elements of the speed changing mechanism of an engine according to the invention.

DESCRIPTION OF THE PREFERRED EMBODIMENT

As mentioned earlier, the basic principle of operation of the engine of the invention, is the discharge of a capacitor across a spark gap and through an inductor. When a pair of inductors is used, and the respective magnetic cores thereof are arranged opposite one another and arranged in opposing magnetic polarity, the discharge through them causes the cores to repel each other with considerable force.

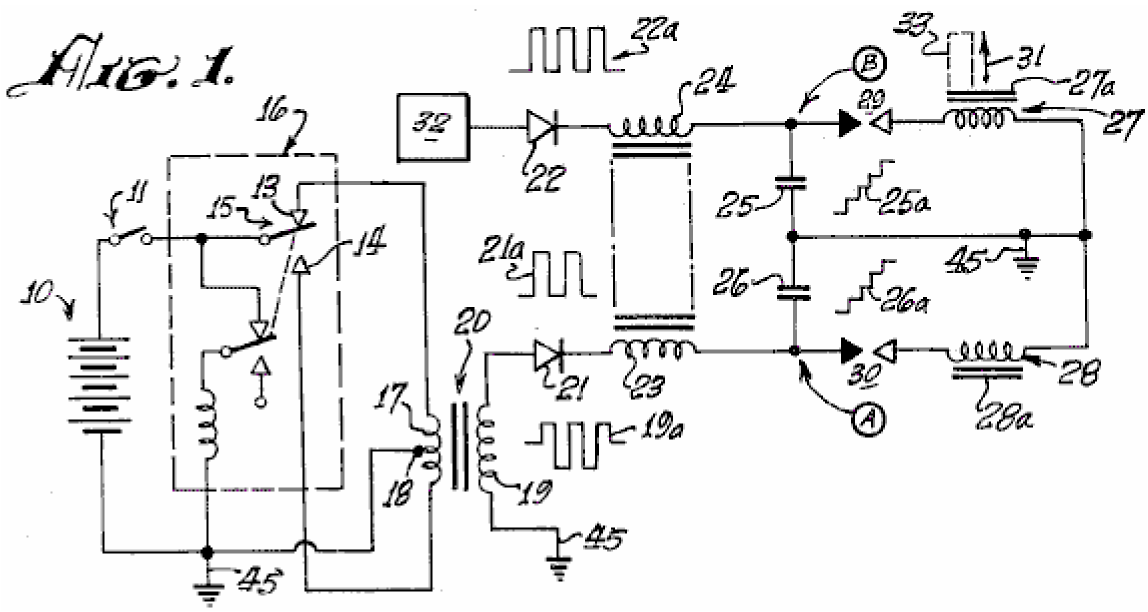

Referring to the electrical schematic diagram of **Fig.1**, a battery **10** energises a pulse-producing vibrator mechanism **16**, which may be of the magnetic type, incorporating an armature **15** moving between contacts **13** and **14**, or of the transistor type (not shown) with which a high frequency bipolar pulsed output is produced in primary **17** of transformer **20**. The pulse amplitude is stepped up in secondary **19** of transformer **20**. Wave form **19a** represents the bi-directional or bi-polar pulsed output. A diode rectifier **21** produces a unidirectional pulse train, as indicated at **21a**, to charge capacitor **26**. Successive unidirectional pulses of wave **21a** charge capacitor **26** to high level, as indicated at **26a**, until the voltage at point **A** rises high enough to cause a spark across the spark gap **30**. Capacitor **26** discharges via the spark gap, through the electromagnet coil **28**. A current pulse is produced which magnetises core **28a**. Simultaneously, another substantially identical charging system **32** produces a discharge through inductor **27** across spark gap **29**, to magnetise core **27a**. Cores **27a** and **28a** are wound with coils **27** and **28** respectively, so that their magnetic polarities are the same. As the cores **27a** and **28a** confront one another, they tend to fly apart when the discharge occurs through coils **27** and **28** because of repulsion of identical magnetic poles, as indicated by arrow **31.** If core **28a** is fixed or stationary, and core **27a** is moveable, then core **27a** may have tools **33** attached to it to perform work when the capacitor discharges.

Referring to **Fig.1** and **Fig.2**, a d-c electrical source or battery **10**, energises pulsators **36** (including at least two vibrators **16** as previously described) when switch 11 between the battery **10** and pulsator **36** is closed, to apply relatively high frequency pulses to the primaries of transformers **20**. The secondaries of transformers **20** are step-up windings which apply bipolar pulses, such as pulses **19a** (Fig.1) to the diodes in converter **38**. The rectified unidirectional pulsating output of each of the diodes in converter **38** is passed through delay coils **23** and **24**, thus forming a harness **37**, wound about the case of the engine, as herein after described, which is believed to provide a static floating flux field. The outputs from delay lines **37**, drive respective capacitors in banks **39**, to charge the capacitors therein, to a relatively high charge potential. A programmer and rotor and stator magnet control array **40**, **41**, **42**, is formed by spark gaps positioned, as hereinafter described, so that at predetermined positions of the rotor during rotation of the engine, as hereinafter described, selected capacitors of the capacitor banks **39** will discharge across the spark gaps through the rotor and stator electromagnets **43** and **44**. The converters **38**, programmer **40**, and controls **41** and **42**, form a series circuit path across the secondaries of transformers **20** to the ground, or point of reference potential, **45**. The capacitor banks **39** are discharged across the spark gaps of programmer **40** (the rotor and stator magnet controls **41** and **42**). The discharge occurs through the coils of stator and rotor electromagnets **43** and **44** to ground **45**. Stator and rotor electromagnets are similar to those shown at **27**, **27a**, **28** and **28a** in **Fig.1**.

The discharge through the coils of stator and rotor electromagnets **43** and **44** is accompanied by a discharge overshoot or return pulse, which is applied to a secondary battery **10a** to store this excess energy. The overshoot pulse returns to battery **10a** because, after discharge, the only path open to it is that to the battery **10a**, since the gaps in **40**, **41** and **42** have broken down, because the capacitors in banks **39** are discharged and have not yet recovered the high voltage charge from the high frequency pulsers **36** and the converter rectifier units **38**.

In the event of a misfire in the programmer control circuits **40**, **41** and **42**, the capacitors are discharged through a rotor safety discharge circuit **46** and returned to batteries **10-10a**, adding to their capacity. The circuit **46** is connected between the capacitor banks **39** and batteries **10**, **10a**.

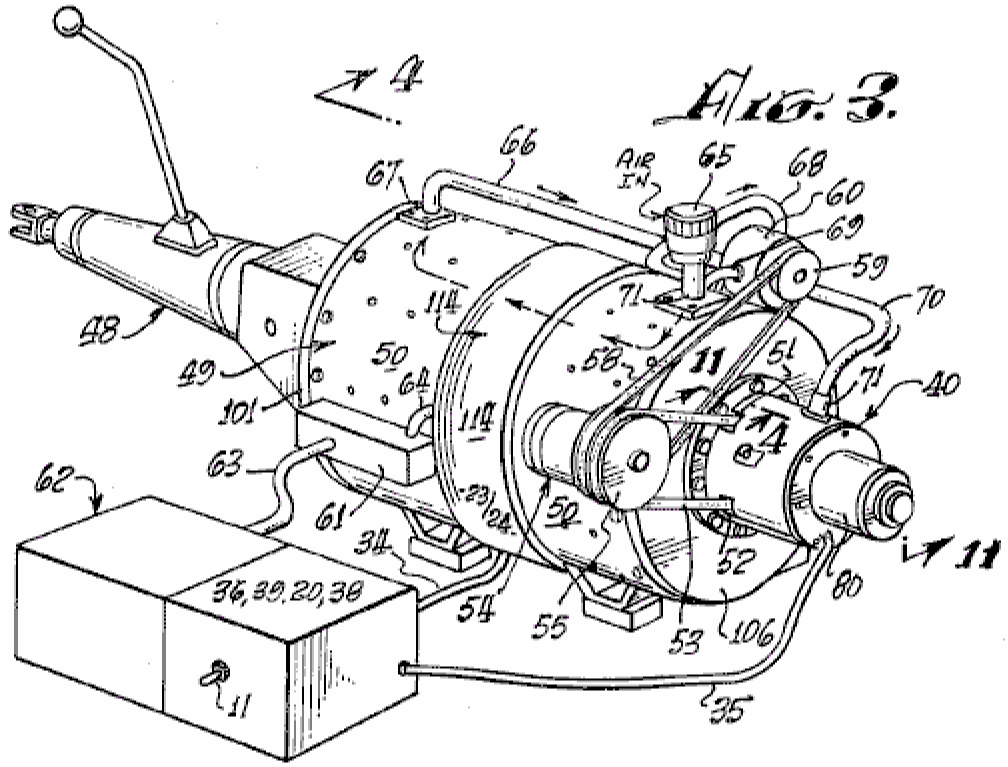

Fig. 3.

Referring to **Fig.3**, a motor or engine **49** according to the present invention is shown connected with an automotive transmission **48**. The transmission **48**, represents one of many forms of loads to which the engine may be applied. A motor housing **50**, encases the operating mechanism hereinafter described. The programmer 40 is axially mounted at one end of the housing. Through apertures **51** and **52**, a belt **53** couples to a pulley **57** (not shown in this view) and to an alternator **54** attached to housing **50**. A pulley **55** on the alternator, has two grooves, one for belt **53** to the drive pulley **58** on the shaft (not shown) of the engine **49**, and the other for a belt **58** coupled to a pulley **59** on a pump **60** attached to housing **50**, A terminal box **61** on the housing, interconnects between the battery assembly **62** and motor **49** via cables **63** and **64**.

An intake **65** for air, is coupled to pump **60** via piping **68** and **69** and from pump **60** via tubing or piping **66** and **70** to the interior of housing **50** via coupling flanges **67** and **71**. The air flow tends to cool the engine and the air may preferably be maintained at a constant temperature and humidity so that a constant spark gap discharge condition is maintained. A clutch mechanism **80** is provided on programmer **40**.

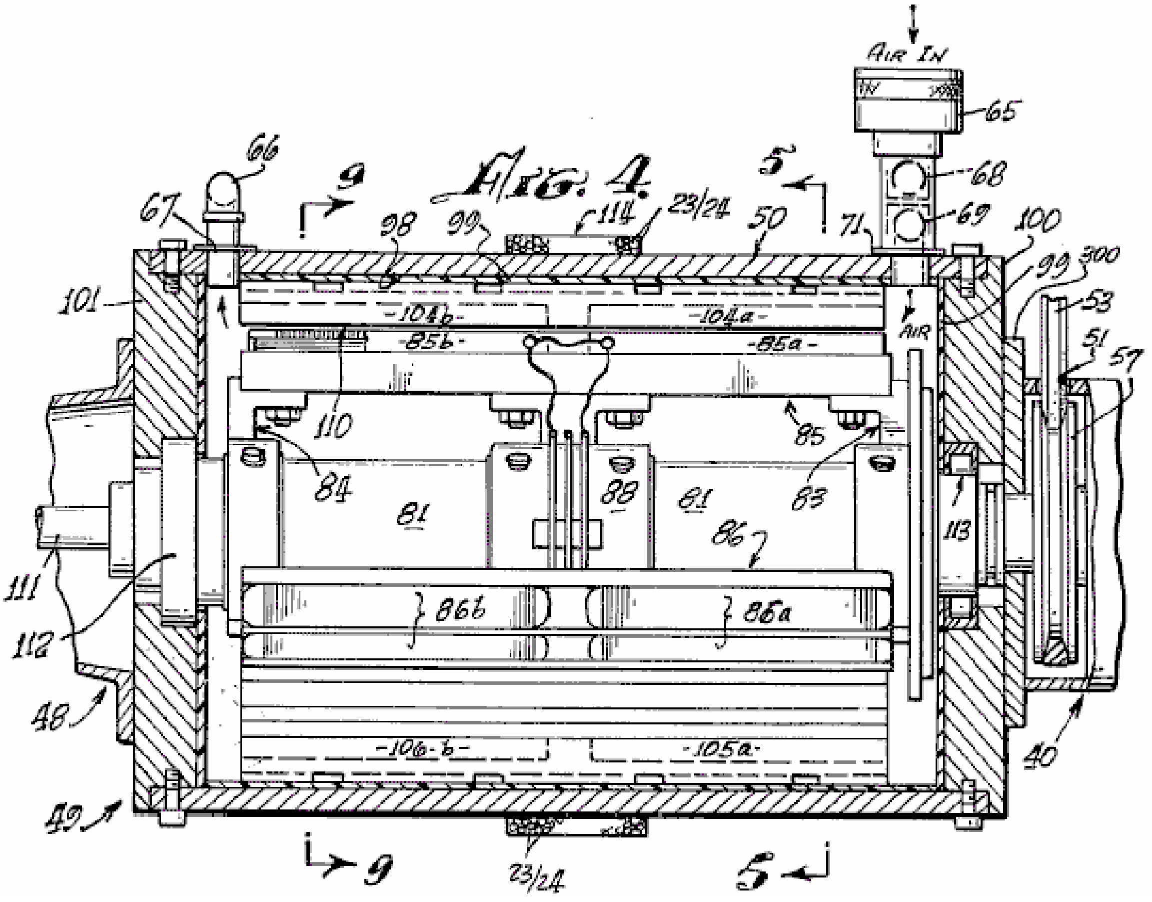
Fig. 4.

Referring to **Fig.4**, **Fig.5** and **Fig.9**, rotor **81** has spider assemblies **83** and **84** with three electromagnet coil assembly sets mounted thereon, two of which are shown in **Fig.4**, on **85**, at **85a** and **85b** and on **86** at **86a** and **86b**. One of the third electromagnet coil assemblies, designated **87a**, is shown in **Fig.5**, viewed from the shaft end. As more clearly shown in the perspective view of **Fig.8**, a third spider assembly **88** provides added rigidity and a central support for the rotor mechanism on shaft **81**.

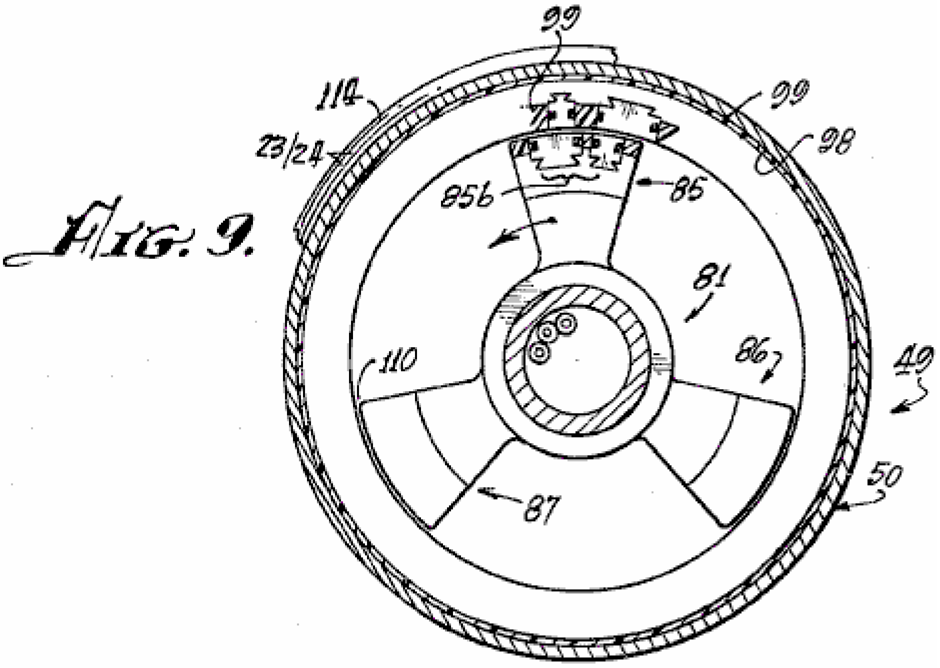
Fig. 9.

The electromagnet sets **85a**, **85b**, **86a**, **86b**, **87a** and **87b**, disposed on rotor **81** and spiders **83**, **84** and **88**, each comprise pairs of front units **85a**, **86a** and **87a** and pairs of rear units **85b**, **86b** and **87b**. Each pair consists of a major electromagnet and a minor electromagnet, as hereinafter described, which are imbedded in an insulating material **90**, which insulates the electromagnet coil assemblies from one another and secures the electromagnets rigidly in place on the spider/rotor cage **81**, **83**, **84** and **88**.

The interior wall **98**, of housing **50**, is coated with an electrically insulating material **99** in which are imbedded electromagnet coils, as hereinafter described, and the interiors of end plates **100** and **101** of the housing **50**. On the insulating surface 98 of housing **50** is mounted a series of stator electromagnet pairs **104a**, identical with electromagnet pairs **85a**, **86a**, **87a**, etc. Electromagnet pairs such as **104a** or **105a** are disposed every **40** degrees about the interior of housing **50** to form a stator which co-operates with the rotor **81-88**. An air gap **110** of very close tolerance is defined between the rotor and stator electromagnets and air from pump **65** flows through this gap.

As shown in **Fig.8**, the electromagnet assemblies, such as **85** through **87**, of the rotor and magnet assemblies, such as **104a** in the stator, are so embedded in their respective insulating plastic carriers (rotor and stator) that they are smoothly rounded in a concave contour on the rotor to permit smooth and continuous rotation of rotor **81** in stator housing **50**. The air gap **110** is uniform at all positions of any rotor element within the stator assembly, as is clearly shown in **Fig.16**.

Fig. 16.

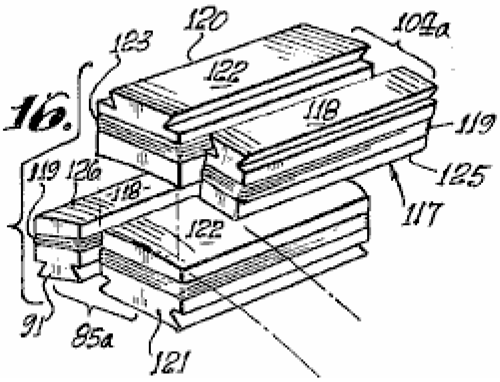

The rotor **81** and spiders **83**, **84** and **88** are rigidly mounted on shaft **111** journaled in bearing assemblies **112** and **113** which are of conventional type, for easy rotation of the rotor shaft **111** within housing **50**.

Around the central outer surface of housing **50**, are wound a number of turns of wire **23** and **24** to provide a static flux coil **114** which is a delay line, as previously described. **Figs. 5, 6, 7** and **9** are cross-sectional views of the rotor assembly **81-88**, arranged to show the positioning and alignment of the rotor and stator electromagnet coil assemblies at successive stages of the rotation of the rotor **81-88** through a portion of a cycle of operation thereof. For example, in **Fig.5** the rotor assembly **81-88** is shown so positioned that a minor rotor electromagnet assembly **91** is aligned with a minor stator electromagnet assembly **117**.

As shown in further detail in **Fig.16**, minor electromagnet assembly **117** consists of an iron core **118**, grooved so that a coil of wire **119** may be wound around it. Core **118** is the same in stator electromagnet **117** as it is in rotor electromagnet **91**.

As a position 13.33 degrees to the right of rotor electromagnet **91**, as viewed in **Fig.5** and **Fig.16**, there is a second or major rotor electromagnet **121** which has a winding **123** about its core **122**. The electromagnets **91** and **121** are the pair **85a** of **Fig.4** and **Fig.8**.

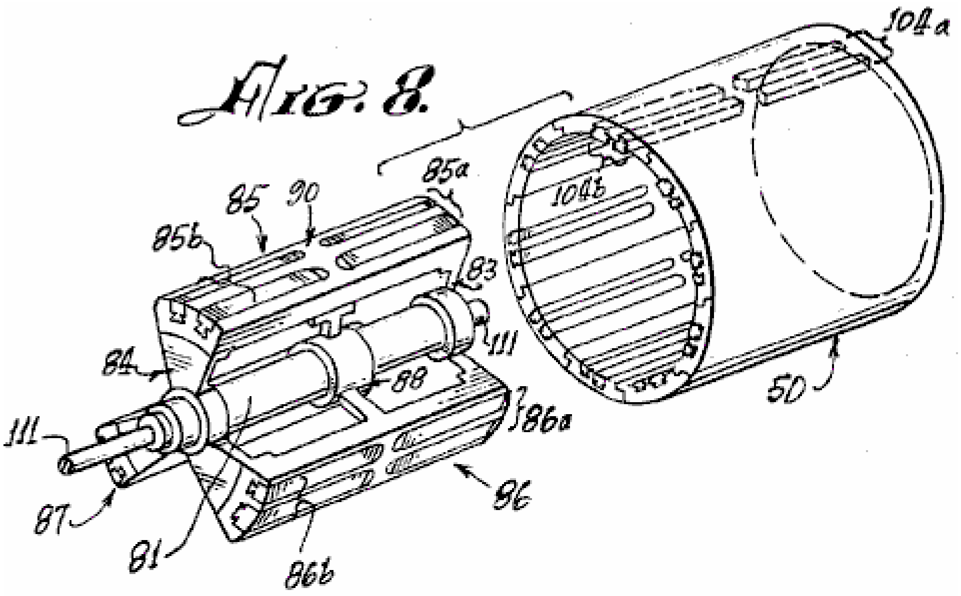

Fig. 8.

At a position 13.33 degrees to the left of stator electromagnet **117**, as viewed in **Fig.5**, there is a second or major stator electromagnet **120** whose core **122** is of the same configuration as core **122** of rotor electromagnet **121**. A winding **123** about core **122** of electromagnet **120** is of the same character as winding **123** on electromagnet **121**.

Electromagnet assembly pair **85a** on the rotor is identical in configuration to that of the electromagnet stator assembly pair **104a** except for the position reversal of the elements **117-120** and **91-121** of the respective pairs.

There are none pairs of electromagnets **120-117** (**104a**) located at 40 degree intervals about the interior of housing **50**. The centreline of core **122** of electromagnet **120** is positioned 13.33 degrees to the left of the centreline of the core **118** of electromagnet **117**. Three pairs of electromagnets **85a**, **86a** and **87a** are provided on rotor assembly **81-88** as shown in **Fig.5**.

Other combinations are possible, but the number of electromagnets in the rotor should always be in integral fraction of the number of electromagnets in the stator. As shown in **Fig.8**, for the rotor assembly **85a** and **85b**, there are three of each of the front and back pairs of electromagnetic assemblies. Similarly, as shown in **Fig.4** and **Fig.8**, there are nine front and back pairs of electromagnets in the stator such as **104a** and **104b**.

In order to best understand the operation of the rotor **81-88** rotating within the stator housing **50** of an engine according to this invention, the positions of rotor electromagnets **91** and stator electromagnets **117** are initially exactly in line at the 13.33 degree peripheral starting position marked on the vertical centreline of **Fig.5**. The winding direction of the coils of these magnets is such that a d-c current through the coils **119** will produce a particular identical magnet polarity on each of the juxtaposed surfaces **125** of magnet **117** and **126** of magnet **91** (**Fig.5**). **Fig.16** and **Fig.6** illustrate the next step in the motion wherein the two major electromagnets, **120** in the stator and **121** in the rotor, are in alignment.

When the d-c discharges from the appropriate capacitors in banks **39** occur simultaneously across spark gaps through the coils **119** of electromagnets **117** and **91**, at the instant of their alignment, their cores **118**, will repel one another to cause rotor assembly **81-88** to rotate clockwise in the direction indicated by arrow **127**. The system does not move in the reverse direction because it has been started in the clockwise direction by the alternator motor **54** shown in **Fig.3**, or by some other starter means. If started counterclockwise, the motor will continue to rotate counterclockwise.

As noted earlier, the discharge of any capacitor occurs over a very short interval via its associated spark gap and the resulting magnetic repulsion action imparts motion to the rotor. The discharge event occurs when electromagnets **117** and **91** are in alignment. As shown in **Fig.5**, rotor electromagnet **91a** is aligned with stator electromagnet **117c**, and rotor electromagnet **91b** is aligned with stator electromagnet **117e** at the same time that similar electromagnets **117** and **91** are aligned. A discharge occurs through all six of these electromagnets simultaneously (that is, **117**, **91**, **117c**, **91a**, **117e** and **91b**). A capacitor and a spark gap are required for each coil of each electromagnet. Where, as in the assembly shown in **Fig.8**, front and back pairs are used, both the axial in-line front and back coils are energised simultaneously by the discharge from a single capacitor or from a bank of paralleled capacitors such as **25** and **26** (**Fig.1**). Although **Fig.4** and **Fig.8** indicate the use of front and back electromagnets, it should be evident that only a single electromagnet in any stator position and a corresponding single electromagnet in the rotor position, may be utilised to accomplish the repulsion action of the rotor with respect to the stator. As stated, each electromagnet requires a discharge from a single capacitor or capacitor bank across a spark gap for it to be energised, and the magnetic polarity of the juxtaposed magnetic core faces must be the same, in order to effect the repulsive action required to produce the rotary motion.

Referring to **Fig.5** and **Fig.6**, the repulsion action causes the rotor to move 13.33 degrees clockwise, while electromagnets **91**, **91a** and **91b** move away from electromagnets **117**, **117c** and **117e** to bring electromagnets **121**, **121a** and **121b** into respective alignment with electromagnets **120a**, **120d** and **120f**. At this time, a capacitor discharge across a spark-gap into their coils **123** occurs, thus moving the rotor. Another 13.33 degrees ahead, as shown in **Fig.7**, major electromagnets 121, 121a and 121b come into alignment with minor electromagnets **117a**, **117d** and **117f**, at which time a discharge occurs to repeat the repulsion action, this action continuing as long as d-c power is applied to the system to charge the capacitor banks.

Fig.18 further illustrates the sequencing of the capacitor discharges across appropriate spark gap terminal pairs. Nine single stator coils and three single rotor coils are shown with their respective interconnections with the spark gaps and capacitors with which they are associated for discharge. When the appropriate spark gap terminals are aligned, at the points in the positioning of the rotor assembly for most effective repulsion action of juxtaposed electromagnet cores, the discharge of the appropriate charged capacitors across the associated spark gap occurs through the respective coils. The capacitors are discharged is sets of three, through sets of three coils at each discharge position, as the rotor moves through the rotor positions. In **Fig.18**, the rotor electromagnets are positioned linearly, rather than on a circular base, to show the electrical action of an electric engine according to the invention. These motor electromagnets **201**, **202** and **203** are aligned with stator electromagnets **213**, **214** and **215** at 0 degrees, 120 degrees and 240 degrees respectively. The stator electromagnets are correspondingly shown in a linear schematic as if rolled out of the stator assembly and laid side by side. For clarity of description, the capacitors associated with the rotor operation **207**, **208**, **209** and **246**, **247**, **248**, **249**, **282** and **283**, are arranged in vertical alignment with the respective positions of the rotor coils **201**, **202** and **203** as they move from left to right, this corresponding to clockwise rotation of the rotor. The stator coils **213, 214, 215, 260, 261, 262, 263, 264, 265, 266,** etc. and capacitor combinations are arranged side by side, again to facilitate description.

An insulative disc **236** (shown in **Fig.17** as a disc but opened out linearly in **Fig.18**) has mounted thereon, three gap terminal blocks **222**, **225** and **228**. Each block is rectangularly U-shaped, and each interconnects two terminals with the base of the U. Block **222** has terminals **222a** and **222b**. Block **225** has terminals **225a** and **225b**. Block **228** has terminals **228c** and **228d**. When insulative disc **230** is part of the rotor as indicated by mechanical linkage **290**, it can be seen that terminal U **222** creates a pair of gaps with gap terminals **223** and **224** respectively. Thus, when the voltage on capacitor **216** from charging unit **219**, is of a value which will arc over the air spaces between **222a** and **223**, and between **222b** and **224**, the capacitor **216** will discharge through the coil of electromagnet **213** to ground. Similarly, gap terminal U 225 forms a dual spark gap with gap terminals **226** and **227** to result in arc-over when the voltage on capacitor **217**, charged by charging circuit **220**, discharges into the coil of electromagnet **214**. Also, U-gap terminal **228** with terminals **228c** and **228d**, creates a spark gap with terminals **229** and **230** to discharge capacitor **218**, charged by charging circuit **221**, into coil **215**. At the same time, rotor coils, **201**, **202** and **203** across gaps **201a - 204**, **202b - 205** and **203c - 206** each receives a discharge from respective capacitors **207**, **208** and **209**.

When the electromagnet coils **213**, **214** and **215** and **201**, **202** and **203** are energised, the repulsion action causes the rotor assembly to move to position 2 where a new simultaneous group of discharges occurs into rotor coils **201**, **202** and **203** from capacitors **246**, **248** and **282** across gaps **201a - 240**, **202b - 242** and **203c - 244**. Simultaneously, because gap-U-elements **222**, **225** and **228** have also moved to position 2 with the rotor assembly, capacitor **261** is discharged through electromagnet coil **260**, capacitor **265** is discharged through electromagnet coil **264**, and capacitor **269** is discharged through electromagnet coil **268** in alignment with position 2 of the rotor electromagnet coils, thus to cause the rotor electromagnets to move to position 3 where the discharge pattern is repeated now with capacitors **247**, **249** and **283** discharging through the rotor electromagnet coils **201**, **202** and **203**, and the capacitors **263**, **267** and **281** discharging respectively through stator electromagnet coils **262**, **266** and **280**.

After each discharge, the charging circuits **219 - 221** and **272 - 277** for the stator capacitors, and **210 - 212** and **284 - 289** for the rotor capacitors, are operated continuously from a battery source as described earlier with reference to **Fig.1**, to constantly recharge the capacitors to which each is connected. Those versed in the art will appreciate that, as each capacitor discharges across an associated spark gap, the resulting drop in potential across the gap renders the gap an open circuit until such time as the capacitor can recharge to the arc-over level for the gap. This recharge occurs before a rotor element arrives at the next position in the rotation.

The mechanical schematic diagram of **Fig.17**, further clarifies the operation of the spark-gap discharge programming system. A forward disc **236** of an electrically insulative material, has thereon the set of U-shaped gap terminal connectors previously described. These are positioned at 0 degrees, 120 degrees and 240 degrees respectively. In **Fig.17**, schematic representations of the position of the coil and capacitor arrangements at the start of a cycle are shown to correspond to the above description with reference to **Fig.18**. Accordingly, the coil and capacitor combinations **213/216, 214/217** and **215/218** are shown connected with their gap terminals, respectively, **223/224, 226/227** and **229/230**. On the rotor coil and capacitor connection, three separate discs **291, 292** and **293** are shown, each with a single gap terminal. The discs **291 - 293** are rotated so as to position their respective gap terminals 201a, 201b and 201c, at 120 degree increments, with the 0 degrees position corresponding to the 0 degrees position of U-gap terminal **222** on disc **230**.

Representative gap terminals are shown about the peripheries of discs **230, 291 - 293** to indicate clearly how, as the discs turn in unison, the gap alignments correspond so that three rotor coils always line up with three stator coils at 120 degree intervals about the rotary path, producing an alignment every 40 degrees, there being nine stator coils. Thus, there are three simultaneous discharges into stator coils and three into rotor coils at each 40 degree position. Nine positions displaced 40 degrees apart provide a total of 27 discharge points for capacitors into the rotor coils and 27 discharge points for capacitors into the stator coils in one revolution of the rotor.

It will be understood that, as illustrated in **Fig.17** and **Fig.18**, nine individual electromagnet coils are shown in the stator and three in the rotor, in order to show in its simplest form, how the three rotor electromagnets are stepped forward from alignment with three of the stator electromagnets, when the appropriate spark gaps are in alignment, to effect the discharge of capacitors through juxtaposed pairs of rotor/stator electromagnets. The repulsion moves the rotor electromagnet from the stator electromagnet to the next alignment position 40 degrees further on. In the interval, until another rotor electromagnet, 120 degrees removed, is aligned with the stator electromagnet which had just been pulsed, the associated capacitor is recharged. Thus, the rotor moves from one position to the next, with capacitor discharges occurring each 40 degrees of rotation, a total of nine per revolution. It should be obvious that, with other rotor/stator combinations, the number of electromagnet coincidences and spark-gap discharges will vary. For example, with the coil pairs shown in **Figs 4 through 8**, a total of 27 discharges will occur. Although there are 18 stator electromagnets and 3 rotor electromagnets, the discharge pattern is determined by the specific spark gap arrangement.

The rotor/stator configuration of **Fig.5** and **Fig.8**, involving the major and minor pairs of electromagnets, such as **85a** and **104a** (the terms “minor” and “major” referring to the difference in size of the elements), include nine pairs of electromagnets in the stator, such as **104a**, with three electromagnet pairs of the rotor, such as **85a**. Because of the 13.33 degree separation between the major and minor electromagnets in the rotor pair **85a**, with the same separation of minor and major electromagnets of the stator pair **104a**, the sequence of rotation and discharge described above, with respect to the illustrative example of **Fig.5**, involves the following:

1. A minor element **117** of stator pair **104a** is aligned with the minor element **91** of rotor pair **85a**. On the discharge, this moves the rotor ahead 13.33 degrees.
2. the major rotor element **122** of the pair **85a**, now is aligned with the major stator element **120b** of the next stator electromagnet pair, in the stator array as shown in **Fig.6**. On the discharge, the rotor moves ahead 13.33 degrees.
3. This brings the minor rotor electromagnet **91** into alignment with the major stator electromagnet **120b** of pair **104d**, and the major electromagnet **122** (just discharged) of pair **85a** into alignment with minor electromagnet **117b** of pair **104d**, and the rotor spark gap elements into alignment with a different position of gap elements connected with capacitors not discharged in the previous position of the rotor. It should be remembered at this point that it is the positioning of a rotatable spark gap array, similar to that illustrated in **Fig.17** and **Fig.18**, which controls the time of discharge of capacitors connected to these gap terminals. Therefore, any electromagnet can be energised twice, successively, from separate capacitors as the rotor brings appropriate gap terminals into alignment with the coil terminals of a particular electromagnet.

Thus, although major electromagnet **120b** of pair **104d** has just been energised as described above, it can now be energised again along with minor rotor electromagnet **91** in step 3, because the rotor moved to a new set of terminals of the spark gap arrays connected to capacitors which have not yet been discharged. These capacitors now discharge through rotor electromagnet **91** and stator electromagnet **120b**, causing the rotor to move ahead another 13.33 degrees, thus again aligning two minor electromagnets again, these being **117b** of stator pair **104d** and **91** of rotor pair **85a**. The rotor has now moved 40 degrees since step 1 above. The sequence is now repeated indefinitely. It is to be noted that at each 13.33 degree step, the discharges drive the rotor another 13.33 degrees. There are 27 steps per revolution with nine stator coil pairs. The discharge sequence is not uniform, as is shown in Table 1. In the stator, three major electromagnets 120 degrees apart are energised twice in sequence, followed by a hiatus of one step while three minor electromagnets of the stator, 120 degrees apart, are energised during the hiatus. In the rotor the major electromagnets are energised during a hiatus step following two minor electromagnet energisation steps. A total of 27 energisations are this accomplished in the nine pairs of coils of the stator.

In Table 1, the leftmost column shows the location of each rotor arm **85, 86** and **87** at an arbitrarily selected step No. 1 position. For example, in step 1, rotor arm **85** has a minor stator and minor rotor electromagnet in alignment for capacitors to discharge through them simultaneously at the 13.33 degree position.

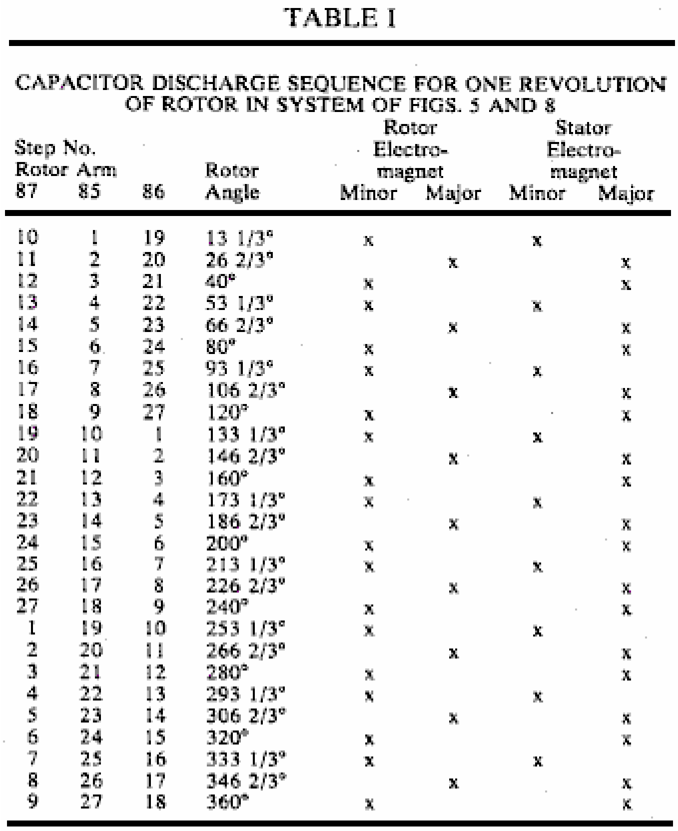

TABLE I

CAPACITOR DISCHARGE SEQUENCE FOR ONE REVOLUTION OF ROTOR IN SYSTEM OF FIGS. 5 AND 8

Step No. Rotor Arm 87	85	86	Rotor Angle	Rotor Electro-magnet Minor	Rotor Electro-magnet Major	Stator Electro-magnet Minor	Stator Electro-magnet Major
10	1	19	13 1/3°	x		x	
11	2	20	26 2/3°		x		x
12	3	21	40°	x			x
13	4	22	53 1/3°	x		x	
14	5	23	66 2/3°		x		x
15	6	24	80°	x			x
16	7	25	93 1/3°	x		x	
17	8	26	106 2/3°		x		x
18	9	27	120°	x			x
19	10	1	133 1/3°	x		x	
20	11	2	146 2/3°		x		x
21	12	3	160°	x			x
22	13	4	173 1/3°	x		x	
23	14	5	186 2/3°		x		x
24	15	6	200°	x			x
25	16	7	213 1/3°	x		x	
26	17	8	226 2/3°		x		x
27	18	9	240°	x			x
1	19	10	253 1/3°	x		x	
2	20	11	266 2/3°		x		x
3	21	12	280°	x			x
4	22	13	293 1/3°	x		x	
5	23	14	306 2/3°		x		x
6	24	15	320°	x			x
7	25	16	333 1/3°	x		x	
8	26	17	346 2/3°		x		x
9	27	18	360°	x			x

Similarly, in step 1, rotor arm **86** is at the 133.33 degree position which has two minor electromagnets in alignment, ready for discharge. Simultaneously, rotor arm 87 is at the 253.33 degree position with two minor electromagnets aligned for capacitor discharge. The other steps of the sequence are apparent from Table 1, for each position of the three rotor arms at any step and the juxtapositions of respective stator and rotor electromagnet elements at that position.

In the simplified motor arrangement shown in schematic form in **Fig.18**, with single electromagnet configuration, the alignment is uniform and the discharge sequences follow sequentially.

As mentioned before, a change in speed is effected by displacing the stator spark gap terminals on the rotor (shown at **236** in **Fig.17** and **Fig.18**) either counterclockwise or clockwise 6.66 degrees so that the discharge position of the stator electromagnets is displaced. Referring to **Figs. 11 to 15**, the simultaneous discharge of selected capacitors into the displaced electromagnets results in a deceleration if the rotor electromagnet is approaching the stator electromagnet at the time of discharge, or an acceleration if the rotor electromagnet is leaving the stator electromagnet at the time of the discharge pulse. In each event, there is a repulsive reaction between the stator and rotor electromagnets which effects this change in speed.

Referring to **Fig.11**, clutch mechanism **304** about shaft **111** is operated electromagnetically in conventional manner, to displace the spark-gap mechanism **236** which is operated normally in appropriate matching alignment with the rotor spark-gap discs **291, 292** and **293**. Clutch **304** has a fixed drive element **311**, containing an electromagnetic drive coil (not shown) and a motor element **310** which, when the electromagnetic drive coil is energised, can be operated by a direct current. The operation of motor element 310, brings into operation, spark gap elements **224r, 223r** or **223f, 224f** of the system shown in **Figs. 4, 5 and 8,** as illustrated in **Fig.19**.

The fixed stator coil spark gap terminal pairs **223, 224** and **266, 267** are arrayed about a cylindrical frame **322** which is fabricated in insulative material. In the illustrative example of **Fig.17** and **Fig.18**, there are nine such spark gap terminal pairs positioned around the periphery of the cylinder frame **324**. In the engine of **Figs. 4 to 8**, a total of 27 such spark gap pairs are involved. In addition, although not shown in the drawing, there are also pairs of terminals, such as **223r or 223f**, **224r or 224f** and **226r or 226f**, **267r or 267f**, displaced 6.66 degrees on either side of the pairs **223, 224** or **266, 267** and all other pairs in the spark gap array, the letters “r” and “f” denoting “retard” or “faster”. The latter displaced pairs are used in controlling the speed of the engine rotor. The displaced pairs not shown are involved in the operation of the clutch **304**, the speed-changing control element.

Clutch **304** is associated with shaft **111** in that the movable element **310** draws clutch disc element **316** on shaft **111**, away from clutch disc element **322** when energised by a voltage of appropriate polarity applied to its motor electromagnet **311**. Such clutch drives are well known in the art.

The clutch mechanism **304** of **Fig.11** and **Fig.19**, when not energised, is in the configuration shown in **Fig.11**. The energised configuration of clutch **304** is not specifically illustrated. Upon energisation, spark-gap element **222** on disc **236** is displaced rightward, as viewed in **Fig.11**, by broken lines **236X**, into alignment with the positions of fixed spark-gap terminals **223f, 224f** and **267r, 266r**. When the disc is in position **236X**, the flattened edge **332** of pin **330** in disc **325** rides on surface **350** of disc **322**. Normally, the flattened edges **351** of pins **330** are engaged against the flat edge **352** in recess **331** of disc **322**. The displacement of disc **322** on shaft **111** is effected by the action of clutch **304** against spring **314** (Fig.11). An electric switch (not shown) of clutch mechanism **304** energises it from a d-c power source, and has two positions, one for deceleration and one for acceleration. In either position, clutch **304** is engaged to pull clutch disc **322** from clutch disc **325**, momentarily. For the decelerate or the accelerate position, the displaced alignment of spark gap elements **222** is with the **224f, 223f** and the **224r, 223r** spark-gap terminal elements. However, only the **224f, 223f** spark-gap elements are switched into operation with appropriate capacitors for the accelerate position, while in the decelerate position, only the **223r and 224r** spark-gap elements are switched into the circuit with their associated capacitors.

Of course, when insulative disc **236** is displaced by clutch **304**, its gap terminals **222, 225** and **228** (**Fig.14** and **Fig.18**) are all displaced into the alignment position of **236X** so as to engage the “r” and “f” lines of fixed spark gap elements. Although the accelerate and decelerate positions of disc **236** are the same, it is the switching into operation of the **223, 224** or **266, 267** exemplary “r” or “f” pairs of terminals which determines whether the rotor will speed up or slow down.

The momentary displacement of clutch disc **322** from clutch disc **325** results in rotation of disc **325** about disc **322** through an angle of 120 degrees. The detent ball and spring mechanism **320, 321** in disc **325**, positions itself between one detent dimple **328** and a succeeding one **328** at a position 120 degrees away on disc **325**.

As stated, flat **332** of pin **330** rides on surface **350** of disc **322**, and pin **330** leaves the pin-holding groove **331/352** along ramp **333** in disc **322** during the momentary lifting of disc **322** by clutch **304**. Pin **330** falls back into the next groove **331** at a point 120 degrees further on about disc **322**. Pin **330** falls into place in groove **331** on ramp **334**. Pins **330** are rotatable in their sockets **353**, so that for either clockwise or counterclockwise rotation, the flat **351** will engage the flat **352** by the particular ramp it encounters.

The deceleration or acceleration due to the action of clutch **304** thus occurs within a 120 degree interval of rotation of disc **325**. During this interval, disc **322** may only move a fraction of this arc.

There has been described earlier, an electromotive engine system wherein at least one electromagnet is in a fixed position and a second electromagnet of similar configuration is juxtaposed with it in a magnetic polarity relationship such that, when the cores of the electromagnets are energised, the juxtaposed core faces repel each other. One core being fixed, and the second core being free to move, any attachments to the second electromagnet core will move with it. Hence, if a plurality of fixed cores are positioned about a circular confining housing, and, within the housing, cores on a shaft are free to move, the shaft is urged rotationally each time the juxtaposed fixed and rotatable cores are in alignment and energised. Both the fixed and the movable cores are connected to spark gap terminal elements and the associated other terminal elements of the spark gaps are connected to capacitors which are charged to high voltage from pulsed unipolar signal generators. These capacitors are discharged through the electromagnets across the spark gaps. By switching selected groups of capacitors into selected pairs of spark gap elements for discharge through the electromagnets, the rotor of the circular array systems is accelerated and decelerated.

By confining a fixed electromagnet array in a linear configuration, with a linearly movable electromagnet to which a working tool is attached, exciting the juxtaposed pairs of electromagnets by capacitor discharge, results in the generation of linear force for such tools as punch presses, or for discharging projectiles with considerable energy.

CLAIMS:

1. An electric engine comprising:

A housing;

An array of electromagnets uniformly spaced in said housing to form a stator;

A rotor cage on a shaft journaled in and rotatable within said stator, said rotor cage having thereon a spaced array of electromagnets similar to said stator electromagnets and in number, comprising an integral fraction of the number of electromagnets in said stator array;

Each of the electromagnets of said stator and of said rotor, having a core which can be magnetised and of a particular configuration and each being wound with a coil such that a pulses of unidirectional electric current through said coil, magnetises the respective core thereof to a particular magnetic polarity, and the faces of rotor cores juxtaposing selected stator cores are magnetised to the same polarity, the juxtaposed cores thereby tending to repel one another, one lead of each of the stator and rotor coils being connected to a common terminal, the other lead of each of said coils being connected to a gap terminal, the gap terminals of said rotor coils being on the rotor and equal in number to the number of coils thereon and matching the positions of said rotor electromagnets thereon, the gap terminals of said stator being equal in number to the number of coils on the stator and disposed uniformly about said stator to match the positions of said stator electromagnets within said housing;

A first array of capacitors, each having a terminal in common with the common coil terminal of said stator electromagnets, and each capacitor having its other terminal connected to a gap terminal arrayed adjacent the gap terminal of an electromagnet associated therewith;

A second array of capacitors, each having a terminal in common with said common terminal of said rotor electromagnet coils but equal in number to the number of capacitors in said stator array, the other terminals of said capacitors in said second array being connected to gap terminals arrayed about said housing so as to be in axial alignment with said stator gap terminal positions and being alignable with said rotor gap terminals as said rotor is rotated in said housing and respective gap terminals of said rotor coils pass each second array capacitor gap terminals at a predetermined gap distance;

Gap coupling terminals on said rotor equal in number to the number of rotor electromagnet coils and positioned to match the rotor electromagnet positions on said rotor, the gap coupling terminals being rotatable with said rotor so as to pass said adjacent stator coil and associated stator capacitor gap terminal at a predetermined distance therefrom;

A plurality of capacitor charging circuits connected respectively across each of said capacitors in both said first and said second arrays of capacitors for charging each of said capacitors to a predetermined high d-c potential;

A first source of unidirectional electric potential connected to each of said capacitor charging circuits for energising said charging circuits; and

A second unidirectional electric potential source connected to said electromagnets of said rotor and said stator of such polarity as to receive a charge from the inverse inductive discharge of the electromagnet coils as their fields collapse following the discharge of each capacitor through a rotor or stator electromagnet coil,

Whereby, whenever a rotor electromagnet is aligned opposite a stator electromagnet, the rotor coil gap terminal of that electromagnet is opposite an associated second capacitor array gap terminal, and a gap coupling terminal of said rotor is aligned opposite the stator electromagnet coil gap terminal and associated first capacitor gap terminal, the capacitors discharge the charge thereon across the gaps through their associated electromagnet coils to magnetise their respective juxtaposed electromagnet cores to cause them to repel one another, thus aligning a succeeding pair of rotor and stator electromagnets for capacitor discharge across their respective gaps, to cause them to repel one another, alignments rotor rotation within the housing continuously bringing successive rotor-stator electromagnets into alignment for discharge of the capacitors through them to produce continuous rotary motion of the rotor on said rotor shaft, so long as energy is applied to said charging circuits to recharge said capacitors after each discharge.

2. In an electric engine having a rotor comprising electromagnetic coil means roatatable within a stator comprising similar electromagnetic coil means, said electromagnetic coil means being polarised for magnetic repulsion;

Capacitor means electrically coupled across successive spark gaps to selected ones of said stator and all of the coils of said rotor;

Charging means connected to said capacitor means for charging said capacitor means to an electrical charge potential sufficient to cause arcing across said spark gaps to result in the discharge of said capacitor means through the electromagnetic coil means repel one another; and

A unidirectional electric power source connected to said charging means to energise said charging means to continue charging said capacitor means following each discharge whereby the rotor of said engine is maintained in rotation by the successive discharges of said capacitor means across successive spark gaps into said electromagnetic coil means.

3. An electric engine according to claim 2, wherein:

The charging means includes electronic square core oscillators connected to said unidirectional electric power source and includes step-up means and a rectifier to produce a substantial voltage step up from the voltage of said power source.

4. An electric engine according to claim 2, wherein:

The charging means includes a vibrator connected to said power source, and step-up transformer and rectifier means to provide a high voltage for charging said capacitor means.

5. A motive force-producing means comprising:

At least a first electromagnet means including at least one coil wound about a core,

At least a second electromagnet means including at least one coil wound about a core similar to said first core,

The respective cores being positioned adjacent to one another so that the magnetic polarities of the adjacent core surfaces are the same when a unidirectional electric current is passed through the coils,

At least one capacitor means having one terminal thereof connected to one terminal of both of said electromagnet coils,

The other terminal of said capacitor means being connected to one terminal of a spark gap means, the other terminals of the coils of both said first and said second electromagnet means being connected to the other terminal of said spark gap means,

At least one unidirectional pulse charging means connected to said capacitor means to charge said capacitor means to a relatively high potential sufficient to arc across said spark gap means at predetermined spacing of said gap terminals, and

A source of unidirectional potential connected to said charging circuit to energise said charging means,

Whereby upon application of current from said potential source to said charging means the successive pulses generated thereby charge said capacitor means to a voltage level sufficient to arc across said spark gap means to produce a discharge path for said capacitor means through said coils to cause said electromagnet means to repel one another with a substantial force.

6. A motive force-producing means according to claim 5, wherein:

Said first electromagnet means is secured in a relatively stable housing, and said second electromagnet means is connected with and freely movable relative to said stable housing, and has utilisation means connected thereto for performing work therewith when said capacitor means discharges through said coils of said electromagnet means.

7. A motive force-producing means according to claim 6, wherein said utilisation means is a motor rotor coupled with said second electromagnet means and said first electromagnet means is a stator.

8. A motive force-producing means according to claim 6, wherein said utilisation means is a piston attached to said second electromagnet means and is movable therewith to produce hammer-like blows when said capacitor means discharges through said electromagnet means.

9. In an electromotive force-generating system as disclosed, means for accelerating or decelerating the motion of a force-generating system, said means comprising:

At least two juxtaposed electromagnetic core elements, one fixed and one movable, including coils wound around it to provide a repulsion tendency when said cores are energised,

Spark gap terminals connected with said coils, Capacitor means connected with said spark gap terminals to discharge across said spark gap terminals through said coils when a charge of sufficient voltage level appears across said capacitor means, thus to energise said juxtaposed electromagnets to induce said juxtaposed electromagnet cores to repel one another,

Charging means connected to said capacitors for charging them to said sufficient voltage level, and selective positioning means coupled with said spark gap terminals and with at least said movable electromagnet core to cause selective displacement of said movable core with respect to said fixed core.

10. An electromotive force-generating system according to claim 9, wherein:

Said juxtaposed electromagnetic cores include a plurality of fixed cores and a smaller number of movable cores, said smaller number being an integral fraction of the number of fixed cores, and

Said selective positioning means is an electromagnetic clutch coupled with said smaller number of movable cores for movement therewith, and includes selective displacement means coupled with said spark gap terminals connected with said capacitors in said capacitor means and selected combinations of coils in said plurality of fixed electromagnets.

11. The method of generating motive power comprising the steps of:

a. positioning similar electromagnets in juxtaposed relationship with their respective cores arranged for repulsion when said electromagnets are energised,

b. charging capacitors to a relatively high potential, and

c. discharging said capacitors simultaneously through said electromagnets across spark gaps set to break down at said relatively high potential, thereby to cause said similar electromagnets to repel one another with considerable force.

12. The method of generating motive power defined in claim 11, wherein, in said positioning step at least one of said electromagnets is maintained in a fixed position and another electromagnet is free to move relative to said fixed electromagnet.

13. The method of generating motive power according to claim 11, wherein:

The charging step includes the charging of capacitors to a relatively high potential from a pulsed unipolar source of electrical energy.

14. in an electromagnetic capacitor discharge engine including movable electromagnets and fixed electromagnets, said movable electromagnets being movable into polar alignment with said fixed electromagnets, capacitor means, means for charging said capacitor means, and means for discharging said charged capacitor means through said fixed and movable electromagnets to polarise aligned fixed and movable electromagnets for magnetic repulsion, an acceleration and deceleration control means comprising:

First selective means for momentarily delaying the discharge of the capacitors until the movable electromagnets in said engine have begun to recede from the fixed electromagnets, in order to accelerate the motion of said movable electromagnets by the added impetus of the repulsion, and

Second selective means for momentarily accelerating the discharge of the capacitors to occur at a point in the motion of the movable electromagnets where said movable electromagnets are approaching said fixed electromagnets to decelerate the motion of said movable electromagnets by the tendency to repel the approaching electromagnets by the fixed electromagnets.

15. An electric engine, comprising:

Fixed electromagnets;

Movable electromagnets, movable into alignment with said fixed electromagnets;

Capacitor means;

Means for charging said capacitor means, and

Means for discharging said charged capacitor means through said fixed and movable electromagnets to polarise said aligned fixed and movable electromagnets for magnetic repulsion.

16. An electric engine as recited in claim 15, wherein: said means for discharging said charged capacitor means comprises voltage breakdown switch means.

17. An electric engine as recited in claim 16, wherein:

Said voltage breakdown switch means includes at least one terminal movable with at least one of said movable electromagnets for breaking down when said at least one of said movable electromagnets is in alignment with a said fixed electromagnet.

18. An electric engine as recited in claim 17, wherein:

Said voltage breakdown switch means comprises a spark gap means.

US Patent 4,595,975 June 17, 1986 Inventor: Edwin V. Gray snr.

EFFICIENT POWER SUPPLY SUITABLE FOR INDUCTIVE LOADS

Please note that this is a re-worded excerpt from this patent. It describes the circuitry used with Edwin Gray's power tube. Please be aware Edwin wanted at all costs, to conceal any useful technology while getting patents to encourage investors, so please understand that this patent is not intended to tell you how to make a working system of this type.

Fig.1 is a schematic circuit diagram of the electrical driving system.
Fig.2 is an elevational sectional view of the electrical conversion element.
Fig.3 is a plan sectional view taken along line 3--3 of Fig.2.
Fig.4 is a plan sectional view taken along line 4--4 of Fig.2.
Fig.5 is a schematic circuit diagram of the alternating-current input circuit.

SUMMARY OF THE INVENTION

The present invention provides a more efficient driving system comprising a source of electrical voltage; a vibrator connected to the low-voltage source for forming a pulsating signal; a transformer connected to the vibrator for receiving the pulsating signal; a high-voltage source, where available, connected to a bridge-type rectifier; or the bridge-type rectifier connected to the high voltage pulse output of the transformer; a capacitor for receiving the voltage pulse output; a conversion element having first and second anodes, electrically conductive means for receiving a charge positioned about the second anode and an output terminal connected to the charge receiving means, the second anode being connected to the capacitor; a commutator connected to the source of electrical voltage and to the first anode; and an inductive load connected to the output terminal whereby a high energy discharge between the first and second anodes is transferred to the charge receiving means and then to the inductive load.

As a sub-combination, the present invention also includes a conversion element comprising a housing; a first low voltage anode mounted to the housing, the first anode adapted to be connected to a voltage source; a second high voltage anode mounted to the housing, the second anode adapted to be connected to a voltage source; electrically conductive means positioned about the second anode and spaced therefrom for receiving a charge, the charge receiving means being mounted to the housing; and an output terminal communicating with the charge receiving means, said terminal adapted to be connected to an inductive load.

The invention also includes a method for providing power to an inductive load comprising the steps of providing a voltage source, pulsating a signal from said source; increasing the voltage of said signal; rectifying said signal; storing and increasing the signal; conducting said signal to a high voltage anode; providing a low voltage to a second anode to form a high energy discharge; electrostatically coupling the discharge to a charge receiving element; conducting the discharge to an inductive load; coupling a second capacitor to the load; and coupling the second capacitor to the source.

It is an aim of the present invention to provide a system for driving an inductive load which system is substantially more efficient than any now existing. Another object of the present invention is to provide a system for driving an inductive load which is reliable, is inexpensive and simply constructed.

The foregoing objects of the present invention together with various other objects, advantages, features and results thereof which will be evident to those skilled in the art in light of this disclosure may be achieved with the exemplary embodiment of the invention described in detail hereinafter and illustrated in the accompanying drawings.

DESCRIPTION OF THE PREFERRED EMBODIMENT

While the present invention is susceptible of various modifications and alternative constructions, an embodiment is shown in the drawings and will herein be described in detail. It should be understood however that it is not the intention to limit the invention to the particular form disclosed; but on the contrary, the invention is to cover all modifications, equivalents and alternative constructions falling within the spirit and scope of the invention as expressed in the appended claims.

There is disclosed herein an electrical driving system which, on theory, will convert low voltage electric energy from a source such as an electric storage battery to a high potential, high current energy pulse that is capable of developing a working force at the inductive output of the device that is more efficient than that which is capable of being developed directly from the energy source. The improvement in efficiency is further enhanced by the capability of the device to return that portion of the initial energy developed, and not used by the inductive load in the production of mechanical energy, to the same or second energy reservoir or source for use elsewhere, or for storage.

This system accomplishes the results stated above by harnessing the “electrostatic” or “impulse” energy created by a high-intensity spark generated within a specially constructed electrical conversion switching element tube. This element utilises a low-voltage anode, a high-voltage anode, and one or more “electrostatic” or charge receiving grids. These grids are of a physical size, and appropriately positioned, as to be compatible with the size of the tube, and therefore, directly related to the amount of energy to be anticipated when the device is operating.

The low-voltage anode may incorporate a resistive device to aid in controlling the amount of current drawn from the energy source. This low-voltage anode is connected to the energy source through a mechanical commutator or a solid-state pulser that controls the timing and duration of the energy spark within the element. The high-voltage anode is connected to a high- voltage potential developed by the associated circuits. An energy discharge occurs within the element when the external control circuits permit. This short duration, high-voltage, high-current energy pulse is captured by the “electrostatic” grids within the tube, stored momentarily, then transferred to the inductive output load.

The increase in efficiency anticipated in converting the electrical energy to mechanical energy within the inductive load is attributed to the utilisation of the most optimum timing in introducing the electrical energy to the load device, for the optimum period of time.

Further enhancement of energy conservation is accomplished by capturing a significant portion of the energy generated by the inductive load when the useful energy field is collapsing. This energy is normally dissipated in load losses that are contrary to the desired energy utilisation, and have heretofore been accepted because no suitable means had been developed to harness this energy and restore it to a suitable energy storage device.

The present invention is concerned with two concepts or characteristics. The first of these characteristics is observed with the introduction of an energising cur- rent through the inductor. The inductor creates a contrary force (counter-electromotive force or CEMP) that opposes the energy introduced into the inductor. This CEMF increases throughout the time the introduced energy is increasing.

In normal applications of an alternating-current to an inductive load for mechanical applications, the useful work of the inductor is accomplished prior to terminating the application of energy. The excess energy applied is thereby wasted.

Previous attempts to provide energy inputs to an inductor of time durations limited to that period when the optimum transfer of inductive energy to mechanical energy is occurring, have been limited by the ability of any such device to handle the high current required to optimise the energy transfer.

The second characteristic is observed when the energising current is removed from the inductor, As the current is decreased, the inductor generates an EMF that opposes the removal of current or, in other words, produces an energy source at the output of the inductor that simulates the original energy source, reduced by the actual energy removed from the circuit by the mechanical load. This “regenerated”, or excess, energy has previously been lost due to a failure to provide a storage capability for this energy.

In this invention, a high-voltage, high-current, short duration energy pulse is applied to the inductive load by the conversion element. This element makes possible the use of certain of that energy impressed within an arc across a spark-gap, without the resultant deterioration of circuit elements normally associated with high energy electrical arcs.

This invention also provides for capture of a certain portion of the energy induced by the high inductive kick produced by the abrupt withdrawal of the introduced current. This abrupt withdrawal of current is attendant upon the termination of the stimulating arc. The voltage spike so created is imposed upon a capacitor that couples the attendant current to a secondary energy storage device.

A novel, but not essential, circuit arrangement provides for switching the energy source and the energy storage device. This switching may be so arranged as to actuate automatically at predetermined times. The switching may be at specified periods determined by experimentation with a particular device, or may be actuated by some control device that measures the relative energy content of the two energy reservoirs.

FIG. 1

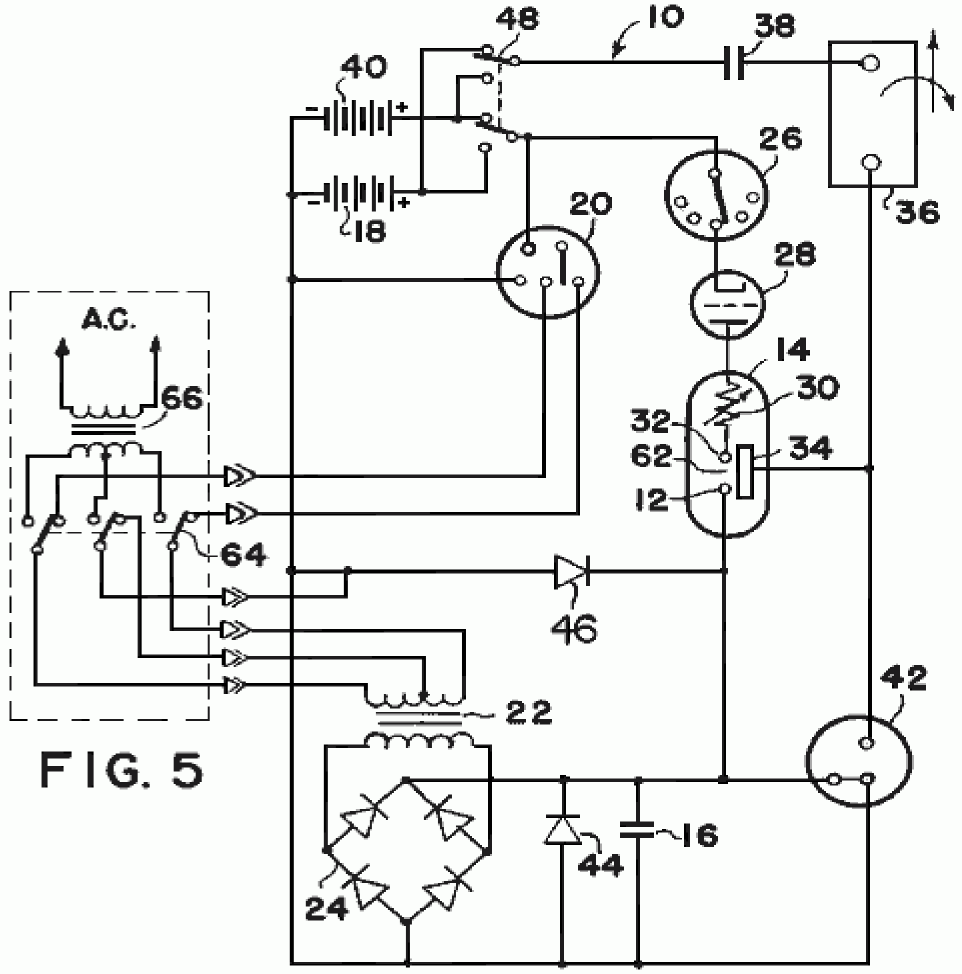

FIG. 5

Referring now to **Fig.1**, the system **10** will be described in additional detail. The potential for the high- voltage anode, **12** of the conversion element **14** is developed across the capacitor **16**. This voltage is produced by drawing a low current from a battery source **18** through the vibrator **20**. The effect of the vibrator is to create a pulsating input to the transformer **22**. The turns ratio of the transformer is chosen to optimise the volt- age applied to a bridge-type rectifier **24**. The output of the rectifier is then a series of high-voltage pulses of modest current. When the available source is already of the high voltage, AC type, it may be coupled directly to the bridge-type rectifier.

By repetitious application of these output pulses from the bridge-type rectifier to the capacitor **16**, a high-voltage, high-level charge is built up on the capacitor.

Control of the conversion switching element tube is maintained by a commutator **26**. A series of contacts mounted radially about a shafts or a solid-state switching device sensitive to time or other variable may be used for this control element. A switching element tube type one-way energy path **28** is introduced between the commutator device and the conversion switching element tube to prevent high energy arcing at the commutator current path. When the switching element tube is closed, current from the voltage source **18** is routed through a resistive element **30** and a low voltage anode **32**. This causes a high energy discharge between the anodes within the conversion switching element tube **14**.

The energy content of the high energy pulse is electrostatically coupled to the conversion grids **34** of the conversion element. This electrostatic charge is applied through an output terminal **60** (**Fig.2**) across the load inductance **36**, inducing a strong electromagnetic field about the inductive load. The intensity of this electromagnetic field is determined by the high electromotive potential developed upon the electrostatic grids and the very short time duration required to develop the energy pulse.

If the inductive load is coupled magnetically to a mechanical load, a strong initial torque is developed that may be efficiently utilised to produce physical work

Upon cessation of the energy pulse (arc) within the conversion switching element tube the inductive load is decoupled, allowing the electromagnetic field about the inductive load to collapse. The collapse of this energy field induces within the inductive load a counter EMF. This counter EMF creates a high positive potential across a second capacitor which, in turn, is induced into the second energy storage device or battery **40** as a charging current. The amount of charging current available to the battery 40 is dependent upon the initial conditions within the circuit at the time of discharge within the conversion switching element tube and the amount of mechanical energy consumed by the workload.

A spark-gap protection device **42** is included in the circuit to protect the inductive load and the rectifier elements from unduly large discharge currents. Should the potentials within the circuit exceed predetermined values, fixed by the mechanical size and spacing of the elements within the protective device, the excess energy is dissipated (bypassed) by the protective device to the circuit common (electrical ground).

Diodes **44** and **46** bypass the excess overshoot generated when the “Energy Conversion Switching Element Tube” is triggered. A switching element U allows either energy storage source to be used as the primary energy source, while the other battery is used as the energy retrieval unit. The switch facilitates interchanging the source and the retrieval unit at optimum intervals to be determined by the utilisation of the conversion switching element tube. This switching may be accomplished manually or automatically, as determined by the choice of switching element from among a large variety readily available for the purpose.

FIG. 2

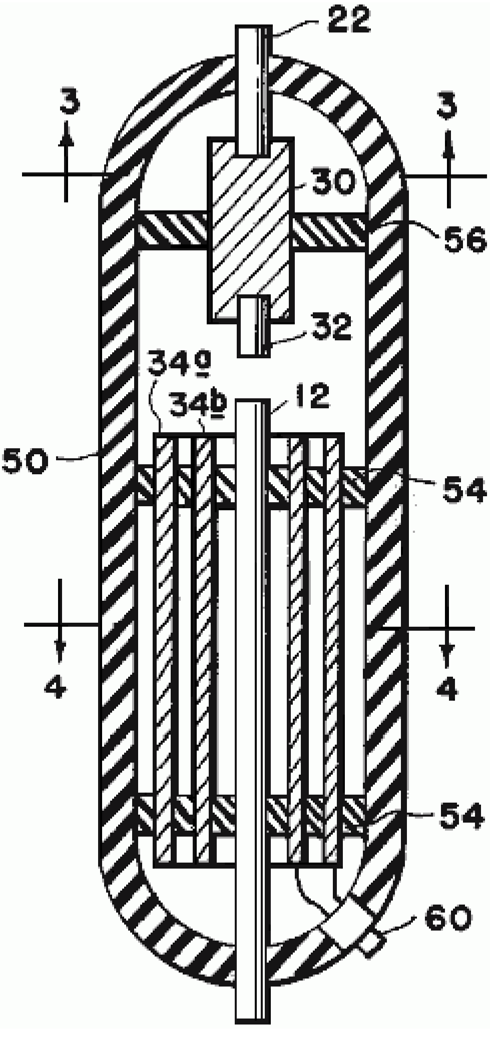

FIG. 3

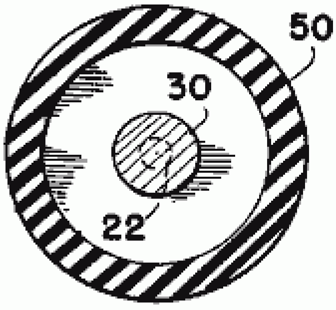

FIG. 4

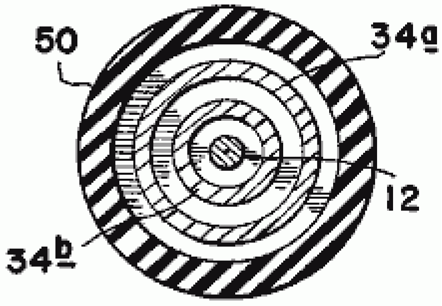

Fig.2, Fig.3, and **Fig.4** show the mechanical structure of the conversion switching element tube **14**. An outer housing **50** may be of any insulative material such as glass. The anodes **12** and **22** and grids **34a** and **34b** are firmly secured by nonconductive spacer material **54**, and **56**. The resistive element **30** may be introduced into the low-voltage anode path to control the peak currents through the conversion switching element tube. The resistive element may be of a piece, or it may be built of one or more resistive elements to achieve the desired result.

The anode material may be identical for each anode, or may be of differing materials for each anode, as dictated by the most efficient utilisation of the device, as determined by appropriate research at the time of production for the intended use. The shape and spacing of the electrostatic grids is also susceptible to variation with application (voltage, current, and energy requirements).

It is the contention of the inventor that by judicious mating of the elements of the conversion switching element tube, and the proper selection of the components of the circuit elements of the system, the desired theoretical results may be achieved. It is the inventor's contention that this mating and selection process is well within the capabilities of intensive research and development technique.

Let it be stated here that substituting a source of electric alternating-current subject to the required cur- rent and/or voltage shaping and/or timing, either prior to being considered a primary energy source, or there- after, should not be construed to change the described utilisation or application of primary energy in any way. Such energy conversion is readily achieved by any of a multitude of well established principles. The preferred embodiment of this invention merely assumes optimum utilisation and optimum benefit from this invention when used with portable energy devices similar in principle to the wet-cell or dry-cell battery.

This invention proposes to utilise the energy contained in an internally generated high-voltage electric spike (energy pulse) to electrically energise an inductive load.: this inductive load being then capable of converting the energy so supplied into a useful electrical or mechanical output.

In operation the high-voltage, short-duration electric spike is generated by discharging the capacitor **16** across the spark-gap in the conversion switching element tube. The necessary high-voltage potential is stored on the capacitor in incremental, additive steps from the bridge-type rectifier **24**. When the energy source is a direct-current electric energy storage device, such as the battery **12**, the input to the bridge rectifier is provided by the voltage step-up transformer **22**, that is in turn energised from the vibrator **20**, or solid-state chopper, or similar device to properly drive the transformer and rectifier circuits.

When the energy source is an alternating-current, switches **64** disconnect transformer **22** and the input to the bridge-type rectifier **24** is provided by the voltage step-up transformer **66**, that is in turn energised from the vibrator **20**, or solid-state chopper, or similar device to properly drive the transformer and rectifier circuits.

The repetitions output of the bridge rectifier incrementally increases the capacitor charge toward its maximum. This charge is electrically connected directly to the high-voltage anode **12** of the conversion switching element tube. When the low-voltage anode **32** is connected to a source of current, an arc is created in the spark-gap designated **62** of the conversion switching element tube equivalent to the potential stored on the high-voltage anode, and the current available from the low-voltage anode.

Because the duration of the arc is very short, the instantaneous voltage, and instantaneous current may both be very high. The instantaneous peak apparent power is therefore, also very high. Within the conversion switching element tube, this energy is absorbed by the grids **34a** and **34b** mounted circumferentially about the interior of the tube.

Control of the energy spike within the conversion switching element tube is accomplished by a mechanical, or solid-state commutator, that closes the circuit path from the low-voltage anode to the current source at that moment when the delivery of energy to the output load is most auspicious. Any number of standard high-accuracy, variable setting devices are available for this purpose. When control of the repetitive rate of the system's output is required, it is accomplished by controlling the time of connection at the low-voltage anode.

Thus there can be provided an electrical driving system having a low-voltage source coupled to a vibrator, a transformer and a bridge-type rectifier to provide a high voltage pulsating signal to a first capacitor. Where a high-voltage source is otherwise available, it may be coupled direct to a bridge-type rectifier, causing a pulsating signal to a first capacitor. The capacitor in turn is coupled to a high-voltage anode of an electrical conversion switching element tube. The element also includes a low-voltage anode which in turn is connected to a voltage source by a commutator, a switching element tube, and a variable resistor. Mounted around the high-voltage anode is a charge receiving plate which in turn is coupled to an inductive load to transmit a high-voltage discharge from the element to the load. Also coupled to the load is a second capacitor for storing the back EMF created by the collapsing electrical field of the load when the current to the load is blocked. The second capacitor in turn is coupled to the voltage source.

ASPDEN & ADAMS: MOTOR/GENERATOR

Patent GB 2,282,708   12th April 1995   Inventors: Harold Aspden (UK) and Robert George Adams (NZ)

ELECTRICAL MOTOR / GENERATOR

This version of the patent has been re-worded in an attempt to make it easier to read and understand. It describes the design of a pulsed electromagnet / permanent magnet motor which is capable of a higher power output than it’s own power input.

ABSTRACT

An electrodynamic motor-generator has a salient pole permanent magnet rotor interacting with salient stator poles to form a machine operating on the magnetic reluctance principle. The intrinsic ferromagnetic power of the magnets provides the drive torque by bringing the poles into register whilst current pulses demagnetise the stator poles as the poles separate. In as much as less power is needed for stator demagnetisation than is fed into the reluctance drive by the thermodynamic system powering the ferromagnetic state, the machine operates regeneratively by virtue of stator winding interconnection with unequal number of rotor and stator poles. A rotor construction is disclosed (**Fig.6** and **Fig.7**). The current pulse may be such as to cause repulsion of the rotor poles.

FIELD OF THE INVENTION

This invention relates to a form of electric motor which serves a generating function in that the machine can act regeneratively to develop output electrical power or can generate mechanical drive torque with unusually high efficiency in relation to electrical power input.

The field of invention is that of switched reluctance motors, meaning machines which have salient poles and operate by virtue of the mutual magnetic attraction and/or repulsion as between magnetised poles.

The invention particularly concerns a form of reluctance motor which incorporates permanent magnets to establish magnetic polarisation.

BACKGROUND OF THE INVENTION

There have been proposals in the past for machines in which the relative motion of magnets can in some way develop unusually strong force actions which are said to result in more power output than is supplied as electrical input.

By orthodox electrical engineering principles such suggestions have seemed to contradict accepted principles of physics, but it is becoming increasingly evident that conformity with the first law of thermodynamics allows a gain in the electromechanical power balance provided it is matched by a thermal cooling.

In this sense, one needs to extend the physical background of the cooling medium to include, not just the machine structure and the immediate ambient environment, but also the sub-quantum level of what is termed, in modern physics, the zero-point field. This is the field activity of the vacuum medium which exists in the space between atomic nuclei and atomic electrons and is the seat of the action which is that associated with the Planck constant. Energy is constantly being exchanged as between that activity and coextensive matter forms but normally these energy fluctuations preserve, on balance, an equilibrium condition so that this action passes unnoticed at the technology level.

Physicists are becoming more and more aware of the fact that, as with gravitation, so magnetism is a route by which we can gain access to the sea of energy that pervades the vacuum. Historically, the energy balance has been written in mathematical terms by assigning 'negative' potential to gravitation or magnetism. However, this is only a disguised way of saying that the vacuum field, suitably influenced by the gravitating mass of a body in the locality or by magnetism in a ferromagnet has both the capacity and an urge to shed energy.

Now, however, there is growing awareness of the technological energy generating potential of this field background and interest is developing in techniques for 'pumping' the coupling between matter and vacuum field to derive power from that hidden energy source. Such research may establish that this action will draw on the

2.7K cosmic background temperature of the space medium through which the Earth travels at some 400 km/s. The effect contemplated could well leave a cool 'vapour trail' in space as a machine delivering heat, or delivering a more useful electrical form of energy that will revert to heat, travels with body Earth through that space.

In pure physics terms, relevant background is of recent record in the August 1993 issue of Physical Review E, vol. 48, pp. 1562-1565 under the title: 'Extracting energy and heat from the vacuum', authored by D. C. Cole and H. E. Puthoff. Though the connection is not referenced in that paper, one of its author's presented experimental evidence on that theme at an April 1993 conference held in Denver USA. The plasma power generating device discussed at that conference was the subject of U. S. Patent No. 5,018,180, the inventor of record being K. R. Shoulders.

The invention, to be described below, operates by extracting energy from a magnetic system in a motor and the relevant scientific background to this technology can be appreciated from the teachings of E. B. Moullin, a Cambridge Professor of Electrical Engineering who was a President of the Institution of Electrical Engineers in U. K. That prior art will be described below as part of the explanation of the operation of the invention.

The invention presented here concerns specific structural design features of a machine adapted for robust operation, but these also have novelty and special merit in a functional operation. What is described is quite distinct from prior art proposals, one being a novel kind of motor proposed by Gareth Jones at a 1988 symposium held in Hull, Canada under the auspices of the Planetary Association for Clean Energy. Jones suggested the adaptation of an automobile alternator which generates three-phase AC for rectification and use as a power supply for the electrics in the automobile. This alternator has a permanent magnet rotor and Jones suggested that it could be used, with high efficiency gain and torque performance, by operating it as a motor with the three-phase winding circuit excited so as to promote strong repulsion between the magnet poles and the stator poles after the poles had come into register.

However, the Jones machine is not one exploiting the advantages of the invention to be described, because it is not strictly a reluctance motor having salient poles on both stator and rotor. The stator poles in the Jones machine are formed by the winding configuration in a slotted stator form, the many slots being uniformly distributed around the inner circumference of the stator and not constituting a pole system which lends itself to the magnetic flux actions to be described by reference to the E. B. Moullin experiment.

The Jones machine operates by generating a rotating stator field which, in a sense, pushes the rotor poles forward rather than pulling them in the manner seen in the normal synchronous motor. Accordingly, the Jones machine relies on the electric current excitation of the motor producing a field system which rotates smoothly but has a polarity pattern which is forced by the commutation control to keep behind the rotor poles in asserting a continuous repulsive drive.

Another prior art proposal which is distinguished from this invention is that of one of the applicants, H. Aspden, namely the subject of U.K. Patent No. 2,234,863 (counterpart U.S. Patent Serial No.4,975,608). Although this latter invention is concerned with extracting energy from the field by the same physical process as the subject invention, the technique for accessing that energy is not optimum in respect of the structure or method used. Whereas in this earlier disclosure, the switching of the reluctance drive excited the poles in their approach phase, the subject invention, in one of its aspects, offers distinct advantages by demagnetisation or reversal of magnetisation in the pole separation phase of operation.

There are unexpected advantages in the implementation proposed by the subject invention, inasmuch as recent research has confirmed that it requires less input power to switch off the mutual attraction across an air gap between a magnet and an electromagnet than it does to switch it on. Usually, in electromagnetism, a reversal symmetry is expected, arising from conventional teaching of the way forward and back magnetomotive forces govern the resulting flux in a magnetic circuit.

This will be further explained after describing the scope of the invention.

BRIEF DESCRIPTION OF THE INVENTION

According to one aspect of the invention, an electrodynamic motor/generator machine comprises a stator configured to provide a set of stator poles, a corresponding set of magnetising windings mounted on the stator pole set, a rotor having two sections each of which has a set of salient pole pieces, the rotor sections being axially spaced along the axis of rotation of the rotor, rotor magnetisation means disposed between the two rotor sections arranged to produce a unidirectional magnetic field which magnetically polarises the rotor poles, whereby the pole faces of one rotor section all have a north polarity and the pole faces of the other rotor section all have a south polarity and electric circuit connections between an electric current source and the stator magnetising windings arranged to regulate the operation of the machine by admitting current pulses for a duration determined according to the angular position of the rotor, which pulses have a direction tending to oppose the polarisation induced in the stator by the rotor polarisation as stator and rotor poles separate from an in-register position, whereby the action of the rotor magnetisation means provides a reluctance motor drive force to bring stator and rotor poles into register and the action of the stator magnetisation windings opposes the counterpart reluctance braking effect as the poles separate.

According to a feature of the invention, the circuit connecting the electric current source and the stator magnetising windings is designed to deliver current pulses which are of sufficient strength and duration to provide demagnetisation of the stator poles as the stator and rotor poles separate from an in-register position.

In this regard it is noted that in order to suppress the reluctance drive torque or brake torque, depending upon whether poles are converging or separating, a certain amount of electrical power must be fed to the magnetising windings on the stator. In a sense these windings are really 'demagnetising windings' because the polarity of the circuit connections admit the pulse current in the demagnetising direction.

However, it is more usual to refer to windings on magnetic cores as 'magnetising windings' even though they can function as primary windings or secondary windings, the former serving the magnetisation function with input power and the latter serving a demagnetising function with return of power.

According to another feature of the invention, the circuit connecting the electric current source and the stator magnetising windings is designed to deliver current pulses which are of sufficient strength and duration to provide a reversal of magnetic flux direction in the stator poles as the stator and rotor poles separate from an in-register position, whereby to draw on power supplied from the electric current source to provide additional forward drive torque.

According to a further feature of the invention, the electric current source connected to a stator magnetising winding of a first stator pole comprises, at least partially, the electrical pulses induced in the stator magnetising winding of a different second stator pole, the stator pole set configuration in relation to the rotor pole set configuration being such that the first stator pole is coming into register with a rotor pole as the second stator pole separates from its in-register position with a rotor pole.

This means that the magnetising windings of two stator poles are connected so that both serve a 'demagnetising' function, one in resisting the magnetic action of the mutual attraction in pulling poles into register, an action which develops a current pulse output and one in absorbing this current pulse, again by resisting the magnetic inter-pole action to demagnetise the stator pole as its associated rotor pole separates.

In order to facilitate the function governed by this circuit connection between stator magnetising windings, a phase difference is needed and this is introduced by designing the machine to have a different number of poles in a set of stator poles from the number of rotor poles in each rotor section. Together with the dual rotor section feature, this has the additional merit of assuring a smoother torque action and reducing magnetic flux fluctuations and leakage effects which contribute substantially to machine efficiency.

Thus, according to another feature of the invention, the stator configuration provides pole pieces which are common to both rotor sections in the sense that when stator and rotor poles are in-register the stator pole pieces constitute bridging members for magnetic flux closure in a magnetic circuit including that of the rotor magnetisation means disposed between the two rotor sections.

Preferably, the number of poles in a set of stator poles and the number of rotor poles in each section do not share a common integer factor, the number of rotor poles in one rotor section is the same as that in the other rotor section and the number of poles in a stator set and the number of poles in a rotor section differs by one, with the pole faces being of sufficient angular width to assure that the magnetic flux produced by the rotor magnetisation means can find a circular magnetic flux closure route through the bridging path of a stator pole and through corresponding rotor poles for any angular position of the rotor.

It is also preferable from a design viewpoint for the stator pole faces of this invention to have an angular width that is no greater than half the angular width of a rotor pole and for the rotor sections to comprise circular steel laminations in which the rotor poles are formed as large teeth at the perimeter with the rotor magnetisation means comprising a magnetic core structure the end faces of which abut two assemblies of such laminations forming the two rotor sections.

According to a further feature of the invention, the rotor magnetisation means comprises at least one permanent magnet located with its polarisation axis parallel with the rotor axis. The motor-generator may include an apertured metal disc that is of a non-magnetisable substance mounted on a rotor shaft and positioned intermediate the two rotor sections, each aperture providing location for a permanent magnet, whereby the centrifugal forces acting on the permanent magnet as the rotor rotates are absorbed by the stresses set up in the disc. Also, the rotor may be mounted on a shaft that is of a non-magnetisable substance, whereby to minimise magnetic leakage from the rotor magnetising means through that shaft.

According to another aspect of the invention, an electrodynamic motor-generator machine comprises a stator configured to provide a set of stator poles, a corresponding set of magnetising windings mounted on the stator pole set, a rotor having two sections each of which has a set of salient pole pieces, the rotor sections being axially spaced along the axis of rotation of the rotor, rotor magnetisation means incorporated in the rotor structure and arranged to polarise the rotor poles, whereby the pole faces of one rotor section all have a north polarity and the pole faces of the other rotor section all have a south polarity and electric circuit connections between an electric current source and the stator magnetising windings arranged to regulate the operation of the machine by admitting current pulses for a duration determined according to the angular position of the rotor, which pulses have a direction tending to oppose the polarisation induced in the stator by the rotor polarisation as stator and rotor poles separate from an in-register position, whereby the action of the rotor magnetisation means provides a reluctance motor drive force to bring stator and rotor poles into register and the action of the stator magnetisation windings opposes the counterpart reluctance braking effect as the poles separate.

According to a feature of this latter aspect of the invention, the electric current source connected to a stator magnetising winding of a first stator pole comprises, at least partially, the electrical pulses induced in the stator magnetising winding of a different second stator pole, the stator pole set configuration in relation to the rotor pole set configuration being such that the first stator pole is coming into register with a rotor pole as the second stator pole separates from its in-register position with a rotor pole.

BRIEF DESCRIPTION OF THE DRAWINGS

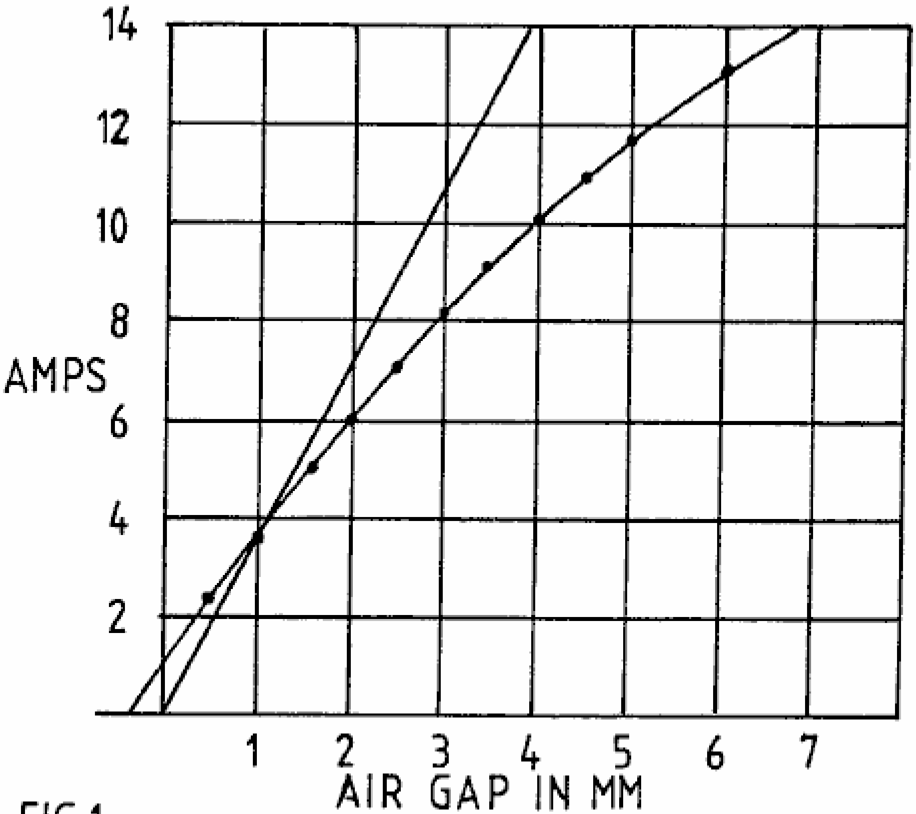

FIG.1

Fig.1 presents magnetic core test data showing how the volt-amp reactance power required to set up a constant magnetic flux action in an air gap, as assured by constant AC voltage excitation of a magnetising winding, falls short of the associated power of the potential implicit in the force action across that air gap.

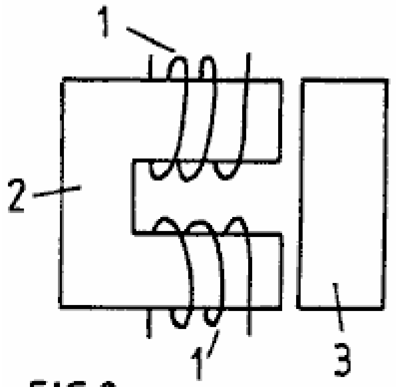

FIG.2

Fig.2 depicts the test structure to which Fig. 1 data applies.

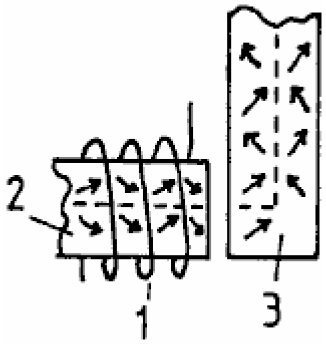

FIG.3

Fig.3 depicts the magnetisation action at work in causing magnetic flux to traverse an air-gap and turn a corner in a circuit through a magnetic core.

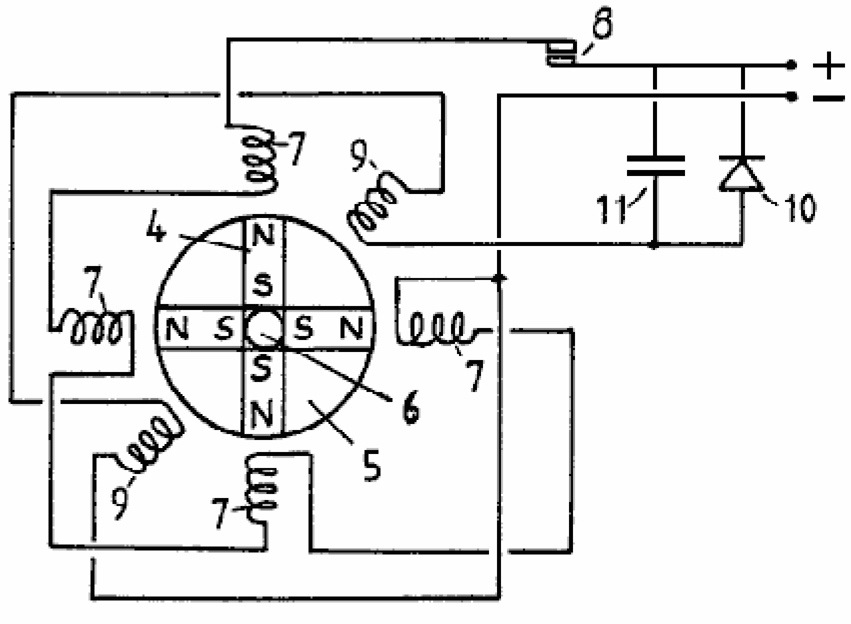

FIG. 4

Fig.4 shows the configuration of a test device used to prove the operating principles of the invention described.

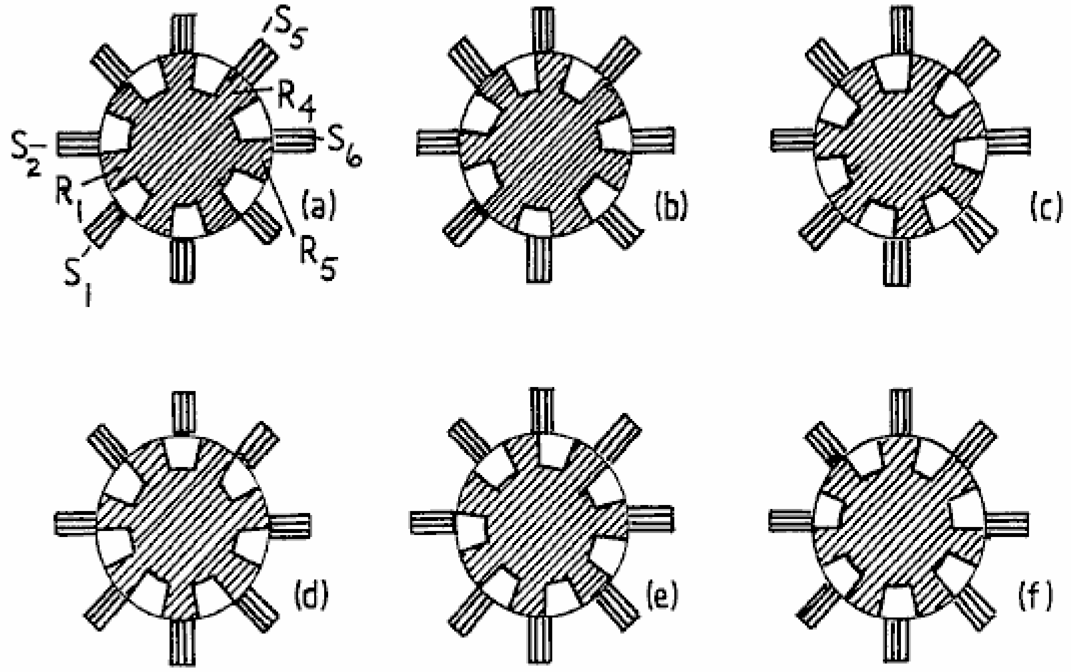

FIG.5

Fig.5 in its several illustrations depicts the progressive rotor pole to stator pole relationship as a rotor turns through a range of angular positions in a preferred embodiment of a machine according to the invention.

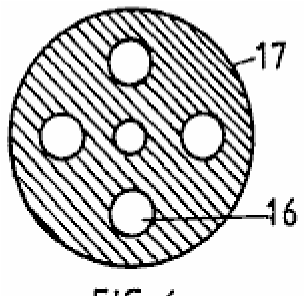

FIG. 6

Fig.6 shows the form of a disc member which provides location for four permanent magnets in the machine described.

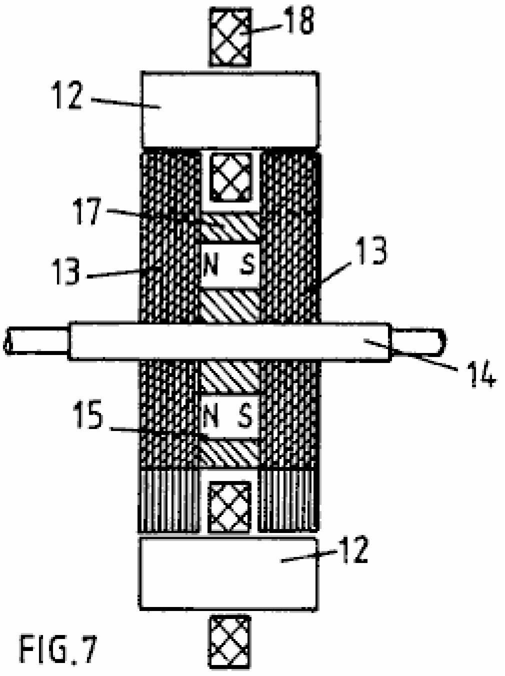

FIG.7

Fig.7 shows a cross-section of the magnetic circuit structure of a machine embodying the invention.

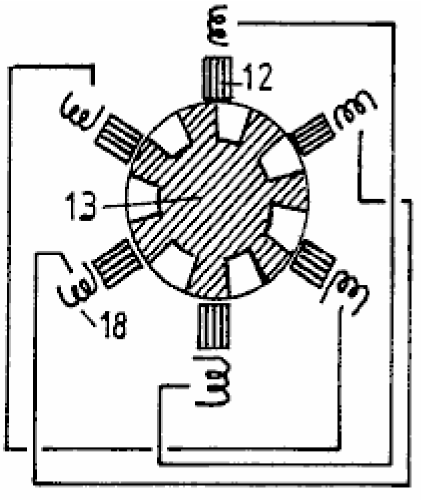

FIG.8

Fig.8 shows a six stator pole configuration with a seven pole rotor and depicts a schematic series connected linking of the magnetising windings of diametrically opposite stator poles.

DETAILED DESCRIPTION OF THE INVENTION

The fact that one can extract energy from the source which powers the intrinsic ferromagnetic state is not explicitly evident from existing textbooks, but it is implicit and, indeed, does become explicit once pointed out, in one textbook authored by E. B. Moullin. His book 'The Principles of Electromagnetism' published by Clarendon Press, Oxford (3rd Edition, 1955) describes on pages 168-174 an experiment concerned with the effect of air gaps between poles in a magnetic circuit. The data obtained are reproduced in **Fig.1**, where Professor Moullin shows a curve representing AC current input for different air gaps, given that the voltage supplied is constant. In the same figure, Moullin presents the theoretical current that would need to be applied to sustain the same voltage, and so the related pole forces across the air gap, assuming (a) no flux leakage and (b) that there is complete equality between inductive energy input and the mechanical energy potential for the magnetisation that is established in the air gap in a quarter-cycle period at the AC power excitation frequency.

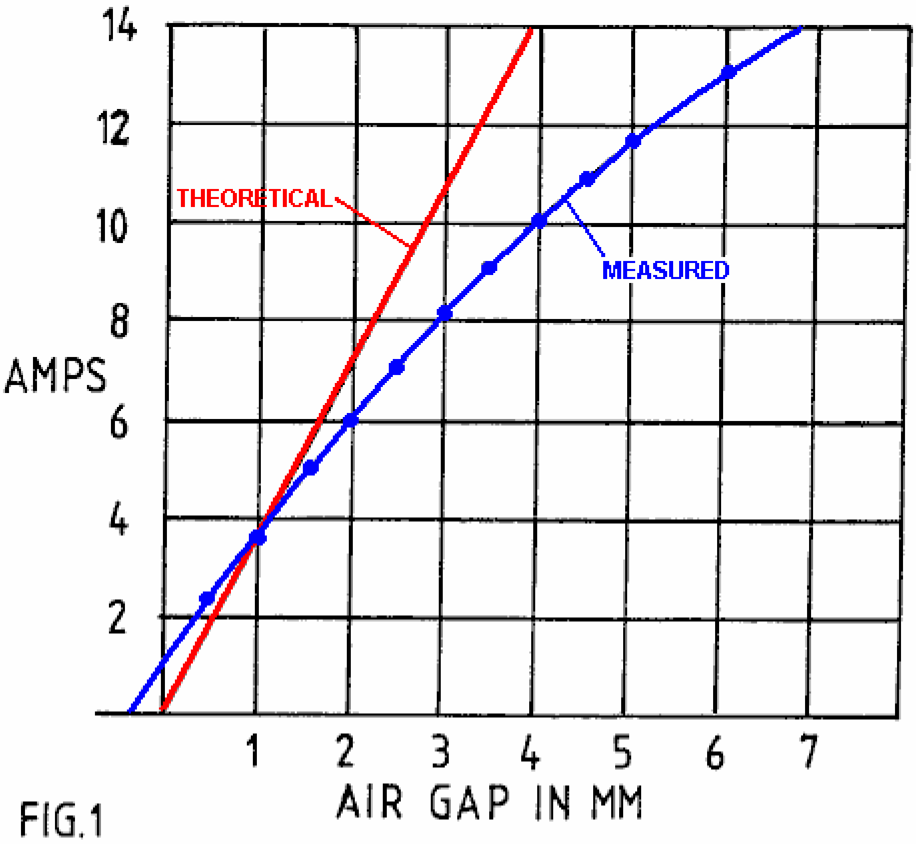

FIG.1

The data show that, even though the level of magnetic polarisation is well below the saturation value, being confined to a range that is regarded as the linear permeability range in transformer design, there is a clear drop-off of current, and so the volt-amp reactive power input needed, as current increases, compared with that predicted by the mechanical potential built up in the air gaps. Unless leakage flux is excessive, here was clear evidence of anomalous energy activity.

Moullin discusses the leakage flux inferred by this experiment but points out that there is considerable mystery in why the effect of a small gap, which should certainly not result in much flux leakage in the gap region, nevertheless has an enormous effect in causing what has to be substantial leakage in the light of the energy discrepancy. Moullin did not contemplate that energy had been fed in from the zero-point field system and so he left the issue with the statement that it was virtually impossible to predict leakage flux by calculation.

He was, of course, aware of magnetic domain structure and his argument was that the leakage flux problem was connected with what he termed a 'yawing' action of the flux as it passes around the magnetic circuit. Normally, provided the level of polarisation is below the knee of the B-H curve, which occurs at about 70% of saturation in iron cores of general crystal composition, it requires very little magnetising field to change the magnetic flux density. This is assuming that every effort is made to avoid air gaps. The action involves domain wall movements so that the magnetic states of adjacent domains switch to different crystal axes of easy magnetisation and this involves very little energy change.

However, if there is an air gap ahead in the flux circuit and the magnetising winding is not sitting on that air gap, the iron core itself has to be the seat of a progressive field source linking the winding and the gap. It can only serve in that sense by virtue of the lines of flux in the domains being forced to rotate somewhat from the preferred easy axes of magnetisation, with the help of the boundary surfaces around the whole core. This action means that, forcibly, and consequential upon the existence of the air gap, the flux must be carried through the core by that 'yawing' action. It means that substantial energy is needed to force the establishment of those fields within the iron core. More important, however, from the point of view of this invention, it means that the intrinsic magnetic polarisation effects in adjacent magnetic domains in the iron cease to be mutually parallel or orthogonal so as to stay directed along axes of easy magnetisation. Then, in effect, the magnetising action is not just that of the magnetising winding wrapped around the core but becomes also that of adjacent ferromagnetic polarisation as the latter act in concert as vacuum-energy powered solenoids and are deflected into one another to develop the additional forward magnetomotive forces.

The consequences of this are that the intrinsic ferromagnetic power source with its thermodynamic ordering action contributes to doing work in building up forces across the air gap. The task, in technological terms, is then to harness that energy as the gap is closed, as by poles coming together in a reluctance motor, and avoid returning that energy as the poles separate, this being possible if the controlling source of primary magnetisation is well removed from the pole gap and the demagnetisation occurs when the poles are at the closest position.

This energy situation is evident in the Moullin data, because the constant AC voltage implies a constant flux amplitude across the air gap if there is no flux leakage in the gap region. A constant flux amplitude implies a constant force between the poles and so the gap width in relation to this force is a measure of the mechanical energy potential of the air gap. The reactive volt-amp power assessment over the quarter-cycle period representing the polarisation demand can then be compared with the mechanical energy so made available. As already stated, this is how Moullin deduced the theoretical current curve. In fact, as his data show, he needed less current than the mechanical energy suggested and so he had in his experiment evidence of the vacuum energy source that passed unnoticed and is only now revealing itself in machines that can serve our energy needs.

In the research leading to this patent application the Moullin experiment has been repeated to verify a condition where a single magnetising winding serves three air gaps. The Moullin test configuration is shown in **Fig.2**, but in repeating the experiment in the research leading to this invention, a search coil was mounted on the bridging member and this was used to compare the ratio of the voltage applied to the magnetising winding and that induced in the search coil.

The same fall-off feature in current demand was observed, and there was clear evidence of substantial excess energy in the air gap. This was in addition to the inductive energy that necessarily had to be locked into the magnetic core to sustain the 'yawing' action of the magnetic flux already mentioned.

It is therefore emphasised that, in priming the flux 'yawing' action, energy is stored inductively in the magnetic core, even though this has been deemed to be the energy of flux leakage outside the core. The air gap energy is also induction energy. Both energies are returned to the source winding when the system is demagnetised, given a fixed air gap.

If, however, the air gap closes after or during magnetisation, much of that inductive energy goes into the mechanical work output. Note then that the energy released as mechanical work is not just that stored in the air gap but is that stored in sustaining the 'yaw'. Here, then is reason to expect an even stronger contribution to the dynamic machine performance, one that was not embraced by the calculation of the steady-state situation.

Given the above explanation of the energy source, the structural features which are the subject of this invention will now be described.

The 'yawing' action is depicted in **Fig.3**, which depicts how magnetic flux navigates a right-angled bend in a magnetic core upon passage through an air gap. By over-simplification it is assumed that the core has a crystal structure that has a preferred axis of magnetisation along the broken line path. With no air gap, the current needed by a magnetising winding has only to provide enough magnetomotive force to overcome the effects of non-magnetic inclusions and impurities in the core substance and very high magnetic permeabilities can apply. However, as soon as the air gap develops, this core substance has to find a way of setting up magnetomotive force in regions extending away from the locality of the magnetising winding. It cannot do this unless its effect is so powerful that the magnetic flux throughout the magnetic circuit through the core substance is everywhere deflected from alignment with a preferred easy axis of magnetisation. Hence the flux vectors depicted by the arrows move out of alignment with the broken line shown.

There is a 'knock-on' effect progressing all the way around the core from the seat of the magnetising winding and, as already stated, this harnesses the intrinsic ferromagnetic power that, in a system with no air gap, could only be affected by magnetisation above the knee of the B-H curve. Magnetic flux rotation occurs above that knee, whereas in an ideal core the magnetism develops with very high permeability over a range up to that knee, because it needs very little power to displace a magnetic domain wall sideways and promote a 900 or a1800 flux reversal. Indeed, one can have a magnetic permeability of 10,000 below the knee and 100 above the knee, the latter reducing progressively until the substance saturates magnetically.

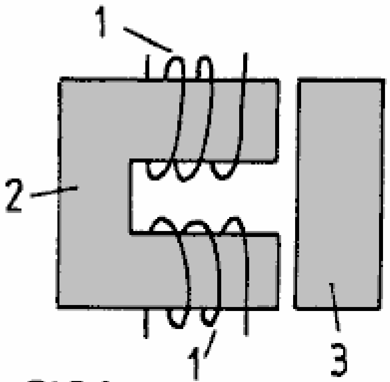

FIG.2

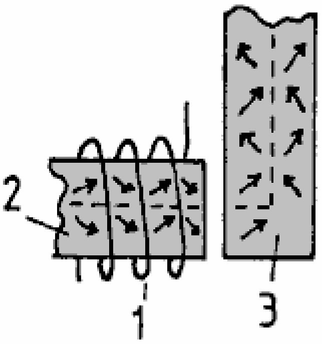

FIG.3

In the situation depicted in **Fig.2** and **Fig.3** the field strength developed by the magnetising windings **1** on magnetic core **2** has to be higher, the greater the air gap, in order to achieve the same amount of magnetisation as measured by the voltage induced in a winding (not shown) on the bridging member **3**. However, by virtue of that air gap there is potential for harnessing energy supplied to that air gap by the intrinsic zero-point field that accounts for the magnetic permeability being over unity and here one can contemplate very substantial excess energy potential, given incorporation in a machine design which departs from convention.

One of the applicants has built an operative test machine which is configured as depicted schematically in **Fig.4**. The machine has been proved to deliver substantially more mechanical power output than is supplied as electrical input, as much as a ratio of 7:1 in one version, and it can act regeneratively to produce electrical power.

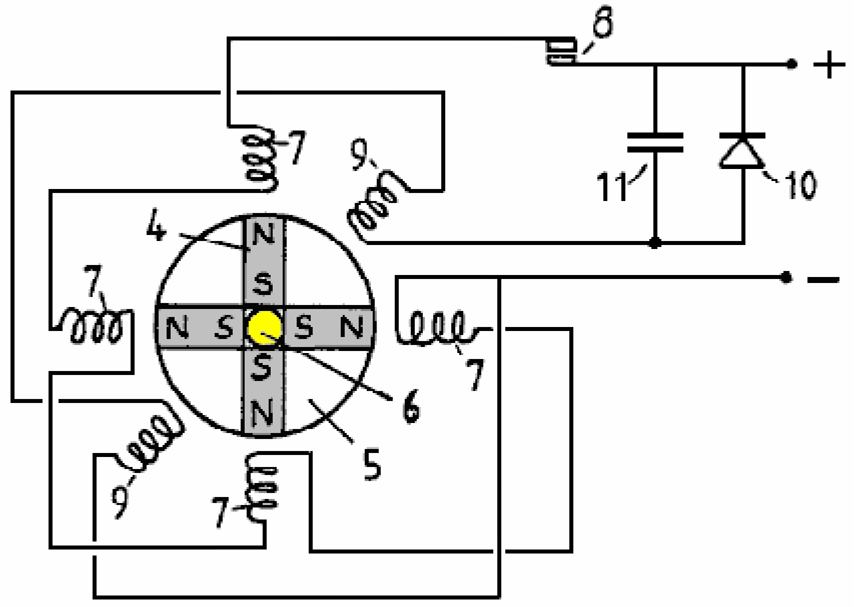

FIG. 4

What is shown in **Fig.4** is a simple model designed to demonstrate the principle of operation. It comprises a rotor in which four permanent magnets **4** are arrayed to form four poles. The magnets are bonded into four sectors of a non-magnetic disc **5** using a high density polyurethane foam filler and the composite disc is then assembled on a brass spindle **6** between a split flange coupling. Not shown in the figure is the structure holding the spindle vertically in bearings or the star wheel commutator assembly attached to the upper shaft of the spindle.

Note that the magnets present north poles at the perimeter of the rotor disc and that the south poles are held together by being firmly set in the bonding material. A series of four stator poles were formed using magnetic cores from standard electromagnetic relays are were positioned around the rotor disc as shown. The magnetising windings **7** on these cores are shown to be connected in series and powered through commutator contacts **8** by a DC power supply. Two further stator cores formed by similar electromagnetic relay components are depicted by their windings **9** in the intermediate angle positions shown and these are connected in series and connected to a rectifier **10** bridged by a capacitor **11**.

The rotor spindle **6** is coupled with a mechanical drive (not shown) which harnesses the torque developed by the motor thus formed and serves as a means for measuring output mechanical power delivered by the machine.

In operation, assuming that the rotor poles are held initially off-register with the corresponding stator poles and the hold is then released, the strong magnetic field action of the permanent magnets will turn the rotor to bring the stator and rotor poles into register. A permanent magnet has a strong attraction for soft iron and so this initial impulse of rotation is powered by the potential energy of the magnets.

Now, with the rotor acting as a flywheel and having inertia it will have a tendency to over-shoot the in-register pole position and that will involve a reverse attraction with the result that the rotor will oscillate until damping action brings it to rest. However, if the contacts of the commutating switch are closed as the poles come

The commutating switch **8** needs only to be closed for a limited period of angular travel following the top dead centre in-register position of the stator and rotor poles. The power supplied through that switch by those pulses will cause the rotor to continue rotating and high speeds will be achieved as the machine develops its full motor function.

Tests on such a machine have shown that more mechanical power can be delivered than is supplied electrically by the source powering the action through the commutating switch. The reason for this is that, whereas the energy in the air gap between rotor and stator poles which is tapped mechanically as the poles come into register is provided by the intrinsic power of the ferromagnet, a demagnetising winding on the part of the core system coupled across that air gap needs very little power to eliminate the mechanical force acting across that air gap. Imagine such a winding on the bridging member shown in **Fig.2**. The action of current in that winding, which sits astride the 'yawing' flux in that bridging member well removed from the source action of the magnetising windings **1**, is placed to be extremely effective in resisting the magnetising influence communicated from a distance. Hence very little power is needed to overcome the magnetic coupling transmitted across the air gap.

Although the mutual inductance between two spaced-apart magnetising windings has a reciprocal action, regardless of which winding is primary and which is secondary, the action in the particular machine situation being described involves the 'solenoidal' contribution represented by the 'yawing' ferromagnetic flux action. The latter is not reciprocal inasmuch as the flux ‘yaw' depends on the geometry of the system. A magnetising winding directing flux directly across an air gap has a different influence on the action in the ferromagnetic core from one directing flux lateral to the air gap and there is no reciprocity in this action.

In any event, the facts of experiment do reveal that, owing to a significant discrepancy in such mutual interaction, more mechanical power is fed into the rotor than is supplied as input from the electrical source.

This has been further demonstrated by using the two stator windings **9** to respond in a generator sense to the passage of the rotor poles. An electrical pulse is induced in each winding by the passage of a rotor pole and this is powered by the inertia of the rotor disc **5**. By connecting the power so generated, to charge the capacitor **11,** the DC power supply can be augmented to enhance the efficiency even further.

Indeed, the machine is able to demonstrate the excess power delivery from the ferromagnetic system by virtue of electrical power generation charging a battery at a greater rate than a supply battery is discharged.

This invention is concerned with a practical embodiment of the motor-generator principles just described and aims, in its preferred aspect, to provide a robust and reliable machine in which the tooth stresses in the rotor poles, which are fluctuating stresses communicating high reluctance drive torque, are not absorbed by a ceramic permanent magnet liable to rupture owing to its brittle composition.

Another object is to provide a structure which can be dismantled and reassembled easily to replace the permanent magnets, but an even more important object is that of minimising the stray leakage flux oscillations from the powerful permanent magnets. Their rotation in the device depicted in **Fig.4** would cause excessive eddy-current induction in nearby metal, including that of the machine itself, and such effects are minimised if the flux changes are confined to paths through steel laminations and if the source flux from the magnets has a symmetry or near symmetry about the axis of rotation.

Thus, the ideal design with this in mind is one where the permanent magnet is a hollow cylinder located on a non-magnetic rotor shaft, but, though that structure is within the scope of this invention, the machine described will utilise several separate permanent magnets approximating, in function, such a cylindrical configuration.

Referring to **Fig.4**, it will further be noted that the magnetic flux emerging from the north poles will have to find its way along leakage paths through air to re-enter the south poles. For periods in each cycle of machine operation the flux will be attracted through the stator cores, but the passage through air is essential and so the power of the magnets is not used to full advantage and there are those unwanted eddy-current effects.

To overcome this problem the invention provides for two separate rotor sections and the stator poles become bridging members, which with optimum design, allow the flux from the magnets to find a route around a magnetic circuit with minimal leakage through air as the flux is directed through one or other pairs of air gaps where the torque action is developed.

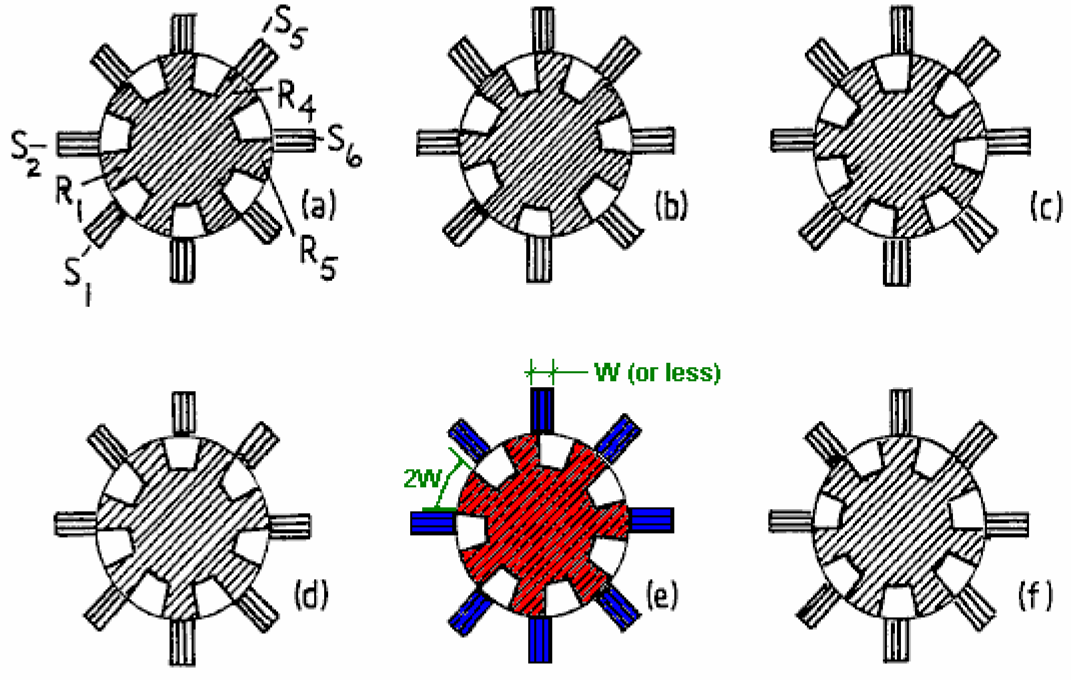

FIG.5

Reference is now made to **Fig.5** and the sequence of rotor positions shown. Note that the stator pole width can be significantly smaller that that of the rotor poles. Indeed, for operation using the principles of this invention, it is advantageous for the stator to have a much smaller pole width so as to concentrate the effective pole region. A stator pole width of half that of the rotor is appropriate but it may be even smaller and this has the secondary advantage of requiring smaller magnetising windings and so saving on the loss associated with the current circuit.

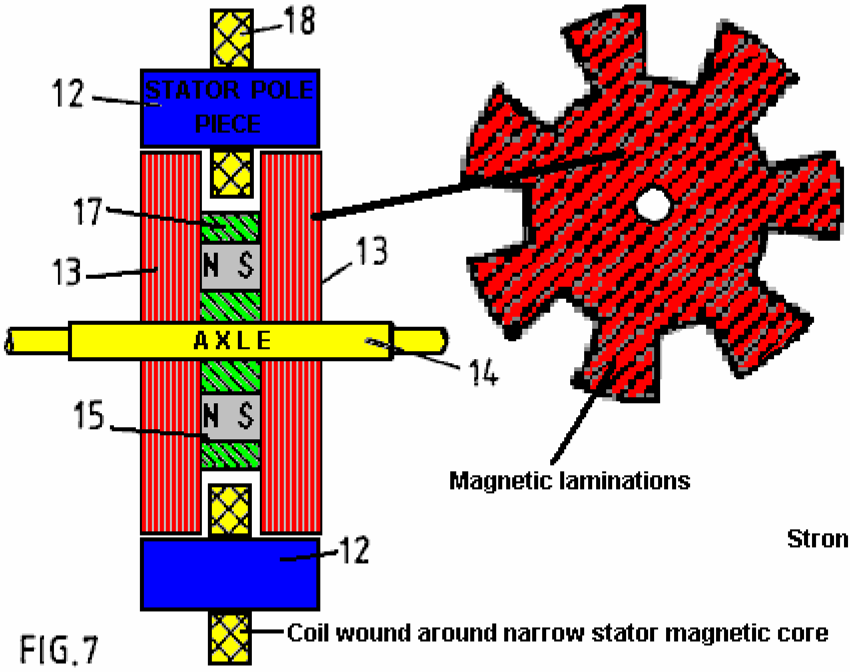

FIG.7

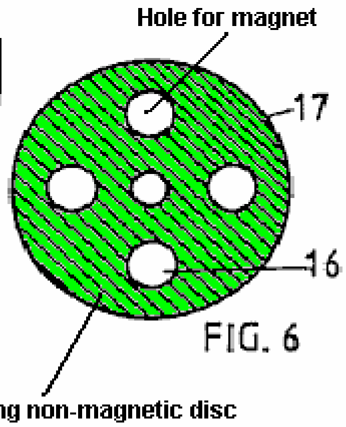

FIG. 6

The stator has eight pole pieces formed as bridging members **12**, more clearly represented in **Fig.7**, which shows a sectional side view through two rotor sections **13** axially spaced on a rotor shaft **14**. There are four permanent magnets **15** positioned between these rotor sections and located in apertures **16** in a disc **17** of a non-magnetic substance of high tensile strength, the latter being shown in **Fig.6**. The rotor sections are formed from disc laminations of electrical steel which has seven large teeth, the salient poles. Magnetising windings **18** mounted on the bridging members **12** constitute the system governing the action of the motor-generator being described.

The control circuitry is not described as design of such circuitry involves ordinary skill possessed by those involved in the electrical engineering art.

It suffices, therefore, to describe the merits of the structural design configuration of the core elements of the machine. These concern principally the magnetic action and, as can be imagined from **Fig.7**, the magnetic flux from the magnets enters the rotor laminations by traversing the planar faces of the laminations and being deflected into the plane of the laminations to pass through one or other of the stator pole bridging members, returning by a similar route through the other rotor.

By using eight stator poles and seven rotor poles, the latter having a pole width equal to half the pole pitch in an angular sense, it will be seen from **Fig.5**, that there is always a flux passage across the small air gap between stator and rotor poles. However, as one pole combination is in-register the diametrically-opposed pole combinations are out-of register.

As described by reference to **Fig.4** the operation of the machine involves allowing the magnet to pull stator and rotor poles into register and then, as they separate, pulsing the winding on the relevant stator member to demagnetise that member. In the **Fig.4** system, all the stator magnetising windings were pulsed together, which is not an optimum way in which to drive a multi-pole machine.

In the machine having the pole structure with one less rotor pole than stator poles (or an equivalent design in which there is one less stator pole than rotor poles) this pulsing action can be distributed in its demand on the power supply, and though this makes the commutation switch circuit more expensive the resulting benefit outweighs that cost. However, there is a feature of this invention by which that problem can be alleviated if not eliminated.

Suppose that the rotor has the position shown in **Fig.5(a)** with the rotor pole denoted **R1** midway between stator poles **S1** and **S2** and imagine that this is attracted towards the in-register position with stator pole **S2**. Upon reaching that in-register position, as shown in **Fig.5(c)**, suppose that the magnetising winding of stator pole **S2** is excited by a current pulse which is sustained until the rotor reaches the **Fig.5(e)** position.

The combination of these two actions will have imparted a forward drive impulse powered by the permanent magnet in the rotor structure and the current pulse which suppresses braking action will have drawn a smaller amount of energy from the electrical power source which supplies it. This is the same process as was described by reference to **Fig.4**.

However, now consider the events occurring in the rotor action diametrically opposite that just described. In the **Fig.5(a)** position rotor pole **R4** has come fully into register with stator pole **S5** and so stator pole **S5** is ready to be demagnetised. However, the magnetic coupling between the rotor and stator poles is then at its strongest. Note, however, that in that **Fig.5(a)** position **R5** is beginning its separation from stator poles and the magnetising winding of stator pole **S6** must then begin draw power to initiate demagnetisation. During that following period of pole separation the power from the magnet is pulling **R1** and **S2** together with much more action than is needed to generate that current pulse needed to demagnetise **S6**. It follows, therefore, that, based on the research findings of the regenerative excitation in the test system of **Fig.4**, the series connection of the magnetising windings on stators **S2** and **S6** will, without needing any commutative switching, provide the regenerative power needed for machine operation.

The complementary action of the two magnetising windings during the pole closure and pole separation allows the construction of a machine which, given that the zero-point vacuum energy powering the ferromagnet is feeding input power, will run on that source of energy and thereby cool the sustaining field system.

There are various design options in implementing what has just been proposed. Much depends upon the intended use of the machine. If it is intended to deliver mechanical power output the regenerative electrical power action can all be used to power the demagnetisation with any surplus contributing to a stronger drive torque by reversing the polarity of the stator poles during pole separation.

If the object is to generate electricity by operating in generator mode then one could design a machine having additional windings on the stator for delivering electrical power output. However, it seems preferable to regard the machine as a motor and maximise its efficiency in that capacity whilst using a mechanical coupling to an alternator of conventional design for the electrical power generation function.

In the latter case it would still seem preferable to use the self-excitation feature already described to reduce commutation switching problems.

The question of providing for machine start-up can be addressed by using a separate starter motor powered from an external supply or by providing for current pulsing limited to, say, two stator poles. Thus, for example, with the eight stator pole configuration, the cross-connected magnetising windings could be limited to three stator pairs, with two stator magnetising windings left free for connection to a pulsed external supply source.

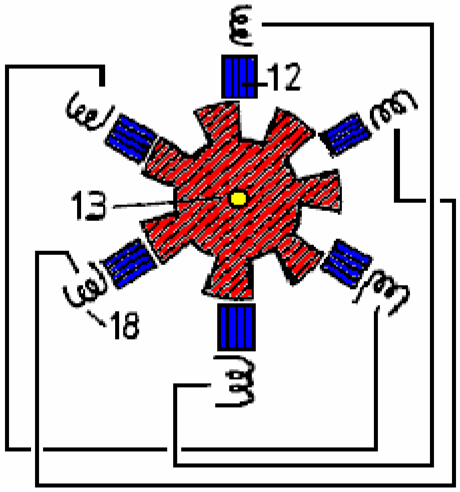

FIG.8

If the latter feature were not required, then the stator magnetising windings would all be connected in pairs on a truly diametrically opposite basis. Thus **Fig.8** shows a rotor-stator configuration having six stator poles interacting with seven rotor poles and stator magnetising windings linked together in pairs.

The invention, therefore, offers a wide range of implementation possibilities, which, in the light of this disclosure will become obvious to persons skilled in the electrical engineering art, all based, however, on the essential but simple principle that a rotor has a set of poles of common polarity which are attracted into register with a set of stator poles that are suppressed or reversed in polarity magnetically during pole separation. The invention, however, also offers the important feature of minimising commutation and providing further for a magnetic flux closure that minimises the leakage flux and fluctuations of leakage flux and so contributes to efficiency and high torque performance as well as durability and reliability of a machine incorporating the invention.

It is noted that although a machine has been described which uses two rotor sections it is possible to build a composite version of the machine having several rotor sections. In the eventuality that the invention finds use in very large motor-generator machines the problem of providing very large magnets can be overcome by a design in which numerous small magnets are assembled. The structural concept described by reference to **Fig.6** in providing locating apertures to house the magnets makes this proposal highly feasible. Furthermore, it is possible to replace the magnets by a steel cylinder and provide a solenoid as part of the stator structure and located between the rotor sections. This would set up an axial magnetic field magnetising the steel cylinder and so polarising the rotor. However, the power supplied to that solenoid would detract from the power generated and so such a machine would not be as effective as the use of permanent magnets such as are now available.

Nevertheless, should one see significant progress in the development of warm superconductor materials, it may become feasible to harness the self-generating motor-generator features of the invention, with its self-cooling properties, by operating the device in an enclosure at low temperatures and replacing the magnets by a superconductive stator supported solenoid.

CLAIMS

1. An electrodynamic motor-generator machine comprising a stator configured to provide a set of stator poles, a corresponding set of magnetising windings mounted on the stator pole set, a rotor having two sections each of which has a set of salient pole pieces, the rotor sections being axially spaced along the axis of rotation of the rotor, rotor magnetisation means disposed between the two rotor sections arranged to produce a unidirectional magnetic field which magnetically polarises the rotor poles, whereby the pole faces of one rotor section all have a north polarity and the pole faces of the other rotor section all have a south polarity and electric circuit connections between an electric current source and the stator magnetising windings arranged to regulate the operation of the machine by admitting current pulses for a duration determined according to the angular position of the rotor, which pulses have a direction tending to oppose the polarisation induced in the stator by

the rotor polarisation as stator and rotor poles separate from an in-register position, whereby the action of the rotor magnetisation means provides a reluctance motor drive force to bring stator and rotor poles into register and the action of the stator magnetisation windings opposes the counterpart reluctance braking effect as the poles separate.

2. A motor-generator according to claim 1, wherein the circuit connecting the electric current source and the stator magnetising windings is designed to deliver current pulses which are of sufficient strength and duration to provide demagnetisation of the stator poles as the stator and rotor poles separate from an in-register position.

3. A motor-generator according to claim 1, wherein the circuit connecting the electric current source and the stator magnetising windings is designed to deliver current pulses which are of sufficient strength and duration to provide a reversal of magnetic flux direction in the stator poles as the stator and rotor poles separate from an in-register position, whereby to draw on power supplied from the electric current source to provide additional forward drive torque.

4. A motor-generator according to claim 1, wherein the electric current source connected to a stator magnetising winding of a first stator pole comprises, at least partially, the electrical pulses induced in the stator magnetising winding of a different second stator pole, the stator pole set configuration in relation to the rotor pole set configuration being such that the first stator pole is coming into register with a rotor pole as the second stator pole separates from its in-register position with a rotor pole.

5. A motor-generator according to claim 1, wherein the number of poles in a set of stator poles is different from the number of rotor poles in each rotor section.

6. A motor-generator according to claim 1, wherein the stator configuration provides pole pieces which are common to both rotor sections in the sense that when stator and rotor poles are in-register the stator pole pieces constitute bridging members for magnetic flux closure in a magnetic circuit including that of the rotor magnetisation means disposed between the two rotor sections.

7. A motor-generator according to claim 6, wherein the number of poles in a set of stator poles and the number of rotor poles in each section do not share a common integer factor and the number of rotor poles in one rotor section is the same as that in the other rotor section.

8. A motor-generator according to claim 7, wherein the number of poles in a stator set and the number of poles in a rotor section differs by one and the pole faces are of sufficient angular width to assure that the magnetic flux produced by the rotor magnetisation means can find a circuital magnetic flux closure route through the bridging path of a stator pole and through corresponding rotor poles for any angular position of the rotor.

9. A motor-generator according to claim 8, wherein each rotor section comprises seven poles.

10. A motor-generator according to claim 7, wherein there are N rotor poles in each rotor section and each has an angular width that is 180/N degree of angle.

11. A motor-generator according to claim 7, wherein the stator pole faces have an angular width that is no greater than half the angular width of a rotor pole.

12. A motor-generator according to claim 1, wherein the rotor sections comprise circular steel laminations in which the rotor poles are formed as large teeth at the perimeter, and the rotor magnetisation means comprise a magnetic core structure the end faces of which abut two assemblies of such laminations forming the two rotor sections.

13. A motor-generator according to claim 1 in which the rotor magnetisation means comprises at least one permanent magnet located with its polarisation axis parallel with the rotor axis.

14. A motor-generator according to claim 13, wherein an apertured metal disc that is of a non-magnetisable substance is mounted on a rotor shaft and positioned intermediate the two rotor sections and each aperture provides location for a permanent magnet, whereby the centrifugal forces acting on the permanent magnet as the rotor rotates are absorbed by the stresses set up in the disc.

15. A motor-generator according to claim 1, having a rotor mounted on a shaft that is of a non-magnetisable substance, whereby to minimise magnetic leakage from the rotor magnetising means.

16. An electrodynamic motor-generator machine comprising a stator configured to provide a set of stator poles, a corresponding set of magnetising windings mounted on the stator pole set, a rotor having two sections each of which has a set of salient pole pieces, the rotor sections being axially spaced along the axis of rotation of the

rotor, rotor magnetisation means incorporated in the rotor structure and arranged to polarise the rotor poles, whereby the pole faces of one rotor section all have a north polarity and the pole faces of the other rotor section all have a south polarity and electric circuit connections between an electric current source and the stator magnetising windings arranged to regulate the operation of the machine by admitting current pulses for a duration determined according to the angular position of the rotor, which pulses have a direction tending to oppose the polarisation induced in the stator by the rotor polarisation as stator and rotor poles separate from an in-register position, whereby the action of the rotor magnetisation means provides a reluctance motor drive force to bring stator and rotor poles into register and the action of the stator magnetisation windings opposes the counterpart reluctance braking effect as the poles separate.

17. A motor-generator according to claim 16, wherein the electric current source connected to a stator magnetising winding of a first stator pole comprises, at least partially, the electrical pulses induced in the stator magnetising winding of a different second stator pole, the stator pole set configuration in relation to the rotor pole set configuration being such that the first stator pole is coming into register with a rotor pole as the second stator pole separates from its in-register position with a rotor pole.

Amendments to the claims have been filed as follows 1. An electrodynamic motor-generator machine comprising a stator configured to provide a set of stator poles, a corresponding set of magnetising windings mounted on the stator pole set, a rotor having two sections each of which has a set of salient pole pieces, the rotor sections being axially spaced along the axis of rotation of the rotor, rotor magnetisation means disposed between the two rotor sections arranged to produce a unidirectional magnetic field which magnetically polarises the rotor poles, whereby the pole faces of one rotor section all have a north polarity and the pole faces of the other rotor section all have a south polarity and electric circuit connections between an electric current source and the stator magnetising windings arranged to regulate the operation of the machine by admitting current pulses for a duration determined according to the angular position of the rotor, which pulses have a direction tending to oppose the polarisation induced in the stator by the rotor polarisation as stator and rotor poles separate from an in-register position, whereby the action of the rotor magnetisation means provides a reluctance motor drive force to bring stator and rotor poles into register and the action of the stator magnetisation windings opposes the counterpart reluctance braking effect as the poles separate, the machine being characterised in that the stator comprises separate ferromagnetic bridging members mounted parallel with the rotor axis, the ends of which constitute stator poles and the core sections of which provide closure paths operative when the stator and rotor poles are in register to confine magnetic flux developed by the rotor magnetisation means to a stator flux path of restricted cross-section disposed anti-parallel with the unidirectional magnetic field polarisation axis of the rotor magnetising means 2. A motor-generator according to claim 1, wherein the circuit connecting the electric current source and the stator magnetising windings is designed to deliver current pulses which are of sufficient strength and duration to provide demagnetisation of the stator poles as the stator and rotor poles separate from an in-register position.

3. A motor-generator according to claim 1, wherein the circuit connecting the electric current source and the stator magnetising windings is designed to deliver current pulses which are of sufficient strength and duration to provide a reversal of magnetic flux direction in the stator poles as the stator and rotor poles separate from an in-register position, whereby to draw on power supplied from the electric current source to provide additional forward drive torque.

4. A motor-generator according to claim 1, wherein the electric current source connected to a stator magnetising winding of a first stator pole comprises, at least partially, the electrical pulses induced in the stator magnetising winding of a different second stator pole, the stator pole set configuration in relation to the rotor pole set configuration being such that the first stator pole is coming into register with a rotor pole as the second stator pole separates from its in-register position with a rotor pole.

5. A motor-generator according to claim 1, wherein the number of poles in a set of stator poles is different from the number of rotor poles in each rotor section.

6. A motor-generator according to claim 1, wherein the stator configuration provides pole pieces which are common to both rotor sections in the sense that when stator and rotor poles are in-register the stator pole pieces constitute bridging members for magnetic flux closure in a magnetic circuit including that of the rotor magnetisation means disposed between the two rotor sections.

7. A motor-generator according to claim 6, wherein the number of poles in a set of stator poles and the number of rotor poles in each section do not share a common integer factor and the number of rotor poles in one rotor section is the same as that in the other rotor section.

WILLIAM BARBAT: POWER GENERATOR

Patent Application US 2007/0007844 A1 11th January 2007 Inventor: William N. Barbat

SELF-SUSTAINING ELECTRIC POWER GENERATOR UTILISING ELECTRONS OF LOW INERTIAL MASS TO MAGNIFY INDUCTIVE ENERGY

This patent application shows a very neat, self-powered electrical generator with a theoretical output of anything up to a COP of 59 when using cadmium selenide. The discussion of the theoretical aspects of the design includes a large amount of historical information and it covers the origin of the "law" of Conservation of Energy which, in spite of being incorrect, has been for decades, a major obstacle to the scientific development of free-energy devices.

Filed: 6th March 2006
Assignee: Levitronics, Inc.
Provisional application No. 60/697,729 filed on 8th July 2005

ABSTRACT

Electrical oscillations in a metallic "sending coil" radiate inductive photons toward one or more "energy-magnifying coils" comprised of a photoconductor or doped semiconductor coating a metallic conductor, or comprised of a superconductor. Electrons of low inertial mass in the energy-magnifying coil(s) receive from the sending coil, a transverse force having no in-line backforce, which exempts this force from the energy-conservation rule. The low-mass electrons in the energy-magnifying coil(s) receive increased acceleration proportional to normal electron mass divided by the lesser mass. Secondarily radiated inductive-photon energy is magnified proportionally to the electrons' greater acceleration, squared, e.g., the inductive-energy-magnification factor of CdSe photoelectrons with 0.13 x normal electron mass is 59 times. Magnified inductive-photon energy from the energy-magnifying coil(s) induces oscillating electric energy in one or more metallic "output coil(s)". The electric energy output exceeds the energy input if more of the magnified photon induction energy is directed toward the output coil(s) than is directed as a counter force to the sending coil. After an external energy source initiates the oscillations, feedback from the generated surplus energy makes the device a self-sustaining generator of electric power for useful purposes.

CROSS REFERENCE TO RELATED APPLICATION

This application corresponds to, and claims the benefit under 35 U.S.C. 119(e), of U.S. provisional application No. 60/697,729, filed on 8th July 2005, incorporated herein by reference in its entirety.

FIELD

This disclosure introduces a technical field in which practical electrical energy is created in accordance with the overlooked exception to the energy-conservation rule that Herman von Helmholtz described in his 1847 doctrine on energy conservation: "If . . . bodies possess forces which depend upon time and velocity, or which act in directions other than lines which unite each pair of material points, . . . then combinations of such bodies are possible in which force may be either lost or gained as infinitum". A transverse inductive force qualifies for Helmholtz's ad infinitum rule, but this force is not sufficient of itself to cause a greater energy output than input when applied to electrons of normal mass due to their unique charge-to-mass ratio. However, the increased acceleration of conduction electrons of less-then-normal inertial mass, as occurs in photoconductors, doped semiconductors, and superconductors, is proportional to the normal electron mass divided by the low electron mass, and the magnification of harnessable inductive energy is proportional to the square of the greater relative acceleration.

BACKGROUND

Magnetic force also satisfies Helmholtz's exemption to the energy-conservation rule because magnetic force is transverse to the force that causes it, and magnetic force is determined by the "relative velocity" (i.e. perpendicular to the connecting line) between electric charges. Magnification of magnetic force and energy was demonstrated by E. Leimer (1915) in the coil of a speaker phone and in the coil of a galvanometer when he irradiated a radio antenna-wire with radium. A 10 milligram, linear radium source produced a measured 2.6 fold increase in electrical current in the antenna wire in comparing inaudible radio reception without radium to audible reception with radium. This represented a $(2.6)^2 = 7$ times increase in electrical energy flowing through the respective wire coils. The possibility of this enhanced reception being attributed to a person's body holding the unit of radium to the wire was eliminated by Leimer's additional observation that whenever the orientation of the small radium unit was changed to approximately 30 degrees relative to the wire, the energy enhancement ceased.

Applicant has deduced that Leimer's energy magnification was most likely due to low-mass electrons that were liberated and made conductive in the antenna by alpha radiation, which allowed these special electrons to be given a greater than normal acceleration by the received radio broadcast photons. Applicant has further deduced that such low-mass electrons must have originated in a thin-film coating of cupric oxide (CuO) on the antenna wire. CuO is a dull black polycrystalline semiconducting compound that develops in situ on copper and bronze wire in the course of annealing the wire in the presence of air. Such CuO coatings have been observed by Applicant on historical laboratory wire at the Science Museum at oxford University, U.K. and on copper house wire of that era in the U.S., indicating that CuO coatings were commonplace. In later years, annealing has taken place under conditions that prevent most oxidation. This is followed by acid treatment to remove any remaining oxides, leaving shiny wire.

The same year that the English translation of Leimer's paper appeared in *Scientific American*, 16-year old Alfred M. Hubbard of Seattle, Washington, reportedly invented a fuelless generator, which he later admitted, employed radium. Applicant interprets this as implying that Leimer's energy-magnification was utilised by Hubbard with feedback to make it self-sustaining. Three years later, Hubbard publicly demonstrated a relatively advanced fuelless generator that illuminated a 20-watt incandescent bulb (Anon. 1919a). A reputable physics professor from Seattle College, who was intimately familiar with Hubbard's device (but not at liberty to disclose its construction details), vouched for the integrity of the fuelless generator and declared that it was not a storage device, but he did not know why it worked (Anon. 1919b). Because Hubbard initially had no financial means of his own, it is likely that the professor had provided Hubbard with the use of the expensive radium initially and thereby witnessed the inventing process in his own laboratory.

Newspaper photos (Anon. 1920a) of a more impressive demonstration of Hubbard's fuelless generator, show a device described as 14 inches (36 cm) long and 11 inches (28 cm) in diameter, connected by four heavy electrical cables to a 35 horsepower (26 kW) electric motor. The motor reportedly propelled an 18-foot open launch around a like at a speed of 8 to 10 knots (Anon. 1920b). The event was witnessed by a cautious news reporter who claims to have checked thoroughly for any wires that might have been connected to hidden batteries, by lifting the device and motor from the boat. Radioactive-decay energy can be eliminated as the main power source because about 10^8 times more radium than the entire world's supply would have been needed to equal Hubbard's reported electric energy output of 330 amperes and 124 volts.

Lester J. Hendershott of Pittsburgh, Pa., reportedly demonstrated a fuelless generator in 1928 that was claimed by Hubbard to be a copy of his own device (1928h). The president of Stout Air services, William B. Stout, who also designed the Ford Trimotor aeroplane, reported (1928b): "The demonstration was very impressive. It was actually uncanny.... The small model appeared to operate exactly as Hendershot explained it did". Also reportedly attesting to the operability of Hendershott's fuelless generator were Colonel Charles A. Lindbergh and Major Thomas Lanphier of the U.S. Air Corps (1928a, et seq.), and Lanphier's troops reportedly assembled a working model of his device.

To the Applicant's best knowledge, the only depiction that was made public of the interior components of any of these reported generators consists of a sketchy drawing (Bermann 1928h) of Hubbard's apparatus similar in size to the device shown in his 1919 demonstration. It depicts a complex set of parallel coils measuring 6 inches (15 cm) in length and 4.5 inches (11.4 cm) in overall diameter. Four leads of insulated wire, with the insulation peeled back, are shown coming out of the end of the device. What those four wires were connected to internally was not shown. Hubbard's description of the internal arrangement of coils in the device generally matches the drawing (Anon. 1920a): "It is made up of a group of eight electromagnets, each with primary and secondary windings of copper wire, which are arranged around a large steel core. The core likewise has a single winding. About the entire group of cells is a secondary winding". Nothing was reported or depicted about how components functioned with each other, or how much radium was used and where the radium was positioned. The only connectors visible on the drawing were between the outer windings of the eight electromagnet coils. These connectors show that the direction of the windings alternated between clockwise and counterclockwise on adjacent coils, so that the polarity of each electromagnet would have been opposite to that of it's adjacent neighbours.

If the Hubbard and Hendershot devices actually operated as reported, they apparently never attained acceptance or commercial success. Assuming the devices actually worked, their lack of success may have been largely financially or supply based, or both, compounded with scepticism from believers in the energy-conservation doctrine. How much radium was employed by Hubbard in his larger generator can only be guessed at, but assuming a typical laboratory radium needle containing 10 milligrams of radium was used, that amount would have cost $900 in 1920, dropping to $500 in 1929. That much radium in a fuelless generator would have cost as much as an inexpensive automobile in the 1920s. Possibly much more radium was used than 10 milligrams.

In 1922, when the Radium Company of America of Pittsburgh, Pa., reportedly discontinued its work with Hubbard on his invention (1928h), the entire world's supply of radium was only about 250 grams. With the extreme assumption that only 1 milligram of radium was needed per generator, less than 10% of a single year's production of autos in the US in the mid-1920s could have been supplied with such generators. Apparently Hendershott had tried to revive the technology by showing that the fuelless generator could extend the range of air flight indefinitely, but his technology never attracted a sponsor from any private, public or philanthropic entity.

U.S. Pat. No. 4,835,433 to Brown, superficially resembles the drawing of Hubbard's device. Brown's device appears to have the same number and essentially the same general arrangement of wire coils as Hubbard's generator, as nearly as can be understood from the newspaper articles depicting that device. Apparently, no information concerning either the Hubbard or Hendershot devices was considered during the prosecution of the '433 patent. Brown discusses the conversion of energy of radioactive decay products, principally alpha emissions, to electrical energy by amplifying electrical oscillations in a high-Q L-C circuit irradiated by radioactive materials. "During the absorption process, each alpha particle will collide with one or more atoms in the conductor, knocking electrons from their orbits and imparting some kinetic energy to the electrons in the conductor, thereby increasing its conductivity". (Col. 3, Line 68 to Col. 4, line 5). No claim was made by Brown, that the device employed a semiconductor or photoconductor that could have provided low-mass electrons for energy magnification.

Brown claimed an output of 23 amps at 400 volts, which is vastly greater than all the decay energy represented by his reported radioactive content of 1 milligram of radium that was surrounded by weakly radioactive uranium rods and thorium powder. Powered thorium is highly pyrophoric, so it is typically sealed in a nitrogen atmosphere to prevent spontaneous combustion. In his device, Brown reportedly confined the thorium in cardboard without any mention of sealing out air. This condition would have invited a meltdown that could have been interpreted as massive out-of-control electrical production.

To the best of the Applicant's knowledge, no person other than the Applicant has ever indicated that the presence of cupric oxide on their wires could have provided energy magnification. If Hubbard's device actually did work, certain characteristics of its design are unexplainable by the Applicant, namely the use of four rather than two large electrical cables to connect his device to an electrical motor, and the use of alternating polarity instead of single-direction polarity in the orientation of the multiple coils surrounding a central coil. Applicant therefore believes that the specification herein sets forth original configurations of electrical-energy generators that have no known precedent.

SUMMARY

To address the needs for electrical generators which are capable of self-generating substantial amounts of electrical power in various environments, and which are portable as well as stationary, apparatus and methods are provided for magnifying an electrical input, and (with feedback) for generating usable electrical power indefinitely without fuel or other external energy source, except for starting. The apparatus utilises electrons of low effective mass, which receive greater acceleration than normal electrons in an amount that is inversely proportional to the effective mass. Applicant has determined that effective mass is the same as the electron's true inertial mass. The photon energy that is radiated when an electron is accelerated is proportional to the square of the acceleration, so the increase in radiated photon energy from an accelerated low-mass electron over the energy from a normal electron is equal to the inverse square of the effective mass, e.g. the calculated energy magnification provided by photoconducting electrons in cadmium selenide, with an electron effective mass of 0.13, is 59 times. The use of a transverse force, that lacks a direct back-force, to accelerate low-mass electrons in an oscillating manner, circumvents any equal-and-opposite force that would invoke the application of the energy-conservation law of kinetics and thermodynamics.

The various embodiments of the apparatus, which are configured either to continuously magnify an input of oscillating electric energy, or to serve as a self-sustaining electric generator, employ three principal components:

At least one sending coil

At least one energy-magnification coil, comprising a material that produces , in a "condition" low-mass electrons, and

At least one output coil.

It is desirable that the apparatus also includes a means for establishing the condition with respect to the energy-magnifying coil(s). Except where otherwise indicated in the remainder of this text, where the number of coils of a particular type is referred to in the singular, it will be understood that a plurality of coils of the respective type can alternatively be utilised.

Electrical oscillation in the sending coil, which is comprised of a metallic conductor, causes radiation of inductive photons from the sending coil. The energy-magnifying coil is situated in a position relative to the sending coil so as to receive inductive photons from the sending coil. The inductive photons radiating from electrical oscillations in the sending coil, convey a transverse force to the low-mass electrons in the energy-magnification coil with no back-force on the sending coil. The greater-than-normal accelerations which are produced in the low-mass electrons of the energy-magnifying coil, produce greater irradiation energy of inductive photons than normal.

The output coil is positioned so as to receive the magnified inductive-photon energy from the energy-magnifying coil. The inductive-photon energy received by the output coil, which is comprised of a metallic conductor, is converted into an oscillating electrical current of normal electrons. In order for the electrical output to exceed the electrical input, the output coil is situated in such a manner that it receives more of the magnified inductive-photon energy than that which is directed back against the sending coil to act as a back-force. This “energy leverage” causes the electrical energy output to exceed the electrical energy input.

By way of example, the energy-magnifying coil can comprise a superconducting material, wherein the “condition” is a temperature (e.g. a cryogenic temperature) at which the superconducting material exhibits superconducting behaviour characterised by production of low-mass electrons.

By way of another example, the energy-magnifying coil can comprise a photoconductive material, wherein the “condition” is a situation in which the photoconductive material is illuminated by a wavelength of photon radiation sufficient to cause the photoconductive material of the energy-magnifying coil to produce conduction electrons having low effective mass. In this latter example, the means for establishing the condition can comprise a photoconductor exciter (e.g. one or more LEDs) situated and configured to illuminate the photoconductive material of the energy-magnifying coil with the wavelength of photon radiation.

By way of yet another example, the “condition” is the presence of a particular dopant in a semiconductor that provides a low-mass electron as a charge carrier. Also, by way of example, the energy-magnifying coil can comprise a semiconductive element or compound that has been doped with a particular element or compound that makes it conductive of low-mass electrons without illumination by photon radiation other than by ambient photons.

Various apparatus embodiments comprise different respective numbers and arrangements of the principal components. The various embodiments additionally can comprise one or more of circuitry, energisers, shielding and other components to fulfill the object of providing a self-sustaining source of electrical power for useful purposes.

Also provided, are methods for generating an electrical current. In an embodiment of such a method, a first coil is energised with an electrical oscillation sufficient to cause the first coil to radiate inductive photons. At least some of the radiated inductive photons from the first coil are received by a second coil, called “the energy-magnifying coil”, comprising a material that produces low-mass electrons. The received inductive photons impart respective transverse forces to the low-mass electrons that cause the low-mass electrons to experience accelerations in the material which are greater than accelerations that otherwise would be experienced by normal free electrons experiencing the transverse forces.

Conduction of the accelerated low-mass electrons in the second coil, causes the second coil to produce a magnified inductive force. The magnified inductive force is received by a third coil which causes the third coil to produce an oscillating electrical output of normal conduction electrons which has greater energy than the initial oscillation. A portion of the oscillating electrical output is directed as feed-back from the third coil to the sending coil, so as to provide the electrical oscillation to the sending coil. This portion of the oscillating electrical current directed to the sending coil, desirably is sufficient to cause self-sustaining generation of inductive photons by the first coil without the need for any external energy source. The surplus oscillating electrical output from the third coil can be directed to a work loop.

The method can further comprise the step of starting the energisation of the first coil to commence generation of the oscillating electrical output. This “starting” step can comprise momentarily exposing the first coil to an external oscillating inductive force or for example, to an external magnetic force which initiates an electrical pulse.

The foregoing and additional features and advantages of the invention will be more readily apparent from the following detailed description, which proceeds with reference to the accompanying drawings.

BRIEF DESCRIPTION OF THE DRAWINGS

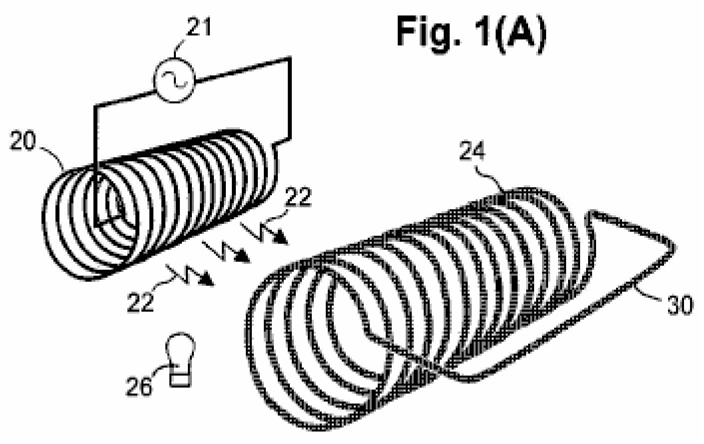

Fig.1A is a perspective view schematically depicting a sending coil in relationship to an energy-magnifying coil such that inductive photons from the sending coil, propagate to the energy-magnifying coil.

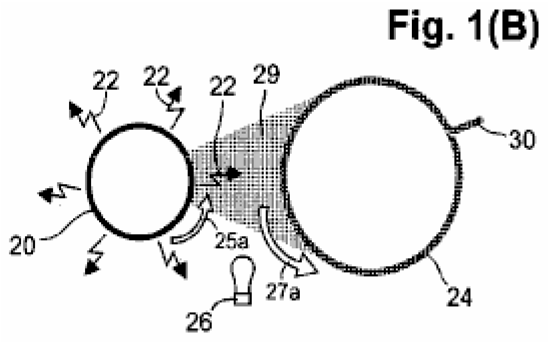

Fig.1B is a schematic end-view of the sending coil and energy-magnifying coil of **Fig.1A**, further depicting radiation of inductive photons from the sending coil and the respective directions of electron flow in the coils.

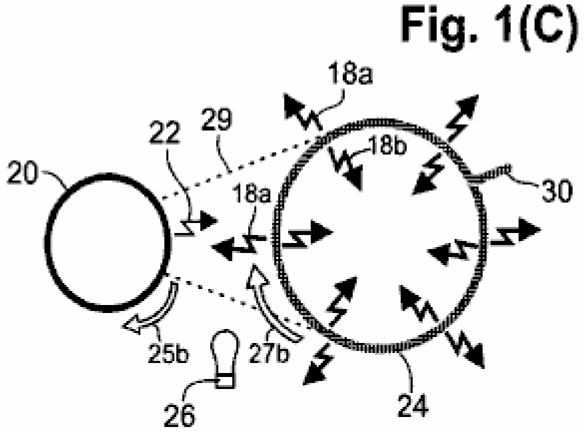

Fig.1C is a schematic end-view of the sending coil and energy-magnifying coil of **Fig.1A**, further depicting the production of inwardly-radiating and outwardly-radiating magnified inductive photons from the energy-magnifying coil.

Fig. 2(A)

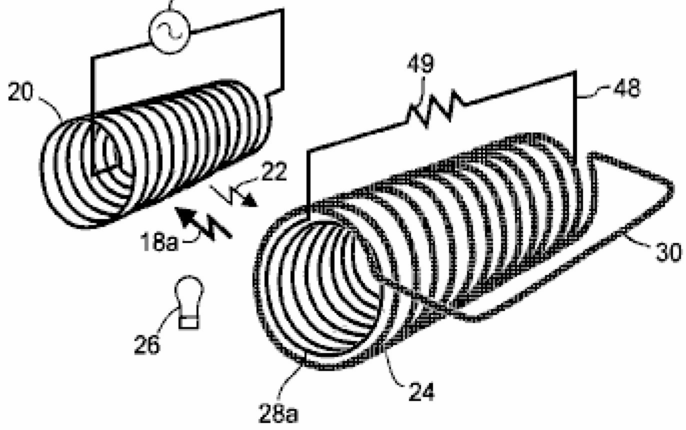

Fig.2A is a perspective view schematically showing an internal output coil, coaxially nested inside the energy-magnifying coil to allow efficient induction of the internal output coil by the energy-magnifying coil, wherein the induction current established in the internal output coil is used to power a load connected across the internal output coil.

Fig. 2(B)

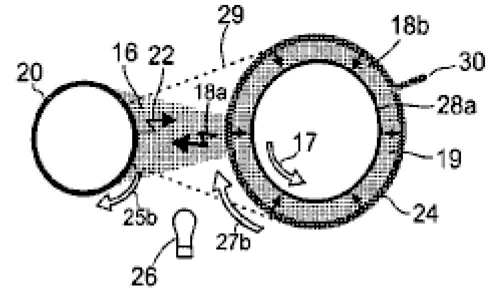

Fig.2B is a schematic end-view of the coils shown in **Fig.2A**, further depicting the greater amount of magnified inductive-photon radiation that is received by the external output coil in comparison to the lesser amount that is directed toward the sending coil to act as a back-force.

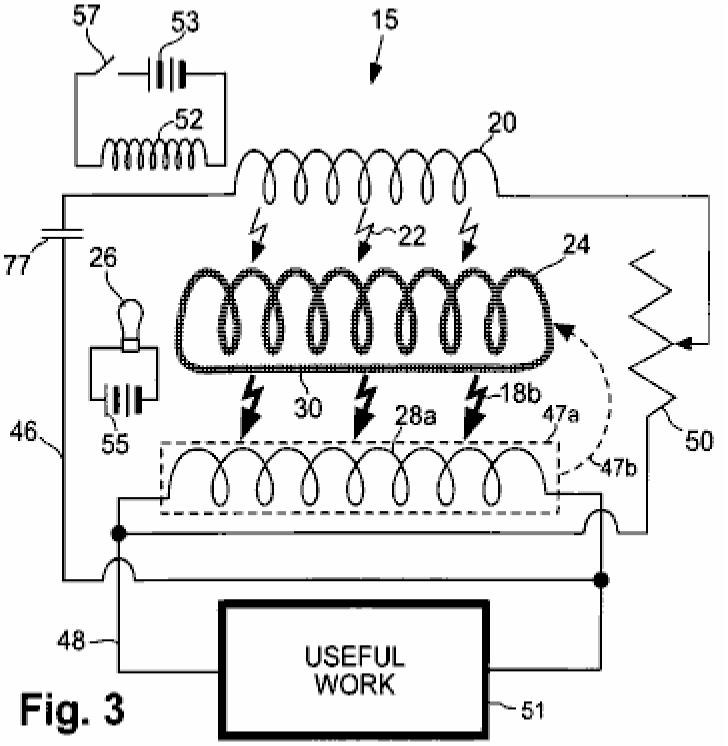

Fig. 3

Fig.3 is an electrical schematic diagram of a representative embodiment of a generating apparatus.

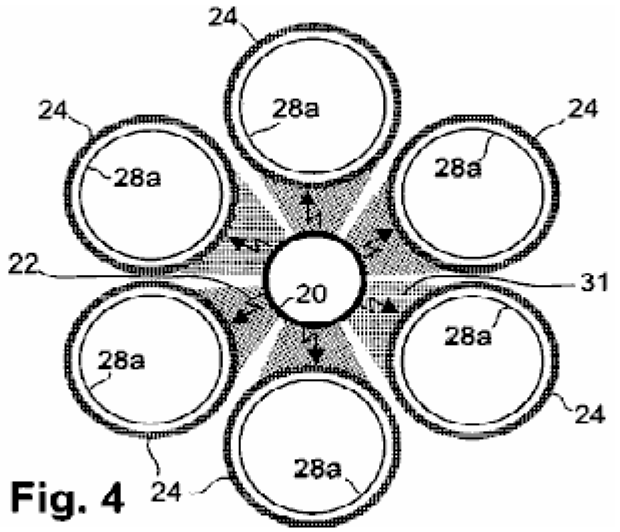

Fig. 4

Fig.4 is a schematic end-view of a representative embodiment, comprising a centrally disposed sending coil surrounded by six energy-magnifying coils, each having and axis which is substantially parallel to the axis of the sending coil. A respective internal output coil is coaxially nested inside each energy-magnifying coil, and the energy-magnifying coils are arranged so as to capture substantially all the inductive photons radiating from the sending coil.

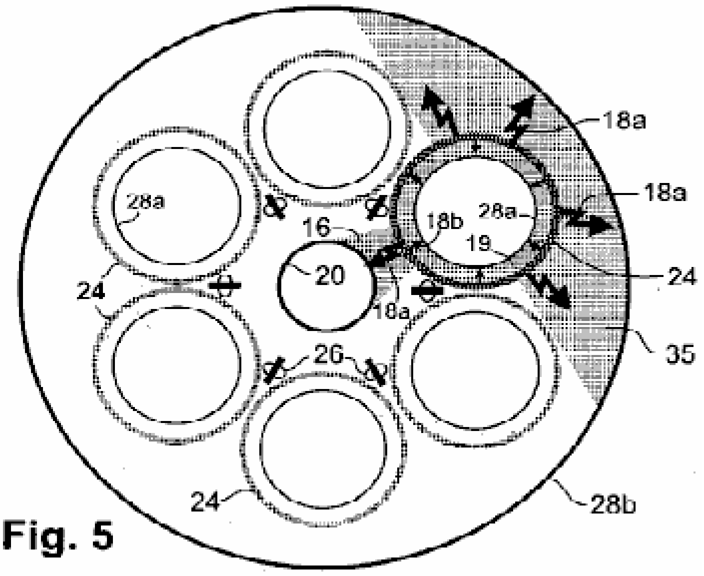

Fig. 5

Fig.5 is a schematic end-view of the embodiment of **Fig.4**, further including an external output coil situated coaxially with the sending coil and configured to surround all six energy-magnifying coils so as to capture outwardly-radiating inductive photons from the energy-magnifying coils. Also depicted is the greater amount of magnified inductive-photon radiation that is received by the internal output coils and the external output coil in comparison to the lesser amount of inductive-photon radiation that is directed towards the sending coil to act as a back-force. Also shown are the arrays of LEDs used for exciting the energy-magnifying coils to become photoconductive.

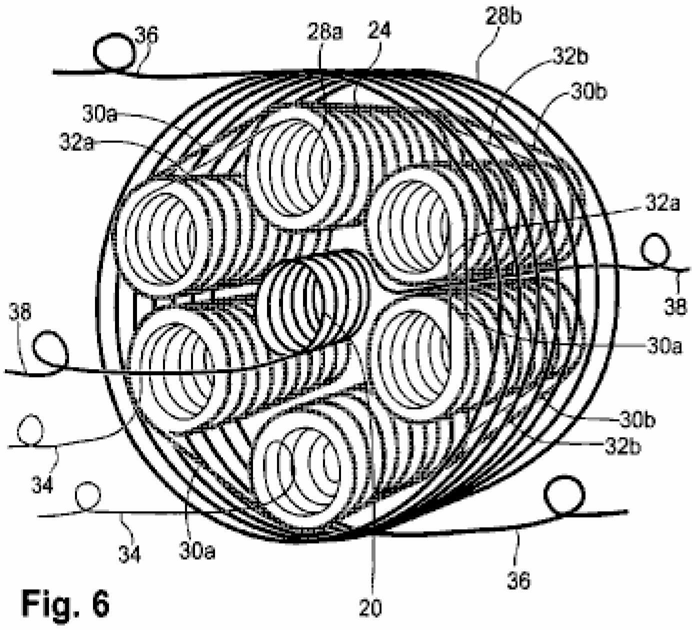

Fig. 6

Fig.6 is a perspective view of the embodiment of **Fig.4** and **Fig.5** but further depicting respective inter-coil connections for the energy-magnifying and internal output coils, as well as respective leads for the sending coil, internal output coils and external output coil.

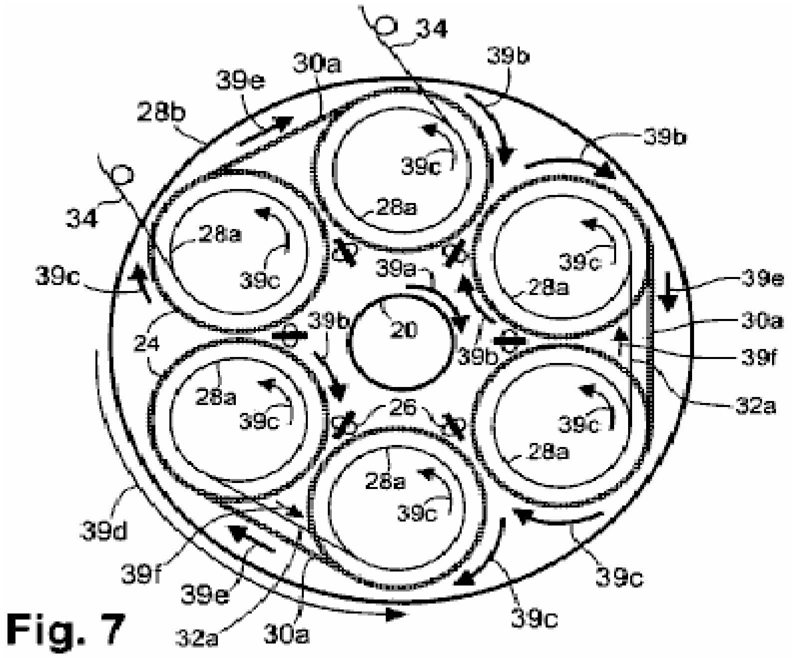

Fig. 7

Fig.7 is a head-end view schematically depicting exemplary current-flow directions in the sending coil, energy-magnifying coils, internal output coils, and external output coils, as well as in the various inter-coil connections of the embodiment of **Fig.4**.

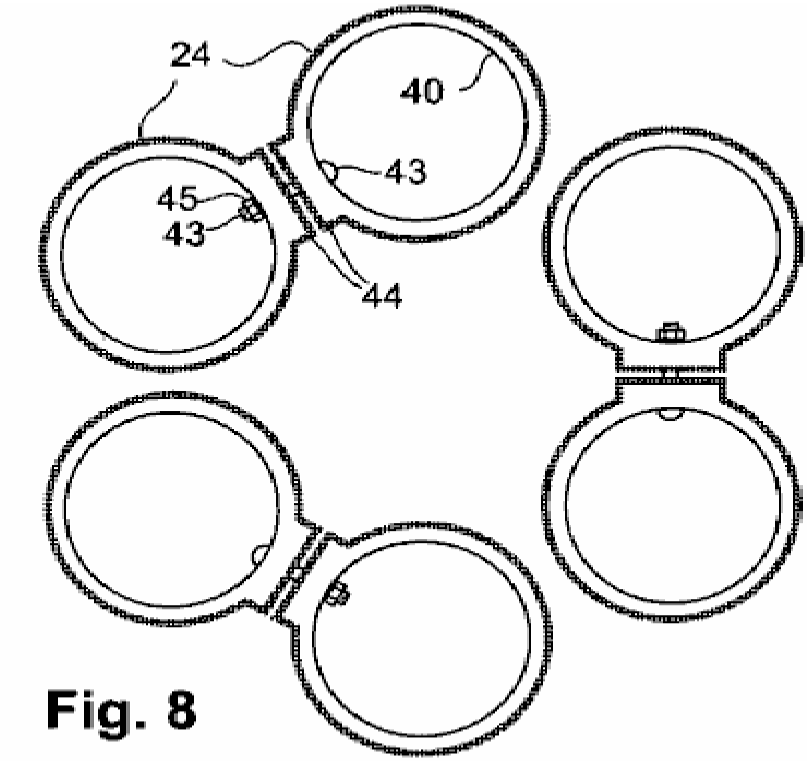

Fig. 8

Fig.8 is a schematic end-view showing an embodiment of the manner in which inter-coil connections can be made between adjacent energy-magnifying coils.

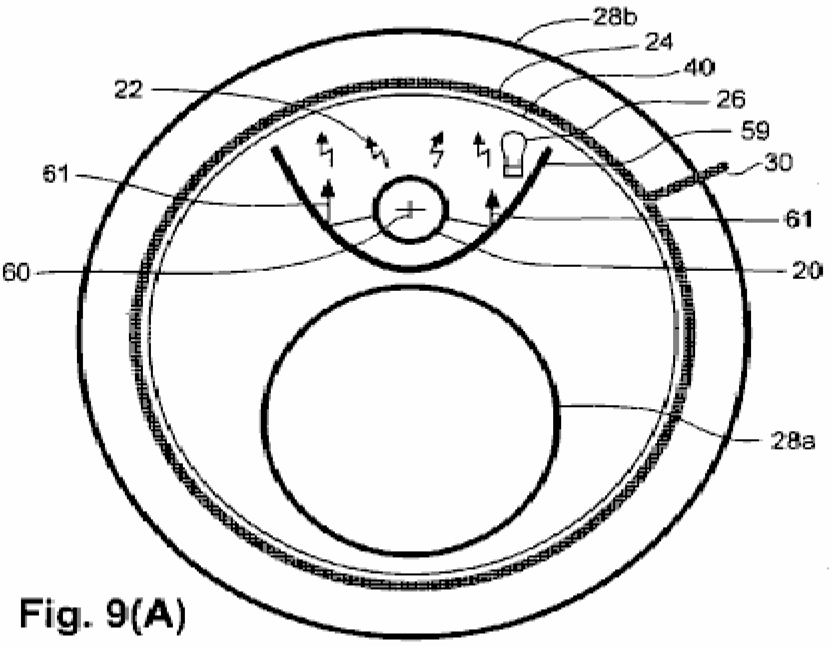

Fig. 9(A)

Fig.9A is a schematic end-view depicting the coil configuration of an embodiment in which a sending coil and an internal output coil are nested inside an energy-magnifying coil, which in turn is nested inside an exterior output coil. A metallic separator, having a substantially parabolic shape, and being situated between the sending coil and the internal output coil, reflects some of the otherwise unused inductive-photon radiation to maximise the effective radiation received by the energy-magnifying coil. Also, the metallic shield prevents the internal output coil from receiving radiation sent from the sending coil.

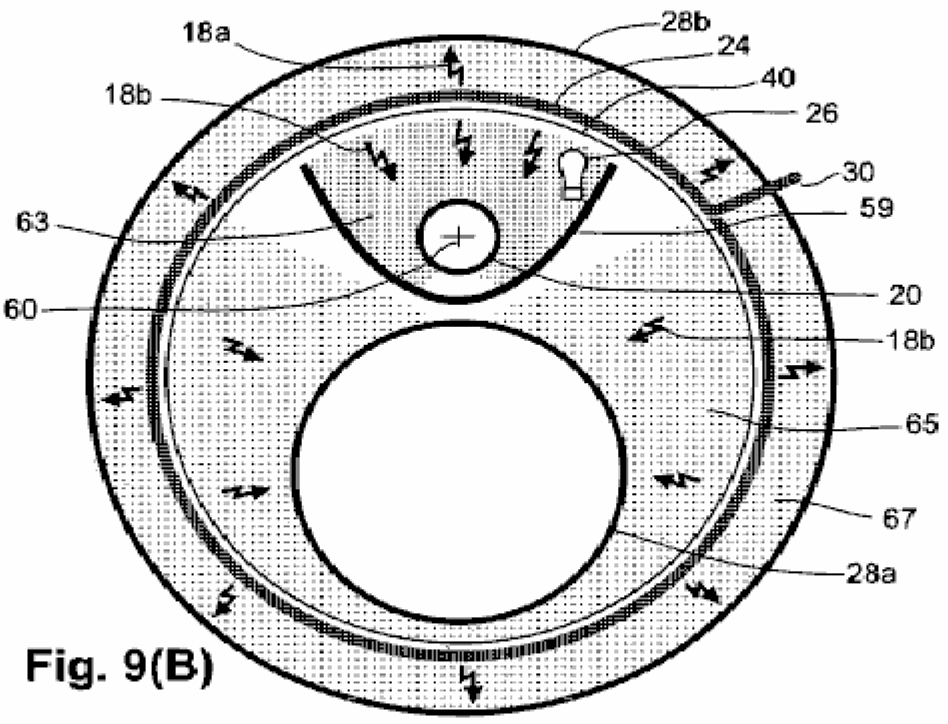

Fig. 9(B)

Fig.9B is a schematic end-view of the coil configuration of **Fig.9A**, further depicting the metallic separator acting as a shield to restrict the back-force radiation reaching the sending coil while allowing the internal output coil to receive a substantial portion of the magnified radiation from the energy-magnifying coil. Also depicted is the greater amount of magnified inductive-photon radiation that is received by the internal output coil and the external output coil in comparison to the lesser amount that is received by the sending coil to act as a back-force.

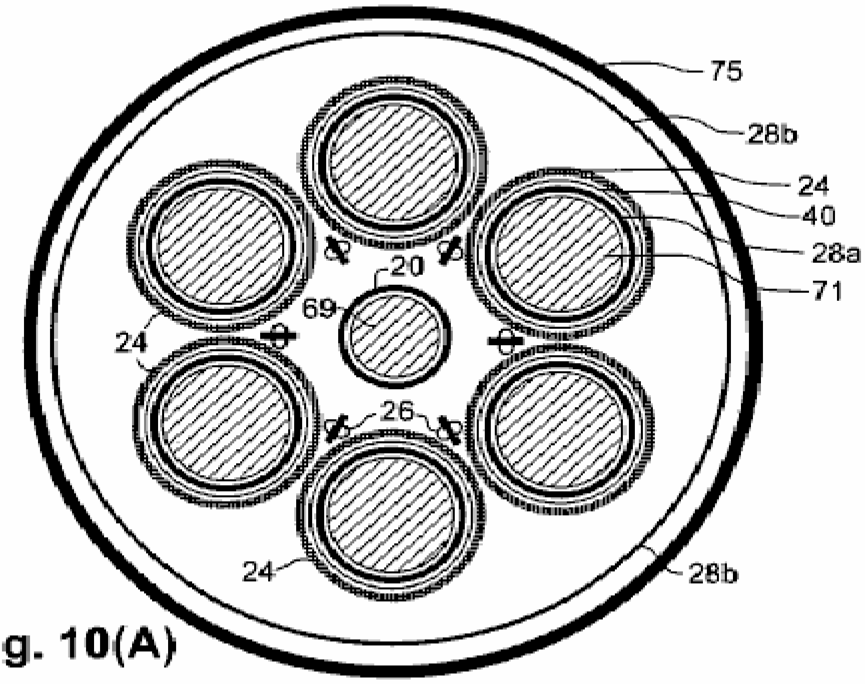

Fig. 10(A)

Fig10A is a schematic end-view depicting the coil configuration of yet another embodiment that is similar in some respects to the embodiment of **Fig.4**, but also including respective ferromagnetic cores inside the sending coil and internal output coils. Also depicted is a metallic shield surrounding the entire apparatus.

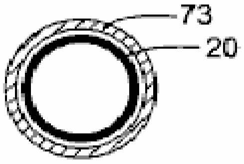

Fig. 10(B)

Fig.10B is a schematic end-view of a sending coil of yet another embodiment in which a ferromagnetic sleeve is disposed coaxially around the sending coil.

DETAILED DESCRIPTION

General Technical Considerations

An understanding of how "infinite energy" mistakenly came to be rejected by the scientific community, clarifies the basis of this invention. The electrodynamic function described in the embodiments described below, conforms to Helmholtz's alternate energy rule, which states that a force which is not in line with it's causative force "may be lost or gained ad infinitum". This rule was included in "Uber die Erhaltung der Kraft" ("On the Conservation of Force") that Hermann Helmholtz delivered to the Physical Society of Berlin in 1847. But, Helmholtz mistakenly believed that "all actions in nature are reducible to forces of attraction and repulsion, the intensity of the forces depending solely upon the distances between the points involved .... so it is impossible to obtain an unlimited amount of force capable of doing work as the result of any combination whatsoever of natural objects".

Helmholtz refused to accept the idea that magnetic energy qualifies for ad infinitum status despite the fact that Ampere's (1820) magnetic force on parallel straight conductors is obviously transverse to the direction of the electric currents rather than being in line with the currents. He omitted mention that the magnetic force in Ampere's (1825) important invention, the solenoidal electromagnet, is caused by currents in the loops of his coils, which are transverse to the direction of magnetic force. Also, he failed to mention that Ampere considered the magnetic force of a permanent magnet to be caused by minute transverse circular currents, which are now recognised as electrons that spin and orbit transversely.

Helmholtz, who was educated as a military medical doctor without any formal study of physics, relied instead on an obsolete metaphysical explanation of magnetic force: "Magnetic attraction may be deduced completely from the assumption of two fluids which attract or repel in the inverse ratio of the square of their distance....It is known that the external effects of a magnet can always be represented by a certain distribution of the magnetic fluids on its surface". Without departing from this belief in magnetic fluids, Helmholtz cited Wilhelm Weber's (1846) similarly wrong interpretation that magnetic and inductive forces are directed in the same line as that between the moving electric charges which cause the forces.

Weber had thought that he could unify Coulombic, magnetic, and inductive forces in a single, simple equation, but Weber's flawed magnetic-force term leads to the absurd conclusion that a steady current in a straight wire induces a steady electric current in a parallel wire. Also, a changing current does not induce an electromotive force in line with the current, as Weber's equation showed. The induced force is offset instead, which becomes more apparent the further that two nested, coaxial coils are separated. What appears to be a directly opposing back-force is actually a reciprocal inductive force.

Helmholtz's assertion that the total sum of the energy in the universe is a fixed amount that is immutable in quantity from eternity to eternity appealed to his young friends. But, the elder scientists of the Physical Society of Berlin declared his paper to be "fantastical speculation" and a "hazardous leap into very speculative metaphysics", so it was rejected for publication in Annalen der Physik. Rather than accept this rejection constructively, Helmholtz found a printer willing to help him self-publish his work. Helmholtz headed the publication with a statement that his paper had been read before the Society, but he disingenuously withheld mention of its outright rejection. Unwary readers have since received the wrong impression that his universal energy-conservation rule had received the Society's endorsement rather than its censure.

Helmholtz (1862, 1863) publicised his concept thus: "We have been led up to a universal natural law, which ... expresses a perfectly general and particularly characteristic property of all natural forces, and which ... is to be placed by the side of the laws of the unalterability of mass and the unalterability of the chemical elements". Helmholtz (1881) declared that any force that did not conserve energy would be "in contradiction to Newton's axiom, which established the equality of action and reaction for all natural forces" (sic). With this deceitful misrepresentation of Newton's strictly mechanical principle, Helmholtz had craftily succeeded in commuting the profound respect for Newton's laws to his unscientific doctrine. Subsequently, the Grand Cross was conferred on Helmholtz by the kings of Sweden and Italy and the President of the French Republic, and he was welcomed by the German Emperor into nobility with the title of "von" added to his name. These prestigious awards made his doctrine virtually unassailable in the scientific community.

Ampere's principle of transverse magnetic attraction and repulsion between electric currents had been made into an equation for the magnetic force between moving electric charges by Carl Fredrick Gauss (written in 1835, published posthumously in 1865). The critical part of the Gauss equation shows, and modern physics texts agree, that magnetic force is transverse to the force that imparts a relative velocity (i.e. perpendicular to a connecting line) between charges. Lacking a direct back-force, a transverse magnetic force can produce a greater force than the force that causes it.

The only physicist to recognise in print, the profound significance of the work of Gauss, was James Clerk Maxwell (1873), who stated "(If Gauss's formula is correct), energy might be generated indefinitely in a finite system by physical means". Prepossessed with Helmholtz's "law", Maxwell chose not to believe Gauss's transverse magnetic-force equation and accepted Wilhelm Weber's (1846) erroneous in-line formula instead. Maxwell even admitted knowing of Gauss's (1845) rebuke of Weber for his mistaken direction of magnetic force as "a complete overthrow of Ampere's fundamental formula and the adoption of essential a different one".

In 1893, the critical part of Ampere's formula for magnetic force, which Weber and Maxwell rejected, and which Helmholtz had replaced with his contrary metaphysical explanation, was proposed for the basis for the international measure of electric current, the Ampere (or amp), to be defined in terms of the transverse magnetic force which the current produces. But Helmholtz's doctrine had become so impervious to facts that anyone who challenged this "law" faced defamation and ridicule.

The first recognition of unlimited energy came from Sir Joseph Larmor who reported in 1897, "A single ion e, describing an elliptic orbit under an attraction to a fixed centre ... must rapidly lose its energy by radiation ... but in the cases of steady motion, it is just this amount that is needed to maintain the permanency of motion in the aether". Apparently to mollify critics of his heretical concept, Larmor offered a half-hearted recantation in 1900: "The energy of orbital groups ... would be through time, sensibly dissipated by radiation, so that such groups could not be permanent".

In 1911, Rutherford found that an atom resembles a small solar system with negative ions moving like planets around a small, positively charged nucleus. These endlessly orbiting electrons were a source of the perpetual radiation that had aptly been described by Larmor, and these orbiting electrons were also Planck's (1911) "harmonic oscillators" which he used to explain Zero-point Energy (ZPE). ZPE was shown by the fact that helium remains liquid under atmospheric pressure at absolute zero, so that helium must be pressurised to become solid at that temperature. Planck believed that harmonic oscillators derived "dark energy" from the aether to sustain their oscillations, thereby admitting that an infinite source of energy exists. However, he assigned an occult origin to this infinite energy, rather than a conventional source that had not met with Helmholtz's approval.

Niels Bohr (1924) was bothered by the notion that radiation from an orbiting electron would quickly drain its energy so that the electron should spiral into the nucleus. Whittaker (1951) states, "Bohr and associates abandoned the principle ... that an atom which is emitting or absorbing radiation must be losing or gaining energy. In its place, they introduced the notion or virtual radiation, which was propagated in ... waves but which does not transmit energy or momentum". Subsequently, the entire scientific community dismissed Larmor radiation as a source of real energy because it failed to conform to Helmholtz's universally accepted doctrine.

Helmholtz's constraining idea that the vast amount of light and heat radiating from the many billions of stars in the universe can only come from previously stored energy, has led scientists to concur that fusion of pre-existing hydrogen to helium, supplies nearly all the energy that causes light and heat to radiate from the sun and other starts. If so, then the entire universe will become completely dark after the present hydrogen supply in stars is consumed in about 20 billion years. William A. Fowler (1965) believed that essentially all the hydrogen in the universe "emerged from the first few minutes of the early high-temperature, high-density stage of the expanding Universe, the so-called 'big bang' ..." Moreover, the background energy of the universe was thought by some to be "relic" radiation from the "Big Bang".

To accept the Big Bang idea that all the stars in the universe originated at the same time, it was necessary to disregard the fact that most stars are much younger or much older than the supposed age of the one-time event, which indicates that their energy must have come from a recurring source. The Big Bang is entirely dependent on the idea that the whole universe is expanding, which stemmed from the interpretation that Hubble's red-shift with distance from the light source, represents a Doppler shift of receding stars and galaxies. This expanding-universe interpretation was shattered by William G. Tifft (1976, 1977), who found that observed red-shifts are not spread randomly and smoothly over a range of values, as would be expected from the Doppler shifts of a vast number of receding stars and galaxies. Instead, the observed red-shifts all fall on evenly spaced, quantised values.

Moreover, Shpenkov and Kreidik (2002) determined that the radiation temperature corresponding to the fundamental period of the orbital electron motion in the hydrogen atom of 2.7289^0K matches the measured temperature of cosmic background radiation of 2.725^0K plus or minus 0.002^0K. This represents perpetual zero-level Larmor radiation from interstellar hydrogen atoms dispersed in the universe. So, Helmholtz's idea that "the energy in the universe is a fixed amount immutable in quantity from eternity to eternity" does not stand up to known facts.

The large aggregate quantity of heat-photons which is generated continually by Larmor radiation can account for the illumination of stars and for the enormous heat and pressure in active galactic centres. Based on the fact that photons exhibit momentum, photons must posses mass, because, as Newton explained, momentum is mass times velocity, which in this case is "c". Consequently, the creation of photons by induction or by Larmor radiation, also creates new mass. The conditions that Fowler was seeking for hydrogen nucleosynthesis, are apparently being supplied indefinitely in active galaxies and possibly in the sun and other stars above a certain size. This invention utilises a similar unlimited energy source.

Another principle that is important to this specification, is that the transfer of energy by electrical induction was found by the Applicant to work in the same manner as the transfer of energy by broadcast and reception of oscillating radio signals. A transverse force is communicated in both cases, the force declines similarly with distance, and the effects of shielding and reflection are identical. Since radio signals are communicated by photons, Applicant considers that inductive force is also communicated by photons. The radiation of newly formed inductive photons results when an accelerated charge experiences a change in direction of acceleration. Inductive radiation occurs when the acceleration of electric charges is reversed, as in Rontgen's bremsstrahlung, in Hertz's linear oscillator (plus all other radio-broadcasting antennas), and in coils which carry an alternating current.

In a similar case, when electric charges move in a curving motion due to a continually changing centripetal acceleration, inductive photons are radiated steadily. This includes the radiation from electrons orbiting atomic nuclei (Larmor radiation) and from conduction electrons flowing in a wire coil, whether the current is steady or not. Circularly produced inductive photons induce a circular motion (diamagnetism) in mobile electrons located near the axis of the electron's circular movement.

In both the reverse-acceleration and centripetal-acceleration cases, inductive photons convey a force to mobile electrons that is transverse to the photon's propagation path. As Lapp and Andrews (1954) reported, "Low-energy photons produce photoelectrons at right angles to their path ...". This same right-angle force without a direct back-force, applies as well, to all conduction electrons which are accelerated by low-energy photons. Hence, inductive energy qualifies for exemption from the energy-conservation law by Helmholtz's same ad infinitum principle which exempts magnetic energy.

The transverse force that inductively produced photons delivered to mobile electrons, is opposite in direction to the simultaneous movement of the primary charge which produces the radiation. This is shown by Faraday's induced current opposite to the inducing current and by the diamagnetically-induced circular motion which, in a rotational sense, is opposite to the circular electron motion in the coil producing it. An oscillating flow of electrons within a loop of a wire coil, induces a force on the conduction electrons which is in the opposite direction in adjacent loops of the same wire. This results in self-induction.

Important to this specification is the realisation that the energy transmitted by photons is kinetic rather than electromagnetic. Inductively radiated photons of low energy, light rays and X-rays cannot be deflected by and electric or magnetic field due to the photons' neutral charge. Neither do neutral photons carry an electric or magnetic field with them. Photon radiation is produced by a change in the acceleration of an electric charge, so only in special cases does it have an electrokinetic origin which involves a magnetic force. To honour these facts, Applicant uses the term "electrokinetic spectrum" in place of "electromagnetic spectrum".

Another principle which is important to this specification is the realisation that, although the charge on the electron has a constant value under all conditions, the mass of an electron is not a fixed, unchanging amount. All free electrons, as in cathode rays, have exactly the same amount of mass at sub-relativistic velocities. This is called "normal" mass and is denoted by m_e. Free electrons have a unique charge to mass ratio that makes the magnetic force resulting from a sub-relativistic velocity imparted to such an electron, exactly equal to the energy input with "normal" electrons.

Also, when a normal electron is given a sub-relativistic acceleration, the inductive force it produces is equal to the force it receives. The mass of highly conductive electrons of metals is apparently very close to normal, but any very slight inductive-energy gains would be masked by inefficiencies. The ubiquity of free electrons and the conduction electrons of metals has led to the view that electron mass is a never-varying figure that would allow the energy conservation law to apply to magnetic energy and inductive energy.

Accurate determinations of electron mass in solid materials have been made possible by cyclotron resonance, which is also called diamagnetic resonance. The diamagnetic force produced by the steady flow of electrons in a wire coil, induces the mobile electrons of a semiconductor to move in a circular orbit of indefinite radius but at a definite angular frequency. This frequency is only related to the inductive force and the mass of the electron. At the same time, a repulsive magnetic force is developed by the relative velocity between the electron flow in the coil and the conduction electrons, causing the mobile electrons of the semiconductor to move in a helical path away from the coil rather than in planar circles. Only two measurements are needed to determine the mass of such an electron: the cyclotron frequency which resonates with the frequency of the electron's circular motion, and the strength of the inductive force, which is determined by the current and dimensions of the coil. Since the co-produced magnetic field is related to the same parameters, its measurement serves as a surrogate for inductive force.

Because the measured mass of conduction electrons in semiconductors is less than normal, a complicated explanation has been adopted to defend the constancy of electron mass in order to support Helmholtz's energy doctrine. An extra force is supposedly received from the vibrational lattice-wave energy of the crystal (in what would have to be an act of self-refrigeration) to make normal-mass electrons move faster than expected around a circular path, thereby giving the appearance that the electron has less mass than normal. In this explanation, the electron is considered to be a smeared-out wave rather than a particle, which is contradicted by the billiard-ball-like recoil of an electron when it is bumped by a quantum of radiation, as described by Arthur Crompton and Samuel Allison (1935).

The fallacy that borrowed energy can provide a boost in velocity to an electron, is more apparent in the case of linear motion. The effective-mass theory considers that the greater linear velocity is caused by a boost given to normal-mass electrons by a “longitudinal wave” imparted by an externally applied force in the same direction as the electron motion. Since this longitudinal wave is also considered to have a source in crystal-lattice vibrations, the effective-mass theory relies on a reversal of entropy in violation of the second Law of Thermodynamics.

No reasonable contribution of direct directional energy can be invoked from any source to impart abnormally great velocity to the conduction electrons in semiconductors. So, the operation of apparatus embodiments described herein, relies on electrons having particle properties and on electrons having less-then-normal inertial mass without invoking any special forces. This is supported by Brennan’s (1999) statement that “the complicated problem of an electron moving within a crystal under the interaction of a periodic but complicated potential, can be reduced to that of a simple free particle, but with a modified mass”. The term “effective” is herein considered redundant in referring to truly inertial mass, but “effective mass” still has relevance in referring to the net movement of orbital vacancies or “holes” in the opposite direction of low-mass electrons.

By $F = ma$, a low-mass electron receives greater acceleration and greater velocity from a given force than an electron of normal mass. The velocity and kinetic energy imparted to an electrically charged body by a force, are determined by the electric charge without regard to the body’s mass. Having a smaller amount of mass, allows a body to attain a greater velocity with any given force. Hence, the magnetic force produced by the charge at this higher velocity will be greater than it would normally be for that same amount of force. This allows low-mass electrons to produce a magnetic force that is greater than the applied force.

Also, the amount of inductive radiation energy from accelerated electrons is related to an electron’s charge without regard to its mass. The energy of inductive radiation increases with the square of the electron’s acceleration according to Larmor’s (1900) equation, while the acceleration is inversely proportional to the lesser electron mass relative to normal electron mass. Therefore, the greater-than-normal acceleration of low-mass electrons, allows the re-radiation of magnified inductive-photon energy at a magnification factor which is proportional to the inverse square of the electron’s mass, e.g., the inductive-energy magnification factor of cadmium selenide photoelectrons with 0.13 of the normal electron mass is $(0.13)^2$ which is 59 times.

Electrons appear to acquire or shed mass from photons in order to fit the constraints of particular orbits around nuclei, because each orbit dictates a very specific electron mass. In metals, where the conduction electrons seem to move as would a gas, one might think that they would assume the normal mass of free electrons. But the largest mean free path of electrons in the most conductive metals is reportedly about 100 atomic spacings between collisions (Pops, 1997), so the conduction electrons apparently fall back into orbit from time to time and thereby regain their metal-specific mass values.

As conduction electrons pass from one metal type to another, they either lose or gain heat-photons to adjust their mass to different orbital constraints. In a circuit comprising two different metallic conductors placed in series contact with each other, the flow of conduction electrons in one direction will cause the emission of heat-photons at the junction, while an electron flow in the reverse direction causes cooling as the result of ambient heat-photons being absorbed by the conduction electrons at the junction (Peltier cooling effect). When a metal is joined with a semiconductor whose conductive electrons have much lower mass than in metals, much greater heating or cooling occurs at their junction.

John Bardeen (1941) reported that the (effective) mass of superconducting electrons in low-temperature superconductors is only 10^{-4} as great as the mass of normal electrons. This is demonstrated when superconducting electrons are accelerated to a much higher circular velocity than normal in diamagnetically induced eddy currents, which results in enormous magnetic forces which are capable of levitating heavy magnetic objects. Electrons with 10^{-4} times normal mass are apparently devoid, (or nearly devoid) of included photon mass, so normal electrons are deduced to posses about 10^{4} times more included photon mass than the bare electron’s own mass.

The means by which photon mass may be incorporated within, or ejected from electrons, can be deduced from known information. Based on the Thompson scattering cross-section, the classical radius of a normal electron is 2×10^{-15} cm. If the electron has uniform charge throughout a sphere of that radius, the peripheral velocity would greatly exceed the velocity of light in order to provide the observed magnetic moment. Dehmelt (1989) determined that the radius of the spinning charge which creates an electron’s magnetism, is approximately 10^{-20} cm. This apparent incongruity can be explained if the electron is considered to be a hollow shell (which is commensurate with the bare electron’s tiny mass in comparison to the very large radius) and if the negative charge of the shell is not the source of the magnetic moment.

It has long been known that a photon can be split into an negative ion (electron) and a positive ion (positron), each having the same amount of charge but of opposite sign. Electrons and positrons can recombine into electrically neutral photons, so it is apparent that photons are composed of a positive and a negative ion. Two ions spinning around each other could produce the photon's wave nature. The only size of photon ion that can exist as a separate entity has a charge of exactly plus one or minus one, whereas the ions can have a very much larger or very much smaller charge and mass when combined in photons, as long as the two ions are equal in charge and mass. Combined in a photon, the two ions are apparently attracted together so strongly that their individual volumes are very much smaller than as separate entities.

When a dipole photon enters an electron shell, its negative-ion portion is expected to be forced towards the shell's centre by Coulombic repulsion, while the photon's positive ion would be attracted by the negative charge of the shell equally in all directions. The negative photon ions would likely merge into a single body at the electron's centre, while the positive-ion portion would orbit around the centralised negative ion to retain the photon's angular momentum. The high peripheral velocity of this orbiting photon mass would enable portions of photon material to spin off and exit the electron shell at the same velocity at which they entered the electron, i.e., the speed of light. The orbiting of the positive photon charge at Dehmelt's small radius, most likely accounts for the magnetic moment that is observed in electrons of normal mass.

Liberated low-mass conduction electrons within intrinsic semiconductors (which are also photoconductors by their nature) and within doped semiconductors, are mostly protected against acquiring mass from ambient-heat photons by the heat-insulative properties of the semiconductors. In contrast, low-mass electrons injected into heat-conducting metals, rapidly acquire mass from ambient-heat photons by the existence of cryogenic conditions, but they are vulnerable to internal heat-photons created by excessive induction.

Conduction electrons of metals, typically move as a group at drift velocities of less than one millimetre per second, although the velocity of the electrical effects approaches the velocity of light. (Photons are probably involved in the movement of electrical energy in metallic conductors.) In contrast, conductive low-mass electrons can move individually at great velocities in superconductors and semiconductors. Brennan (1999, p. 631) reports the drift velocity of a particular electron moving in a semiconductor, to be one micrometer in about 10 picoseconds, which is equivalent to 100 kilometers per second.

The concentration of the conduction electrons in metals is the same as the number of atoms, whereas in semiconductors, the mobile low-mass electrons which are free to move, can vary greatly with the amount of certain photon radiation received. Since the magnitude of an electric current is a summation of the number of electrons involved, times their respective drift velocities, the current developed by a small ensemble of photoconducting electrons moving at high speed, can exceed the current of a much greater number of conduction electrons moving at a very low speed in a metal.

A general feature of intrinsic semiconductors is that they become photoconductive in proportion to the amount of bombardment by some particular electron-liberating frequency (or band of frequencies) of photon energy, up to some limit. The amount of bombardment by the particular wavelength (or, equivalently, the frequency), increases along with all other photon wavelengths as the ambient temperature rises, that is, as the area under Planck's black-body radiation curve increases. Consequently, the conductivity of semiconductors continues to increase with temperature, while the conductivity drops to almost zero at low temperature unless superconductivity occurs.

A single high-energy alpha particle can liberate a great number of low-mass electrons in a thin-film semiconductor, as Leimer's (1915) energy-magnifying experiment appears to show. Leimer's alpha radiation was situated near the distant end of a suspended antenna wire of unreported length, when he experienced the maximum magnetic energy increase in the coil of the ammeter in the receiver. The low-mass electrons had to have travelled the entire length of the suspended antenna and the connecting line to his receiving apparatus without encountering any trapping holes. Assuming these electrons traversed a distance of 1 to 10 metres in less than one half-cycle of the radio frequency, (that is, less than 4 microseconds at 128 kHz) at which time the direction of the low-mass electron would have been reversed, this would be equivalent to velocities of 25 to 250 km/sec.

A great number of superconducting electrons can be set in motion by inductive photon radiation. In contrast, inductive photon radiation can pass mostly through photoconductors that have low concentrations of mobile, low-mass electrons. Applicant's interpretation of Leimer's experiment is that the liberated low-mass electrons of the semiconductor coating of the antenna wire, were not directly accelerated by the inductive photons of the radio signal, but rather were accelerated to high velocities by an oscillating electric field created in the metallic wire by the radio photons.

A review of an experiment performed by File and Mills (1963), shows that the very low mass of superconducting electrons is responsible for causing supercurrents to differ from normal electric currents. A superconducting solenoidal coil (comprising a Nb-25% Zr alloy wire below 4.3^0 K.) with the terminals spot-welded together to make a continuous conductor, was employed. Extremely slow declines of induced supercurrents were observed, which can be attributed to an enormous increase in the coil's self-induction. Because a supercurrent approaches its maximum charge asymptotically when discharging, a convenient measure of the coil's charging or discharging rate is the "time-constant". The time-constant has the same value for both charging and discharging, and it is defined as (a) the time needed for charging the coil to 63% of the maximum amount of current inducible in the coil by a given diamagnetic force, or (b) the time needed to discharge 63% of the coil's induced current.

In normal conductors, the inductive time-constant is calculated by the inductance of the coil, divided by the resistance of the coil. By use of an empirical equation, the inductance of the coil in its non-superconducting state is calculated to be 0,34 Henry, based on a double-layered solenoid of 384 turns that measured 4 inches (10 cm) diameter and 10 inches (25 cm) long. The resistance of the 0.020 inch (0.51 mm) diameter wire at a temperature of 5^0 K. (just above T_C) is estimated by using data for Zr alone, to be 4 x 10^2 ohms. (Resistivity data were not available for Nb or the subject alloy). Under non-superconducting conditions, the time-constant for charging and discharging this coil is thereby calculated to be approximately 8 x 10^{-5} sec.

The time it took to charge up a supercurrent in the coil in the experiment was not reported. But, based on the reported 50 re-energisings and magnetic determinations performed in 200 hours, the measured charging time in the superconducting state is computed to be no more than 4 hours on average.

Using Bardeen's (1941) formula of m is approximately equal to m_e times 10^{-4} for the order of magnitude of the low T_C superconducting electron's mass, and using Larmor's equation (1900) which relates inductive radiation power to the square of the acceleration of the charge, the inductance of the coil is expected to increase by $(10^4)^2 = 10^8$ times in the superconducting state. Thus, the calculated increase in the time-constant of charging up the supercurrent is 8 x 10^{-5} x 10^8 which equals 8 x 10^3 seconds, or 2.2 hours, which is the same order of magnitude as the maximum actual charging time. The self-induction increased by that amount because the low-mass electrons are accelerated 10^4 times faster.

In the case of discharging, the time constant of the supercurrent was projected by File and Mills from measured declines observed over periods of 21 and 37 days. The projections of the two 63% declines agreed closely at 4 x 10^{12} seconds (= 1.3 x 10^5 years). Therefore, the time-constant of supercurrent discharge, based on projecting actual measurements, had increased by 5 x 10^{16} times over the time-constant for electrons of normal mass.

The driving force during charging, had been the applied inductive force, whereas the driving force during discharging was the supercurrent that had been magnified 10^8 times. Therefore, during the discharging of the supercurrent, the time-constant is increased again by 10^8 times, so the calculated total increase in the time-constant of discharge is 10^8 x 10^8 = 10^{16} times greater than the normal time-constant. This calculated value of the non-superconducting time-constant, based solely on the increase of inductive radiation due to extremely low electron mass, compares favourably in magnitude with the actually observed value of 5 x 10^{16} times the normal time-constant.

The superconducting coil required no more than four hours to charge up the supercurrent, yet during subsequent discharge, the superconducting coil was projected to radiate inductive photon energy from the centripetal acceleration of the superconducting electrons for 130,000 years before declining by 63%. If this experiment could take place where no energy would needed to sustain critical cryogenic conditions, as in outer space, the lengthy discharge of this energised coil would clearly demonstrate the creation of energy in the form of newly-created photons inductively radiating from the superconducting low-mass electrons that circulate around the coil's loops. Applicant interprets this as showing that low-mass electrons are capable of inductive-energy-magnification based solely on their mass relative to that of normal electrons.

In the embodiments described below, the magnified inductive energy of low-mass electrons is utilised in coils for electric-energy generation by employing a flow of inductively accelerated photons that alternates in direction. This, in turn, drives low-mass electrons in an oscillating manner, so this forced reversal involves only a single stage of inductive-energy magnification, rather than the two stages (charging and naturally discharging) in the foregoing experiment.

Mode of Operation

Inductive photons radiating from an oscillating electric current in a sending conductor (e.g. from a radio-wave broadcasting antenna) convey a force, on conduction electrons in a receiving conductor, that is transverse to the incidence direction of the incident inductive photons on the receiving conductor. As a result, no back-force is transferred directly back to the sending conductor. Applicant has discovered that the action of this transverse force on low-mass electrons in a receiving conductor is analogous to the action of Gauss's transverse magnetic force on free electrons in a conductor, which is not subject to the kinetics law of conservation of energy. If the receiving conductor has low-mass conduction electrons, then this transverse force would impart greater acceleration to the low-mass electrons than that it would impart to normal free electrons. The resulting greater drift velocities of low-mass electrons than normal free electrons in the receiving conductor, would yield an increased magnitude of inductive force produced by the low-mass electrons in the receiving conductor and hence produce a magnification of the irradiation energy of inductive photons.

The direction of the transverse force imparted by the radiated inductive photons on conduction electrons in the receiving conductor is opposite to the direction of the corresponding electron flow in the sending conductor. This relationship is similar to the inductive force on electrons in the secondary coil of a transformer, which also is opposite to the direction of flow of electrons in the primary coil.

Various embodiments of Applicant's electrical generator employ inductive photons radiated from electrical oscillations in a "sending coil". Inductive photons are radiated from the sending coil toward and inductive-photon receiving coil, termed an "energy-magnifying coil", which comprises a photoconductive or superconductive material, or other suitable material as described below. The energy-magnifying coil is placed in a condition favourable for the production of low-mass electrons that participate in electrical conduction in the energy-magnifying coil. For example, if the energy-magnifying coil is made of photoconductive material, the coil is provided with a photoconduction exciter. Alternatively, if the energy-magnifying coil is made of a superconductive material, the coil is placed in an environment at a temperature (T) no greater than the critical temperature (T_c); i.e., $T < T_c$. In the former example, the photoconduction exciter can be a source of illumination which provides an appropriate wavelength of excitive electrokinetic radiation. If the energy-magnifying coil is comprised of a doped semiconductor, the condition that provides mobile low-mass electrons already exists.

In the energy-magnifying coil, the greater-than-normal acceleration of the low-mass electrons produces greater-than-normal inductive forces in the form of greater-than-normal radiation of inductive photons from the coil. The resulting increased inductive-photon energy from the photoconductor or superconductor is converted into useful electrical energy in an output coil inductively coupled to the energy-magnifying coil. The output coil can be made of insulated metallic wire. An exemplary output coil is situated coaxially with, and nested within, the energy-magnification coil. A coil of this type is termed herein, an "internal output coil".

The ability of the subject apparatus to produce more energy output than energy input, is based on the output coil receiving more of the magnified energy from the energy-magnifying coil than is returned as a back-force from the output coil to the energy-magnifying coil. This principle is termed herein "energy leverage".

The oscillations in the energy-magnifying coil are initiated by an external energy-input source that provides an initiating impulse of electron flow in the sending coil. For example, the external energy-input source can be an adjacent independent electromagnet or an adjacent permanent magnet moved rapidly relative to the sending coil. The initiating impulse starts an oscillation in the sending coil that stimulates radiation of inductive photons from the sending coil to the energy-magnifying coil. Energy from the external energy-input source is magnified by the apparatus so long as the energy-magnifying coil does not act as an independent oscillator at a different frequency. Independent oscillation is desirably avoided by connecting the ends or terminals of the energy-magnifying coil to each other in such a way that it results in one continuous coil, or a continuous multiple-coil system or systems, connected together in such a way that continuity exists for the conduction of low-mass electrons throughout the entire coil system. The energy-magnifying coil inductively creates more energy in the output coil than the energy of the initial impulse. The resulting magnified output of electrical energy produced by the apparatus is available for useful purposes in a work loop.

After initiation, the apparatus is made self-sustaining using a feed-back loop arranged in parallel with the work loop that includes the sending coil, and with a capacitor located in the feed-back loop to make it an L-C circuit, i.e., after start-up of the apparatus using the external energy-input source, the apparatus becomes self-resonating, which allows the external energy-input source to be decoupled from the apparatus without causing the apparatus to cease production of electrical energy.

During normal self-sustained operation, a portion of the output electrical energy is returned to the sending coil by the feed-back loop, thereby overcoming the need to use the external energy-input source for sustaining the oscillations in the sending coil. In other words, after startup, the external energy which was used by the sending coil to excite the photoconductive material or the superconducting material in the energy-magnifying coil is replaced by a portion of the output energy produced by the apparatus itself. The remainder of the output electrical energy is available in the work loop for useful purposes.

Initiating the generation of electrical energy by the apparatus, takes advantage of the fact that the inductive back-force sent from the output coil to the energy-magnifying coil (and hence ultimately, back to the sending coil), arrives at the sending coil one cycle behind the corresponding pulse that initiated the flow of electrons. This one-cycle lag of the back-force, as well as a corresponding one-cycle lag in the feed-back, enables small starting pulses produced in the sending coil to produce progressively greater electrical outputs each successive cycle. Consequently, assuming that the electrical load is not excessive during start-up, only a relatively few initiating cycles from the external energy-input source typically are needed for achieving production by the apparatus of an amount of output power sufficient to drive the load as well as providing sufficient energy feed-back to the sending coil in a sustained manner.

A half-cycle of the one-cycle lag occurs between an initial acceleration of electrons in the sending coil and a corresponding initial oscillation in the energy-magnifying coil. This half-cycle lag occurs because induction photons are not radiated from the initial acceleration of electrons in the sending coil, but rather are radiated when the electrons are reverse-accelerated. (Kramers, 1923, and Compton and Allison, 1935, p.106). As the newly formed photons are being radiated by the respective deceleration of electrons in the sending coil, even more new photons are simultaneously being formed by the new direction (i.e. reverse direction) of acceleration under oscillating conditions. Thus, the radiation of photons from electrons alternatingly accelerated in the opposite direction from the conveyed force, continues each half-cycle after the initial half-cycle.

Applicant also discovered that a half-cycle lag also occurs between the initial flow of electrons in the primary coil of a certain type of transformer, which is simply comprised of coils nested coaxially rather than being inductively coupled by an iron core, and the resulting electron flow induced in the secondary coil. When applied to this apparatus, these finding indicate that a second half-cycle lag occurs between the acceleration of low-mass electrons in the energy-magnifying coil and the corresponding electron flow induced in the output coil. The feed-back from the output coil boosts the electron flow in the sending coil one whole cycle after the initial pulse.

As discussed above, the energy-magnifying coil comprises either a photoconductor, a doped semiconductor or a superconductor as a source of, and as a conductor of, low-mass electrons. The general configuration of the coil is similar in either case. The coil including a photoconductor or doped semiconductor, has an operational advantage at normal temperatures, and the coil including a superconductor has an operational advantage at sub-critical temperatures ($T < T_c$), such as in outer space.

Representative Embodiments

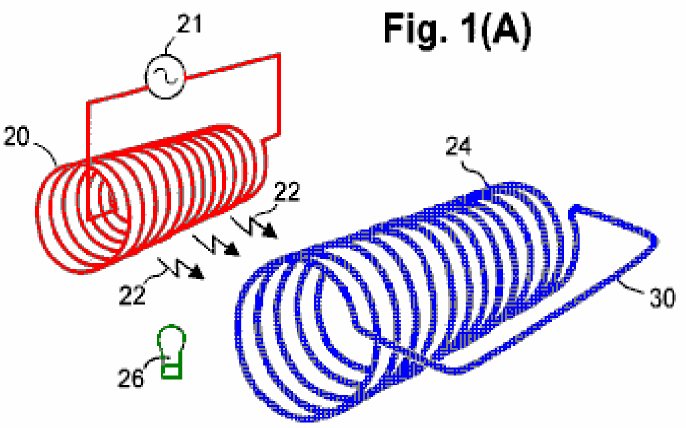

Fig. 1(A)

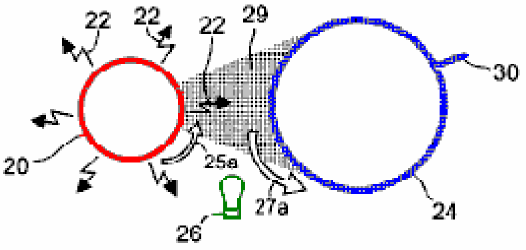

Fig. 1(B)

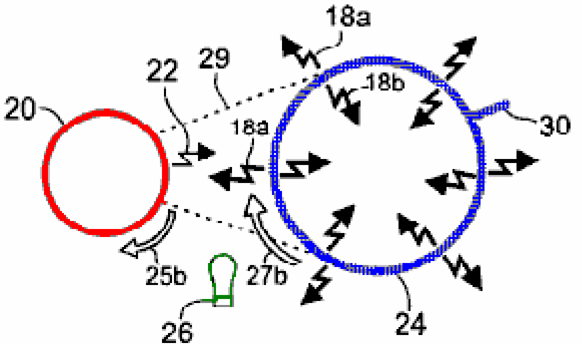

Fig. 1(C)

Reference is now made to **Fig.1A** to **Fig.1C** and **Fig.2A** and **Fig.2B** which depict a sending coil **20** connected to a source of alternating current **21**. The sending coil is shown having a desirable cylindrical profile, desirably with a circular cross-section as the most efficient configuration. In **Fig.1A** and **Fig.1B**, electrical oscillations from the source **21** are conducted to the sending coil **20** where they cause inductive photons **22** to radiate from the sending coil. The radiated photons **22** convey transverse forces in the same manner that a radio-broadcasting antenna transmits oscillating energy. The sending coil **20** can be a single layer or multiple layers of insulated metal wire (e.g. insulated copper wire). One layer is sufficient, but an additional layer or layers may increase operational efficiency. If necessary, or desired, the turns of wire can be formed on a cylindrical substrate made of a suitable dielectric.

The inductive photons **22** radiating from the sending coil **20**, propagate to an energy-magnifying coil **24** that desirably has a cylindrical profile extending parallel to the sending coil. In the embodiment shown in **Fig.1A** and **Fig.1B**, the energy-magnifying coil **24** does not terminate at the ends, but rather, it is constructed with a connector **30** to form a continuous conductor. The energy-magnifying coil **24** desirably is a helical coil made of a material comprising a photoconductive or superconductive material, or other suitable material. If necessary or desired, the energy-magnifying coil can be formed on a substrate which, if used, desirably is transmissive to the inductive-photon radiation produced by the coil.

In an energy-magnifying coil **24** made of a superconducting material, a large population of conductive low-mass electrons is produced in the coil by lowering the temperature of the coil to a point below the critical temperature for that material. By way of an example, sub-critical temperatures are readily available in outer space or are produced under cryogenic conditions.

In an energy-magnifying coil **24** made of a photoconductor material, a large population of conductive low-mass electrons is produced in the coil by illuminating the coil with photons of an appropriate wavelength, such as photons produced by a photoconduction exciter **26**. The photoconductor exciter **26** desirably is situated and configured so as to illuminate substantially at least the same side of the energy-magnifying coil **24** that receives inductive photons **22** radiating directly from the sending coil **20**. Alternatively, the photoconduction exciter **26** can be situated and configured so as to illuminate all sides of the energy-magnifying coil **24**. In the depicted embodiment, the photoconduction exciter **26** can be at least one incandescent lamp (as shown) energised by conventional circuitry (not shown). Alternatively, the photoconduction exciter **26** can be at least one gas-discharge lamp or one or more Light Emitting Diodes. The wavelength produced by the photoconduction exciter **26** can be, for example, in the infrared (IR), visible, ultraviolet (UV), or X-ray range as required by the particular photoconductor material in the energy-magnifying coil **24**. Another possible form of the photoconduction exciter **26**, is a source of photons in the gigahertz or the terahertz portion of the electrokinetic spectrum. Other photoconduction exciters are configured, as required, to produce a suitable wavelength from the radio-wave portion of the electrokinetic spectrum. The illumination can be either direct from the photoconduction exciter **26** to the energy-magnifying coil **24** or conveyed from a remotely located photoconduction exciter to the energy-magnifying coil via optical fibres, light pipes, or the like.

Fig.1B and **Fig.1C** are respective orthogonal end views of the sending coil **20** and energy-magnifying coil **24** shown in **Fig.1A**. The radiation of inductive photons **22** from the sending coil **20**, is indicated schematically in **Fig.1A**, **Fig.1B** and **Fig.1C** by small, jagged arrows. The forces delivered by the photons **22** to the conductive low-mass electrons in the energy-magnifying coil **24**, alternate in directions which are opposite to the respective directions of simultaneous electron flow in the sending coil **20**. Whenever the particular oscillation phase of electron flow in the sending coil **20** is in the direction of the curved arrow **25a** adjacent to the sending coil **20** in **Fig.1B**, the resulting transverse photon force causes a flow of low-mass electrons in the energy-magnifying coil **24**, depicted by the curved arrow **27a** adjacent to the energy-magnifying coil **24**.

The shaded sector **29**, shown in **Fig.1B**, denotes the proportion of inductive-photon radiation **22** from the sending coil **20**, actually received by the single energy-magnifying coil **24** shown, compared to the entire 360-degree radiation of inductive photons **22** from the sending coil **20**. Aside from a small amount of inductive-photon radiation lost from the ends of the sending coil **20**, the relative amount of the total energy of inductive-photon radiation received by the energy-magnifying coil **24** is determined by the angle subtended by the energy-magnifying coil **24**, relative to the entire 360 degrees of inductive-photon radiation from the sending coil **20**.

In **Fig.1C**, the low-mass conduction electrons of the energy-magnifying coil **24** are accelerated to a higher drift velocity than normal free electrons in the energy-magnifying coil **24** would be. As noted above, the sending coil **20** is energised by alternating electron flow, which causes a periodic reversal of direction of electron flow in the sending coil **20** (compare the direction of the arrow **25b** in **Fig.1C** with the direction of the arrow **25a** in **Fig.1B**). Each reversal of direction of electron flow in the sending coil **20**, causes a corresponding reversal in the direction of acceleration of the low-mass electrons in the energy-magnifying coil **24** (compare the direction of the arrow **27b** in **Fig.1C** with the direction of arrow **27a** in **Fig.1B**). Each such reversal in direction of acceleration causes a corresponding radiation of inductive photons (jagged arrows **18a**, **18b**) radially outwards and radially inwards, respectively, from the energy-magnifying coil **24**. Note that the arrows **18a** and **18b** are larger than the arrows denoting the inductive photons (arrows **22**) from the sending coil **20**. This symbolically denotes energy magnification. Note also that, of the magnified inductive-photon energy radiating from the energy-magnifying coil **24**, substantially half is directed inwards (arrows **18b**), and substantially the other half is radiated outwards (arrows **18a**).

Fig. 2(A)

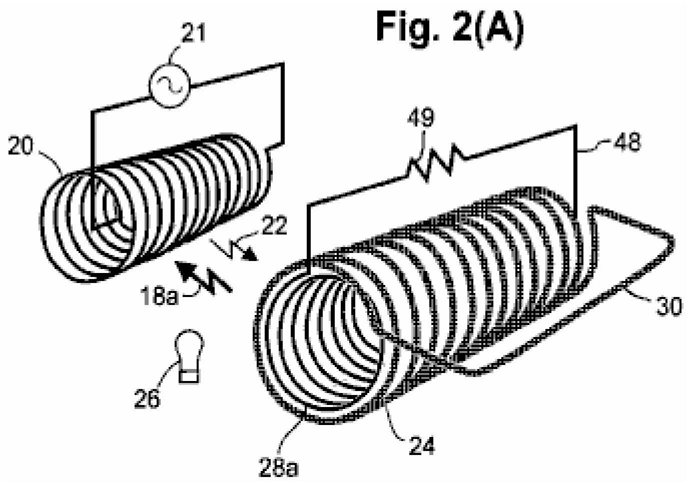

Turning now to **Fig.2A**, the sending coil **20**, and the energy-magnifying coil **24**, are shown. The energy-magnifying coil **24** in **Fig.2A** includes an internal output coil **28a**, that desirably is situated co-axially inside and is of the same length as the energy-magnifying coil **24**. A work loop **48** can be connected to the ends of the internal output coil **28a**, thereby forming an electrical circuit in which a load **49** is indicated symbolically as a resistor. The internal output coil **28a** and the conductors of the work loop **48**, desirably are made of insulated metallic (e.g. copper) wire.

Fig. 2(B)

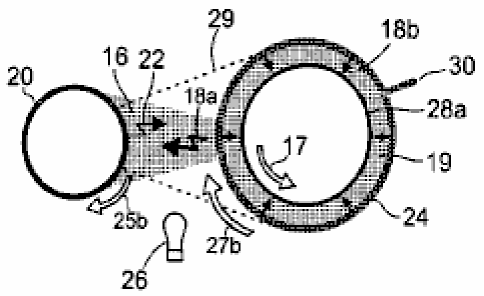

Fig.2B depicts a transverse section of the coils shown in **Fig.2A**. In **Fig.2B**, the magnified inductive-photon energy (shaded area **19**) produced by the energy-magnifying coil **24** and directed radially inwards towards the internal output coil **28a**, induces a corresponding oscillating electron flow in the internal output coil **28a**. Thus, the work loop **48** connected across the internal output coil **28a**, is provided with greater energy than was received by the energy-magnifying coil **24** from the sending coil **20**. The direction of the electron flow (arrow **17**) in the internal output coil **28a**, is opposite to the direction of flow (arrow **27b**) in the energy-magnifying coil **24**, which in turn is opposite to the direction of electron flow **25b** in the sending coil **20**.

In **Fig.2B**, the annular-shaped shaded area 19 between the energy-magnifying coil **24** and the internal output coil **28a**, indicates that substantially all of the internally-directed magnified inductive-photon energy (i.e. approximately half of the total radiation energy) from the energy-magnifying coil **24**, is directed to, and captured by, the internal output coil **28a**. In contrast, the shaded sector **16** extending from the energy-magnifying coil **24** to the sending coil **20**, indicates that a relatively small proportion of the outwardly directed magnified radiation **18a** from the energy-magnifying coil **24** is directed to the sending coil **20** where the radiation provides a corresponding back-force. Aside from the small amount of inductive-photon radiation lost from the ends of the energy-magnifying coil **24**, the relative amount of the magnified inductive-photon radiation (sector **16**) providing the back-force on the sending coil **20**, is a function of the angle subtended by the sector **16**, compared to the 360-degree radiation from the energy-magnifying coil **24**.

The ratio of magnified energy **18b** from the energy-magnifying coil **24** and received by the internal output coil **28a**, to the magnified energy **18a** received as a back-force by the sending coil **20**, denotes the energy “leverage” achieved by the subject apparatus. If this ratio is greater than unity, then the energy output from the internal output coil **28a** exceeds the energy input to the energy-magnifying coil **24**. This energy leverage is key to the self-sustained operation of the apparatus, especially whenever the apparatus is being used to drive a load. In other words, , with a sufficiently large energy-magnification factor achieved by the energy-magnifying coil **24**, the electrical energy available in the work loop **48**, exceeds the input energy that produces the oscillations in the sending coil **20**. The electric power input to the sending coil **20** thereby produces magnified electric power in the internal output coil **28a** that can perform useful work in the work loop **48** while self-powering the continued operation of the apparatus.

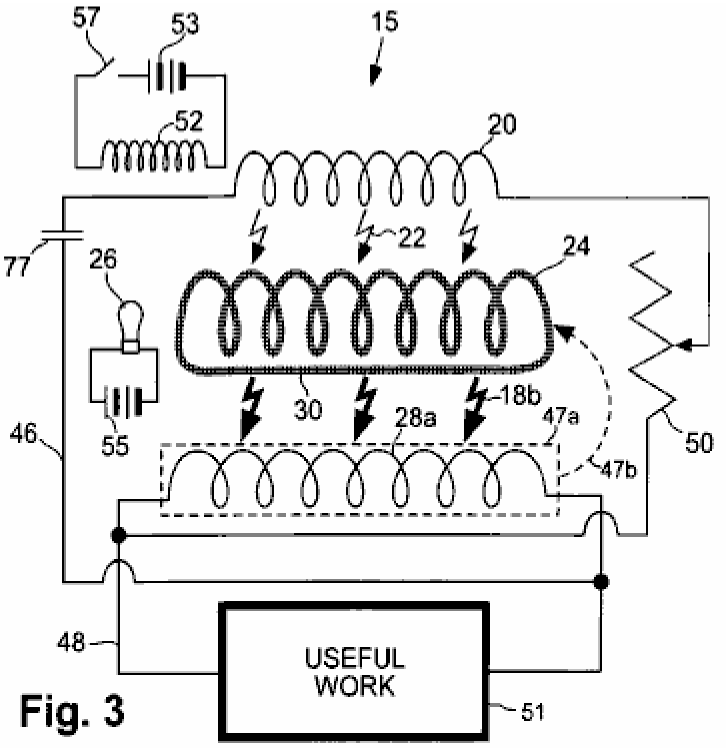

Fig. 3

Reference is now made to **Fig.3**, which schematically depicts aspects of the apparatus **15**, responsible for self-generation of electric power by employing a feed-back loop **46**. The conductors of the feed-back loop **46** can be made of insulated metallic wire. (In **Fig.3**, the dotted lines **47a** and dotted arrow **47b**, indicate that the internal output coil **28a** is actually positioned co-axially inside the energy-magnifying coil **24**, as described above, but is depicted in the figure as being outside the energy-magnifying coil for ease of illustration). The feed-back loop **46**, conducts a portion of the electric power from the internal output coil **28a**, back to the sending coil **20**. The remaining portion of the electric power from the internal output coil **28a** is directed to the work loop **48** where the power is utilised for useful work **51**. The relative proportions of output power delivered to the feed-back loop **46** and to the work loop **48**, can be varied by adjusting a variable resistor **50**.

As noted above, an initial source of electrical energy is used for "starting" the apparatus **15** by initiating an oscillation in the sending coil **20**. After starting, under usual operating conditions, the apparatus **15** is self-resonant and no longer requires the input of energy from the initial source. The particular inductance and distributed capacitance of the sending coil **20**, plus all other capacitances and inductances in the apparatus, provide a certain corresponding frequency of self-resonating oscillation. In the feed-back loop **46** is a capacitor **77** that makes the apparatus an L-C circuit which oscillates at its own frequency. the frequency can be changed by altering the capacitance or inductance of the apparatus, or both. the capacitor **77** can be a variable capacitor by which the frequency can be adjusted.

As shown in **Fig.3**, the initial source of oscillating electrical energy can be an impulse from an external electromagnet **52** powered by its own energy source (e.g. a battery **53** as shown, or other DC or AC source). For example, the electromagnet **52** can be placed near the sending coil **20** or other portion of the feed-back loop **46**, and energised by a momentary discharge delivered from the battery **53** via a switch **57**. The resulting pulse generated in the electromagnet **52**, initiates a corresponding electrical pulse in the sending coil **20** that initiates self-sustaining oscillations in the apparatus **15**. In another embodiment, the electromagnet **52** can be energised briefly by an AC source (not shown). In yet another embodiment, the initial source can be a permanent magnet which is moved rapidly (either mechanically or manually) near the sending coil **20** or other portion of the feed-back circuitry. In any event, the pulse provided by the initial source initiates electrical oscillations in the sending coil **20** that produce corresponding oscillating inductive-photon radiation **22** from the sending coil **20**, as shown schematically in **Fig.3** by thin jagged arrows. The inductive-photon radiation **22** from the sending coil **20** causes, in turn, re-radiation of magnified inductive-photon energy **18b** from low-mass electrons in the energy-magnifying coil **24**, as shown schematically in **Fig.3** by thick jagged arrows. **Fig.3** depicts a photoconductive energy-magnifying coil **24** which is illuminated by an incandescent photoconduction exciter **26** energised by its own power source **55** (e.g., an externally connected battery as shown).

A sufficiently high energy-magnification factor of the apparatus **15** allows the magnified energy from the energy-magnifying coil **24** to induce greater energy in the internal output coil **28a** than the energy of the corresponding initial pulse. A portion of the magnified electrical energy is returned to the sending coil **20** via the feed-back loop **46** to sustain the oscillations.

The remaining surplus energy from the internal output coil **28a** is available for application to useful work via the work loop **48**. In one embodiment, some of this useful work can be used for illuminating the photoconduction exciter **26** (circuitry not shown) in an apparatus configuration in which the energy-magnifying coil **24** comprises a photoconductor. In another embodiment, some of this useful work can be used for maintaining cryogenic ($T < T_c$) conditions for an apparatus configuration in which the energy-magnifying coil **24** comprises a semiconductor.

After starting oscillations in the apparatus **15**, electron flow builds up rapidly, so long as the load **49** does not draw off too much of the output energy during start-up. Upon reaching operating equilibrium, the output of electrical power from the apparatus **15** is a rapidly alternating current (AC). The AC output can be rectified by conventional means to produce direct current (DC), and the output can be regulated as required, using conventional means. Many variations of conventional circuitry are possible, such as, but not limited to, automatic voltage controllers, current controllers, solenoidal switches, transformers, and rectifiers,

Regarding the energy-magnifying coil **24**, an exemplary embodiment can be made from a low - T_c superconductor such as commercially available, flexible, niobium-zirconium wire which can be readily formed into a coil.. Other embodiments, as noted above, of the energy-magnifying coil **24** can be made using a photoconductive material or a high - T_c superconductor. Most high - T_c superconductors (and some photoconductors) have ceramic-like properties and thus require the application of special methods for forming the material into a cylindrical coil having electrical continuity throughout. Some commercially available high - T_c superconductors are available in ribbon or tape form. The energy-magnifying coil **24** can be free-standing or supported on a rigid substrate.

By way of example, an energy-magnifying coil **24** can be made from a ribbon of flexible photoconductive material such as the material discussed in patent US 6,310,281, incorporated herein for reference. Briefly, a layer of stress-compliant metal is placed on a plastic ribbon. Then the photoconductive material is deposited on both sides of the metal-covered ribbon and the edges of the ribbon so that the ribbon is coated all the way around. Such a configuration allows low-mass electrons in the photoconductive material, to receive energy from inductive-photons emitted from the sending coil **20** on one side of the ribbon while re-radiating magnified energy from both sides of the ribbon.

In another example, a flexible photoconductor ribbon is made from flexible organic polymer having photoconductive properties. (High electrical conductivity observed in photoconductive polymers is attributed to the presence of low-mass electrons in the material). The flexible photoconductive ribbon can be wound on a dielectric tubular support, to form the energy-magnifying coil 24.

In yet another example, a thick-film coating of photoconductive cadmium sulphide (CdS) or cadmium selenide (CdSe) is formed on a wire coil by sintering as paste, which comprises a powder of finely ground CdS or CdSe crystals mixed with water and at least a fluidiser such as cadmium chloride, at a temperature of 550^0 C. to 600^0 C. in a controlled atmosphere. During sintering, the boundaries of the small crystals become melted with the heated fluidiser, allowing the crystals to regrow together and solidify when the fluidiser evaporates and the sintered coating is cooled. Alternatively, copper oxides are formed in place on bare copper or bronze wire by heating the wire above about 260^0 C. in an oxygen atmosphere, or by application of chemical oxidants.

In yet another example, a coil of ceramic-like superconductor or photoconductor is made by tape-casting, extruding, slip-casting, cold or hot-pressing, or coating of the material as a thin film arranged helically on a tubular dielectric substrate. The assembly is heat-treated in a controlled atmosphere furnace to increase inter-crystalline contacts. Alternatively, the thin film of superconductor or photoconductor is formed over the entire exterior of the dielectric substrate, followed by removal of selected portions of the superconductor or photoconductor to form the desired helical coil.

[121]In some photoconductors and doped semiconductors, only a small portion of a population of inductive photons irradiated on the material, impact with, and yield acceleration of, low-mass electrons in the material. This is due to a low density of photoconductive low-mass electrons in the material. In such as case, inductive-photon radiation passing through the material can be captured efficiently by normal free conduction electrons in a metallic strip that desirably is in immediate contact with, or embedded in, the material. The acceleration of normal free electrons in the metallic conductor, sets up an electric field that assists in accelerating the low-mass photoelectrons. In this configuration, it is desirable that the photoconductive material be disposed completely over and around the metallic strip so that the photoconductor faces both outwards and inwards, with both sides of the photoconductor or doped semiconductor being in electrical contact with each other.

One factor in the choice of photoconductor material to use in forming the energy-magnifying coil **24** is the potential magnification of energy that can be realised by low-mass electrons of an n-type or p-type photoconductive material. Other important factors are the quantity of low-mass electrons that are available in the photoconductive material for a given amount of illumination and the actual electrical conductance of the material. Standard illumination-sensitivity measurements provide a general overall index of the ability of a photoconductor to serve effectively in magnifying energy.

Cadmium sulphide and cadmium selenide, the most common photoconductive compounds which are available commercially, have calculated magnification factors of 37 and 59, respectively. The peak response wavelength of cadmium sulphide is 515 nanometers (in the green part of the visible spectrum) and of cadmium selenide is 730 nanometers (in the near-infrared part of the spectrum). Cadmium sulphide can be mixed with caesium selenide under certain conditions, so the resulting mixture assumes photoconductive characteristics between those two values. Mixtures can be produced having peak wavelengths which are matched to the wavelengths of commercially available LEDs of many sizes and illumination intensities. Some semiconductors which become photoconductive at a wavelength smaller than the wavelength produced by currently available LEDs can be made conductive of low-mass electrons merely by heating.

Applicant has found that gallium arsenide develops considerably higher conductivity than copper or silver at a temperature of 100^0 C. and that the conductive electrons are low-mass. Also, alpha radiation is capable of liberating many low-mass electrons in some semiconductors. A second electron of comparatively low mass may have been liberated from cupric oxide by alpha radiation along with the outer copper electron in Leimer's (1915) experiments, since the measured energy magnification exceeded the magnification calculated from cyclotron resonance of CuO, which most likely pertains only to the mass of the outer electron.

Dopants can be added to a semiconductor to make it more conductive of low-mass electrons without illumination. Also, the illumination-sensitivity and conductivity of cadmium sulphide are increased by adding small amounts of donor-type dopants such as, but not limited to, sulphides, selenides, tellurides, arsenides, antimonides and phosphides of the Type-IIIa elements: aluminium, gallium, indium and thallium. In this regard, the photoconductors of high-sensitivity photovoltaic cells may comprise as many as five different compounds. The actual mixtures of photoconductive compounds and dopants used in commercially available photovoltaic cells often are trade secrets. But, the sensitivity and conductances of the cells are usually given or are measurable, and these data can be used advantageously in selecting a particular photoconductive compound for use in the apparatus.

Other photoconductive compounds or elements can be employed in energy-magnifying coils. For example, the conduction electrons of silicon have an energy-magnification factor of 15 times. Photoconductors having very high magnification factors include, but are not limited to, gallium arsenide, indium phosphide, gallium antimonide, cadmium-tin arsenide, and cadmium arsenide, which have calculated energy-magnification factors ranging between 200 times and 500 times, and mercury selenide (1100 times), indium arsenide (2000 times), mercury telluride (3400 times) and indium antimonide (5100 times).

The depth of optical transmission largely determines the optimum thickness of photoconductive films for energy-magnifying coils. For example, the highest optical transmission of sintered CdS is reported to be 20 micrometers, but since the average grain size increases (and the average porosity decreases) with an increase in film thickness, the maximum conductivity of a sintered film is at a thickness of 35 micrometers (J. S, Lee et al., 1987).

The metal chosen to be embedded must not react chemically with the photoconductor. For example, aluminium reacts with gallium arsenide (GaAs) in an electrical environment, to change the conductive character of both the GaAs and the aluminium. Gold, platinum, and palladium can serve in many cases because these materials are relatively inert chemically. Gold combines chemically with tellurium, however, so gold is not suitable for embedding in mercury telluride. Cadmium plating over a common metal serves to alleviate the reactivity in cases where cadmium sulphide or cadmium selenide is used as the photoconductor.

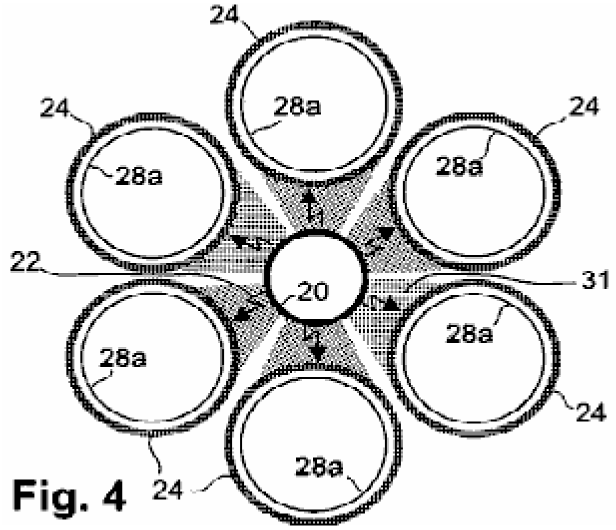

Fig. 4

The discussion above has been, for ease of explanation, in the context of the apparatus including one energy-magnifying coil **24**. However, as discussed, use of a single energy-magnifying coil **24** to capture inductive photons from the sending coil **20**, results in loss (by non-capture) of most of the inductive photons from the sending coil **20**. This proportion of captured inductive photons can be increased greatly in an embodiment in which multiple energy-magnifying coils **24** substantially completely surround the sending coil **20**, such as shown in **Fig.4**. In this embodiment, the energy-magnifying coils **24** substantially completely surround the sending coil **20**, and (although six energy-magnifying coils **24** are shown) as few as three energy-magnifying coils **24** of adequate diameter, still could substantially completely surround the sending coil **20**. There is no limit, except as possibly related to packaging concerns, to the maximum number of energy-magnifying coils **24** which could be used. The depicted configuration of **Fig.4**, has a desirable number of six energy-magnifying coils **24**. In **Fig.4**, the shaded sectors **31**, considered collectively, illustrate that nearly all 360 degrees of inductive-photon radiation **22** from the sending coil **20**, are received by the energy-magnifying coils **24**. Not shown in **Fig.4** are photoconduction exciters (items **26** in **Fig.3**) used for illuminating respective portions of the energy-magnifying coils **24** in a photoconductive form of the apparatus **15**.

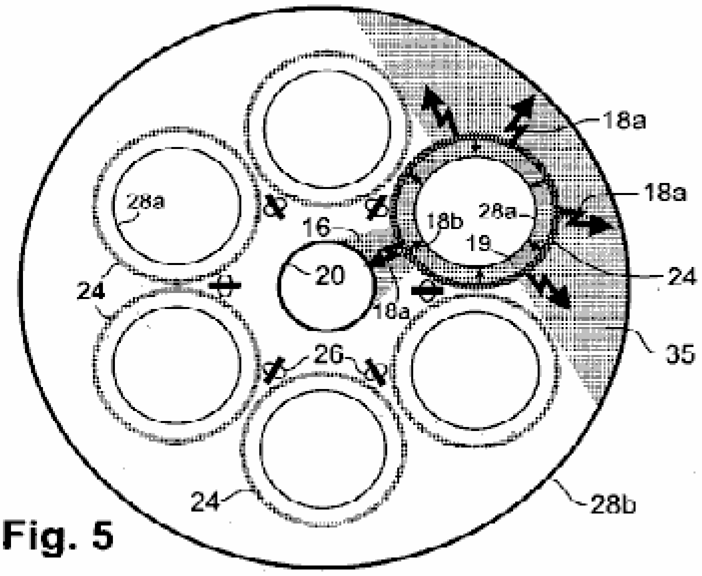

Fig. 5

Fig.4 also depicts respective internal output coils **28a** nested co-axially and co-extensively inside each of the energy-magnifying coils **24**. As discussed earlier, each internal output coil **28a** receives nearly all the inductive-photon radiation propagating radially inwards from the respective energy-magnifying coil **24**. Desirably, the overall energy output of the embodiment of **Fig.4**, can be increased by surrounding the array of energy-magnifying coils **24** with an external output coil **28b**, of which the conductors desirably are made of insulated metallic wire (**Fig.5**). In this embodiment, approximately half of the outwardly propagating magnified inductive-photon radiation (large arrows **18**) from each energy-magnifying coil **24** (one such coil is highlighted in **Fig.5**) is received by the external output coil **28b**. This captured radiation is denoted by the shaded sector **35**. When this externally directed inductive radiation captured from all the energy-magnifying coils **24** is added to all the inwardly directed radiation captured from the energy-magnifying coils **24** by their internal output coils **28a**, **28b**, greatly exceeds the back-force energy directed by the energy-magnifying coils **24** towards the sending coil **20** (the back-force energy from one energy-magnifying coil **24** is shown as the shaded sector **16**). Thus, the resulting energy “leverage” exhibited by the apparatus is increased substantially by including the external output coil **28b**.

The embodiment of **Fig.5** also includes respective arrays (viewed endwise) of light-emitting diodes (LEDs) collectively serving as photoconductor exciters **26** for the energy-magnifying coils **24**. The LED arrays are arranged back-to-back and disposed between adjacent energy-magnifying coils **24**. Each array in **Fig.5** can comprise multiple LEDs or as few as one LED.

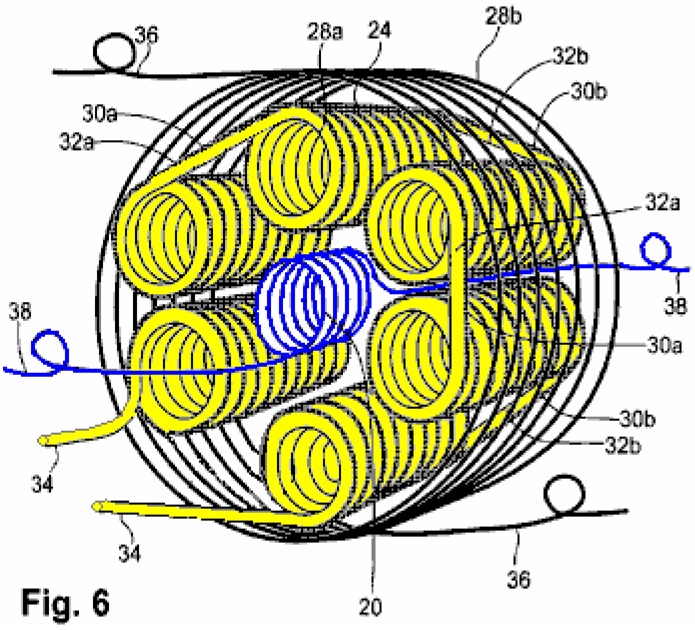

Fig. 6

Fig.6 provides a perspective view of an apparatus **15** having an arrangement of coils similar to the arrangement shown in **Fig.5**. In **Fig.6**, each energy-magnifying coil **24** comprises a helical coil of superconductive or photoconductive material in wire or ribbon (tape-like) form.

Whenever multiple energy-magnifying coils **24** are used, the respective directions of electron flow in them desirably occur in the same circular direction as viewed endwise. Thus, the flow of electrons in all the energy-magnifying coils **24** is clockwise during one phase of an oscillation cycle and counterclockwise during the other phase. The same principle applies to the flow of electrons in the output coils **28a**, **28b**. (But, in such an embodiment, the flow of electrons in the output coils **28a**, **28b**, is in the opposite direction to the electron flow in the energy-magnifying coils **24**). These relationships of electron flow in the coils during a particular phase of an oscillation cycle, are shown in **Fig.7**.

The energy-magnifying coils **24** desirably are connected together in series, using inter-coil connectors **30a**, **30b**, to maintain the same direction of electron flow, which can be clockwise or counterclockwise (as viewed from one end of such a coil). This direction of electron flow in a coil is termed the "handedness" of the coil. If the energy-magnifying coils **24** all have the same handedness, then the ends of adjacent energy-magnifying coils **24** are connected together in a head-to-foot manner progressively in one direction around the group of coils (not shown). ("Head" refers to the forward-facing end, and "foot" refers to the rearward-facing end of the apparatus in relation to the viewer). In this case, the inter-coil connectors **30a**, **30b**, must pass either completely through the apparatus or around the outside of the apparatus for its entire length, which reduces efficiency and can cause undesirable wear if the connectors are subjected to vibrations. A more desirable arrangement is depicted in **Fig.6**, in which short inter-coil connectors **30a**, cross directly head-to-head between one energy-magnifying coil **24** and an adjacent energy-magnifying coil **24**, and short inter-coil connectors **30b** cross over directly foot-to-foot in the next energy-magnifying coils **24**. In this configuration, the handedness of turns of the energy-magnifying coils **24** alternates from right-to-left to left-to-right in adjacent energy-magnifying coils **24**. In the same manner as a right-handed screw advances from head to foot as it is turned clockwise, and a left-handed screw moves in the opposite direction, clockwise electron flow in a right-handed coil advances from head to foot, and clockwise electron flow in a left-handed coil advances from foot to head.

The single-layered internal output coils **28a** in **Fig.6**, present the same situation in which these coils are connected in series. Desirably, the inter-coil connectors **32a** cross over directly from one internal output coil **28a** to the adjacent internal output coil **28a**, head-to-head and the inter-coil connectors **32b** cross over directly foot-to-foot from one internal output coil **28a** to the adjacent internal output coil **28a**. This same handedness convention generally applies to all series-connected internal output coils **28a** connected in this manner. The head-to-head inter-coil connectors **32a** and foot-to-foot inter-coil connectors **32b** for the internal output coils **28a**, need not coincide with the same respective connectors **30a**, **30b** for the energy-magnifying coils **24**.

In another embodiment (not shown), each internal output coil is two-layered, with both leads at either the head or foot. Such a configuration allows for short and direct connections between adjacent internal output coils. Multiple-layered internal output coils may be more efficient, but the extra layers of coiled wire increase the mass of the apparatus, which may be a concern in mobile applications. Multiple wire layers carrying high current may also result in overheating, which may require that some space be left between each internal output coil **28a** and its surrounding energy-magnifying coil **24** to accommodate one or more conduits of a coolant through the apparatus (at a sacrifice of some efficiency). The coolant can be, for example, forced air (in the case of photoconductors or doped semiconductors) or liquefied cryogenic gas (in the case of superconductors).

Fig.6 also shows two external conductors **34** connected to respective internal output coils **28a**. Electrons flow through the conductors **34** and the internal output coils **28a** in series. In addition, two external conductors **36** are connected to respective ends of the external output coil **28b**, and two external conductors **38** are connected to respective ends of the sending coil **20**.

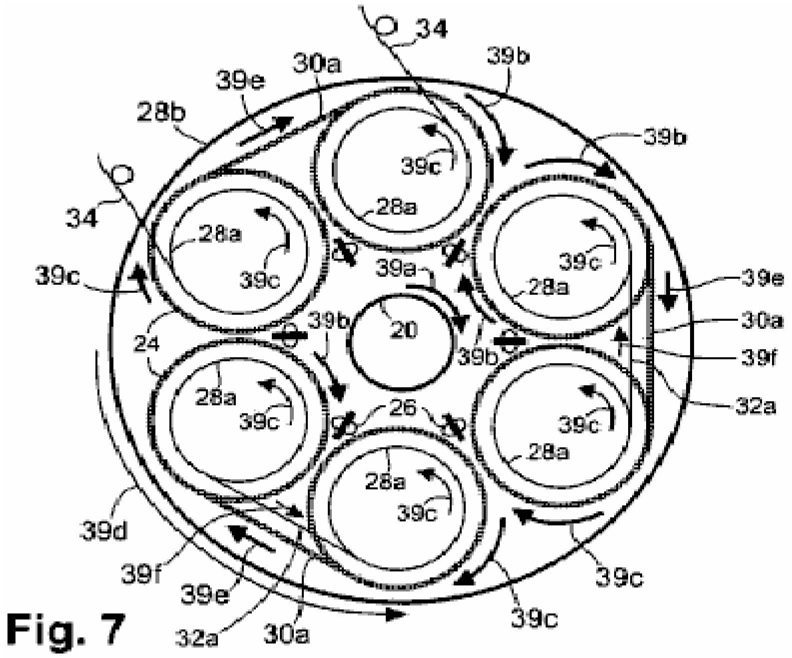

Fig. 7

Fig.7 is a schematic end view of the apparatus of **Fig.6**, showing the relative direction of electron flow in the various coils and in the inter-coil connections described for single-layer coils. At a particular oscillation phase, the clockwise electron flow denoted by the arrow **39a** in the sending coil **20** induces clockwise electron flow **39b** in all the energy-magnifying coils **24**. The magnified radiation from the clockwise electron flow in the energy-magnifying coils **24**, induces counterclockwise electron flow in all the internal output coils **28a**, as indicated by the arrows **39c**. The counterclockwise electron flow, denoted by the arrow **39d**, in the external output coil **28b** is opposite in direction to the electron flow in the energy-magnifying coils **24**.

The electron flow in the inter-coil connectors **30a** extending between adjacent energy-magnifying coils **24** is indicated by the arrows **39e**, and the electron flow in the inter-coil connectors **32a** extending between adjacent internal output coils **28a** is indicated by the arrows **39f**. During the next oscillation phase, all the direction arrows shown in **Fig.7** reverse themselves.

Connecting the internal output coils **28a** together in series is advantages if it is desired to maximise the output voltage from the apparatus **15**. Alternatively, the internal output coils **28a** can be connected together in parallel if it is desired to maximise the output electrical current from the apparatus **15** while minimising the output voltage. In this alternative configuration, all the internal output coils **28a** desirably are wound with the same handedness, with each coil **28a** having two respective leads. The leads at one end (e.g., the foot end) of the coils **28a** are connected to each other, and the leads at the other end (the head end) of the coils **28a** are connected to each other. The resulting parallel-coil system is connected in a conventional manner in other circuitry of the apparatus (not shown).

Further alternatively, the internal output coils **28a** can be connected together so as to provide more than one output circuit (so long as sufficient energy is produced for use as feedback to the sending coil **20** and for use in establishing favourable conditions for producing abundant low-mass electrons). Alternatively, the relative voltage(s) and current(s) of output power can be varied by changing the ratio of the number of turns in the energy-magnifying coils **24** to the number of turns in the internal output coils **28a**. Alternatively again, the energy-magnifying coils **24** can be employed in a separate manner to provide more than one energy-magnifying unit. Each unit can comprise one or more energy-magnifying coils that can serve its respective circuit of internal output coils.

The two conductors **36** connected to the external output coil **28b**, can be connected to the internal output coils **28a** or can be used (without being connected to the internal output coils **28a**) with only the external output coil **28b** to provide an independent output circuit (not shown). The two conductors **38** connected to the sending coil **20**, are connected in the feed-back loop **46** such that electron flow in the sending coil **20** is in the same circular direction as in the internal output coils **28a**.

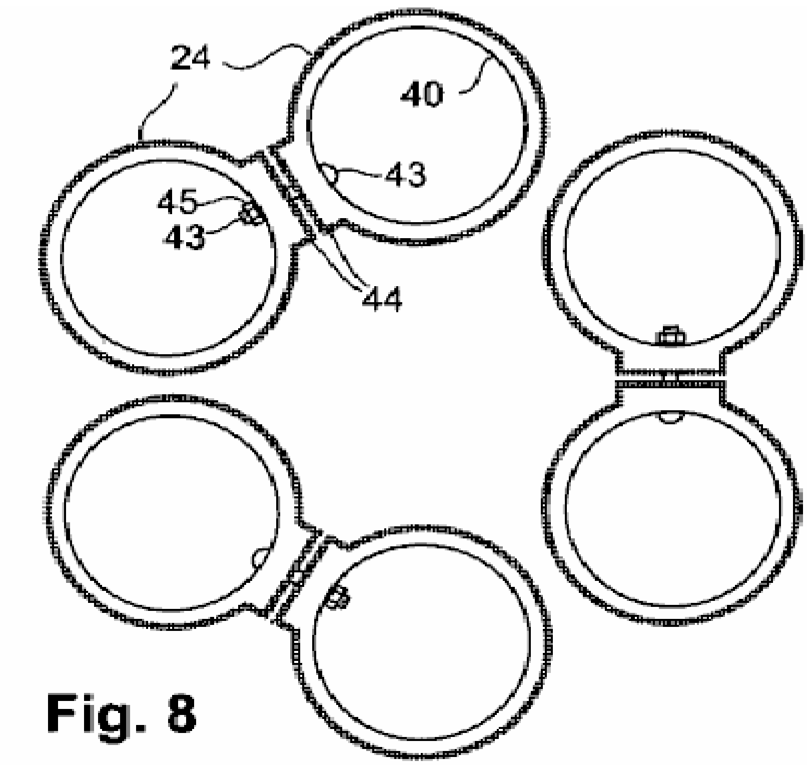

Fig. 8

Fig.8 depicts yet another embodiment of the apparatus **15**, in which each energy magnifying coil **24** comprises a thin film or thick film of a polycrystalline or other suitable photoconductor deposited in a helical manner directly on to a tubular substrate **40** desirably made of ceramic or other suitable dielectric material. on each energy magnifying coil **24**, the polycrystalline photoconductor is formed as a helical band on the outside of the tubular substrate **40**. The helical band of photoconductor can include a thin film of metal embedded within it. In certain cases, inter-coil connections between adjacent energy magnifying coils **24** can be made by extending the deposited photoconductor from the helices to contact areas **44** situated at the ends of the tubular substrates **40** and extending toward contact areas **44** on adjacent tubular substrates **40**. Electrical contact between adjacent energy magnifying coils **24** is made under moderate pressure via the contact areas **44**, which are shown in **Fig.8**. To distinguish the individual contact areas **44**, they are shown in a separated position before being pressed together to make contact. To maintain the integrity of the contact areas **44**, the energy magnifying coils **24** can be held together in mutual proximity by any of various non-metallic fasteners to make continuous electrical contact between all of the photoconductive portions. For example, bolts **43** and nuts **45** made of a plastic such as nylon, or other dielectric material, can be used. Another variation is to maintain contact pressure of one coil to the next by means of spring clips. Thus, in one embodiment, the energy magnifying coils **24** are connected so as to be in endless contact with each other, with no capacitative break between them. The remainder of the apparatus can be constructed in the same manner as the photoconductor or doped-semiconductor embodiment described above, wherein the same attention to the direction of electron flow in respective coils is observed.

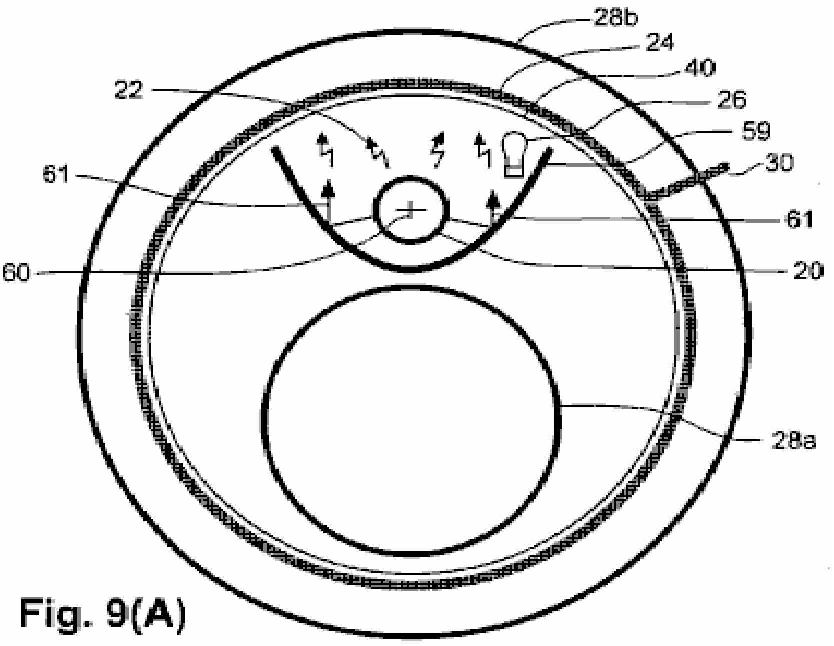

Fig. 9(A)

The coil configuration of yet another embodiment is shown in **Fig.9A** and **Fig.9B**. A tubular substrate **40**, supports a helical, thin film or thick film, dipole-type of energy-magnifying coil **24** that is nested inside and coaxial with a single external output coil **28b**. Nested inside the tubular substrate **40**, and with respective axes parallel to the axis of the tubular substrate **40**, are a sending coil **20** and an internal output coil **28a**. The sending coil **20** and the internal output coil **28a**, are positioned on opposite sides of a reflective metallic separator **59**. The separator **59** is substantially parabolic in cross-section throughout its axial extent, and is positioned so that the longitudinal edges are touching, or nearly touching, the tubular substrate **40**. The separator **59** can be composed of common, non-magnetic metal such as aluminium or magnesium. The sending coil **20** is positioned on the concave side of the separator **59**, with the axis of the sending coil **20** being positioned at the geometric focus **60** of the parabola and disposed parallel to the axis of the energy-magnifying coil **24**. The energy-magnifying coil **24** in this embodiment, comprises a thin film or thick film photoconductor formed helically on the tubular substrate **40**. A photoconduction exciter **26** is positioned inside the separator **59**. (The tubular substrate **40**, is made of a rigid material that is transparent to radiation produced by the photoconduction exciter **26**). All the other forms of the energy-magnifying coil **24** as described herein, including the superconducting form, can be employed in this embodiment.

The separator **59**, serves a double purpose. One purpose is to direct towards the energy-magnifying coil **24** the portion of the inductive-photon radiation **22** which is not otherwise directed towards the separator, as shown by the reflected-photon rays **61** in **Fig.6A**. (Reflection of these radiated photons does not change the directionality of the transverse force which these photons convey). Another purpose of the separator **59** is to serve as a shield to restrict the amount of inward radiation **18b** from the energy-magnifying coil **24** which is returned as a back-force to the sending coil **20**. The restricted back-force radiation is shown by the shaded area **63** in **Fig.9B**.

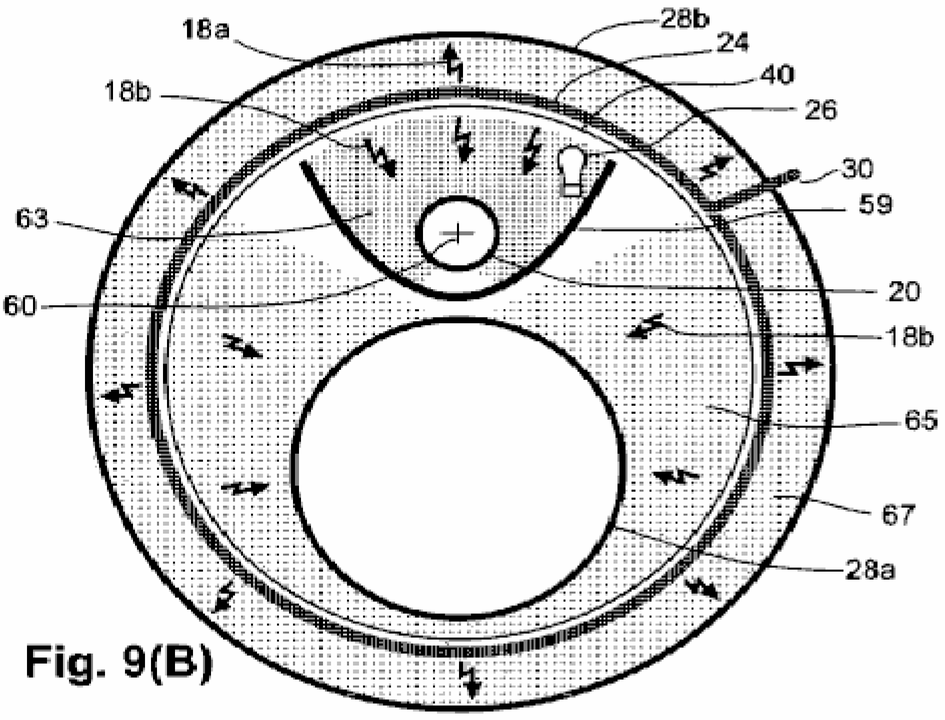

Fig. 9(B)

The portion of the inwardly directed, magnified inductive-photon radiation **18b** which is received by the internal output coil **28a**, is denoted by the shaded area **65**. The proportional amount of outwardly directed magnified radiation **18a** from the energy-magnifying coil **24** which is received by the external output coil **28b**, is shown by the shaded area **67**. The sum of the magnified radiation in the area **65** which reaches the external output coil **28b**, substantially exceeds the magnified radiation in the area **63** (the latter serving as a back-force on the sending coil **20**). This excess of utilised energy over the back-force energy, provides energy leverage. This embodiment also includes a starting mechanism, and initial power source for the photoconduction exciter, a work loop, and a feedback loop (not shown) as provided in the other embodiments described herein.

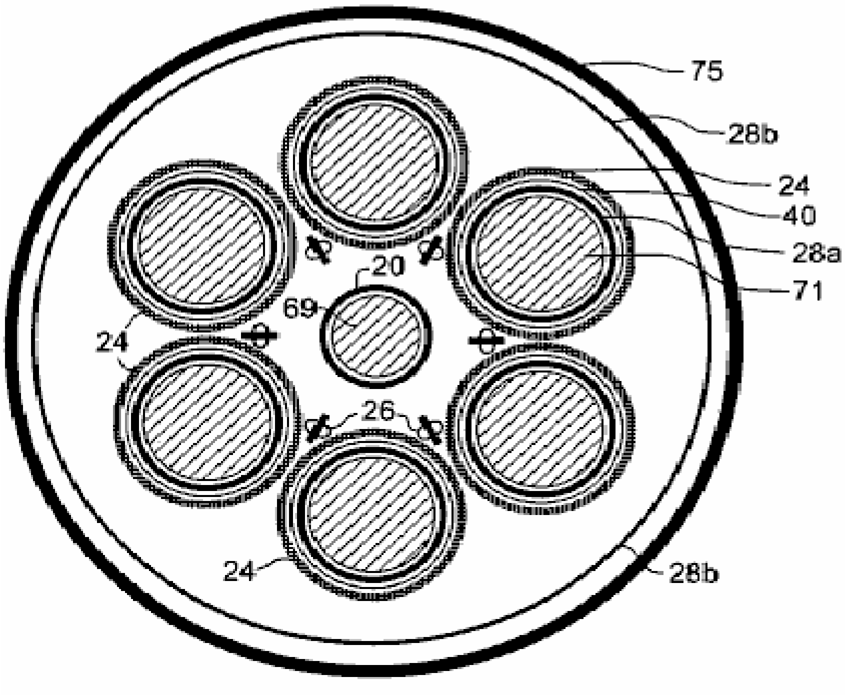

Fig. 10(A)

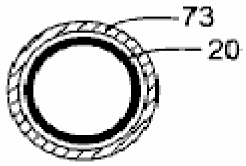

Fig. 10(B)

Certain features can be incorporated with any of the embodiments described herein, to add functional practicality. For example, referring to the schematic representation of a coil configuration shown in end view in **Fig.10A**, a ferromagnetic core **69** can be placed inside the sending coil **20**, and ferromagnetic cores **71** can be placed inside respective internal output coils **28a**. These cores increase the inductance of the apparatus, which lowers the frequency of the electrical oscillations produced by the apparatus. Although increases in inductance can cause the output voltage and current to be out of phase, the phase difference can be corrected by adding capacitance to the circuitry by conventional means. Also shown, is an external metal shield which completely surrounds the apparatus to block any radiation from the device that could interfere with radios, televisions, telephones, computers and other electronic devices. the shield can be comprised of any of various non-magnetic metals such as aluminium or magnesium.

An alternative means of increasing the inductance of the apparatus is shown in **Fig.10B**, which is a variation of the end view of just the sending coil **20** that is depicted in **Fig.10A**. In **Fig.10B**, a ferromagnetic sleeve **73** is placed coaxially around the sending coil **20**.

The respective dimensional ratios of various components generally remain similar with respect to each other for different apparatus sizes, except for the longitudinal dimension, which generally can be as short or as long as desired, up to some practical limit. The respective gauges of wires used in the sending coil **20** and the output coils **28a** and **28b**, are commensurate with the electric current carried by these wires, and the respective thickness of insulation (if used) on the wires is commensurate with the voltage.

The outside diameter of the internal output coils **28a** desirably is only slightly less than the inside diameter of the respective energy-magnifying coils **24**, as shown in **Fig.6**, **Fig.7** and **Fig.8**, thereby ensuring close proximity of each internal output coil **28a** with its respective energy-magnifying coil **24**. At a sacrifice in efficiency, the outside diameter of the internal output coils **28a** can be made smaller, to allow space for heat from the current-carrying wires to escape or be removed by a coolant such as forced air in the case of a photoconductor type or doped semiconductor type apparatus, or by a cryogenic liquefied gas in the case of a superconductor type apparatus.

Also, desirably, the external output coil **28b** is connected in series with the internal output coils **28a** to maximise the output voltage from the apparatus **15** and to minimise heat produced by electric currents in the apparatus. The output voltage can be stepped down and the output electric current stepped up to normal operating ranges by using a transformer, wherein the primary of the transformer would comprise the load in the work loop **48**.

As discussed above, each energy-magnifying coil **24** can comprise a photoconductor or doped semiconductor formed as a helical pattern on a respective thin-walled tubular substrate provided with extended, raised contact surfaces at each end. The energy-magnifying coils **24** desirably are connected electrically (rather than capacitatively) to each other in series at the raised contact surfaces. The photoconductive coils desirably are coated using clear varnish or enamel to provide electrical insulation and to protect the photoconductors from oxidation and weathering.

Where the low-mass photoconducting electrons in the energy-magnifying coils **24** are present in a concentration which is insufficient for capturing most of the inductive-photon radiation from the sending coil **20**, each energy-magnifying coil desirably includes a thin metallic band. The metal desirably is in intimate contact with the low-mass-electron carrier. the metal can be on the exterior of a doped semiconductor, or it can be embedded in a photoconductor band of the coil to capture the inductive radiation and set up an electric field which, in turn, assists in accelerating the low-mass electrons. In the photoconductive embodiment, the photoconductive material desirably is disposed all around the metallic band so that the low-mass electrons are conducted on the outer side as well as the inner side and edges of the photoconductive band on the portion or portions which are exposed to illumination on the outside. The width of the metal band desirably is sufficient to capture as much of the inductive-photon radiation from the sending coil as is practical, since gaps between turns of the metal band in the energy-magnifying coil permit the sending coil's inductive radiation to pass through to the internal output coil. Since the sending coil's radiation is a half-cycle out of phase with the inductive radiation from the low-mass electrons, all the sending coil radiation which reaches the output coil, reduces the output efficiency of the apparatus.

Appropriate photoconductive materials (e.g. cadmium sulphide, cadmium selenide) for forming the energy-magnifying coils **24** are commercially available. The photoconductive material can be a single material or a mixture of materials, and can be formed by, for example, sputtering. A mixture of cadmium sulphide and cadmium selenide can be adjusted optimally to yield energy-magnifying coils exhibiting maximal energy-magnifying factors at a peak wavelength matching the brightest photoconduction exciters **26** which are available.

With respect to the photoconduction exciters **26**, photo-excitation of the energy-magnifying coils **24** can be provided by one or more LEDs, either surface-emitting or edge-emitting, for example, selected to produce an output wavelength matched to the peak photoconduction wavelength of the energy-magnifying coils **24**. In the embodiment of **Fig.7** and **Fig.10A**, individual LEDs **26** are positioned in linear arrays mounted back-to-back on respective mounting bars. The assembled mounting bars with LEDs are placed in the gaps between adjacent energy-magnifying coils **24** to illuminate at least the sides of the respective energy-magnifying coils **24** which receive inductive-photon radiation from the sending coil **20**. LEDs are advantageous compared to incandescent lamps because LEDs produce more light with less heat and have a much longer operational lifetime than incandescent lamps. LEDs are also preferred because of their small size which facilitates fitting a large number of them into the relatively small space between adjacent energy-magnifying coils **24**.

Whereas the invention has been described in connection with several representative embodiments, the invention is not limited to those embodiments. On the contrary, the invention is intended to encompass all modifications, alternatives and equivalents as may be included within the spirit and scope of the invention, as defined by the appended claims.

References Cited in the Text

Helmholtz, H., 1847, *Uber die Erhaltung der Kraft*, G.A.Reimer, Berlin. *On the Conservation of Force*, English translation with Appendices of 1881, Wesleyan university Press, Middletown Conn., 1971.

Leimer, E., 1915, *"Uber Radiumantennen", Elektrotechnische Zeitschrift*, Heft 8, Feb. 25, 1915. English translation: "On Radium Antannae" *The Electrician*, Apr. 21 1916, and "Radium and Aerials" *Scientific American,* Supplement No. 2127, Oct. 7, 1916.

Anon, 1919a, "Youthful Seattle Inventor and his Invention" (photos and captions), *Seattle Post-Intelligencer*, Dec. 17, 1919.

Anon., 1919b, "Youth's Revolutionary invention is Backed by Professor - Hubbard's New Energy No Fake, Says Seattle College Man", *Seattle Post-Intelligencer*, Dec. 17, 1919,

Anon. 1920a, "Hubbard Coil Runs Boat on Portage Bay Ten Knots an Hour, Auto Test Next", Seattle Post-Intelligencer, Jul. 29, 1920.

Anon., 1920b, "Drives Boat with New Electric Generator" (photos and captions), *Seattle Post-Intelligencer*, Jul. 29, 1920.

Anon., 1928a, "Noted Flyers Try Out New Motor at Selfridge Field" (photo), *Detroit Free Press*, Fen. 25, 1928.

Anon., 1928b, "Fuelless Motor Shown; Gets Current From Air", *Detroit Free Press*, Feb. 25, 1928.

White, H. C., 1928c, "Lindbergh Tries Motor Earth Runs", *Detroit Free Press*, Feb. 25, 1928.

Anon., 1928d, "Fuelless Motor Impresses Experts", *New York Times*, Feb. 26, 1928.

Anon., 1928e, "No-Fuel Motor Finds Backers", *Detroit News*, Feb. 26, 1928.

Anon., 1928f, "Fuelless Motor Is A Generator", *New York Times*, Feb. 27, 1928.

Anon., 1928g, "Fuelless Motor Ends 2-year Task", *Seattle Post-Intelligencer*, Feb. 27, 1928.

Bermann, R. B., 1928 h, "Hubbard Believes Mystery Motor Based Upon His Own Invention", *Seattle Post-Intelligencer*, Feb. 27, 1928.

Ampere, A. M., 1820, "Memoire", *Annales de Chimie et de Physique*.

Ampere, A. M., 1825, "Memoire", *Annales de Chimie et de Physique*.

Weber, W., 1846, *Elektrodynamische Maassbestimmungen*, Weidmann'sche Buchhandlung, Leipzig.

Gauss, C. F., 1835, unpublished notes originally published posthumously in 1865 as "Grundgesetz Fur Alle Wechselwirkungen Galvanisvcher Strome" in Werke, Vol. 5, pp. 616-620; the correspondence from Gauss to Wilhelm Weber (1845) is on pp. 627-629.

Maxwell, J. C., 1873, *A Treatise on Electricity and Magnetism*, Clarendon Press, Oxford.

Larmor, J., 1897, "On the Theory of Magnetic Influence of Spectra; and on the Radiation From Moving Ions", *Phil. Mag* LXIII:503-512.

Larmor, J., 1900, *Aether and Matter*, Cambridge University Press.

Rutherford, E., 1911, *Phil. Mag.* XXI:669.

Planck, M., 1911, *Verh. D. Deutsch. Phys. Ges.* XIII:138

Bohr, N., Kramers, H. A., and Slater, J. C., 1924, *Phil. Mag.* XLVII:785

Whittaker, E., 1951, *A History of the Theories of Aether and Electricity*, Thos. Nelson & Sons, London; reprinted by Dover, New York, 1989.

Shpenkov, G. P., and Kreidik, L. G., "Microwave Background Radiation of Hydrogen Atoms", *Revista Ceencias Exastas e Naturais* 4, n.1, pp. 9-18, January/June 2002.

Fowler, W. A., 1983, "Experimental and Theoretical Nuclear Astrophysics; the Quest for the Origin of the Elements", Nobel Lecture, Dec. 8, 1983.

Tifft, W. G., 1976, "Discrete States of Redshift and Galaxy Dynamics I", *Astrophysical Journal* 206:38-56.

Tifft, W. G., 1977, "Discrete States of Redshift and Galaxy Dynamics I I: Systems of Galaxies", *Astrophysical Journal* 211:31-46; and "Discrete States of Redshift and Galaxy Dynamics I I I: Abnormal Galaxies", *Astrophysical Journal* 211:377-391.

Compton, A. H. and Allison, S. K., 1935, "X-Rays in Theory and Experiment" 2nd Ed., Van Nostrand, New York.

Pops, H., 1997, "The Metallurgy of Copper Wire", *Innovations*, Dec. 1997 (Copper Development Assoc.).

Lapp, R. E. and Andrews, H. L., 1954, *Nuclear Radiation Physics*, Prentice-Hall, Englewood Cliffs, N.J.

Bardeen, J., 1942, "Theory of Superconductivity" (abstr.), *Phys. Rev.* 59:298.

Dehmelt, H. G., 1989, "Experiments with an Isolated Subatomic Particle at Rest", Nobel Lecture, Dec. 8, 1989.

File, J. and Mills, R. G., 1963, "Observation of Persistent Current in a Superconducting Solenoid", *Phys. Rev. Lett.* 10(3), Feb. 1, 1963.

JOHN REARDON: AC GENERATOR

US Patent 6,946,767 **20th September 2005** **Inventor: John Reardon**

ALTERNATING CURRENT GENERATOR

This is a reworded excerpt form this patent which shows a high-efficiency electrical generator of alternating current. It is stated that this generator design is not affected by Lenz's law and the experimental results showed a 13,713% improvement over conventional power output.

ABSTRACT

An alternating current electrical generator creates three different and distinct magnetic fields between wound coil elements and rotating magnets, two fields of which are induced fields caused by magnet rotation. A plurality of magnets are positioned such that they extend outwardly from a rotating shaft. The magnets are circumferentially spaced around the shaft such that the north polar end of one magnet follows the south polar end of the next magnet or such that the polar end of one magnet follows a magnet with the same polar end. A plurality of stationary coil elements are positioned in spaced relation to the magnets. The coil elements each have electrical windings and metal cores which extend the lengths of the coil elements. The magnets rotate in spaced relation to the ends of the coil elements in such a way that the magnets' flux lines cut the cores located at the centre of each of the coil elements. This induces alternating electric current that oscillates back and forth along the lengths of the cores. This oscillating current creates an expanding and collapsing set of magnetic flux lines which expand and contract through every inch of the coil element's windings. This expanding and collapsing magnetic field induces an expanding and collapsing magnetic field and an alternating electric field in the coil elements.

US Patent References:

4009406	Feb, 1977	Inariba.
4823038	Apr, 1989	Mizutani et al.
5696419	Dec, 1997	Rakestraw et al.
5821710	Oct, 1998	Masuzawa et al.
5973436	Oct, 1999	Mitcham.
6069431	May, 2000	Satoh et al.
6373161	Apr, 2002	Khalaf.
6462451	Oct, 2002	Kimura et al.
6541877	Apr, 2003	Kim et al.
6717313	Apr, 2004	Bae.

BACKGROUND OF THE INVENTION

Alternating current generators are rotating devices which convert mechanical energy into electrical energy. To generate an electromotive force by mechanical motion, there must be movement between an electric coil and a magnetic field in a manner that will cause a change in the flux that passes through the coil. Fundamentally, the induced electromotive force is brought about by a change in the flux passing through the coil.

The use of electromagnets, magnets and magnet components in generators to create the magnetic field and its subsequent effect on electric coils to ultimately generate electric current is well known. Such magnetic generators operate by using the repelling forces created by the effect of changing polarities of both permanent and electromagnets. For instance, there are electrical generating devices which employ electromagnets which are fixed in position and which induce current by being selectively energised, as iron or other magnetic metal discs, bars, or similar elements are rotated at or around the magnets. Other systems employ electromagnet or permanent magnets which are rotated, by various means, in relation to iron cores or coils, inducing an alternating electrical current within the coils.

However, prior alternating current generators which employ rotating magnet systems are inefficient and generally fail to deliver adequate current, in relation to the mechanical effort applied.

SUMMARY OF THE INVENTION

It is thus an object of the present invention to address the limitations and disadvantages of prior alternating electric current generators.

It is an object of the present invention to provide an alternating current generator which generates a substantial amount of electrical current efficiently and effectively.

It is a further object of the present invention to provide an alternating current generator which employs rotating magnets to induce increased alternating electrical current within the iron cores of electrical coils.

It is still another object of the present invention to provide an alternating current generator which can be simply and readily manufactured and be operated with high efficiency.

These and other objects are obtained by the present invention, an alternating current electrical generator which creates three different and distinct magnetic fields between wound coil elements and rotating magnets, two fields of which are induced fields caused by magnet rotation. A plurality of magnets are positioned such that they extend outwardly from a rotating shaft. The magnets are circumferentially spaced around the shaft such that the north polar end of one magnet follows the south polar end of the next magnet or such that the polar end of one magnet follows a magnet with the same polar end. A plurality of stationary coil elements are positioned in spaced relation to the magnets. The coil elements each have electrical windings and metal cores which extend the lengths of the coil elements. The magnets rotate in spaced relation to the ends of the coil elements in such a way that the magnets' flux lines cut the cores located at the centre of each of the coil elements. This induces alternating electric current that oscillates back and forth along the lengths of the cores. This oscillating current creates an expanding and collapsing set of magnetic flux lines which expand and contract through every inch of the coil element's windings. This expanding and collapsing magnetic field induces an expanding and collapsing magnetic field and an alternating electric field in the coil elements.

The novel features which are considered as characteristic of the invention are set forth in particular in the appended claims. The invention itself, however, both as to its design, construction, and use, together with additional features and advantages thereof, are best understood upon review of the following detailed description with reference to the accompanying drawings.

BRIEF DESCRIPTION OF THE DRAWINGS

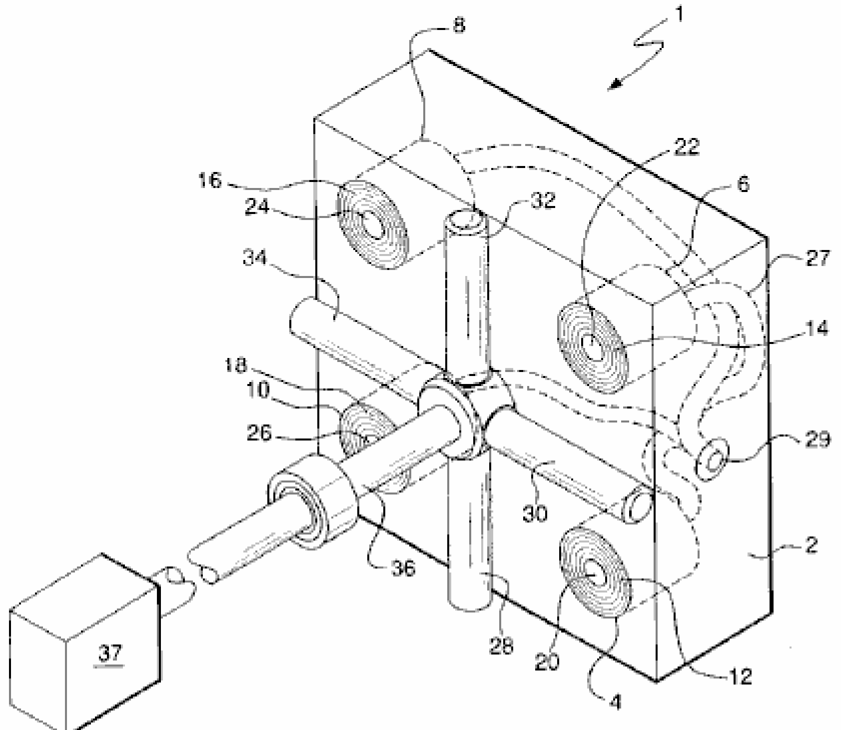

FIG. 1

Fig.1 is an isometric representation of keys components of the present invention.

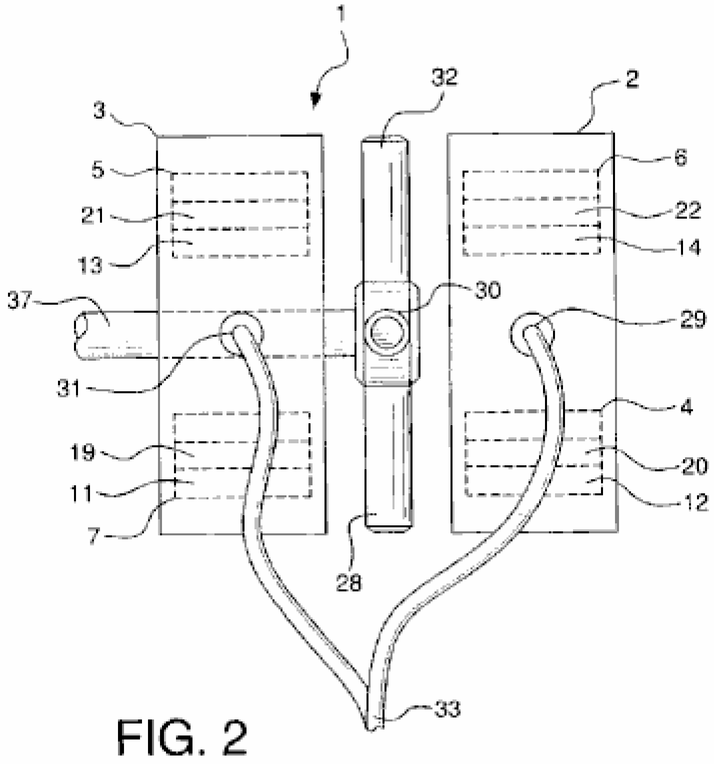

FIG. 2

Fig.2 is a side view representation of the present invention showing the two housed sets of coil elements and their relationship with the magnets.

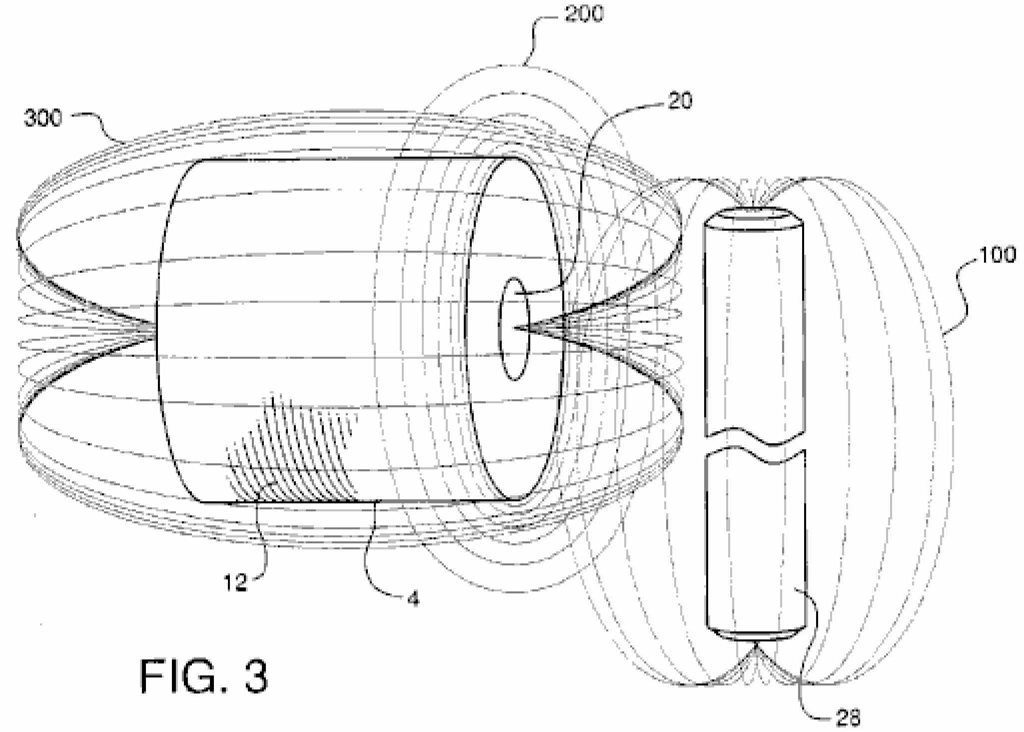

FIG. 3

Fig.3 is an explanatory view, showing the generation of flux lines which forms the basis for the operation of the present invention.

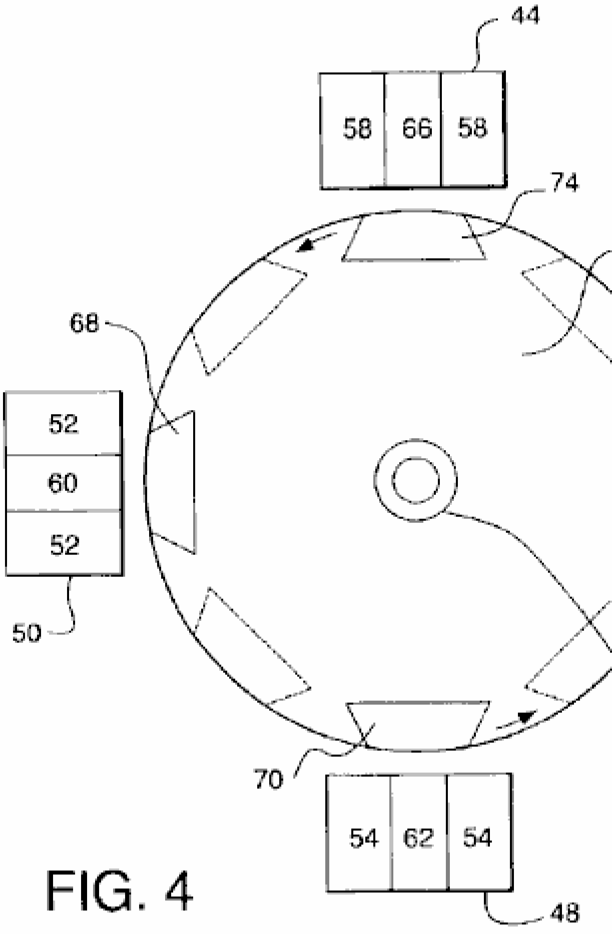

FIG. 4

Fig.4 is an alternate embodiment of the present invention.

DETAILED DESCRIPTION OF THE INVENTION

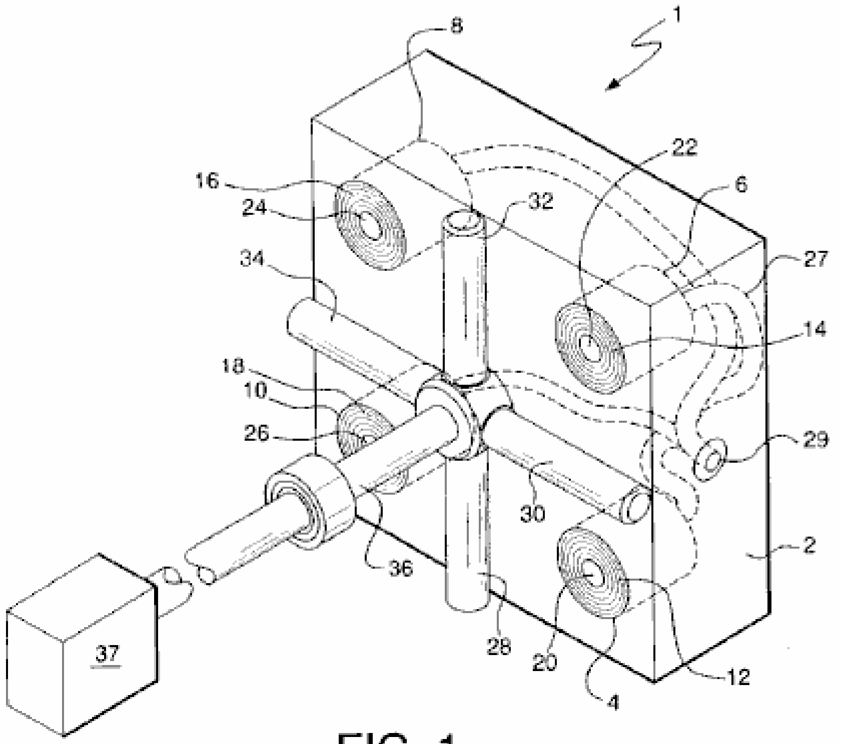

FIG. 1

Fig.1 and **Fig.2** show a clear depiction of the components of alternating current generator 1 of the subject invention. Generator 1 comprises housings **2** and **3**. For simplicity purposes and ease of understanding, only housing 2 is shown in **Fig.1**. It must be understood, however, that generator 1 of the present invention is configured for use with both housings **2** and **3**. Housing **2** contains coil elements **4**, **6**, **8** and **10**. Each coil element comprises multiple windings **12**, **14**, **16**, and **18**, respectively, wound around inner steel or similar metal cores **20**, **22**, **24**, and **26**, respectively. Each steel core extends the full length and directly through each of the coil elements. Coil elements **4**, **6**, **8**, and **10** are mounted within housing **2**, such that the end surfaces of the coil elements and the ends of cores **20**, **22**, **24**, and **26** are positioned flush with the external surface of housing **2**.

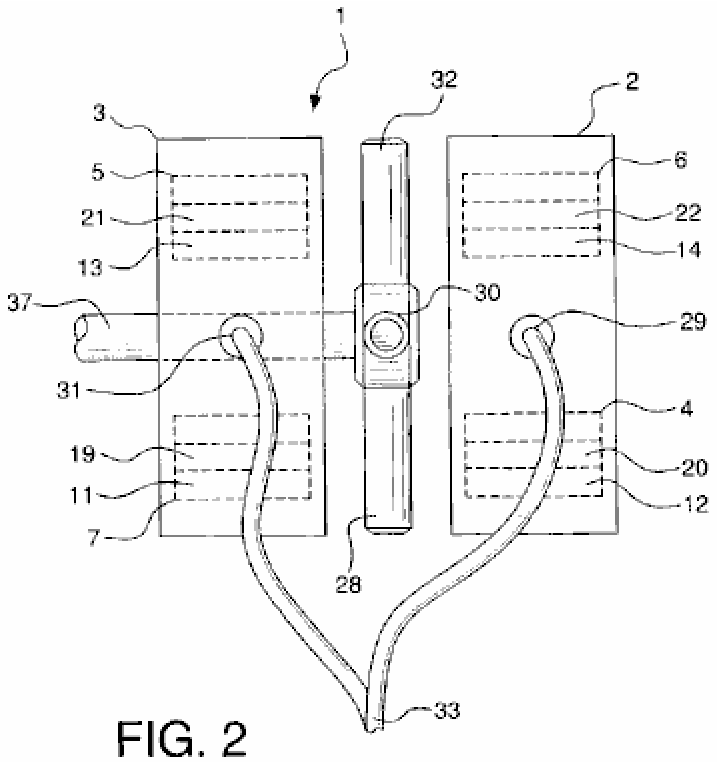

FIG. 2

Housing **3** also contains four coil elements positioned identically as has been described with regard to housing **2**. Two of these coil elements **5** and **7** are shown in **Fig.2**. Coil element **5** has multiple windings **13** and centre core **21** and coil element **7** has multiple windings **11** and centre core **21**.

Magnets **28**, **30**, **32**, and **34** are secured to shaft **36**, which is configured to be rotated by conventional power source **37**, such as a diesel engine, turbine, etc. Magnets **28**, **30**, **31**, and **32** all have ends with outwardly extending polarities. Magnets **28**, **30**, **32**, and **34** are positioned in spaced relation to the ends of exposed cores **20**, **22**, **24** and **26** of coil elements **4**, **6**, **8**, and **10** and in spaced relation to the ends of the four exposed cores in the four coil elements located in housing **3**, cores **19** and **21** being shown in **Fig.2**. All magnets are equidistantly spaced on and around shaft **36**, such that the outwardly extending pole of one magnet circumferentially follows the outwardly extending pole of the next magnet. The north polar end of one magnet may follow the south polar end of the next magnet or the polar end of one magnet may follow a magnet with the same polar end.

While four magnets and four cores are shown, it is contemplated that additional magnets and cores could be employed in the generator. Also, while permanent magnets are shown in the drawings, electromagnets could also be used, as they produce the same magnetic flux.

Alternating electrical current is generated when power source **37** rotates shaft **36**, thus causing rotation of magnets **28**, **30**, **32**, and **34** in spaced, adjacent relation to the ends of cores **20**, **22**, 24, and **26** of coil elements **4**, **6**, **8**, and **10**, and in spaced, adjacent relation to the ends of cores **19** and **21** of coil elements **7** and **5** and the ends of the cores of the other two similarly aligned coil elements in housing **3**. The current which is generated is transmitted through electrical conductive wiring **27**, which merges at connection points **29** in housing **2** and **31** in housing **3**, for the consolidated transmission at connection point **33** of the electricity produced.

As best represented in **Fig.2**, when magnet **28** is rotated in space relation to the end of core **20** of coil element **4**, flux lines **100** of the magnet cut the core at the centre of the coil element. This induces an alternating electrical current that oscillates back and forth along the length of core **20**. This oscillating current creates an expanding and collapsing set of magnetic flux lines **200** which expand and contract through every inch of coil windings **12**. Expanding and collapsing field **200** induces an alternating electric field in coil element **4** which is accompanied by an expanding and collapsing magnetic field **300**. It is noted, significantly, that none of the magnetic field lines **100**, **200** and **300**, act in a negative fashion or in an opposing action. This allows the subject invention to overcome the limitations of Lenz's law, which states that whenever there is a change in magnetic flux in a circuit, an induced electromotive force is set-up tending to produce a current in a direction which will oppose the flux change.

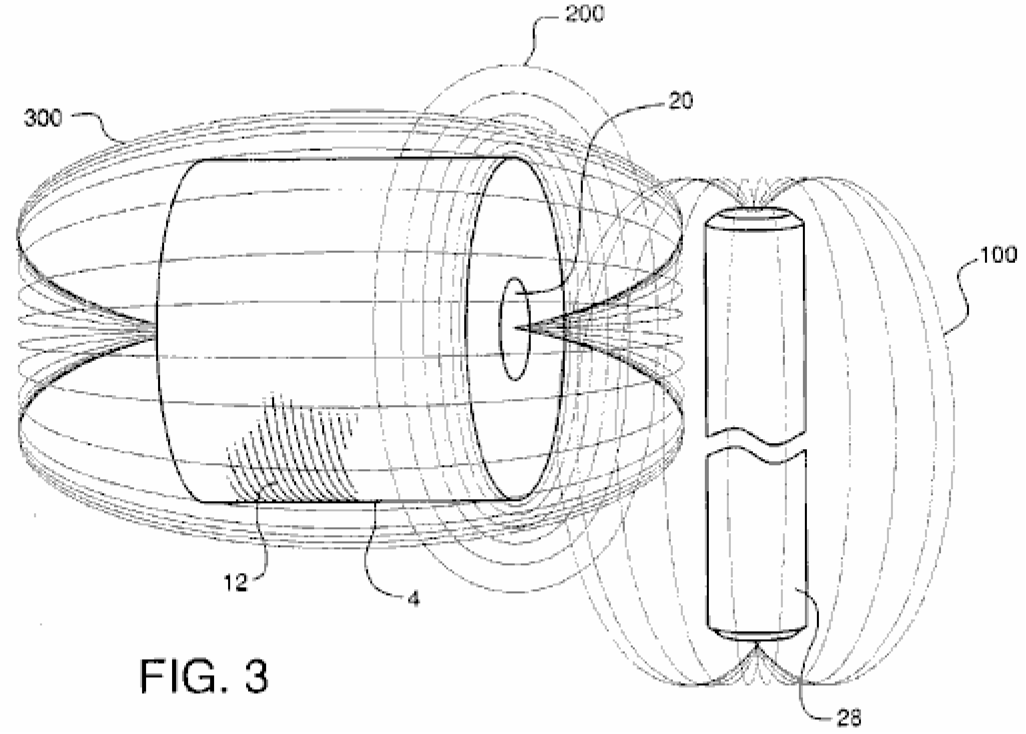

FIG. 3

Fig.3 illustrates an alternate embodiment of the invention to that which is shown in **Fig.1**. As shown in **Fig.3**, coil element **44** with outer windings **58** and inner steel core **66**, coil element **46** with windings **56** and core **64**, coil element **48** with windings **54** and core **62**, and coil element **50** with outer windings **52** and core **60** are positioned adjacent to rotor **67**, which is mounted on shaft **69**. Magnets **68** and **72** are mounted on rotor **67** such that the north poles of the magnets are positioned in spaced relation to coil elements **44**, **46**, **48** and **50**. Magnets **70** and **74** are mounted on rotor **67** such that the south poles of the magnets are also positioned in spaced relation to coil elements **44**, **46**, **48**, and **50**. All magnets are fixedly mounted on rotor **67** such that a north pole of one magnet circumferentially follows a south pole of the next magnet in line. The contemplated gap between the magnets and coil element cones is approximately 0.0001 of an inch, although the scope and use of the invention should not be deemed restricted to this distance.

As in the prior embodiment, rotation of magnets **68**, **70**, **72**, and **74**, by rotation of shaft **69** and hence rotor **67**, causes the flux lines of the magnets to cut cores **60**, **62**, **64**, and **66** of coil elements **44**, **46**, **48**, and **50**, eventually resulting in the output of electrical current as previously described.

It is noted that the larger the diameter of rotor **67**, the more coil elements can be positioned around the rotor. The greater the number of coil elements, the slower rotor **67** needs to rotate; however, there is a power loss in so doing. In addition, while rotor **67** is shown as being circular, it may be as square in shape or formed of as other appropriate multi-sided configurations.

This unique way of generating electricity allows generation of more electrical power, e.g. anywhere in the range of 4 to 137 times more power, than prior, conventional means. It also has the advantage of obtaining unity power with very little effort.

As evidence of such power gains, reference is made to the below outlined experimental outputs from coils and magnets which produced electric power the conventional way compared with the subject invention. The conventional way of generating power, for purpose of the following experimental outputs, as referenced herein, is accomplished by cutting the wires, not the cores, of the coil's windings with the magnet’s flux.

In this regard, proof is also provided that the herein described method of generating electrical power is not affected by Lenz's Law, by reference to the readings obtained by the conventional methods as the rpm and size of the coil increase. With conventional methods, the values do not change linearly, but are less because Lenz's Law restricts the outputs from increasing proportionally to the speed and size of the coil. In comparison, however, in the method of producing power of the subject invention, there is an increase in the readings of V (voltage), I (current), and P (power) which are actually larger than anticipated.

It is also noted that, just like a transformer, when the number of turns ratio is increased, V increases and I decreases, which is exactly what is seen at the various rpm readings for the different size coils. However, they do not increase or decrease proportionally.

Thus, this presents the ideal model for producing electrical power that corresponds to the general law that states that as the speed increases, the voltage will increase proportionally, through the equation:
V = q (charge) × v (velocity) × B (magnetic field strength). This also holds true for a coil, in that transformers increase proportionally to the turns ratio.

With reference to the voltage outputs for each of the coils, 1100T, 2200T and 5500T, it is seen that they are consistent with the types of voltage outputs for a transformer action. That is to say, as the turns ratio goes up in a transformer so does the voltage. Since the increases in voltage between the number of turns is not exactly 2 to 5 times, one can pick any one of the coils and assume it is accurate and adjust the other coils accordingly. Thus, by fixing the 1100T coil, the other coils become 2837T and 5896T respectively. By fixing the 2200T coil, the other coils become 853T and 4572T respectively. And by fixing the 5500T coil, the other coils become 1026T and 2646T respectively. Also, if the adjustments are made as described here, i.e. that the coils are bigger than originally thought, and they are applied to the voltages for the conventional method of generating power, the voltages do not increase proportionally but are actually smaller than they are supposed to be, additional proof that Lenz's Law has application to conventional generators, but not to this invention.

The proportional changes in the voltage relative to speed can also be seen. Thus, considering the 350 RPM speed as accurate, the 1200 RPM and 1300 RPM speeds will adjust to 906 RPM and 1379 RPM respectively. Considering the 1200 RPM speed as accurate, the 350 RPM and 1300 RPM speed becomes 464 RPM and 1826 RPM respectively. And finally, considering the 1300 RPM speed as accurate, the 350 RPM and 1200 RPM speeds become 330 RPM and 854 RPM respectively.

It is noted that in using the various RPM readings based upon the above, it is seen that, in the conventional way of generating power, there are losses associated with the measured values. The calculated values again show the application of Lenz's Law in the conventional way of generating power, but not to this invention. In fact, whether or not there is an adjustment of RPM speed or coil size, the power generation of this invention is in no way affected by Lenz's Law.

Since Lenz's Law has no effect in this generator, it can be assumed that the voltages increase proportionally to the speed of the magnets rotation. Therefore, one can extrapolate the expected voltages at 1800 RPM, the speed necessary to create 60 Hz. With regard to this generator, for each of the three coils from the 350 RPM, 1200 RPM and 1300 RPM speeds, the following results (values are based on one coil/magnet.):

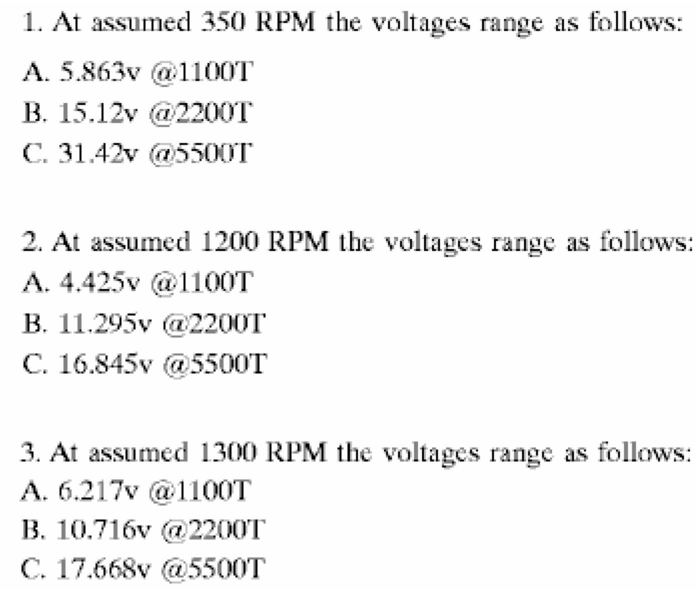

1. At assumed 350 RPM the voltages range as follows:

A. 5.863v @1100T
B. 15.12v @2200T
C. 31.42v @5500T

2. At assumed 1200 RPM the voltages range as follows:

A. 4.425v @1100T
B. 11.295v @2200T
C. 16.845v @5500T

3. At assumed 1300 RPM the voltages range as follows:

A. 6.217v @1100T
B. 10.716v @2200T
C. 17.668v @5500T

The reason the current is not changing linearly as the laws of physics imply from transformers, i.e. as voltage goes up based on the number of turns, the current goes down proportionally to the voltage gain, is due to the fact that the inductive reactance is also going up. See the following chart for the inductive reactances for each coil at each speed.

Impedance (Z) or inductive reactance (X(L)) for a circuit with only a coil in it is the AC voltage divided by the AC current, and the inductance (L) is Z/2 × pi × F (frequency). For a circuit with a resistor and a coil
Z = square root of (R (resistance) squared + X(L) squared)).

The following is the chart of impedance Z for all coil sizes at all speeds for the conventional method of generating power and the method of generating power with this invention:

Where:
"T" stands for Turns,
"CM" stands for Conventional Method and
"SI" stands for Subject Invention:

(1) For 350 RPM for 1100T, 2200T and 5500T coils,

1. (a) CM: 0.57v / 56.6 mA = **10.021** ohms = Z
(b) SI: 1.14v / 106.6 mA = **10.694** ohms = Z

2. (a) CM: 0.93v / 32.4 mA = **28.704** ohms = Z
(b) SI: 2.94v / 70.1 mA = **41.94** ohms = Z

3. (a) CM: 2.09v / 17.3 mA = **120.81** ohms = Z
(b) SI: 6.11v / 37.9 mA = **161.21** ohms = Z

(2) For 1200 RPM for 1100T, 2200T and 5500T coils:

1. (a) CM: 1.45v / 60.2 mA = **23.387** ohms = Z
(b) SI: 2.95v / 141 mA = **20.922** ohms = Z

2. (a) CM: 3.225v / 36.2 mA = **89.088** ohms = Z
(b) SI: 7.53v / 73.5 mA = **102.449** ohms = Z

3. (a) CM: 4.81v / 17 mA = **282.941** ohms = Z
(b) SI: 11.23v / 31.4 mA = **357.643** ohms = Z

(3) For 1300 RPM for 1100T, 2200T and 5500T coils:

1. (a) CM: 1.6v / 83 mA = **19.27** ohms = Z
(b) SI: 4.59v / 157 mA = **29.236** ohms = Z

2. (a) CM: 2.75v / 50.4 mA = **54.455** ohms = Z
(b) SI: 7.74v / 88.5 mA = **87.458** ohms = Z

3. (a) CM: 5.061v / 17.3 mA = **292.543** ohms = Z
(b) SI: 12.76v / 36.4 mA = **350.549** ohms = Z

(4) For 400 RPM for 2300T coil with 24 gauge wire and 0.5" core:

(a) CM: 0.15v / 3.7 mA = **40.541** ohms = Z
(b) SI: 2.45v / 26.2 mA = **93.511** ohms = Z

(5) For 1200 RPM for 2300T coil with 24 gauge wire and 0.5" core:

(a) CM: 0.37v / 2.7 mA = **137.037** ohms = Z
(b) SI: 4.1v / 10.3 mA = **398.058** ohms = Z

(6) For 1400 RPM for 2300T coil with 24 gauge wire and 0.5" core:

(a) CM: 0.58v / 2.4 mA = **241.667** ohms = Z
(b) SI: 8.3v / 7.8 mA = **1065.385** ohms = Z

(7) For 400 RPM for 2300T coil with 24 gauge wire and 0.75" core:

(a) CM: 0.23v / 4.2 mA = **54.762** ohms = Z
(b) SI: 0.37v / 7.2 mA = **51.389** ohms = Z

(8) For 1200 RPM for 2300T coil with 24 gauge wire and 0.75" core:

(a) CM: 0.79v / 3.4 mA = **232.353** ohms = Z
(b) SI: 0.43v / 6.9 mA = **207.246** ohms = Z

(9) For 1400 RPM for 2300T coil with 24 gauge wire and 0.75" core:

(a) CM: 0.79v / 3.21 A = **246.875** ohms = Z
(b) SI: 2.1v / 2.7 mA = **777.778** ohms = Z

(10) For 400 RPM for 6000T coil with 28 gauge wire and 0.5" core:

(a) CM: 0.49v / 2 mA = **245** ohms = Z
(b) SI: 5.48v / 0.13 mA = **421.538** ohms = Z

(11) For 1200 RPM for 6000T coil with 28 gauge wire and 0.5" core:

(a) CM: 1.25v / 1.5 mA = **833.333** ohms = Z
(b) SI: 15.04v / 4.1 mA = **3668.293** ohms = Z

(12) For 1400 RPM for 6000T coil with 28 gauge wire and 0.5" core:

(a) CM: 2.08v / 1.1 mA = **1890.909** ohms = Z
(b) SI: 18.76v / 2.5 mA = **7504** ohms = Z

(13) For 400 RPM for 6000T coil with 28 gauge wire and 0.75" core:

(a) CM: 0.64v / 1.7 mA = **376.471** ohms = Z
(b) SI: 7.97v / 7.4 mA = **1077.027** ohms = Z

(14) For 1200 RPM for 6000T coil with 28 gauge wire and 0.75" core:

(a) CM: 2.08v / 1.3 mA = **1600** ohms = Z
(b) SI: 20.4v / 5.6 mA = **3642.857** ohms = Z

(15) For 1400 RPM for 6000T coil with 28 gauge wire and 0.75" core:

(a) CM: 2.28v / 1.2 mA = **1900** ohms = Z
(b) SI: 28.4v / 2.1 mA = **13523.81** ohms = Z

It is noted that, based upon the variations of wire size, core size and number of turns, the following effects take place:
(a) the smaller the wire size the higher the gains regardless of speed;
(b) the greater the number of turns, generally the higher the gains; and
(c) the smaller the core size the higher the gains.
However, when comparing coils with smaller cores but a higher number of turns, the effects stay about the same.

Finally, the magnets are placed in the rotor so that they are all north or south poles up or out. A pure half-wave generator is created without rectifying the AC signal, which otherwise must be accomplished in a normal AC generator with electronic components in an electronic circuit.

Experimental Values for Producing Power the Conventional Way and with the Subject Invention:

The results were achieved using a small 3" magnet with a diameter of ±2" on a 1.25" high coil of 1" diameter and 3/8" centre/core of steel. (Unknown wire gauge size.)

(a) Conventional method of generating electricity:

1. 0.324 volts
2. 2.782 mA (milli-amps)
3. 0.9014 mW (milli-watts)

(b) Subject invention method of generating electricity:

1. 7.12 volts
2. 17.35 mA
3. 100.87 mW

(c) Associated gains of Volts, Current and Watts:

1. 2,198% over conventional voltage output.
2. 624% over conventional current output.
3. 13,713% over conventional power output.

The following results show the voltage, current and power outputs for an 1100, 2200 and 5500 turn coil of 20 gauge copper wire, 6" in length, 3" in diameter with a 0.75" core of steel. The results are those taken at 350 rpm, 1200 rpm and 1300 rpm.

(A) 350 RPM for an 1100 turn coil

	Volts	**mA**	**mW**
(a) Conventional method:	0.57	56.6	32.3
(b) Subject invention method:	1.14	106.6	121.5
(c) Associated gains	200%	188.3%	376.6%

(B) 350 RPM for a 2200 turn coil

	Volts	**mA**	**mW**
(a) Conventional method:	0.93	32.4	30.1
(b) Subject invention method:	2.94	70.1	206.1
(c) Associated gains	316.1%	216.4%	684%

(C) 350 RPM for a 5500 turn coil

	Volts	**mA**	**mW**
(a) Conventional method:	2.09	17.3	36.2
(b) Subject invention method:	6.11	37.9	231.6
(c) Associated gains	292.3%	219.1%	640%

(D) 1200 RPM for an 1100 turn coil

	Volts	**mA**	**mW**
(a) Conventional method:	1.45	60.2	87.3
(b) Subject invention method:	2.95	141	416
(c) Associated gains	203.4%	234.2%	476%

(E) 1200 RPM for a 2200 turn coil

	Volts	**mA**	**mW**
(a) Conventional method:	3.225	36.2	116.75
(b) Subject invention method:	7.53	73.5	553.5
(c) Associated gains	233.5%	203%	474%

(F) 1200 RPM on a 5500 turn coil

	Volts	**mA**	**mW**
(a) Conventional method:	4.81	17	81.77
(b) Subject invention method:	11.23	31.4	352.6
(c) Associated gains	235.5%	184.7%	431.3%

(G) 1300 RPM on an 1100 turn coil

	Volts	**mA**	**mW**
(a) Conventional method:	1.6	83	132.8
(b) Subject invention method:	4.59	157	704.9
(c) Associated gains	280.6%	189.2%	530.8%

(H) 1300 RPM on a 2200 turn coil

	Volts	**mA**	**mW**
(a) Conventional method:	2.75	50.5	138.9
(b) Subject invention method:	7.74	88.5	685
(c) Associated gains	281.5%	175.2%	493.3%

(I) 1300 RPM on a 5500 turn coil

	Volts	**mA**	**mW**
(a) Conventional method:	5.061	17.3	87.56
(b) Subject invention method:	12.76	36.4	464.5
(c) Associated gains	252%	210%	530%

The following readings are taken from a coil with 24 gauge wire, 0.5" centre/core of steel and 2300T.

(A) 400 rpm

	Volts	**mA**	**mW**
(a) Conventional method:	0.15	3.7	0.56
(b) Subject invention method:	2.45	26.2	64.2
(c) Associated gains	1,633%	708%	11,563%

(B) 1200 rpm

	Volts	**mA**	**mW**
(a) Conventional method:	0.37	2.7	1
(b) Subject invention method:	4.1	10.3	42.2
(c) Associated gains	1,108%	381%	4,227%

(C) 1400 rpm

	Volts	**mA**	**mW**
(a) Conventional method:	0.58	2.4	1.39
(b) Subject invention method:	8.31	7.8	64.82
(c) Associated gains	1,433%	325%	4,657%

The following readings are taken from a coil made with 24 gauge wire, 0.75" centre/core of copper, 2300T.

(A) 400 rpm

	Volts	**mA**	**mW**
(a) Conventional method:	0.23	4.2	0.97
(b) Subject invention method:	0.37	7.2	2.66
(c) Associated gains	137%	171%	235%

(B) 1200 rpm

	Volts	**mA**	**mW**
(a) Conventional method:	0.79	3.4	2.69
(b) Subject invention method:	1.43	6.9	9.87
(c) Associated gains	181%	203%	367%

(C) 1400 rpm

	Volts	**mA**	**mW**
(a) Conventional method:	0.79	3.2	2.53
(b) Subject invention method:	2.1	2.7	5.67
(c) Associated gains	266%	84%	224%

The following readings were taken from a coil made of 28 gauge wire, 0.5" centre/core of steel and 6000T.

(A) 400 rpm

	Volts	**mA**	**mW**
(a) Conventional method:	0.49	2	0.98
(b) Subject invention method:	5.48	13	71.24
(c) Associated gains	1,118%	65%	7,269%

(B) 1200 rpm

	Volts	**mA**	**mW**
(a) Conventional method:	1.25	1.5	1.88
(b) Subject invention method:	15.04	4.1	61.66
(c) Associated gains	1,203%	273%	3,289%

(C) 1400 rpm

	Volts	**mA**	**mW**
(a) Conventional method:	2.08	1.1	2.29
(b) Subject invention method:	18.76	2.5	46.9
(c) Associated gains	902%	227%	2,050%

The following readings were taken from a coil made of 28 gauge wire, 0.75" steel centre/core and 6000T.

(A) 400 rpm

	Volts	**mA**	**mW**
(a) Conventional method:	0.64	1.7	1.09
(b) Subject invention method:	7.97	7.4	58.98
(c) Associated gains	1,245%	435%	5,421%

(B) 1200 rpm

	Volts	**mA**	**mW**
(a) Conventional method:	2.08	1.3	2.7
(b) Subject invention method:	20.4	5.6	114.24
(c) Associated gains	981%	431%	4,225%

(C) 1400 rpm

	Volts	**mA**	**mW**
(a) Conventional method:	2.28	1.2	2.74
(b) Subject invention method:	28.4	2.1	88.04
(c) Associated gains	1,246%	175%	2,180%

The extrapolated voltages for the items immediately above at the 1800 RPM speed for the method of the subject invention are as follows:

(A) 400-1400 RPM, 0.5" core, 2300T:
(1) 11.025v
(2) 6.15v
(3) 10.68v

(B) 400-1400 RPM, 0.75" core, 2300T:
(1) 1.665v
(2) 2.145v
(3) 2.7v

(C) 400-1400 RPM, 0.5" core, 6000T:
(1) 24.66v
(2) 22.56v
(3)24.12

(D) 400-1400 RPM, 0.75" core, 6000T:
(1) 10.25v
(2) 30.6v
(3) 36.51v

Some of the readings above do not seem consistent with others. This is attributed to the possibility that the wire connections may have been faulty or the proximity of the magnet relative to the core or coil may not have been the same. This was not taken into account at the time the tests were done.

The following figures are derived based on the premise that the subject invention has characteristics of a transformer when the number of turns on the coils change. In nearly all these situations, the subject invention acts exactly like a transformer, while the conventional way of producing electricity does not.

CM = conventional method;
SI = subject invention;

350 RPM		1100 to 2200 Turns	1100 to 5500 Turns	2200 to 5500 Turns
CM:	expected voltage:	1.14 volts	2.85 volts	2.325 volts
	actual voltage:	0.93 volts	2.09 volts	2.09 volts
	expected current:	28.3 mA	11.32 mA	12.96 mA
	actual current:	32.4 mA	17.3 mA	17.3 mA
	expected power:	32.3 mW	32.3 mW	30.1 mW
	actual power:	30.1 mW	36.2 mW	36.2 mW
	expected voltage gain:	2	5	2.5
	actual voltage gain:	1.636	3.667	2.247
	expected current gain:	0.5	0.2	0.4
	actual current gain:	0.572	0.306	0.534
	expected power gain:	1	1	1
	actual power gain:	0.932	1.12	1.203
SI:	expected voltage:	2.28 volts	5.70 volts	7.35 volts
	actual voltage:	2.94 volts	6.11 volts	6.11 volts
	expected current:	53.30 mA	42.64 mA	28.04 mA
	actual current:	70.10 mA	37.90 mA	37.90 mA
	expected power:	121.74 mW	243.05 mW	206.09 mW
	actual power:	206.10 mW	231.60 mW	231.60 mW
	expected voltage gain:	2	5	2.5
	actual voltage gain:	2.579	5.36	2.078
	expected current gain:	0.5	0.2	0.4
	actual current gain:	0.658	0.356	0.5407
	expected power gain:	1	1	1
	actual power gain:	1.696	1.906	1.124

1200 RPM		1100 to 2200 Turns	1100 to 5500 Turns	2200 to 5500 Turns
CM:	expected voltage:	2.90 volts	7.25 volts	8.06 volts
	actual voltage:	3.225 volts	4.81 volts	4.81 volts
	expected current:	30.10 mA	12.04 mA	14.48 mA
	actual current:	36.2 mA	17.0 mA	17.0 mA
	expected power:	87.29 mW	87.29 mW	116.71 mW
	expected voltage gain:	2	5	2.5
	actual voltage gain:	2.22	3.32	1.49
	expected current gain:	0.5	0.2	0.4
	actual current gain:	0.6	0.28	0.47
	expected power gain:	1	1	1
	actual power gain:	1.34	0.94	0.70
SI:	expected voltage:	5.9 volts	14.75 volts	18.83 volts
	actual voltage:	7.53 volts	11.23 volts	11.23 volts
	expected current:	70.50 mA	28.20 mA	29.40 mA
	actual current:	73.50 mA	31.40 mA	31.40 mA
	expected power:	415.95 mW	415.95 mW	553.60 mW
	actual power:	553.50 mW	352.60 mW	352.60 mW
	expected voltage gain:	2	5	2.5
	actual voltage gain:	2.55	3.81	1.49
	expected current gain:	0.5	0.2	0.4
	actual current gain:	0.52	0.22	0.43
	expected power gain:	1	1	1
	actual power gain:	1.33	0.85	0.64

1300 RPM		1100 to 2200 Turns	1100 to 5500 Turns	2200 to 5500 Turns
CM:	expected voltage:	3.20 volts	8.00 volts	6.88 volts
	actual voltage:	2.75 volts	5.06 volts	5.06 volts
	expected current:	41.50 mA	16.60 mA	20.20 mA
	actual current:	50.50 mA	17.3 mA	17.3 mA
	expected power:	132.8 mW	132.8 mW	138.98 mW
	actual power:	138.9 mW	87.56 mW	87.56 mW
	expected voltage gain:	2	5	2.5
	actual voltage gain:	1.72	3.16	1.84
	expected current gain:	0.5	0.2	0.4
	actual current gain:	0.61	0.21	0.34
	expected power gain:	1	1	1
	actual power gain:	1.05	0.66	0.63
SI:	expected voltage:	9.18 volts	22.95 volts	19.35 volts
	actual voltage:	7.74 volts	12.76 volts	12.76 volts
	expected current:	78.50 mA	31.40 mA	35.40 mA
	actual current:	88.50 mA	36.40 mA	36.40 mA
	expected power:	720.63 mW	720.63 mW	685.0 mW
	actual power:	685.0 mW	464.50 mW	464.50 mW
	expected voltage gain:	2	5	2.5
	actual voltage gain:	1.69	2.78	1.65
	expected current gain:	0.5	0.2	0.4
	actual current gain:	0.56	0.23	0.41
	expected power gain:	1	1	1
	actual power gain:	0.95	0.64	0.68

The following data represents the expected and actual voltage readings for the conventional method of producing voltage and the method of the subject invention. In virtually all circumstances, the herein invention produced more voltage than the conventional method and has gains that are higher than anticipated.

1100 Turns		350 to 1200 RPM	350 to 1300 RPM	1200 to 1399 RPM
CM:	expected voltage:	1.954 volts	2.117 volts	1.571 volts
	actual voltage:	1.45 volts	1.60 volts	1.60 volts
	expected voltage gain:	3.429	3.714	1.083
	actual voltage gain:	2.544	2.807	1.103
SI:	expected voltage:	3.909 volts	4.234 volts	3.196 volts
	actual voltage:	2.95 volts	4.59 volts	4.59 volts
	expected voltage gain:	3.429	3.714	1.083
	actual voltage gain:	2.579	4.026	1.556

2200 Turns		350 to 1200 RPM	350 to 1300 RPM	1200 to 1399 RPM
CM:	expected voltage:	3.189 volts	3.454 volts	3.494 volts
	actual voltage:	3.225 volts	5.061 volts	5.061 volts
	expected voltage gain:	3.429	3.714	1.083
	actual voltage gain:	3.468	2.957	0.853
SI:	expected voltage:	10.081 volts	10.919 volts	8.157 volts
	actual voltage:	7.53 volts	7.74 volts	7.74 volts
	expected voltage gain:	3.429	3.714	1.083
	actual voltage gain:	2.561	2.633	1.028

5500 Turns		350 to 1200 RPM	350 to 1300 RPM	1200 to 1399 RPM
CM:	expected voltage:	7.167 volts	7.62 volts	5.211 volts
	actual voltage:	4.81 volts	5.061 volts	5.061 volts
	expected voltage gain:	3.429	3.714	1.083
	actual voltage gain:	2.301	2.422	1.052
SI:	expected voltage:	20.951 volts	22.693 volts	12.166 volts
	actual voltage:	11.23 volts	12.76 volts	12.76 volts
	expected voltage gain:	3.429	3.714	1.083
	actual voltage gain:	1.838	2.088	1.049

2300 Turns	(0.5” core 24 gauge wire)	400 to 1200 RPM	400 to 1400 RPM	1200 to 1400 RPM
CM:	expected voltage:	0.45 volts	0.525 volts	0.432 volts
	actual voltage:	0.37 volts	0.58 volts	0.58 volts
	expected voltage gain:	3.00	3.50	1.167
	actual voltage gain:	2.467	3.867	1.568
SI:	expected voltage:	7.35 volts	8.57 volts	4.785 volts
	actual voltage:	4.10 volts	8.31 volts	8.31 volts
	expected voltage gain:	3.00	3.50	1.167
	actual voltage gain:	1.673	3.392	2.027

2300 Turns	(0.75” core 24 gauge wire)	400 to 1200 RPM	400 to 1400 RPM	1200 to 1400 RPM
CM:	expected voltage:	0.69 volts	0.805 volts	0.922 volts
	actual voltage:	0.79 volts	0.79 volts	0.79 volts
	expected voltage gain:	3.00	3.50	1.167
	actual voltage gain:	3.435	3.435	1.00
SI:	expected voltage:	1.11 volts	1.295 volts	1.688 volts
	actual voltage:	1.43 volts	2.10 volts	2.10 volts
	expected voltage gain:	3.00	3.50	1.167
	actual voltage gain:	3.865	5.676	1.469

6000 Turns	(0.5” core 28 gauge wire)	400 to 1200 RPM	400 to 1400 RPM	1200 to 1400 RPM
CM:	expected voltage:	1.47 volts	1.715 volts	1.459 volts
	actual voltage:	1.25 volts	2.08 volts	2.08 volts
	expected voltage gain:	3.00	3.50	1.167
	actual voltage gain:	2.551	4.245	1.664
SI:	expected voltage:	16.44 volts	19.18 volts	17.668 volts
	actual voltage:	15.04 volts	18.76 volts	18.76 volts
	expected voltage gain:	3.00	3.50	1.167
	actual voltage gain:	2,745	3.423	11.247

6000 Turns	(0.75” core 28 gauge wire)	400 to 1200 RPM	400 to 1400 RPM	1200 to 1400 RPM
CM:	expected voltage:	1.92 volts	2.24 volts	2.427 volts
	actual voltage:	2.08 volts	2.28 volts	2.28 volts
	expected voltage gain:	3.00	3.50	1.167
	actual voltage gain:	3.25	3.563	2.427
SI:	expected voltage:	23.91 volts	27.895 volts	23.80 volts
	actual voltage:	20.40 volts	28.40 volts	28.40 volts
	expected voltage gain:	3.00	3.50	1.167
	actual voltage gain:	2.56	3.563	1.392

CLAIMS

1. A generator for providing alternating electrical current comprising:

(a) an independently supported rotating drive shaft;

(b) a plurality of spaced apart magnets extending outwardly from the shaft, the magnets each creating magnetic flux and having a polar end with a particular north or south polarity, said magnets being circumferentially spaced and mounted around the shaft, such that the polar ends of the magnets extend away from and circumferentially around the shaft;

(c) a plurality of stationary coil elements, each said coil element comprising electrical windings wound about substantially the entire coil element, each of said coil elements further comprising a solid metal core with two ends extending substantially through the coil element at the centre of the coil element, each element being positioned such that one end of each of the cores is located in spaced, adjacent relation to the magnets, whereby rotation of the shaft causes rotation of the magnets around the shaft and in spaced, adjacent relation to the cores of the coil elements, the magnetic flux of the magnetics cutting the cores of the coil elements, creating alternating current in the coil elements; and

(d) a first housing in which some of the plurality of coil elements are mounted and a second housing in which the remainder of the plurality of coil elements are mounted.

2. The generator as in claim 1 wherein the magnets are spaced 90° apart around the shaft.

3. The generator as in claim 1 wherein magnets with north polar ends alternate with the magnets with south polar ends in spaced, circumferential relation around the shaft.

4. The generator as in claim 1 wherein all the plurality of magnets are magnets with the same polar ends.

5. The generator as in claim 1 wherein the magnets are equidistantly spaced around the shaft.

6. The generator as in claim 1 wherein the plurality of magnets is rotated by the drive shaft between and in spaced apart relation with the housings.

7. The generator as in claim 1 further comprising four magnets extending from the shaft, adjacent magnets being positioned perpendicular to each other, each magnet having either an outwardly extending north or south polar end, and said magnets being positioned such that a north polar end magnet follows a south polar end magnet, in spaced, circumferential relation around the shaft.

8. The generator as in claim 1 further comprising multiple north polar end magnets and multiple south polar end magnets extending from the shaft, said magnets being positioned in spaced, circumferentially relation around the shaft.

9. The generator as in claim 1 in which the shaft is positioned within a rotor and the magnets are circumferentially mounted on the rotor.

10. The generator as in claim 1 in which the shaft is connected to power means for rotating the shaft, whereby upon rotation of the shaft, the magnets are rotated around the shaft in spaced relation to the cores of the coil elements, thereby inducing an alternating electrical field along the length of each of the cores, thereby producing an alternating electric current in the windings of the coil elements.

11. The generator as in claim 10 further comprising means to transmit the alternating electrical current for electrical power usage.

GEOFFREY SPENCE: ENERGY CONVERSION SYSTEM

US Patent 4,772,816 **20th September 1988** **Inventor: Geoffrey M. Spence**

ENERGY CONVERSION SYSTEM

This is a slightly reworded excerpt from this patent which has a substantial electrical output capable of providing it's own electrical input to be self-powering as well as generating kilowatts of excess power. The highly-respected Dr. Harold Aspden comments:

"In my Energy Science Report No. 8I, I also mentioned the apparatus designed by Geoffrey Spence, an inventor based in U.K. This is the subject of his U.S. Patent No. 4,772,816. Electrons injected into a chamber formed between two concentric electrodes are deflected into the inner electrode by a pair of magnets that provide a magnetic field along the central axis of the concentric electrodes. Of itself, this should add no excess energy, because the energy fed into accelerating the electrons is merely absorbed by electrostatic repulsion in charging the central electrode and so the capacitor. However, if that electron flow pulsates and there are connections to draw electron current from that central electrode then the pulsation implies a recurring sequence of charge and discharge. That 'magic capacitor' function is then harnessed.

The questions then are whether the Spence invention really works and whether it is commercially viable? Well, I wrote that Energy Science Report back in 1996, six years ago, and it is only a few months ago that I heard any more of that project. Geoffrey Spence has developed the prototype product to the stage where he has closed the loop in the sense that a portion of the output power was fed back to impart the energy needed to sustain the electron beams. He has a self-sustaining unit that can deliver kilowatts of useful electrical power with no visible energy input."

ABSTRACT

The apparatus uses a magnetic field (**80**) to accelerate a charged particle radially towards a target electrode (**10**). The increased kinetic energy of the particles enables the particle to give up more electrical energy to the target electrode (**10**) than was initially given to it. This charges the target electrode (**10**), and the increased energy is extracted from the apparatus by connecting an electrical load between the target electrode and a point of lower or higher potential.

US Patent References:

1717413	Jun, 1929	Rudenberg	310/306.
3202844	Aug, 1965	Hatch	310/306.
3234411	Feb, 1966	Klein	310/306.
3312840	Apr, 1967	Gabor	310/306.
3393330	Jul, 1968	Vary	310/306.
3899696	Aug, 1975	Shimadu	310/306.

DESCRIPTION

This invention relates to a process and apparatus for generating a potential difference between two or more electrodes and using charged particles as energy carriers.

Electrical power is usually generated by burning a fossil fuel and converting the energy released into rotary motion which drives electrical generators. This is cost-effective only if carried out on a large scale, the conversion process being inefficient; utilising natural resources, and producing waste products which can cause serious environmental pollution. An additional disadvantage is that the electrical power cannot be supplied directly to road vehicles or ships.

The energy-conversion process of this invention involves no health or pollution hazard and generates electrical power directly by a single-stage process without waste products. The overall energy-conversion factor and power-to-weight ratio are both high, making the apparatus suitable for most fixed and mobile applications.

One known apparatus for doing useful work by operating on electrons with a magnetic field is called the "betatron". This includes a doughnut-shaped vacuum chamber between the poles of a specially-shaped electromagnet. Thermionically-produced electrons are injected into the chamber with an initial electrostatic energy of about 50 keV. As the magnetic field builds up during its positive-going half-cycle, it induces an electromotive force within the doughnut, which force accelerates the electrons and forces them to move in an curved path, by interaction with the magnetic field. An important distinction between the betatron and the energy converter of this invention is that in the former the magnetic field has got to be able to increase over a very short period, in order to accelerate the electrons sufficiently, whereas in the latter the magnetic field is virtually constant and the electrons fall inwardly to give up both their kinetic energy and electric charge to a central electrode.

The present invention aims at providing an energy converter which may be mobile and which has a permanent magnet or an energised source of magnetic radiation associated with it in order to amplify the electrical energy initially imparted to charge particles fed to, or produced in, a so-called "vacuum" chamber forming part of the generator, which increased energy is extracted from the target electrode on which the particles are incident.

Accordingly the present invention provides an energy converter as per the appended claims.

While the invention is not to be limited to any particular theory of operation, it is based on the fact that, when a charged particle is constrained to move through a radial distance d (irrespective of the path which it actually follows) through a magnetic field of intensity **H**, the work done on the particle is **H** x **d**. For an electron carrying a charge **e**, and moving at a speed **v** over distance **d**, the total force on the electron is the centripetal force the sum of **H** x **e** x **v**, less the force exerted on the electron in the opposite direction by the centrifugal force, which is the sum of ($\mathbf{m} \times \mathbf{v}^2$)/**r**. By making the radius of the centre electrode appreciably greater than the orbit of equilibrium, the centrifugal force can be minimised, thus maximising the centripetal force, and hence the work done in bringing the charge to the electrode.

The process by which the converter of this invention works uses, as a source of charge, electrically-charged particles, for example electrons and/or ions. Two or more electrodes are housed in a low-pressure chamber. A magnetic field as specified below traverses the chamber: it emanates from a permanent magnet, electromagnet or a source of magnetic radiation. An external source of energy is used to give the charge particles initial kinetic energy, for example by heating, acceleration through an electric field, or from nuclear radiation. The energy-conversion process uses the magnetic field to transfer the charged particles along a desired orbit until they impinge on a central electrode (cathode). The work done on the particles (therefore the electrical potential attained by the cathode) is proportional to the resultant magnetic force times the distance over which the force acts. As the particles move within the chamber they cross the magnetic field. This produces a force acting on the particles, the force being proportional to the field strength, speed and electrical charge of the particles, and the sine of the angle of incidence between the path of the particle and the magnetic lines of force. This force has an angular component and a centripetal one, which forces the particles to travel along a spiral orbit.

An opposing centrifugal force also acts on the particles in opposition to the centripetal magnetic force. The electrode potential is proportional to the work required to be done on the charged particles to overcome both the centrifugal force and the electric field around the cathode as the charges accumulate and the potential difference between the electrodes increases. Maximum electrode potential is reached when the centrifugal and repulsive forces are equal to the centripetal force, after which no further charged particles reach the electrode. The radius of the electrode determines the minimal value voltage between the central and an outer electrode: as the central electrode radius is reduced (by sputtering or erosion) the centrifugal force increases, reducing the number of charged particles which can reach the central electrode and therefore the electrode potential, for a given field strength and particle speed. The difference in mass between ions and lighter charged particles, such as electrons, results in different centrifugal forces for given particle kinetic energies. The generator output and efficiency are optimised when the generator uses the maximum magnetic field to minimise the centrifugal force and to maximise the radial distance over which the force acts for a given field strength. Particles having the highest charge-to-mass ratio should be used.

Low pressure gases can be used as a charge source when ionised by particle collision and excitation within the chamber. Doped gases can minimise the energy level for ionising gas atoms/molecules thereby improving efficiency. However, the resultant magnetic force is lower for the heavier ions due to their lower velocity so that the electric field radiated by the high voltage electrode (cathode) can attract oppositely charged particles (+ ions) and subsequently discharge the electrode reducing the output voltage. Various methods can be used to overcome or reduce this effect. For example one method would be to separate the opposite charges and/or to use electrical biased grids to control the flow of opposite charges to the high voltage electrode.

Gaseous systems are generally more complex than single charge systems, providing higher currents at lower voltages, whereas single charge systems, for example electrons used in high vacuum chambers, can generate higher voltages.

The magnetic field can be from one or more permanent magnets and/or from one or more electromagnets; a static magnetic field produces a constant output voltage, while a varying field produces a varying voltage for particles with equal mass and velocity.

An external source is used to accelerate the charged particles to give them initial kinetic energy, which is released as heat when the particles collide with the electrode. When the energy represented by the increased voltage between the electrodes is greater than the energy required to provide the charged particles; and accelerate them, the conversion process is self-sustaining, the output energy being the difference between the sum of the kinetic energy lost and the energy generated. Charge flows from the central electrode via an external load to another electrode. The electrical energy (work) released is a function of the current (sum of charges that flow per second) times the potential difference. Electrical and thermal output can be controlled by varying: the field strength; the particle speed; the particle density (mean free path), and/or by incorporating a grid to control the rate at which particles reach the central electrode. The output is also proportional to the heat lost or gained, since the translational energy of the particle is proportional to its temperature. Heat liberated at the electrode can be returned to the particles to maintain their energy, or be utilised in a heat exchanger for external use. The generator normally uses non-reacting conductive material to prevent chemical reaction by gases, coolants etc. with the electrodes, container walls or other components. Various particle trajectories, directional movements and positioning of the orbiting particles can be used with appropriate magnetic fields. The low-pressure gas can be ionised by any suitable means: one method would be to use an electron/ion gun where the plane and direction of the injected particles is correct for the applied magnetic field. In gas apparatus, the electrons flowing through the external circuit, on reaching the anode, recombine with a gaseous ion to form a neutral gas atom/molecule. This atomic particle is duly re-ionised by collision and/or the electric fields, the energy being directly or indirectly derived from the work done by the resultant force acting on the charged particles.

In order that the invention may be better understood, it will now be described with reference to the accompanying schematic drawings, which are given by way of example, and in which:

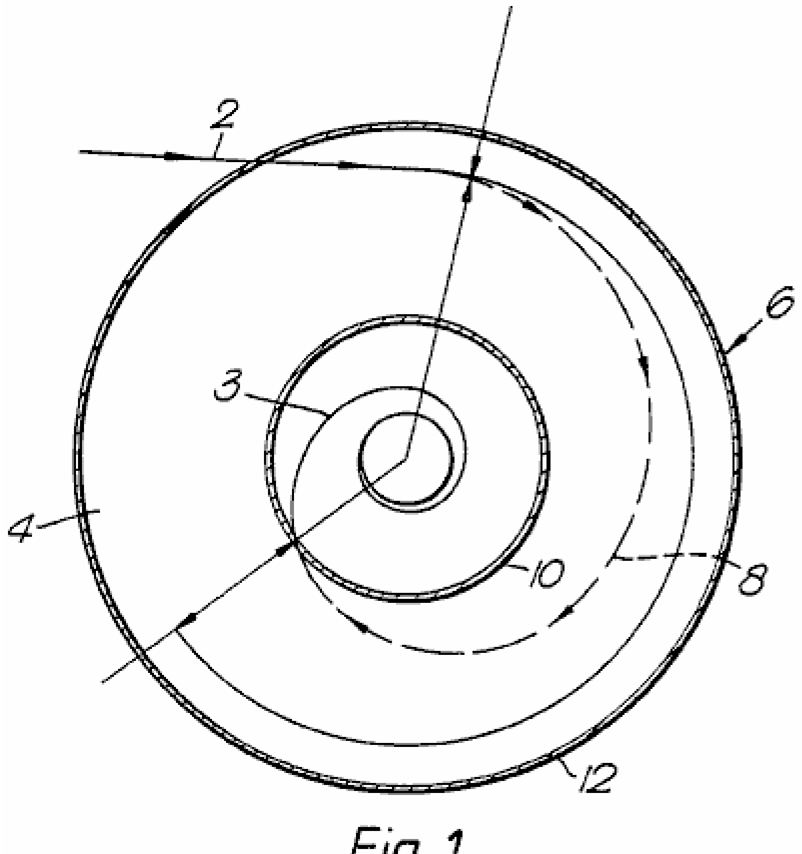

Fig.1.

Fig.1 shows schematically a cross-section of the generator; and the path followed by a particle during the energy-conversion process;

Fig.2.

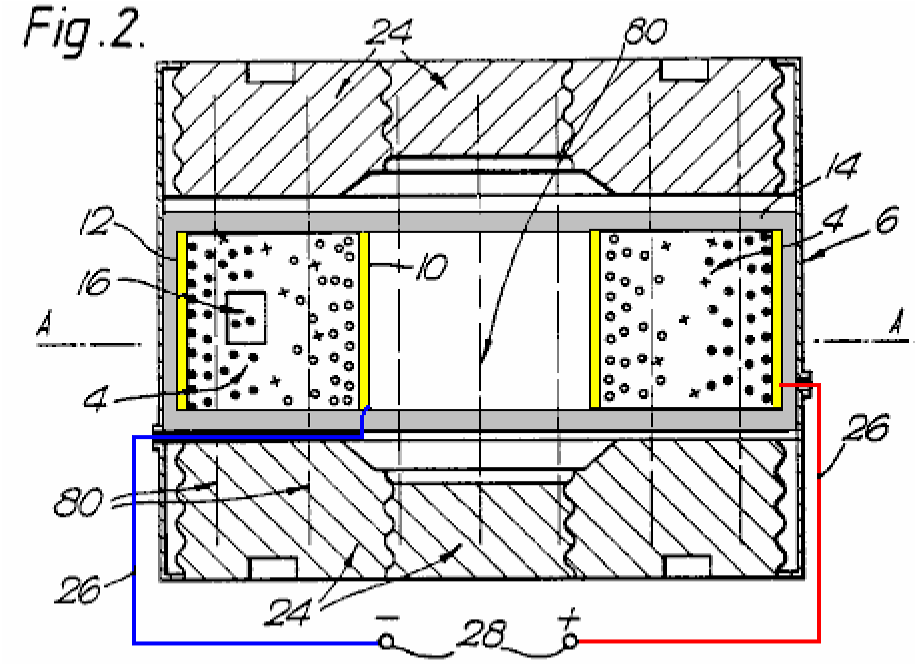

Fig.2 shows an axial cross-section of one type of apparatus for the invention, using permanent magnets; and a grid controlling ion migration to the cathode.

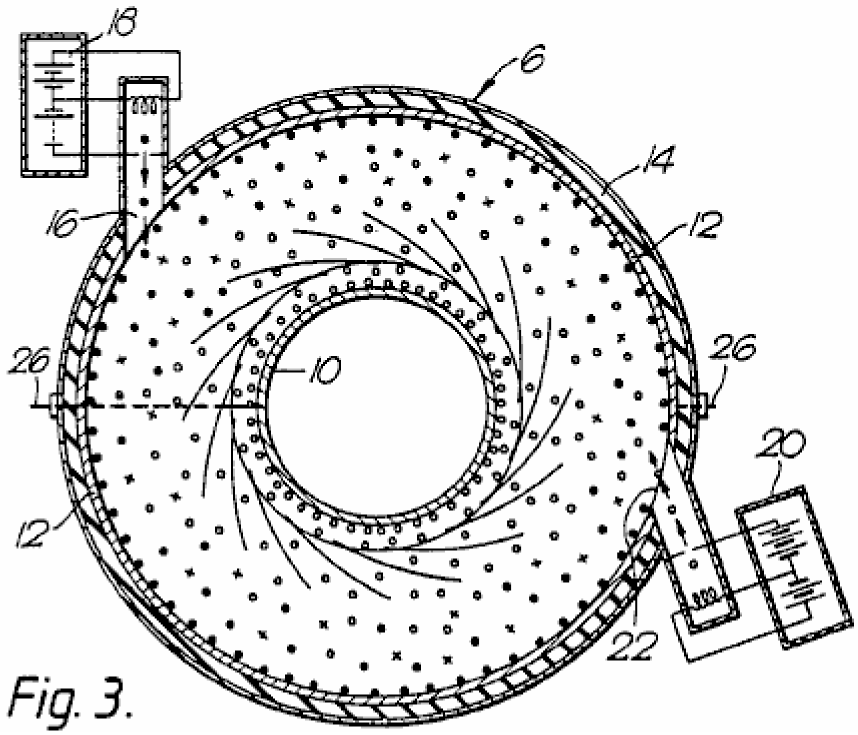

Fig. 3.

Fig.3 shows a cross-section of the apparatus of **Fig.2** along the line **A--A**;

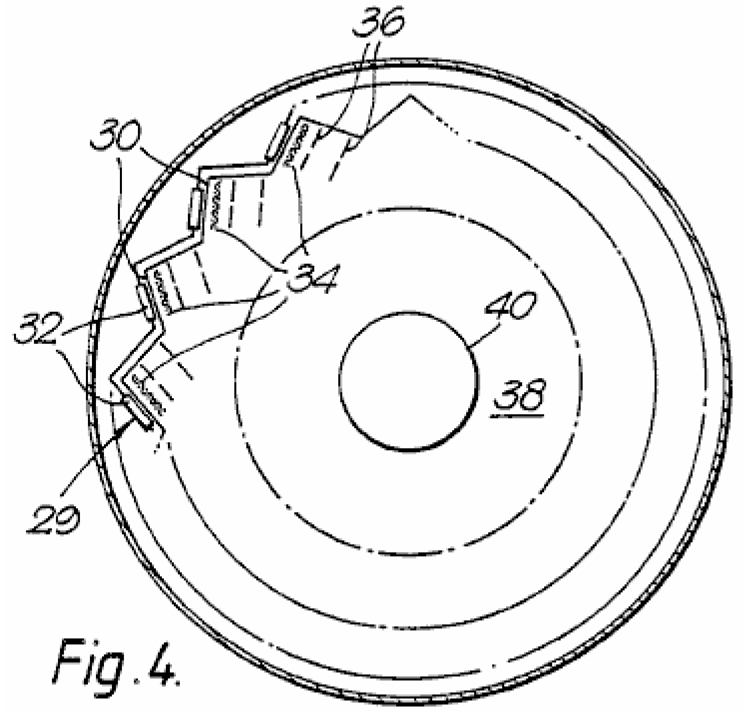

Fig.4.

Fig.4 is a diagrammatic section through one form of converter using electrons, showing a circular series of electron sources;

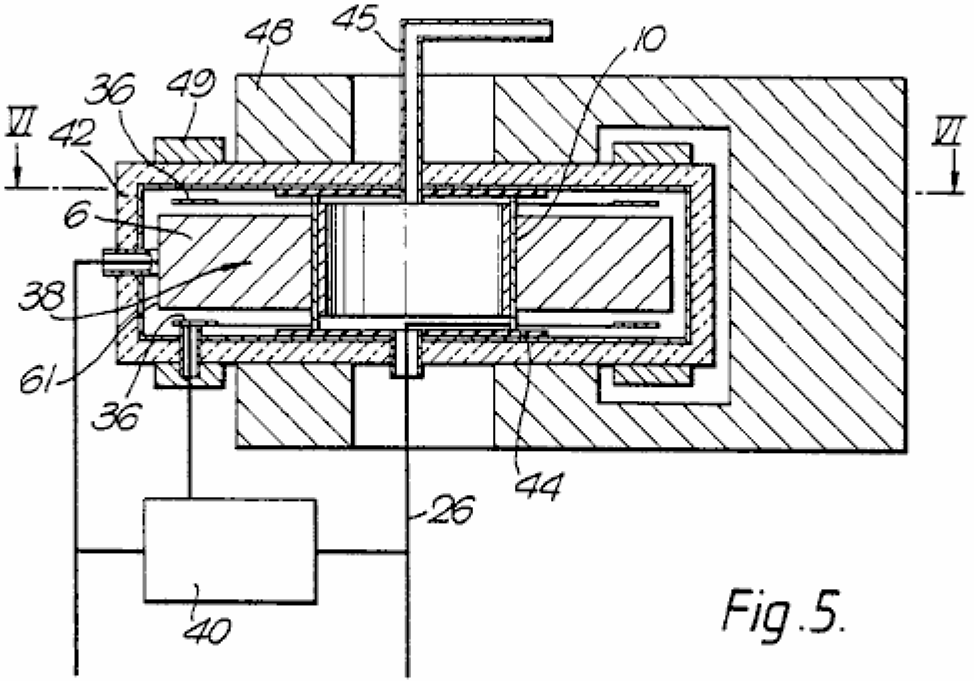

Fig.5.

Fig.5 is an axial cross-section through a more practical embodiment of the **Fig.4** converter;

Fig.6.

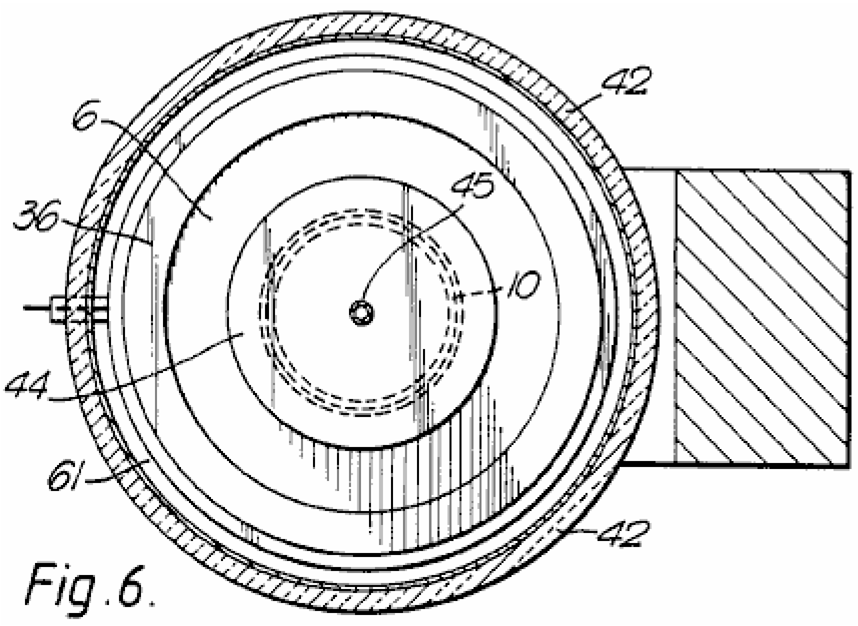

Fig.6 is a section along the line **VI--VI** of **Fig.5**;

Fig.7.

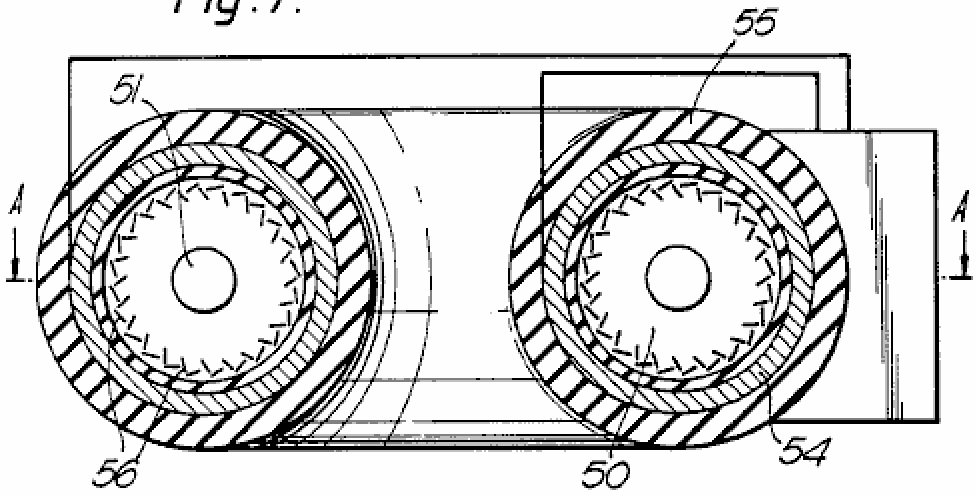

Fig.7 is a cross-section along a diameter of a doughnut-shaped (toroidal) high-power converter;

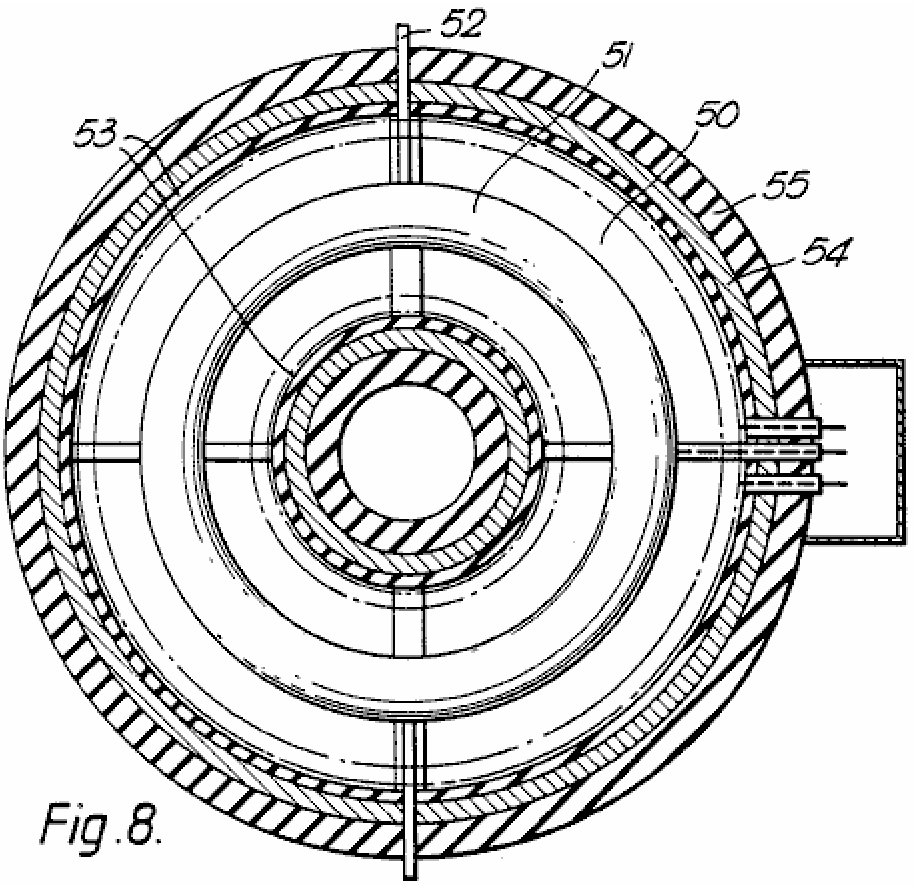

Fig.8 is a section on line **A--A** of **Fig.7**, and

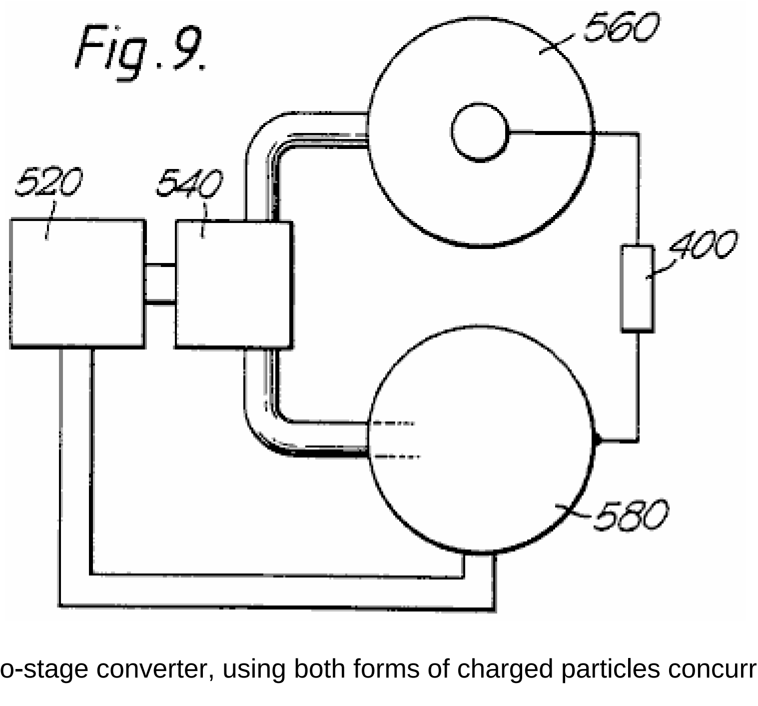

Fig.9 is a scheme of a two-stage converter, using both forms of charged particles concurrently.

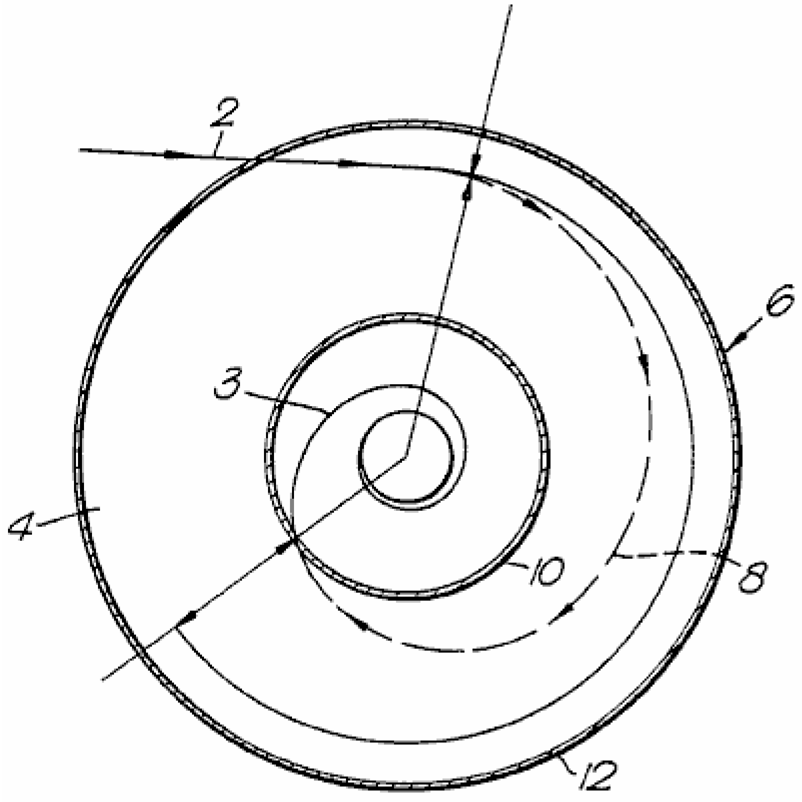

Fig.1.

As shown in **Fig.1**, a charged particle is injected along a trajectory **2** into a magnetic field extending normal to the plane of the drawing. The field permeates the space **4** of the annular cross-section within a cylindrical chamber **6**. The magnetic field produces a force on the particle, extending at right angles to both it's direction of motion and the magnetic field. The resultant centripetal force causes the particle to follow a spiral path **8** ending on the central electrode **10** spaced radially inwards from the outer cylindrical electrode **12**. The extra energy acquired by the particle is a function of the radial distance travelled and the strength of the magnetic field between the electrodes. This energy is given up on impact with the central electrode, in the form of heat and/or work done in bringing the charge against the opposing electric field to the electrode. In the absence of the central electrode **10**, the electrons would follow the orbit of equilibrium **3**, this being the orbit followed by a particle when the centrifugal and centripetal forces balance, resulting in no work being done on the particle.

Fig.2.

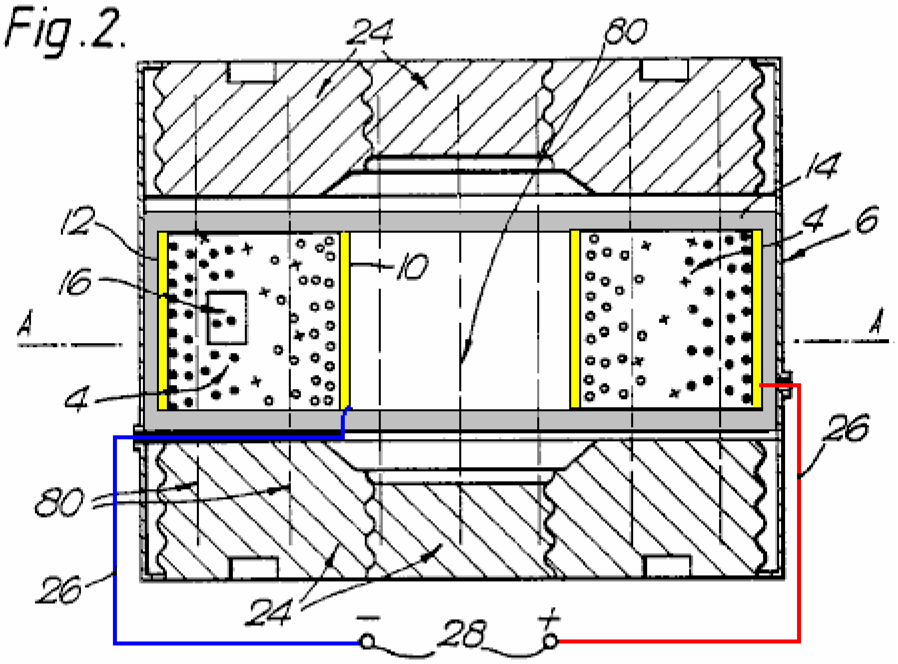

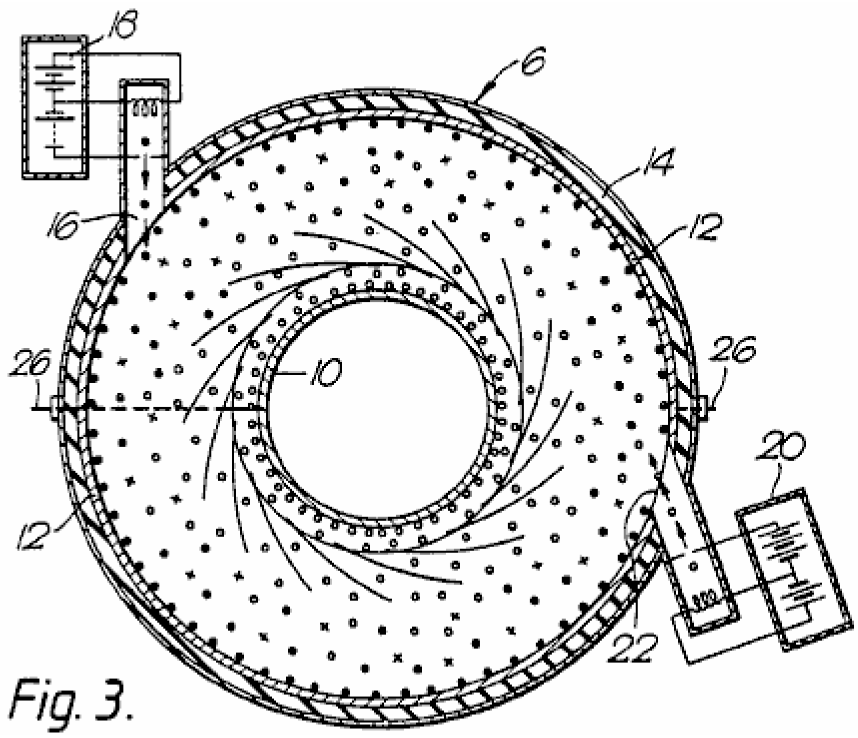

Fig. 3.

As shown more particularly in **Fig.2** and **Fig.3**, the energy converter **1** consists basically of a annular chamber **6** having an outer cylindrical electrode **12**; an inner cylindrical electrode **10**, and two gas-tight walls **14** of electrical insulation material. In the electrode **12** is a port **22** through which an electron gun **20** can inject electrons into space **4**. Additionally or alternatively, an ion gun **18** can inject positively-charged particles through port **16**.

Seated on the major flat surfaces of chamber **6** are magnetic pole-pieces **24** giving rise to a uniform magnetic field **80** which traverses the space **4** parallel with the axis of chamber **6**. The magnets may be ceramic permanent magnets, or they may be electromagnets. In either case, means (not shown) may be provided for adjusting the magnetic field strength.

Heavy conductors **26** connect the two electrodes to terminals **28** across which a resistive load can be placed to dissipate the generator output.

A vacuum pump (not shown) has its inlet in communication with the interior of chamber **6** so that the gas pressure in the generator can be reduced to, and kept at, a desired sub-atmospheric value. Associated with the pump, or separate from it, may be means for ensuring that the gas in the generator is of a desired composition, for instance, one which enhances the possibility of ionising collisions between the charged particles and gas atoms or molecules. One such suitable gas would be neon containing 0.1% argon by volume.

In order to cause the generator to start working, it is necessary to start the vacuum pump and to energise the electron gun or each particle source. The latter involves heating a filament from an external source of power until the required internal energy level (temperature) is reached which in turn causes a piece of thermo-emissive material to emit electrons. If the electrons are to be the charge carriers, they are accelerated by a suitable electric field and projected into the space **4**. Here they are further accelerated by the radial electric field between the electrodes, and at the same time have a deflecting force applied to them by the axial magnetic field through which they pass.

For an ion source, the electrons are accelerated until they impact some atoms or molecules, to produce a stream of ions which likewise pass into the space **4**. With the polarities shown, the electrons are attracted to the central electrode, while the ions are pulled towards the outer electrode, which accounts for the different orientations of sources **18** and **20**.

Any gas molecules which pass close to, or between, the electrodes are ionised by collision and/or the electrostatic field. Output current can then be taken through a load impedance connected across terminals **28**. The impedance is matched to prevent the internal process energy dropping below a value which would prevent the re-ionisation of the gaseous atoms. As each ion is deionised at the anode, the gas atoms will tend to continue to circulate until re-ionised, the resultant force drawing both the ions (shown by solid circles) and electrons (shown by hollow circles) back into their respective orbits.

It is envisaged that, in the case of a converter using electrons, the chamber could be evacuated to a chosen sub-atmospheric pressure and sealed.

In that form of the invention shown in **Fig.4**, each electron source forming one of a circular series **29** of sources has a body **30** of electro-emissive material, such as molybdenum coated by caesium, heated by an electric filament **32** connected in series or parallel across a source of electric power (not shown). Immediately in front of each emitter **30** is a grid **34** of fine wires, all the grids being connected with a source of adjustable voltage so as to control the flow of electrons from the emitter. These electrons are projected through one or more acceleration electrodes **36** across which a potential difference is established along the electron path, so that each incremental electron source injects a stream of electrons having known kinetic energy into a space **38**, indicated by the circle shown in a broken line, traversed by the deflection magnetic field, within which is the central, target, electrode **40**. The stream of electrons injected into the magnetic field may be focused by electric and/or magnetic fields.

In the remaining Figs, those parts already referred to will retain the same references.

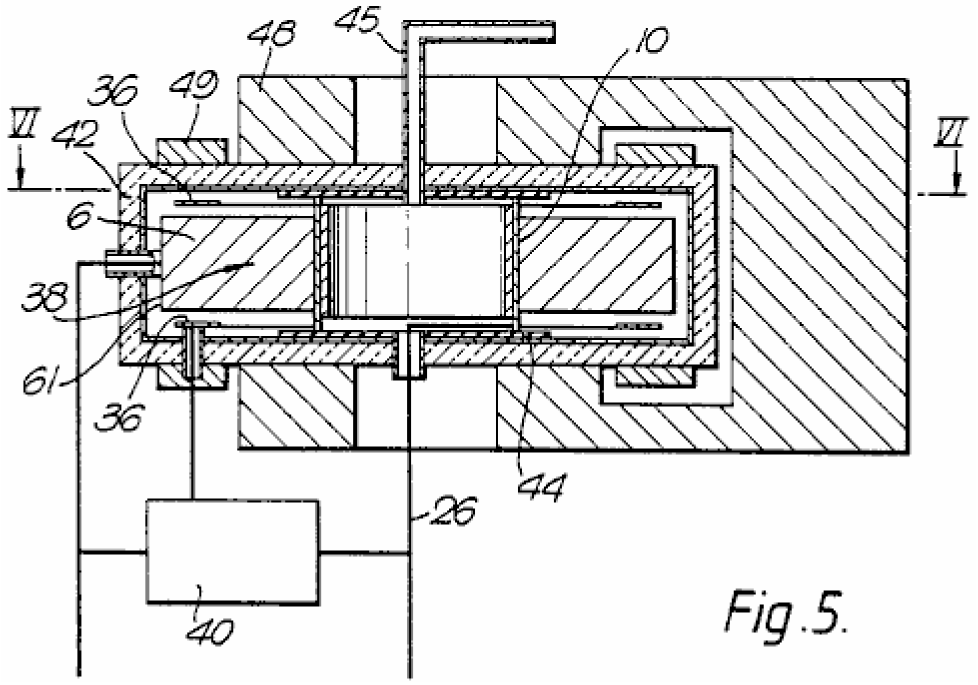

Fig.5.

In the "flat disc" configuration shown in **Fig.5**, the annular chamber **6** is enclosed in a body **42** of thermal insulation material. The central electrode **10** is seated on insulators **44** which are pierced by conduits **45** for the passage of a coolant fluid and by an output lead **26**, which may extend along the conduit so that it too is cooled.

Fig.5 shows how the deflection magnet is generally U-shaped, and has two annular pole-pieces **48**, so that the magnetic field is uniform between the surface of electrode **10** and the region **38** radially innermost of the circular electron source, the electric field between the electrode **36** and emission surface **61** providing the electrons initial accelerations (kinetic energy). **Fig.5** also shows how a voltage is tapped off the resistive load **40** (which thus functions as a potentiometer) and is fed through to the acceleration electrode **36**.

Chamber **6** is also provided with two annular magnets **49** (or a circular series of incremental magnets) designed to influence the direction along which the electrons pass into space **38**. The magnets provide local magnetic fields to ensure that the electrons meet the boundary of space **38** tangentially, i.e. with zero radial velocity.

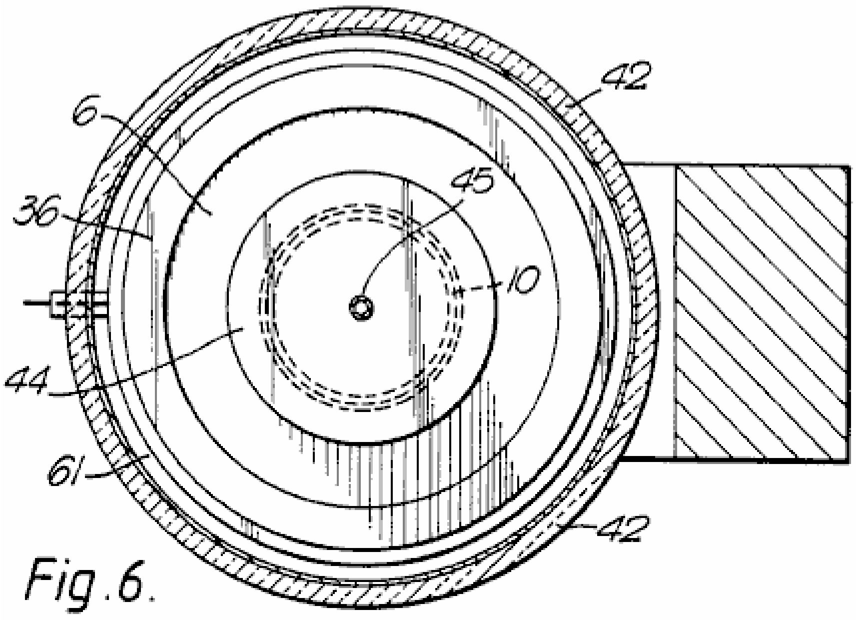

Fig. 6.

Fig. 7.

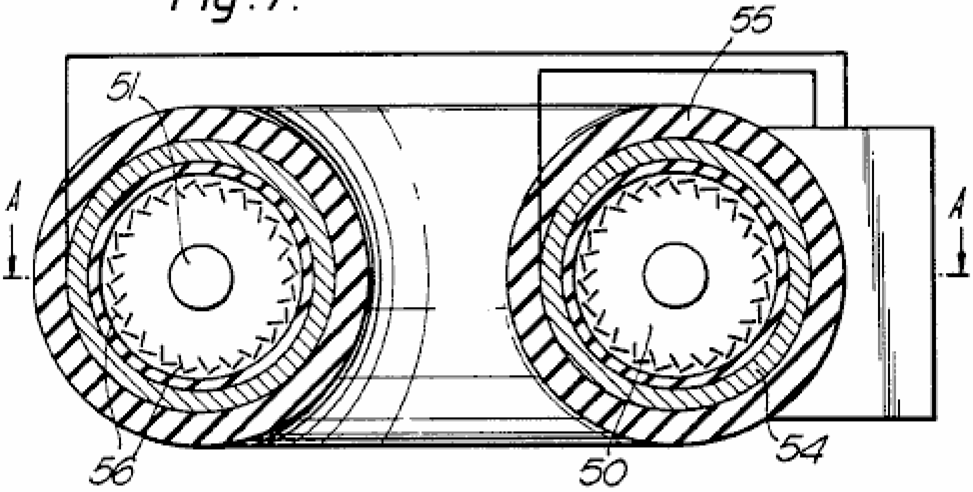

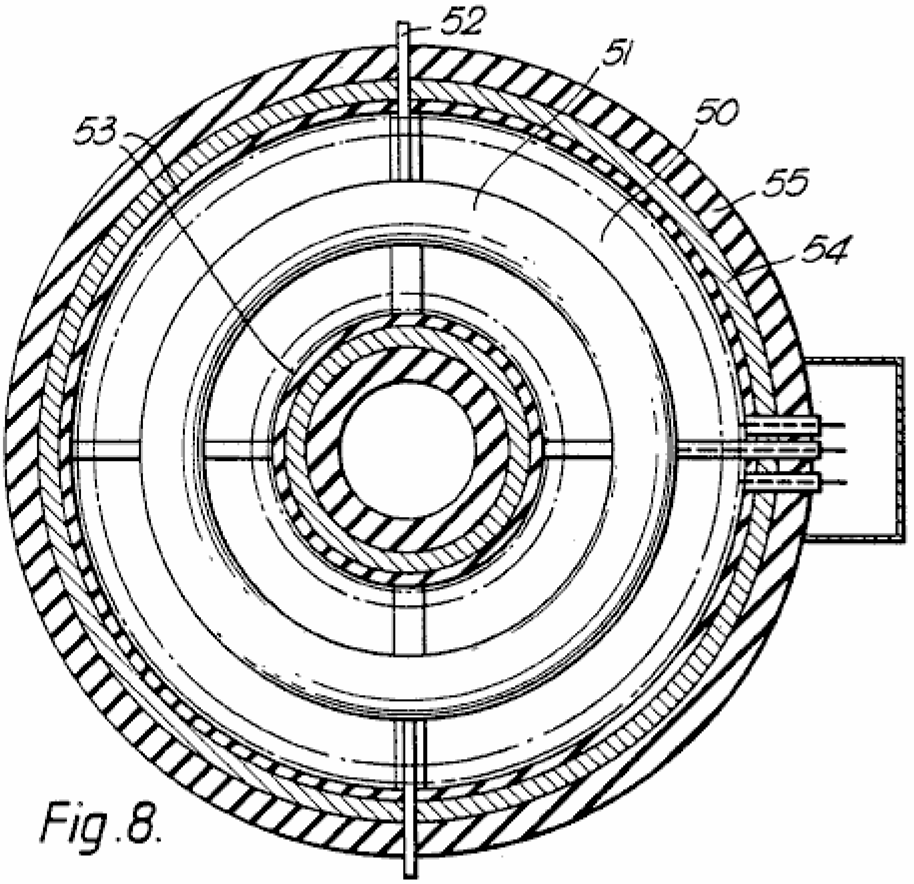

Fig.8.

In that form of the invention shown in **Fig.7** and **Fig.8**, the individual "flat disc" converters of **Fig.5** and **Fig.6** are arranged in a type of "circular" construction, such that the magnetic fields extend along the axis of the resulting toroidal space **50** penetrated by a single toroidal target electrode **51** through which a coolant fluid may pass, along conduits **52**. The cross-section of **Fig.8** shows that the magnetic fields are supplemented by an electric field produced by windings **53** wound on a magnetic core **54** bounded by insulation **55**.

Apart from the fact that the electrodes are common to all converters, each functions individually as described above. Obviously the power source driving the heaters for the electron guns **56**; the electromagnets (if any); the acceleration electrodes and the control grids, have to be of sufficient capacity to supply the greater power needed to drive this "toroidal" configuration. Some changes would need to be made to the physical dimensioning and positioning of the relatively-complex construction, but as all these are readily understood by a competent engineer, they are not further described in this specification.

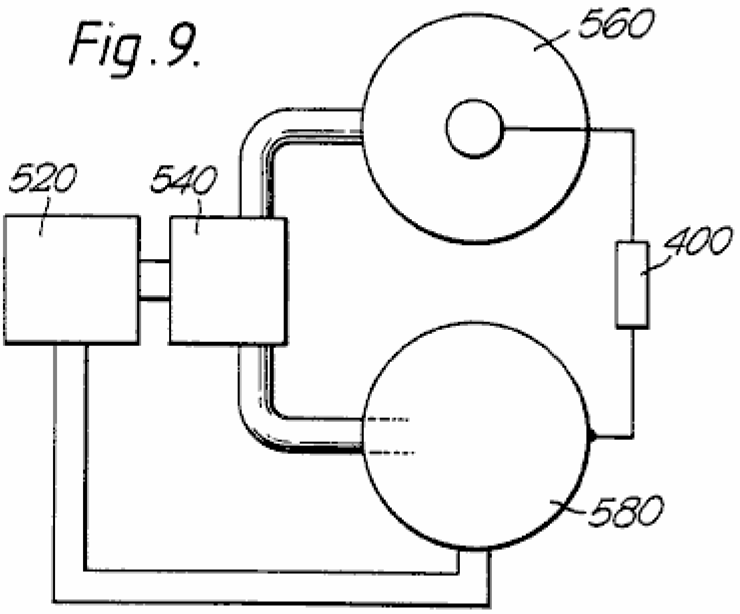

As already mentioned, the converters of this invention are of two types, i.e. electronic and ionic. **Fig.9** shows diagrammatically how they may be combined to take advantage of their differences. In the two-stage power generation apparatus shown in **Fig.9** the first stage consists of an ioniser **520** supplying a mixture of charged particles, i.e. ions and electrons, to a separator **540**, which supplies electrons to a second stage consisting of a sealed electronic converter **560** in parallel with a gaseous ionic converter **580**.

The separator **540** may use the different particle masses to separate them centrifugally using, for example, the energy conversion system of **Fig.1** (without the target electrode), or it may use electromagnetic deflection fields, or a physical diffusion process, either alone or in combination. As this is not part of the subject-matter of this invention, it will not be described herein in any further detail.

In the generators of **Fig.6** and **Fig.8**, the respective particles are deflected magnetically and accelerated radially, to function as already described above.

Because each generator is designed to operate most effectively with its particular form of charge carrier, it can be designed optimally, thus reducing the energy absorption caused by ions and electrons recombining before each has fallen on its respective target electrode. Because the electronic converter would finish up with a negatively-charged electrode, whereas the converse is true for the ionic converter, the load **400** extracting energy from the apparatus is connected across the two target electrodes. The other two electrodes of the converters may be held at the same potential, as by being connected together, or their potentials may float.

The generator can be designed to produce a wide range of output voltages and currents. The lower-energy generators are light enough to be mobile, so that they can power vehicles or act as stand-by generators. Various electrode and magnet configurations can be used, and the generators can be connected in series or parallel. Cooling jackets are fitted to prevent overheating in high-powered apparatus, and the generator is enclosed within a thermally-insulating jacket to reduce heat losses thereby increasing particle velocities. For high-energy generators, it may be necessary to provide for forced cooling of the inner electrode, as by fins projecting therefrom into a high-speed stream of suitable coolant.

Although the process according to this invention is particularly suited to using external electrical energy, it must be understood that other sources can be used to provide the initial energy input, e.g. solar and waste process heat are some of the varied energy sources which could be utilised. Control of the charge-generation process can be achieved by other means, including one or more electrically-biased grids, as used in thermionic valves.

CLAIMS

1. An energy conversion process for generating an electric potential, the process comprising; providing a source of electric charge carriers of predetermined polarity, accelerating the carriers away from the source, introducing the carriers into a magnetic field transverse to the path of the carriers in a process chamber, the field bounding an inner electrode within the chamber such that the carriers orbit the electrode while accelerating radially toward the electrode; and converting the resulting increased kinetic energy of the carriers

into an electric potential at the electrode before the carriers reach an orbit of equilibrium in which the centripetal force is balanced by the centrifugal force on the carriers.

2. A process according to claim 1 in which the electric potential is created between the inner electrode and an outer electrode radially spaced from the inner electrode.

3. A process according to claim 2 in which the outer electrode provides the said source of the charge carriers.

4. A process according to claim 1 or claim 2 in which the chamber is maintained at a sub-atmospheric pressure.

5. A process according to claim 1 in which the electric potential drives a load connected between the inner electrode and a point remote from the electrode.

6. A process according to claim 1 or claim 2 in which the electric charge carriers comprise electrons or ions.

7. A process according to claim 1 in which further charge carriers of the opposite polarity traverse the magnetic field and accumulate at a second electrode to increase the potential difference between the two electrodes.

8. A process according to claim 1 in which electrically biased grids control the flow of the charge carriers from the source.

9. A process according to claim 1 in which the charge carriers are separated from charge carriers of the opposite polarity before being introduced into the magnetic field.

10. A process according to claim 9 in which the charge carriers of opposite polarity are introduced into a corresponding second magnetic field, whereby a potential difference is produced between respective electrodes in each field.

11. A process according to claim 1 in which the carriers are injected into the magnetic field.

12. A process according to claim 11 in which the injection energy is produced by accelerating the carriers through an electric field.

13. A process according to claim 11 in which the injection energy is produced by accelerating the carriers through a magnetic field.

14. A process according to claim 1 in which the injection energy of the carriers is produced by nuclear emission.

15. A process according to claim 1 in which the injection energy of the carriers is produced by heat.

16. A process according to claim 1 in which the generated electric potential is directly or indirectly used to maintain the generation of charge carriers or the internal temperature of the space traversed by the magnetic field, or the applied magnetic field.

17. A process according to claim 1 in which the generated electric potential is directly or indirectly used to maintain the generation of charge carriers and the internal temperature of the space traversed by the magnetic field and the applied magnetic field.

18. An energy converter including a source of electric charge carriers of a predetermined polarity, a process chamber having an inner electrode, means for accelerating the carriers away from the source and for introducing the carriers into the chamber, means for applying a magnetic field transverse to the path of the carriers and bounding the inner electrode of the chamber such that the carriers orbit the electrode while accelerating radially toward the electrode, the electrode being located at a radius which exceeds the equilibrium radius for the carrier mean velocity and applied field strength and intercepting the carriers such that the increased kinetic energy of the carriers due to centripetal acceleration is converted to an electric potential at the electrode.

19. An energy converter according to claim 18 in which the chamber includes an outer electrode spaced radially from the inner electrode, and means for injecting the charge carriers into the space between the electrodes.

20. An energy converter according to claim 19 in which the outer electrode provides the said source of charge carriers.

21. An energy converter according to claim 19 further comprising an insulating wall bounding the outer electrode.

22. A converter according to claim 18 further comprising means for maintaining the chamber at a predetermined sub-atmospheric pressure.

23. A converter according to claim 19 in which the outer electrode has at least one port through which the charge carriers can be injected into the chamber along a desired trajectory.

24. A converter according to claim 23 in which the outer electrode has plural ports and each port communicates with a thermionic source of the respective carriers.

25. A converter according to claim 18 in which the chamber is a vacuum chamber.

26. A converter according to claim 18 further comprising electrically biased grids for controlling the flow of charge carriers from the source.

27. A converter according to claim 22 or claim 25 in which the evacuated chamber comprises a sealed unit.

28. A converter according to claim 18 further comprising means for adjusting the strength of the applied magnetic field.

29. A converter according to claim 18 in which the chamber is filled with low pressure gas.

US Patent 3,913,004 14th October 1975 Inventor: Robert W. Alexander

METHOD AND APPARATUS FOR INCREASING ELECTRICAL POWER

This patent shows a method of altering a standard electrical generator intended to be driven by a separate motor, so that it operates without the motor. In an example quoted, a DC input of 48 volts at 25 amps of current (1.2 kW) produces a 110 volt 60Hz AC output of 3.52 kW. That is a Coefficient Of Performance of 2.93 at an output level suited to Off-The-Grid operation of a house.

ABSTRACT

A form of rotating machine arranged in such a way as to convert a substantially constant input voltage into a substantially constant output voltage; involving generally, a rotor that revolves at a substantially constant speed within a stator, and which comprises a transformer core subjected to and having a primary motor-transformer winding and a secondary transformer-generator winding; whereby transformed and generated power are synchronously combined as increased output power.

BACKGROUND

Electrical power is frequently changed in voltage, phase, frequency, and the current is changed from alternating to direct or from direct to alternating. Voltage conversion in AC circuits is usually by means of transformers, and in DC circuits is usually by means of motor-generators. Phase conversion is also accomplished by either transformers or motor-generators, and frequency conversion is most simply done by motor-generators.

Motor-generators have various classifications of use, as follows:

(1) DC to DC, used to charge batteries and to boost voltage.
(2) AC to AC, used for frequency and phase conversion
(3) AC to DC used for all types of service, such as battery charging, generator and motor field excitation, railways, electrolysis, and speed control etc. and
(4) DC to AC used to limited extent for special applications.

To these ends combination motor-generators have been built, such as dynamotors stepping up DC voltage for radio equipment and amplidynes for reproducing a weak signal at a higher power level. When a particular variable frequency A.C. is required of a motor-generator set and the power supply is DC, the equipment will include a DC motor for variable speed and a separate alternator driven by it. Such equipment is special in nature and characterised by separation of the motor and generator and by polyphase (usually three-phase) generator windings and with auto transformers having suitable taps for obtaining the required voltages; and a DC speed controller for the motor. The phase output of such equipment is selective and its single phase capacity necessarily restricted (66%) as compared with its three-phase capacity, in which case transmission efficiency for single phase is poor.

When a higher level power output is desired, the amplidyne is employed with field windings and brushes equipped for the purpose, and in some instances to give a constant current output from a constant voltage input, for example, in inverted rotary converter provided to convert DC to A.C. However, the present invention is concerned with method and apparatus for increasing electrical power and provides a dynamo-electric converter that operates from an electrical energy supply to produce A.C. most efficiently for a useful load.

The method involves simultaneous motor-transformer-generator steps and the preferred embodiment of the apparatus involves a dynamo-electric converter (DEC) in the form of a rotary machine combined in a single rotor revolving within a stator, the rotor being comprised of a transformer core having both a primary motor-transformer winding and a secondary transformer-generator winding, and the stator being comprised of magnetic field poles.

Synchronous converters have been combined in single rotor machines to produce DC from A.C., but that effect is quite different from the effect of the present invention when A.C. is to be produced from DC in a single rotor having primary and secondary armature windings as distinguished from armature windings common to both A.C. and DC circuits. With the present invention, both a transforming and a generating effect are produced in the rotor, all of which is inherently synchronised and delivered through the A.C. outlet leads. A.C. motors and DC generators have been combined in one machine, that is in one rotor, and referred to as synchronous converters.

However, synchronous converters are lacking in their ability to change DC into A.C. when operating from the former as a prime mover to drive a generator simultaneously, and more specifically to drive an alternator synchronously.

SUMMARY OF INVENTION

This method involves the placement of a primary winding in a field to both motor the same and to have a transformer effect with respect to a secondary winding also in a field to have a generator effect. In its preferred embodiment, this dynamo-electric converter is comprised of primary and secondary windings combined in a rotor commutated to alternate a DC energy supply in and thereby motivate the rotor within a stator field. The primary winding is advantageously of fewer turns than the secondary and by means of electromotive force drives the secondary windings of more turns to cut the magnetic lines of force for the generation of electrical energy at a higher voltage level than the DC supply. This DC operated motor is shunt wound with the stator field poles fully energised by the DC energy supply, or is provided with permanent magnet field poles, to efficiently motivate the rotor and efficiently generate electrical energy in the secondary windings. The A.C. output of the secondary windings is inherently synchronised with the transformer function of the primary windings combined in the common slots of the single rotor; and by adding the transformer and generator voltages and amperages the wattage is correspondingly increased at the output.

DRAWINGS

The various objects and features of this invention will be fully understood from the following detailed description of the typical preferred form and application, which is made in the accompanying drawings, in which:

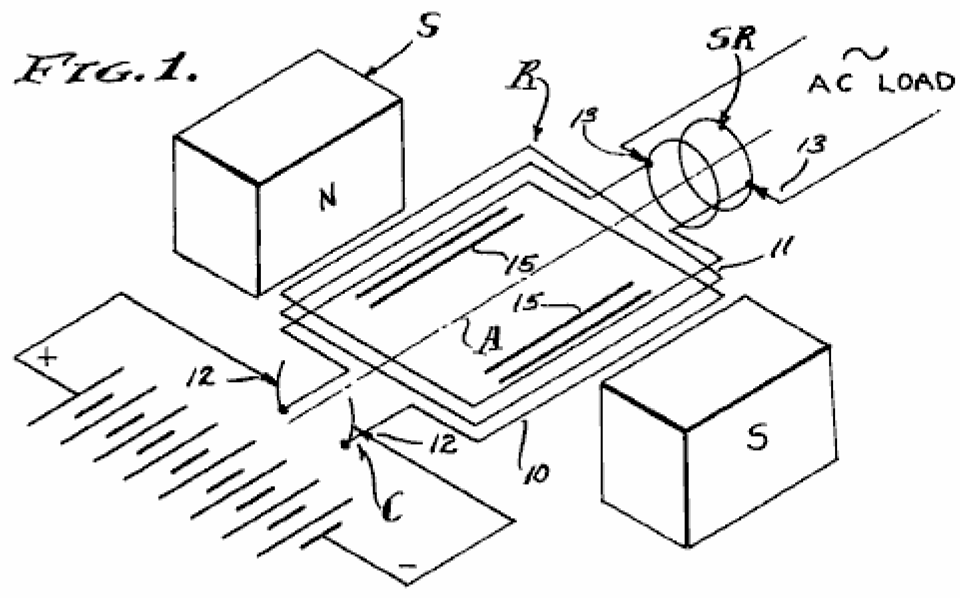

Fig.1 is a diagrammatic schematic view of the dynamo-electric converter components comprising the present invention.

FIG. 2.

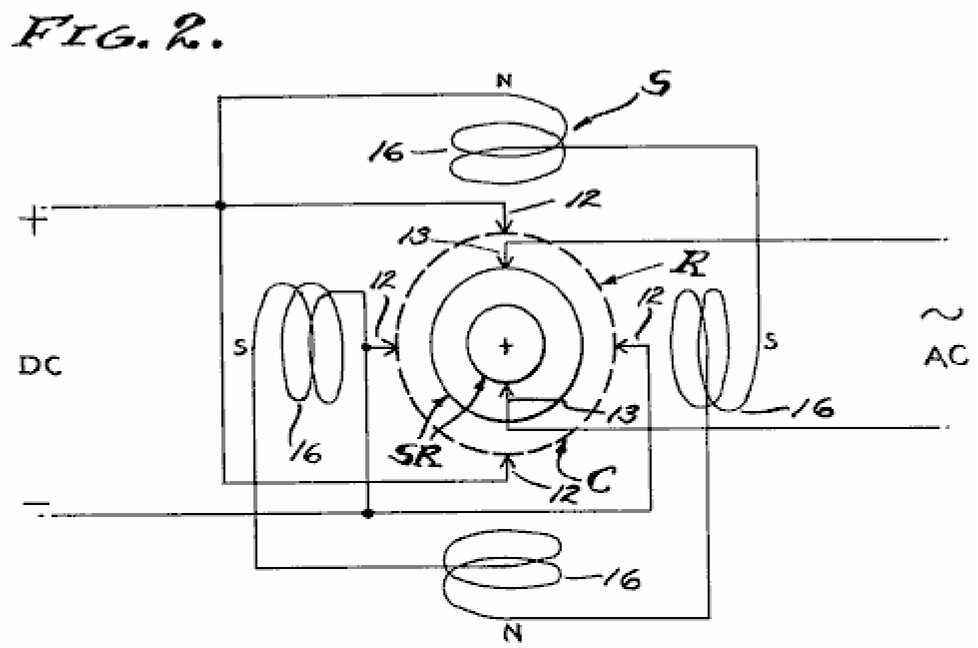

Fig.2 is a diagram of a typical commutator brush, slip ring brush and field pole arrangement which is utilised.

FIG. 3.

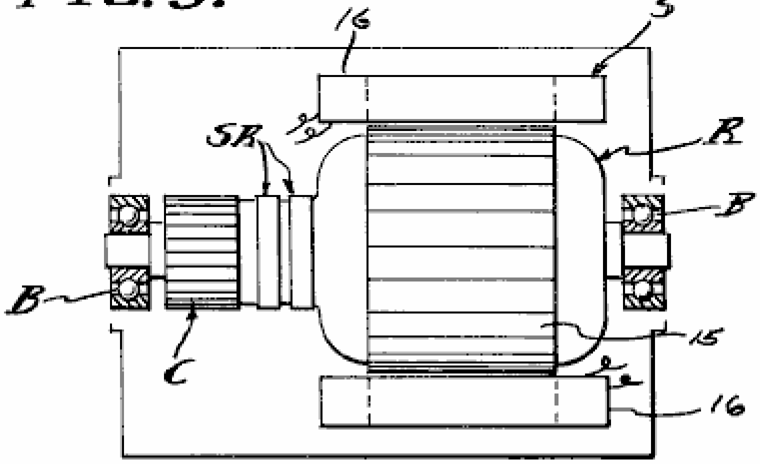

Fig.3 is a longitudinal section through a machine embodying the stator and rotor on bearings with the frame and brushes removed.

FIG.4.

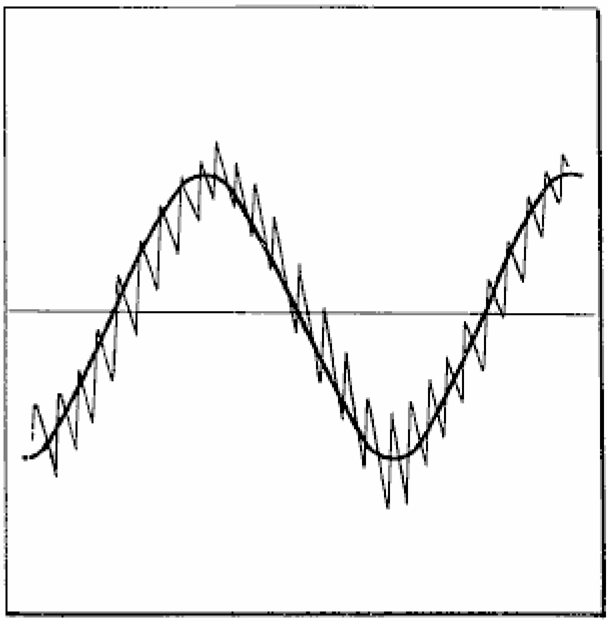

Fig.4 is a typical duplicate of an oscilloscope diagram showing the power output of the dynamo-electric converter.

PREFERRED EMBODIMENT

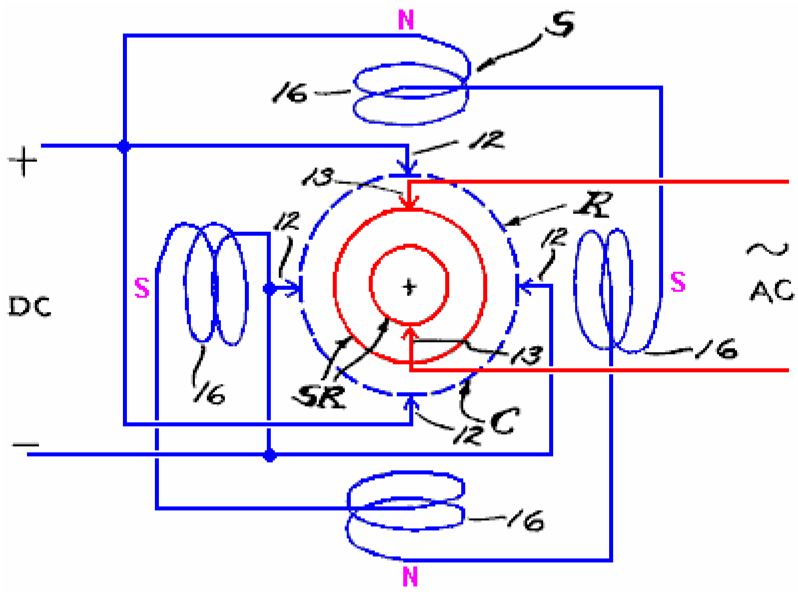

The dynamo-electric converter is illustrated diagrammatically in the drawings and involves, generally, a rotor **R** carried upon spaced bearings **B** so as to rotate on an axis **A** concentric within a stator **S**. The rotor **R** comprises the armature, while the stator **S** comprises the field, there being a commutator **C** associated with primary windings **10** on the rotor and slip rings **SR** associated with secondary windings **11** on the rotor. Brushes **12** and **13** are engaged slideably with the commutator and slip rings respectively, by conventional means, to conduct DC through the commutator **C** and to conduct AC through the slip rings **SR**. The brushes **12** and interconnected primary windings **10** comprise a motor while the brushes **13** and interconnected secondary windings **11** comprise a generator or alternator.

In practice, the field windings **16** can be separately energised or connected in parallel with the brushes **12** or shunted with respect to the primary motor winding **10**. Motorisation of the armature rotor **R**, or motoring thereof, causes continued polarity reversals on a cycle basis as determined by the speed of rotation, and this of course results in magnetic reversals in the rotor core **15** and a consequent induction in the secondary windings **11**. A feature of this invention is the combining and co-operative relationship of the primary and secondary windings which occupy common slots in and embrace a common portion of the core **15** of the rotor **R**, thereby to have a transformer function as well as a generator function as the lines of magnetic force are cut by the secondary windings. The stator **S** has field poles of opposite magnetic polarity, excited independently from the armature, or as permanent magnets, and preferably shunted across the DC input. As shown, there are four equally spaced field poles in a circumferentially disposed series.

In practice, the primary DC motor windings are of fewer turns in the rotor slots than the secondary AC generator windings. For example, the primary motor windings **10** are flat wound between north to south poles of the field while the secondary generator windings are flat wound in the same or common slots of the rotor armature. In a typical unit having a four brush commutator with 20 bars and having a 20-slot armature, the primary windings **10** are comprised of a number of turns of conductor efficiently to draw 48 volts DC at 25 amperes or 1,200 watts to rotate at 1,750 rpm, while the secondary windings **11** are comprised of a number of turns of conductor efficiently to deliver 60 cycle (by transforming and generating) 110 volts AC at 32 amperes or 3,520 watts, the volt meter used to read these values upon an actual reduction to practice being calibrated to read the root-mean-square (RMS) value of the pure sine wave, which is 70.7% of the peak voltage.

The reduction to practice previously referred to as a "typical unit" was constructed of a machine originally designed as a self-exciting 60 cps 110 volt 2.5 kVA generator to be shaft driven by a separate prime mover. Firstly, the prime mover was eliminated. The exciter windings were intended to excite the field at 45 volts DC delivered through the commutator, while the generator windings were intended to independently deliver 110-120 volts AC through the slip rings. The winding ratio between the exciter and generator windings was approximately one to three, and these are the values which determined the values employed in the present reduction to practice. However, it is to be understood that other values can be employed by design, for operation at the desired input and output voltages and amperages. It is also to be understood that the example reduction to practice disclosed herein is not necessarily the optimum design, in that other input-output power balances are contemplated, such as a DC battery input voltage substantially equal to the AC power voltage. In any case, an unexpected increase in power is realised by practising this invention.

This dynamo electric converter inherently operates at a substantially constant angular velocity with the result that the alternating cycles of the output are substantially constant. Also, the DC input voltage can be maintained at a substantially constant level with the result that the AC output voltage is also substantially constant. As shown, the output is single phase AC in which case the effective power in watts delivered is the product of current, voltage and power factor. Since the voltage is substantially constant, the current varies with load applied to the output as it is affected by the power factor. It will be seen therefore, that the apparent power represented by voltage times amperage is drawn directly from the DC input and applied to the primary motor winding **10** to motivate the rotor **R** for the functions previously described. It will also be seen therefore, that the DC input is commutated into AC and transformed by induction from windings **10** into windings **11**.

It will also be seen therefore, that the AC generated by motorisation of the motor is synchronously imposed upon the windings **11**, and all to the end that the two alternating currents are complementary and one added to the other. It will be observed that the output wattage is approximately triple the input wattage, by virtue of the synchronous superimposing of transformed input voltage and generated voltage while utilising the former to operate the rotor in order to generate the latter. A feature of this invention is the separation of the primary and secondary circuits and the consequent isolation of the inverted input DC from the outlet AC and the utilisation of input energy commensurate with output load according to amperage required for the operations to which this DEC machine is applied.

In carrying out this invention, the dynamo electric machine is conventional in design and the primary and secondary windings **10-11** are wound into the common slots of the armature as they are in self exciting generators. However, the primary windings **10** are motor-transformer windings and function totally as such. Similarly, the secondary windings **11** are wound into the armature slots together with the primary windings **10** and are powered with current that is alternated by virtue of the commutation and rotation of the armature, and consequently there is a transformer action between the primary windings **10** and secondary windings **11**, and this transformer function is supplemented by generation of a superimposed current by virtue of the secondary windings **11** cutting the magnetic lines of force provided by the surrounding stator field. Consequently, there is a multiplying of power synchronously applied through the slip rings **SR** to the output brushes **13**, and this increased output power is measurable as previously described and double or almost triple that of the input power.

METHOD

Referring now to this method of increasing electrical power, input alternating current is applied to a primary winding to both motor and alternately magnetise a core. The said primary winding is immersed in a field and consequently is caused to motor and simultaneously to perform the first stage of transforming. A second stage of transforming is then performed by a secondary winding associated with the core to function as both a transformer and a generator winding, and the output current is drawn from it at an increased power value as compared with the input power, since the current induced by transformer action is superimposed upon the current generated in cutting the magnetic lines of force by motoring the secondary winding through the magnetic field. The direct application of AC power to the primary winding is contemplated, however the present and preferred embodiment employs commutation of DC power which is thereby inverted to AC power in the process of motoring the windings and the core in which they are carried together with the secondary winding. The net result is three fold, in that there is a motoring function, a transforming function, and a generating function, all of which are inherently synchronised to increase the output power with respect to the input power.

Fig.4.

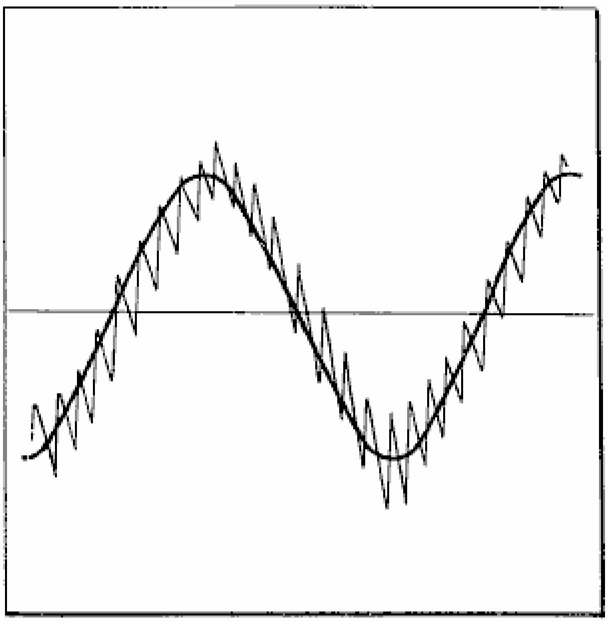

From the foregoing it will be seen that this method, and the dynamo-electric converter termed a DEC, synchronously superimposes transformed electrical energy and mechanically generated electrical energy when inverting DC to AC as is shown by observing the oscilloscope diagram duplicated in **Fig.4** of the drawings. The DC motor section of the rotor-stator unit will operate at its designed speed well within a small tolerance, by applying known engineering principles, and consequently, the AC generator-alternator section will operate at a substantially uniform frequency of, for example, 60 cycles per second. Thus, the output voltage potential is kept to a maximum while current is drawn as required, within the design capacity of the unit.

Having described only a typical preferred form and application of my invention, I do not wish to be limited or restricted to the specific details herein set forth, but wish to reserve to myself any modifications or variations that may appear to those skilled in the art:

CLAIMS

1. A dynamo-electric converter for inverting direct current voltage to alternating current voltage and including; a magnetic field having poles of opposite polarity, an armature coaxial with the field and having a core with means to receive windings, coaxial bearing means between the field and the armature, a primary motor-transformer winding in said means of the armature core and a commutator connected therewith, direct current input brushes which can be engaged with the said commutator, a secondary transformer-generator winding in said means of the armature core and slip rings connected therewith, and alternating current output brushes which can be engaged with the said slip rings, whereby direct current input power is both transformed and regenerated as alternating output power.

2. The dynamo-electric converter as set forth in claim 1, wherein the magnetic field is a stator comprised of said poles of opposite polarity, and wherein the armature is a rotor supported upon said bearing means coaxially within said field.

3. The dynamo-electric converter as set forth in claim 1, wherein the means to receive windings is a pair of slots in the armature core, said primary and secondary windings being carried in the slots and subjected to the magnetic capabilities of the core.

4. The dynamo-electric converter as set forth in claim 1, wherein the means to receive windings is a multiplicity of slots disposed in a circumferential series about the armature core, said primary and secondary windings being circumferentially progressive windings respectively and carried in common slots respectively and subjected to the magnetic capabilities of the core.

5. The dynamo-electric converter as set forth in claim 1, wherein the magnetic field poles are permanent magnets.

6. The dynamo-electric converter as set forth in claim 1, wherein the magnetic field poles are electro magnets energised separately from the said primary motor winding.

7. The dynamo-electric converter as set forth in claim 1, wherein the field poles are electro magnets energised in parallel with the direct current input brushes which can be engaged with the commutator.

8. The dynamo-electric converter as set forth in claim 1, wherein the magnetic field is a stator comprised of said poles of opposite polarity, wherein the armature is a rotor supported on said bearing means coaxially within said field, and wherein the means to receive windings is a pair of slots in the armature core, said primary and secondary windings being carried in the slots and subjected to the magnetic capabilities of the core.

9. The dynamo-electric converter as set forth in claim 1, wherein the magnetic field is a stator comprised of permanent magnet poles of opposite polarity, wherein the armature is a rotor supported on said bearing means coaxially within said field, and wherein the means to receive windings is a pair of slots in the armature core, said primary and secondary windings being carried in the slots and subjected to the magnetic capabilities of the core.

10. The dynamo-electric converter as set forth in claim 1, wherein the magnetic field is a stator comprised of permanent magnet poles of opposite polarity, wherein the armature is a rotor supported on said bearing means coaxially within said field, and wherein the means to receive windings is a multiplicity of slots disposed in a circumferential series about the armature core, said primary and secondary windings being circumferentially progressive windings and carried in common slots respectively and subjected to the magnetic capabilities of the core.

11. The dynamo-electric converter is set forth in claim 1, wherein the magnetic field poles are electro magnets of opposite polarity energised in parallel with the direct current input brushes which can be engaged with the commutator, wherein the means to receive windings is a multiplicity of slots disposed in a circumferential series about the armature core, said primary and secondary windings being circumferentially progressive windings respectively and carried in common slots respectively and subjected to the magnetic capabilities of the core.

12. A method for increasing electrical power and comprised of; placing a primary winding within the flux of a magnetic field and applying alternating current therethrough while motoring the same to revolve, simultaneously revolving a secondary winding with the primary winding and through a flux of a magnetic field, and simultaneously transforming the first mentioned alternating current from the primary winding and into the secondary winding while synchronously generating alternating current in the secondary winding.

13. The method of increasing electrical power as set forth in claim 12 wherein the magnetic field is held stationary and the primary and secondary windings revolved together.

14. The method of increasing electrical power as set forth in claim 12 wherein the primary and secondary windings are related to a common armature synchronously inducing into and generating electrical power through the secondary winding.

15. The method of increasing electrical power as set forth in claim 12 wherein the first mentioned alternating current is commutated from direct current to alternating current by revolvement of said primary winding.

16. The method of increasing electrical power as set forth in claim 12 wherein the magnetic field is held stationary and the primary and secondary windings revolved together and related to a common armature synchronously inducing into and generating electrical power through the secondary winding.

17. The method of increasing electrical power as set forth in claim 12 wherein the first mentioned alternating current is commutated from direct current to alternating current by revolvement of said primary winding and the primary and secondary windings related to a common armature synchronously inducing into and generating electrical power through the secondary winding.

18. The method of increasing electrical power as set forth in claim 12 wherein the first mentioned alternating current is commutated from direct current to alternating current by revolvement of said primary winding and wherein the magnetic field is held stationary and the primary and secondary windings revolved together and related to a common armature synchronously inducing into and generating electrical power through the secondary winding.

19. A dynamo-electric machine including; a first means applying a first alternating current into a primary motor-transformer winding, and a second means inducing a second alternating current into a secondary transformer-generator winding, said secondary winding being carried by said second means to operate through a flux of a field and thereby generating a third alternating current, whereby said second and third alternating currents are synchronously superimposed one upon the other.

20. The dynamo-electric machine as set forth in claim 19 wherein the field is stationary and the primary and secondary windings are rotary.

21. The dynamo-electric machine as set forth in claim 19 wherein the field is stationary and the primary and secondary windings are rotary with commutator bars synchronously applying a direct current to motorise the armature and to apply said first alternating current thereto.

22. The dynamo-electric machine as set forth in claim 19 wherein the transformer means comprises magnetic core means common to the primary and secondary windings.

23. The dynamo-electric machine as set forth in claim 19, wherein the field is stationary and the primary and secondary windings are rotary with commutator bars synchronously applying a direct current to motorise the armature and to apply said first alternating current thereto, and wherein the transformer means comprises magnetic core means common to the primary and secondary windings.

24. A rotary dynamo-electric machine including: means applying alternating current through a primary motor-transformer winding carried by an armature core carrying a secondary transformer-generator winding, a field, and bearing means for rotation of the armature core relative to the field, whereby the alternating current applied to the primary winding motors the armature and is transformed and an alternating current generated and superimposed thereon through the secondary winding for increased output power.

25. The rotary dynamo-electric machine as set forth in claim 24 wherein the primary and secondary windings are each comprised of a number of turns of conductor to transform the first mentioned applied alternating current to the voltage of the alternating current generated through the secondary winding.

26. The rotary dynamo-electric motor as set forth in claim 24 wherein the first mentioned applied alternating current is of different voltage than the increased output power and wherein the primary and secondary windings are each comprised of a number of turns of conductor to transform the first mentioned applied alternating current to the voltage of the alternating current generated through the secondary winding.

27. The rotary dynamo-electric machine as set forth in claim 24 wherein the first mentioned applied alternating current is of lower voltage than the increased output power and wherein the primary and secondary windings are each comprised of a number of turns of conductor to transform the first mentioned applied alternating current to the voltage of the alternating current generated through the secondary winding.

SHIGEAKI HAYASAKA: INDUCTION GENERATOR

Patent US 5,892,311 6th April 1996 Inventor: Shigeaki Hayasaka

INDUCTION GENERATOR HAVING A PAIR OF MAGNETIC POLES OF THE SAME POLARITY OPPOSED TO EACH OTHER WITH RESPECT TO A ROTATION SHAFT

This patent covers a device which is claimed to have a greater output power than the input power required to run it.

ABSTRACT

An induction generator having a pair of magnetic poles of the same polarity opposed to each other with respect to a rotation shaft is characterised by a high energy conversion efficiency. The induction generation has a rotation shaft driven by an external means; an even number of (more than three) stator cores provided to encircle the rotation shaft, predetermined gaps being provided between the adjacent stator cores; a first monopole rotor provided in the rotation shaft, surrounded by the even number of stator cores, and having first and second magnetic poles of the same polarity, the first and second magnetic poles being opposed to each other with respect to the rotation shaft in a cross section; a second monopole rotor provided in the rotation shaft so as to face the first monopole rotor at a predetermined distance along the rotation shaft, surrounded by the even number of stator cores, and having third and fourth magnetic poles of the same polarity opposite to the polarity of the first and second magnetic poles, the third and fourth magnetic poles being opposite to each other with respect to the rotation shaft; a plurality of windings provided in the even number of stator cores and connected according to a predetermined configuration.

US Patent References:

282472	Jan., 1883	Delaporte	318 / 197.
2982872	May., 1961	Fredrickson	310 / 163.
3858308	Jan., 1975	Peterson	29 / 598.
4780635	Oct., 1988	Neumann	310 / 216.
5030867	Jul., 1991	Yamada et al.	310 / 156.
5111095	May., 1992	Hendershot	310 / 168.
5402025	Mar., 1995	Saito et al.	310 / 156.

Other References:

Publication "Novel Reluctance Machine Concepts for Variable Speed Drives", Lipo, T.A., Proceedings from the Mediterranean Electrochemical Conference, Ljubljana, May 22-24, 1991, pp. 34-43.

DESCRIPTION

TECHNICAL FIELD

The present invention relates to an induction generator having a pair of magnetic poles of the same polarity opposed to each other with respect to a rotation shaft.

Induction generators have been known as one type of electrical appliance from relatively old days and embodied in various forms adapted for individual applications. In addition to applications in power plants, ships and aircraft, induction generators convenient for household or leisure purposes have also been developed and used extensively.

An induction generator converts kinetic energy into electric energy. Due to a necessity for improving efficiency of energy utilisation, there is a demand for a highly efficient energy conversion.

BACKGROUND ART

As is well known, an induction generator is operated on the principle that an electromotive force is induced in a coil, in proportion to the rate at which magnetic flux crosses that coil (Faraday's law of electromagnetic induction). According to Lenz's law, an induced electromotive force is generated in a direction in which a current that acts against a change in the magnetic flux is generated.

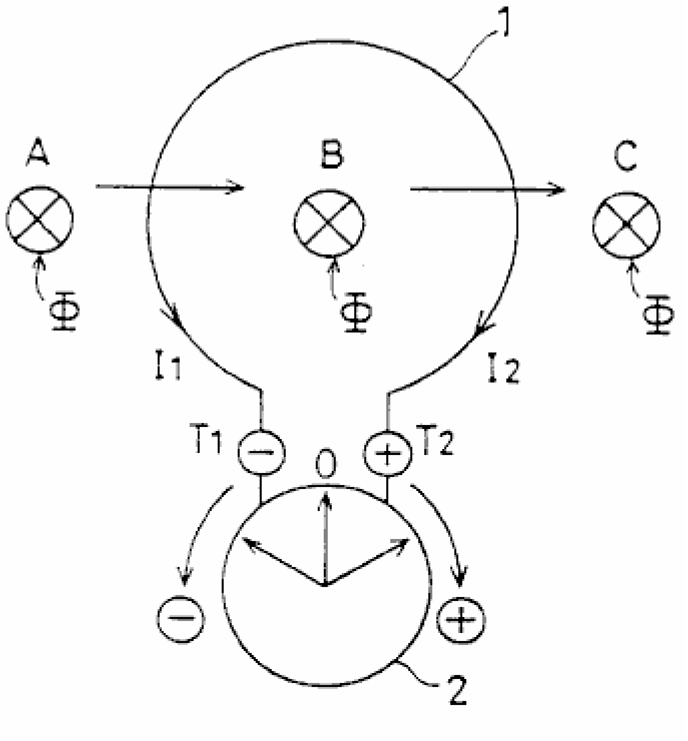

FIG. 1A

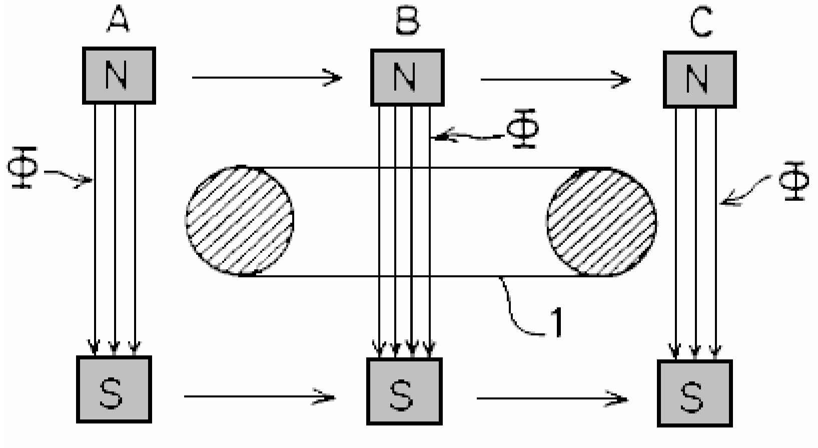

FIG. 1B

For example, as shown in **Fig.1A** and **Fig.1B**, assuming that the magnetic flux **phi** crossing a circular coil **1** at a perpendicular direction moves in the **A to B** direction as indicated by the arrow, a current $\mathbf{I_1}$ flows in accordance with Faraday's law of electromagnetic induction so that the pointer of a galvanometer **2** swings clockwise (+ direction) and then returns to the zero position. When the magnetic flux **phi** moves in the direction **B to C**, a current $\mathbf{I_2}$ flows so that the indicator of the galvanometer **2** swings counterclockwise (- direction) and then returns to the zero position.

Generally, an induction generator is constructed in such a way that an electromotive force is induced according to Flemming's right-hand rule by a conductor cutting magnetic flux lines (**Fig.1A**) or by the magnetic flux lines crossing the conductor (**Fig.1B**).

A rotor in an induction generator is usually constructed as a one-piece body having alternately disposed North poles and South poles. When there are two magnetic poles, the N-pole and the S-pole are opposite to each other. When there are more than two magnetic poles (for example, four magnetic poles or six magnetic poles etc.), the N-pole and the S-pole alternate, resulting in a N-S-N-S- . . . succession.

In this background, a unipolar induction generator is a special case wherein an electromotive force is generated by a conductor cutting the magnetic flux while moving or rotating, and a direct current is supplied through a slip ring. In other words, a unipolar induction motor is unique in its construction characterised by a non-alternating magnetic field travelling in the same direction.

In the conventional induction generator such as the one described above, improvement in energy conversion efficiency is attained such that the rotor is constructed of a ferrite, or rare-earth, magnet characterised by a high energy product and a small reversing permeability (recoil permeability). Alternatively, the extent of demagnetisation due to generation of a counter magnetic field in an induction coil is reduced allowing the single polarity of the rotor to interact with the stator in forming a magnetic circuit. However, despite these measures, reduction in energy conversion efficiency due to a counter magnetic field of the rotor core, more specifically, due to demagnetisation resulting from the counter magnetic field caused by armature reaction presents a serious problem.

The present invention has been developed in view of the above points, and its object is to provide an induction generator having a pair of magnetic poles of the same polarity opposed to each other with respect to a rotation shaft, wherein a high energy conversion efficiency is attained.

DISCLOSURE OF THE INVENTION

The present invention provides an induction generator having a pair of magnetic poles of the same polarity opposed to each other with respect to a rotation shaft, characterised by comprising:

A rotation shaft driven by external means;

An even number of (more than three) stator cores provided to encircle the rotation shaft, predetermined gaps being provided between the adjacent stator cores;

A first single-opposed polarity rotor provided in the rotation shaft, surrounded by the even number of stator cores, and having first and second magnets magnetised such that the even number of stator cores remain facing a first polarity, the first and second magnets being opposed to each other with respect to the rotation shaft in a cross section;

A second single-opposed-polarity rotor provided in the rotation shaft so as to face the first single-opposed-polarity rotor at a predetermined distance along the rotation shaft, surrounded by the even number of stator cores, and having third and fourth magnets magnetised such that the even number of stator cores remain facing a second polarity which is opposite to the polarity of the first polarity, the third and fourth magnets being disposed opposite to each other with respect to the rotation shaft;

A plurality of windings provided in the even number of stator cores and connected according to a predetermined configuration, characterised in that:

A rotating magnetic field which causes electromagnetic induction in the even number of stator cores successively is created by the first, second, third and fourth magnets when the first and second single-opposed-polarity rotors are rotated; and

Periodic increase and decrease in the number of magnetic flux lines crossing a given winding and associated periodic decrease and increase crossing an adjacent winding causes a periodic electromotive force having a rectangular waveform to be output.

In one aspect of the present invention, the plurality of windings connected according to the predetermined configuration form first and second serial circuits:

The first serial circuit outputs a periodic first electromotive force having a rectangular waveform when a rotating magnetic field which causes electromagnetic induction in the even number of stator cores successively is created by the first, second, third and fourth magnets when the first and second single-opposed-polarity rotors are rotated; and

The second serial circuit outputs a periodic second electromotive force of a rectangular waveform 180^0. out of phase with the first electromotive force and having the same period as the first electromotive force, when a rotating magnetic field which causes electromagnetic induction in the even number of stator cores successively is created by the first and second single-opposed-polarity rotors are rotated.

The induction generator of the present invention may also comprise:

Rotation position detecting means for detecting a position of the first and second single-opposed-polarity rotors during their rotation; and

Switching means which alternately causes positive components of the first electromotive force having a rectangular waveform and provided by the first serial circuit, or positive components of the second electromotive force having a rectangular waveform and provided by the second serial circuit to be output at intervals of an electrical angle of 180^0.

In another aspect of the present invention, the plurality of windings comprise a first winding provided in a first stator core of the even number of stator cores, a second winding provided in a second stator core adjacent to the first stator core so as to wind in a direction opposite to a direction in which the first winding is provided, a third winding provided in a third stator core adjacent to the second stator core so as to wind in the same direction as the first winding, a fourth winding provided in a fourth stator core adjacent to the third stator core so as to wind in a direction opposite to a direction in which the third winding is provided, the first through fourth windings being connected with each other according to a predetermined configuration.

In still another aspect of the present invention, the first serial circuit comprises a first winding provided to wind in a first direction in a first stator core of the even number of stator cores, a second winding serially connected to the first winding and provided in a second stator core adjacent to the first stator core so as to wind in a second direction opposite to the first direction, a third winding serially connected with the second winding and provided in a third stator core adjacent to the second stator core so as to wind in the first direction, a fourth winding serially connected to the third winding and provided in a fourth stator core adjacent to the third stator core so as to wind in the second direction; and

The second serial circuit comprises a fifth winding provided to wind in the second direction in the first stator core, a sixth winding serially connected to the fifth winding and provided in the second stator core so as to wind in the first direction, a seventh winding serially connected with the sixth winding and provided in the third stator core so as to wind in the second direction, an eighth winding serially connected to the seventh winding and provided in the fourth stator core so as to wind in the first direction.

In yet another aspect of the present invention, the first through fourth magnets are arc-shaped; and

the even number of stator cores have arc-shaped cross sections.

In still another aspect of the present invention, the arc-shaped first through fourth magnets and the stator cores which have arc-like cross sections have an almost identical circumferential length.

BRIEF DESCRIPTION OF THE DRAWINGS

Fig.1A and **Fig.1B** are diagrams explaining the principle of an induction generator;

Fig.2A and **Fig.2B** are diagrams showing a first embodiment of the present invention;

Fig.3A and **Fig.3B** are diagrams showing a single-opposed-polarity rotor **11N** according to the first embodiment of the present invention;

Fig.4A and **Fig.4B** are diagrams showing a single-opposed-polarity rotor **11S** according to the first embodiment of the present invention;

Fig.5A, **Fig.5B** and **Fig.5C** are diagrams showing how wirings are connected with each other according to the first embodiment of the present invention;

Fig.6A is a diagram schematically showing how a rotating magnetic field according to the first embodiment crosses windings **7c-10c**;

Fig.6B shows a magnetic path;

Fig.7 is a diagram showing a waveform of an output voltage according to the first embodiment;

Fig.8A and **Fig.8B** are diagrams showing a second embodiment of the present invention;

Fig.9 is a diagram showing how wirings are connected with each other according to a second embodiment; and

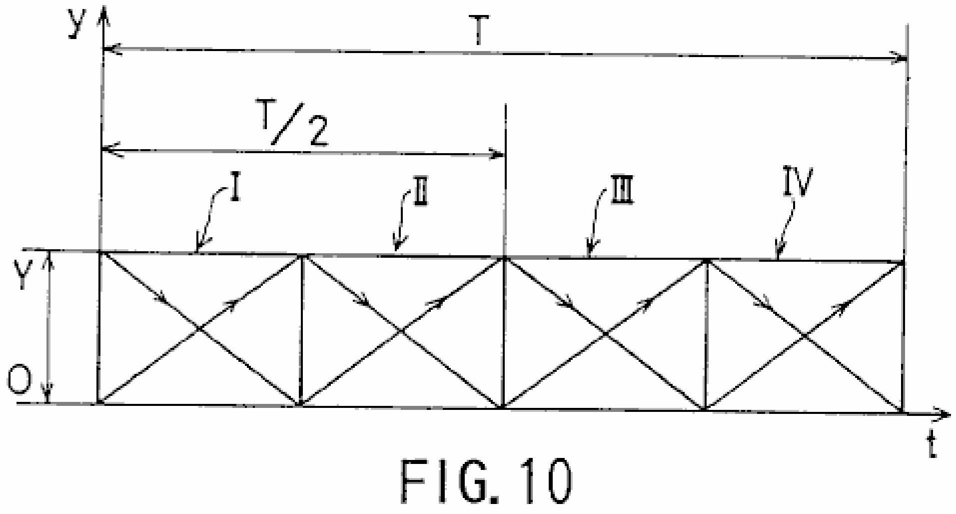

FIG. 10

Fig.10 is a diagram showing a waveform of an output voltage according to the second embodiment.

BEST MODE FOR CARRYING OUT THE INVENTION

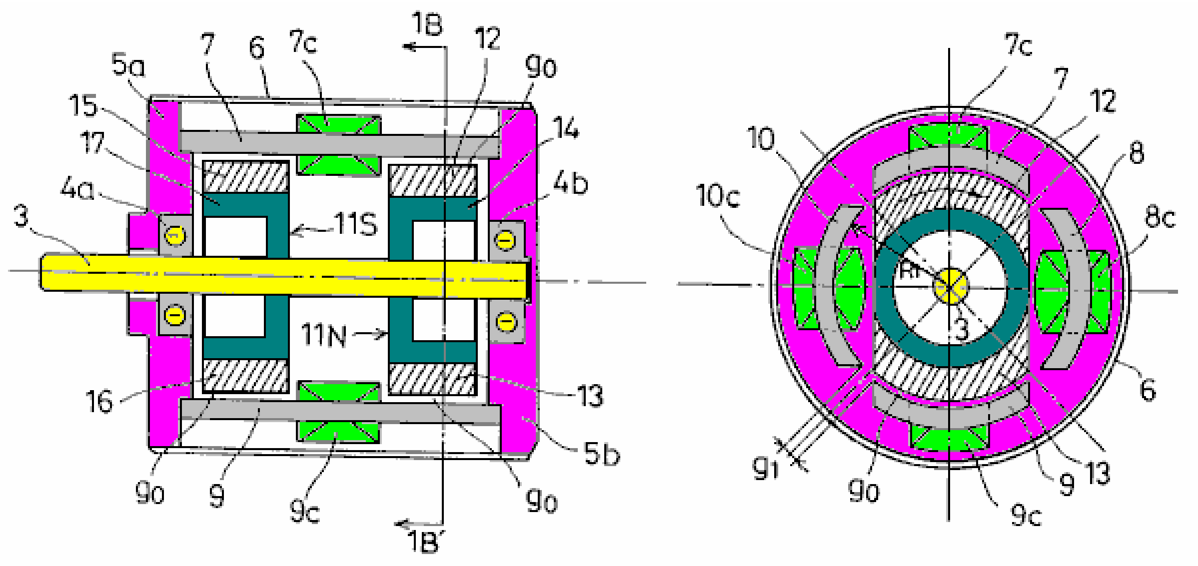

FIG. 2A

FIG. 2B

Fig.2A and **Fig.2B** show a first embodiment of the present invention. Specifically, **Fig.2A** is a longitudinal sectional view and **Fig.2B** is a cross-sectional view taken in the line **1B-1B'** of **Fig.2A**.

Referring to **Fig.2A** and **Fig.2B**, **3** indicates a rotation shaft formed of a non-magnetic material and driven by an external means; **4a** and **4b** bearings for supporting the rotation shaft **3**; **5a** and **5b** are flanges provided with the bearings **4a** and **4b**, respectively; and **6** is a cylindrical case cover for accommodating the flanges **5a** and **5b**.

Stator cores **7**, **8**, **9** and **10** are arranged so as to encircle the rotation shaft **3**, equidistant gaps $\mathbf{g_1}$ being provided between the adjacent stator cores. Each of the stator cores **7**, **8**, **9** and **10** has the same arc-like cross section.

A single-opposed-polarity N-pole rotor **11N** and a single-opposed-polarity S-pole rotor **11S** are provided on the rotation shaft **3** so as to be opposite to each other. The single-opposed-polarity rotors **11N** and **11S** are surrounded by the stator cores **7**, **8**, **9** and **10**, a small rotation gap $\mathbf{g_0}$ being provided between the single-opposed-polarity rotor and the stator core.

Referring to **Fig.2B**, windings **7c** and **9c** are provided clockwise around the stator cores **7** and **9**, respectively. Windings **8c** and **10c** are wound counterclockwise around the stator cores **8** and **10**, respectively. The windings **7c**, **8c**, **9c** and **10c** are connected with each other in a configuration described later.

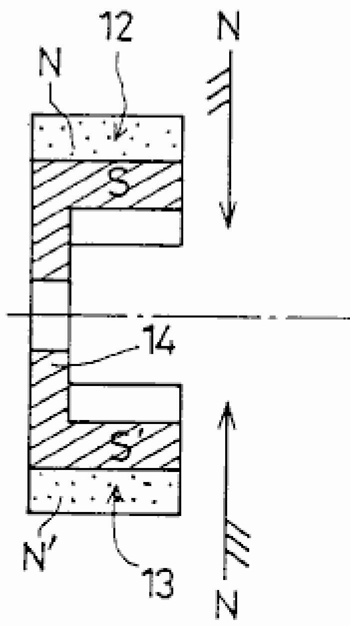

FIG. 3A

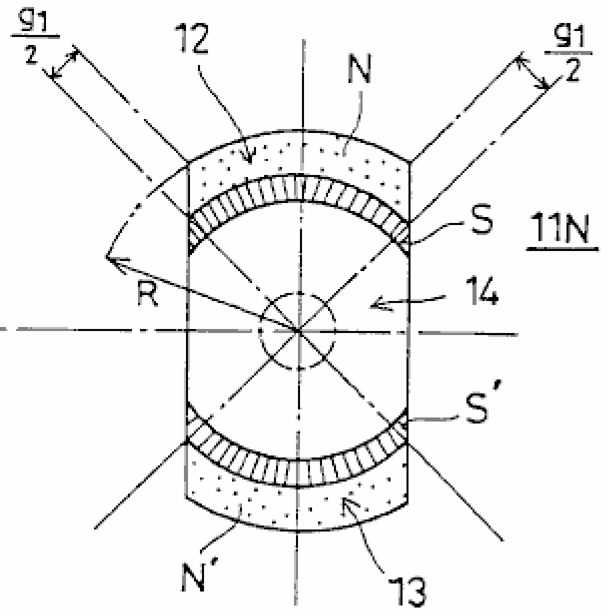

FIG. 3B

Fig.3A and **Fig.3B** show the single-opposed-polarity rotor **11N**. Specifically, **Fig.3A** is a longitudinal sectional view, and **Fig.3B** is a cross-sectional view. The single-opposed-polarity rotor **11N** has arc-shaped magnets **12** and **13** which are 180^0 displaced from each other and are magnetised such that their surfaces which face the stator cores **7-10** are N-poles while their inner surfaces are S-poles. The arc-shaped magnets **12** and **13** are configured to match the outline of the stator cores **7**, **8**, **9** and **10**. Referring to **Fig.3B**, the symbols **N** and **N'** are used so as to differentiate between the magnets **12** and **13**.

A rotor piece **14** is positioned so as to connect the arc-shaped magnets **12** and **13**. The rotor piece **14** is magnetised by the arc-shaped magnets **12** and **13** so that it's surfaces which face the arc-shaped magnets **12** and **13** are S-poles and is formed of a substance (for example, a silicon steel) constructed of a low carbon steel having mixed therein several percent of non-ferrous metal subjected to a forging-cast process. The iron core embodied by the rotor piece **14** thus constructed is characterised by a well-balanced magnetic field where the permeability approximates a peak value in a unipolar magnetic field that the iron core presents to its surroundings.

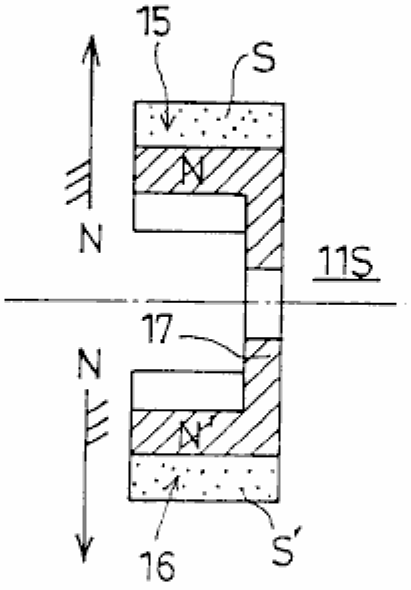

FIG. 4A

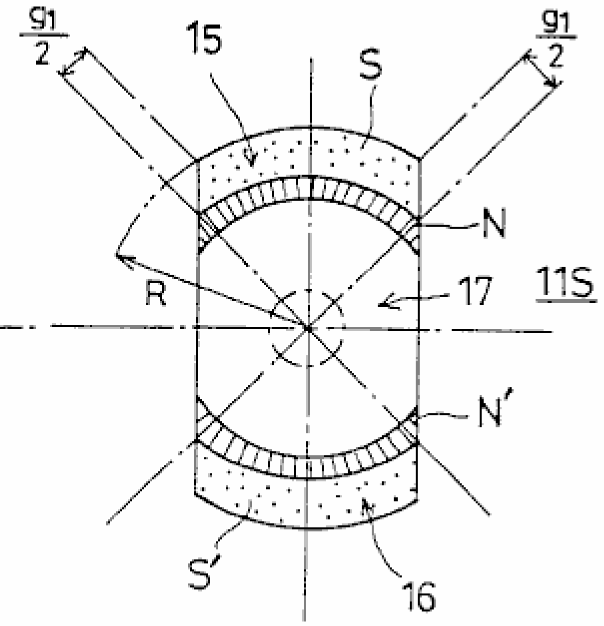

FIG. 4B

Fig.4A and **Fig.4B** show the single-opposed-polarity rotor **11S**. Specifically, **Fig.4A** is a longitudinal sectional view, and **Fig.4B** is a cross-sectional view.

The single-opposed-polarity rotor **11S** has arc-shaped magnets **15** and **16** which are 180^0 displaced from each other and are magnetised such that the surfaces thereof facing the stator cores **7-10** are S-poles while their inner surfaces are N-poles. The arc-shaped magnets **15** and **16** are configured to match the outline of the stator cores **7**, **8**, **9** and **10**.

A rotor piece 17 is positioned so as to connect the arc-shaped magnets **15** and **16**. The rotor piece **17** is magnetised by the arc-shaped magnets **15** and **16** so that it's surfaces which face the arc-shaped magnets **15** and **16** are N-poles. The rotor piece is made from a substance constructed from a low carbon steel having mixed in it, several percent of non-ferrous metal subjected to a forging-cast process. The iron core embodied by the rotor piece **17** thus constructed is characterised by a well-balanced magnetic field where the permeability approximates a peak value in a unipolar magnetic field that the iron core presents to its surroundings.

The arc-shaped magnets **12**, **13**, **15** and **16** have the same circumferential length, which is also equal to the length of the arc formed by the circumference of the stator cores **7**, **8**, **9** and **10**. More specifically, this length is obtained by dividing the entire hypothetical circumference minus the four $\mathbf{g_1}$ gaps by four. Referring to **Fig.2A** and **Fig.2B**, the rotation gap $\mathbf{g_0}$ is equal to $\mathbf{R_1}$ - **R**, where $\mathbf{R_1}$ is a distance between the centre of the rotation shaft **3** and the inner surface of the stator cores **7-10**, and **R** is a distance between the centre of the rotation shaft **3** and the outer surface of the single-opposed-polarity rotors **11N** and **11S**, as indicated in **Fig.3B** and **Fig.4B**.

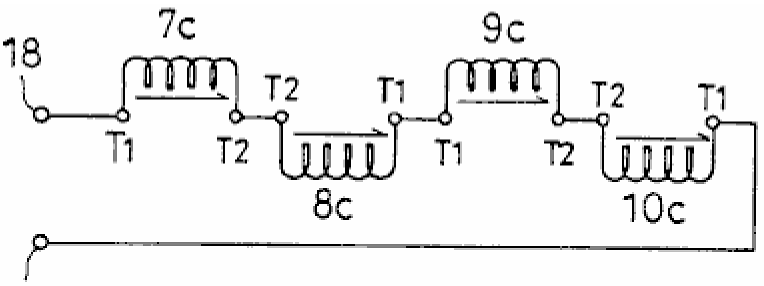

FIG. 5A

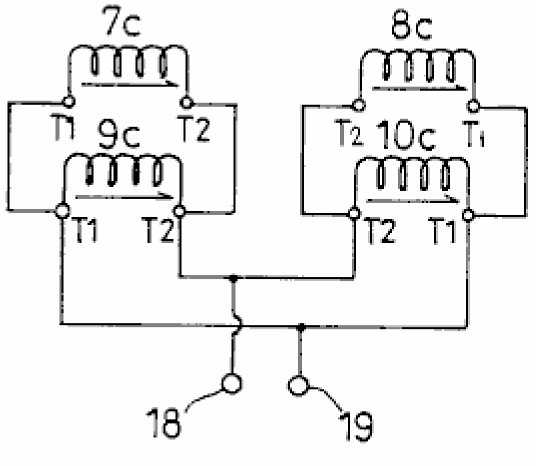

FIG. 5B

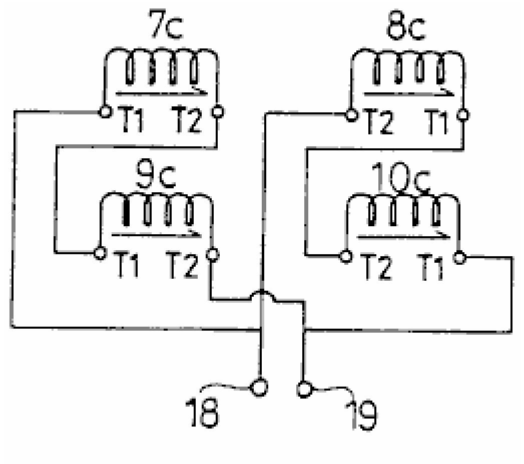

FIG. 5C

Fig.5A, **Fig.5B** and **Fig.5C**, show how the wirings are connected with each other. **T_1** indicates the beginning of a winding, **T_2** the end of a winding, and **18** and **19** output terminals. More specifically, **Fig.5A** shows a serial connection configuration, **Fig.5B** a serial-parallel connection configuration, and **Fig.5C** a parallel connection configuration. The serial connection configuration allows the electromotive force induced in the windings to be added together and provides a high-voltage output. The parallel connection configuration allows currents resulting from the electromotive force induced in the windings to be added together and provides a large-current output.

A description will now be given, with reference to **Fig.6A**, **Fig.6B** and **Fig.7**, of power generation operation of the serial connection configuration.

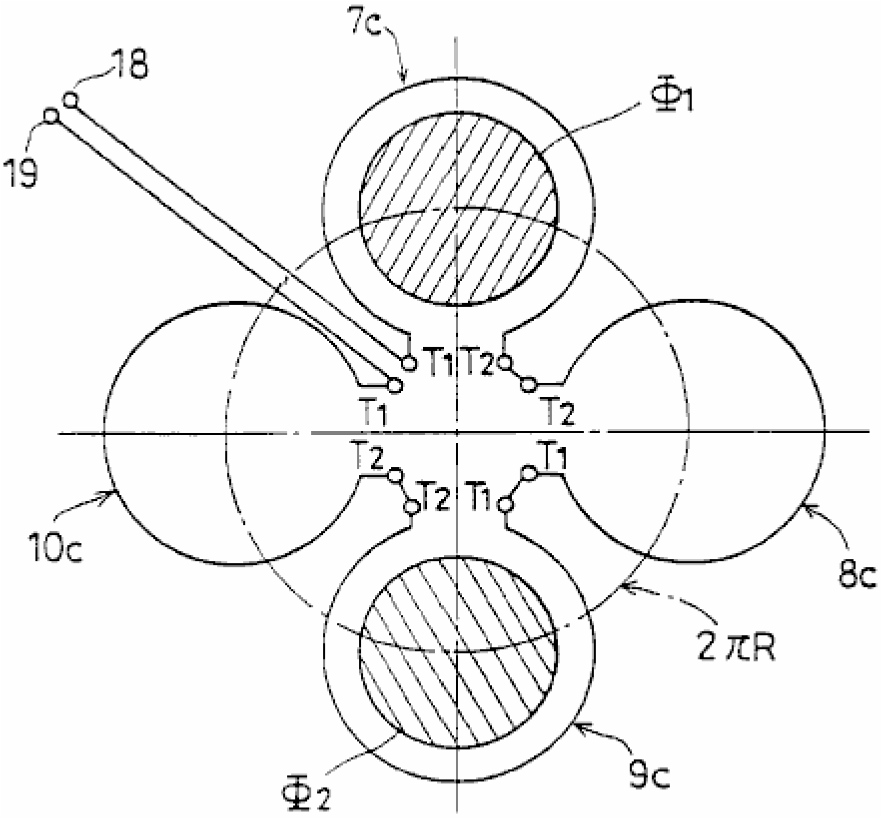

FIG. 6A

Fig.6A is a diagram showing schematically how the rotating magnetic field provided by the single-opposed-polarity rotors **11S** and **11N** crosses windings **7c-10c**. **Fig.6B** shows a magnetic path.

Referring to **Fig.6A**, **Phi_1** and **Phi_2** indicate rotating magnetic flux rotating along the circumference 2Pi x R. **Fig.6B** shows the arc-shaped magnets **12** and **15** directly opposite the stator core **7** over their entire length, and the arc-shaped magnets **13** and **16** directly opposite the stator core **9** over their entire length.

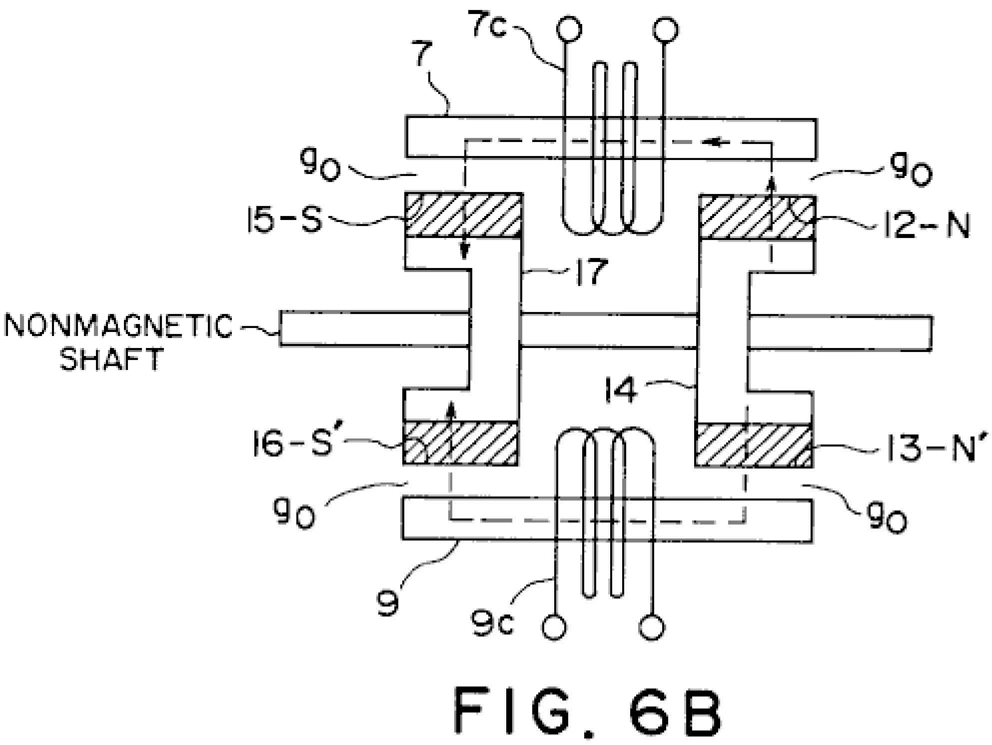

FIG. 6B

As shown in **Fig.6B**, the magnetic flux **Phi$_1$** forms a magnetic path as follows:

The rotor piece **14** (S) - the arc-shaped magnet pole **12** (N) - stator core **7** - the rotation gap **g$_0$** - the arc-shaped magnet **15** (S) - the rotor piece **17** (N).

The magnetic flux **Phi$_2$** forms a magnetic path as follows:

The rotor piece **14** (S) - the arc-shaped magnet **13** (N) - the rotation gap **g$_0$** - the stator core **9** - the rotation gap **g$_0$** - the arc-shaped magnet **16** (S) - the rotor piece **17** (N).

Thus, a parallel magnetic path is formed. In this state, the magnetic flux **Phi$_1$** crosses the winding **7c**, and the magnetic flux **Phi$_2$** crosses the winding **9c**.

A description focused on the rotation of the magnetic flux **Phi$_1$** is given. Specifically, a description will be given of a change in the way the magnetic flux **Phi$_1$** crosses the windings.

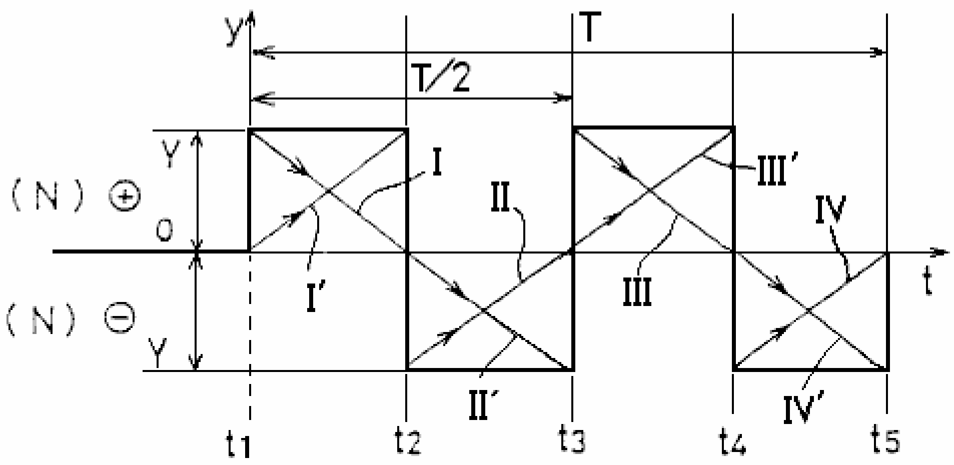

FIG. 7

Referring to a waveform of an output voltage shown in **Fig.7**, the entirety of the magnetic flux **Phi$_1$** crosses the winding **10c** at a time **t$_1$**. At a time **t$_2$**, the entirety of the magnetic flux **Phi$_1$** crosses the winding **7c**. At a time **t$_3$**, the entirety of the magnetic flux **Phi$_1$** crosses the winding **8c**. At a time **t$_4$**, the entirety of the magnetic flux **Phi$_1$** crosses the winding **9c**. At a time **t$_5$**, the entirety of the magnetic flux **Phi$_1$** crosses the winding **10c**. In this way, the magnetic flux **Phi$_1$** rotates at a constant speed during a time **T**, in a clockwise direction in **Fig.6A**.

Between the time **t$_1$** and the time **t$_2$**, an electromotive force having a descending triangular waveform, indicated by **I** in **Fig.7**, is generated in the winding **10c** due to a decrease in the number of magnetic flux lines of the magnetic flux **Phi** crossing the winding **10c**. An electromotive force having an ascending triangular waveform, indicated by **I'** in **Fig.6**, is generated in the winding **7c** due to an increase in the number of magnetic flux lines of the magnetic flux **Phi** crossing the winding **7c**. Accordingly, a positive rectangular waveform obtained by the sum of these triangular waveforms is output to the output terminals **18** and **19**.

Between the time **t$_2$** and the time **t$_3$**, an electromotive force having an ascending triangular waveform, indicated by **II** in **Fig.7**, is generated in the winding **7c** due to a decrease in the number of magnetic flux lines of the magnetic flux **Phi** crossing the winding **7c**. An electromotive force having a descending triangular waveform, indicated by **II'** in **Fig.7**, is generated in the winding **8c** due to an increase in the number of magnetic flux lines of the magnetic flux **Phi** crossing the winding **8c**. Accordingly, a negative rectangular waveform obtained by the sum of these triangular waveforms is output to the output terminals **18** and **19**.

Between the time **t$_3$** and the time **t$_4$**, an electromotive force having a descending triangular waveform, indicated by **III** in **Fig.7**, is generated in the winding **8c** due to a decrease in the number of magnetic flux lines of the magnetic flux **Phi** of the magnetic flux **Phi** crossing the winding **8c**. An electromotive force having an ascending triangular waveform, indicated by **III'** in **Fig.7**, is generated in the winding **9c** due to an increase in the number of magnetic flux lines of the magnetic flux **Phi** crossing the winding **9c**. Accordingly, a positive rectangular waveform obtained by the sum of these triangular waveforms is output to the output terminals **18** and **19**.

Between the time **t$_4$** and the time **t$_5$**, an electromotive force having an ascending triangular waveform, indicated by **IV** in **Fig.7**, is generated in the winding **9c** due to a decrease in the number of magnetic flux lines of the magnetic flux **Phi** crossing the winding **9c**. An electromotive force having a descending triangular waveform, indicated by **IV'** in **Fig.7**, is generated in the winding **10c** due to an increase in the number of magnetic flux lines of the magnetic flux **Phi** crossing the winding **10c**. Accordingly, a negative rectangular waveform obtained by the sum of these triangular waveforms is output to the output terminals **18** and **19**.

While the magnetic flux **Phi$_1$** makes one rotation, an electromotive force having a synthesised rectangular waveform and a period of **T/2** is output, as shown in **Fig.7**. Since the magnetic flux **Phi$_2$** also makes one rotation while the magnetic flux **Phi$_1$** makes one rotation and produces an output of an electromotive force having a similar rectangular waveform, the magnitude of the electromotive force obtained between the terminals **18** and **19** is actually double that indicated in **Fig.7**.

In this way, this embodiment makes it possible to cancel a counter magnetic field and provide an induction generator having a pair of magnetic poles of the same polarity opposed to each other with respect to a rotation shaft and characterised by a high energy conversion efficiency. Our operating practice has confirmed that the generator having the construction of this embodiment provides an energy conversion efficiency which is high enough to require only 1/5.2 of the driving torque for the conventional generator.

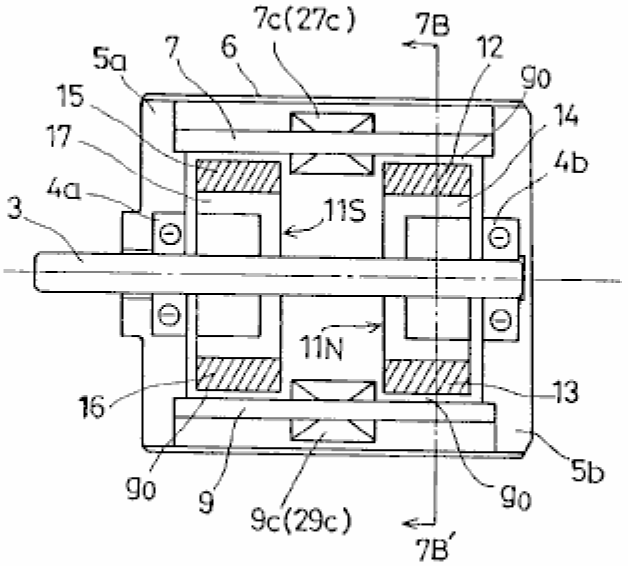

FIG. 8A

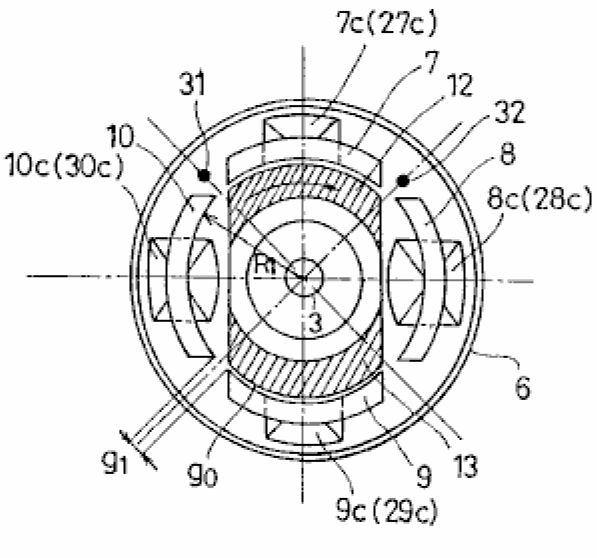

FIG. 8B

Fig.8A and **Fig.8B** show a second embodiment of the present invention. Specifically, **Fig.8A** is a longitudinal sectional view, and **Fig.8B** is a cross-sectional view taken in the line **7B-7B'** of **Fig.8A**.

Referring to **Fig.8A** and **Fig.8B**, **3** indicates a rotation shaft formed of a non-magnetic material and driven by an external source; **4a** and **4b** are bearings which support the rotation shaft **3**, **5a** and **5b** are flanges housing the bearings **4a** and **4b**, and **6** is a cylindrical case cover for accommodating the flanges **5a** and **5b**.

Stator cores **7**, **8**, **9** and **10** are arranged so as to encircle the rotation shaft **3**, equidistant gaps **g_1** being provided between the adjacent stator cores. Each of the stator cores **7**, **8**, **9** and **10** has a same arc-like cross section.

A single-opposed-polarity N-pole rotor **11N** and a single-opposed-polarity S-pole rotor **11S** are provided on the rotation shaft **3** so as to be opposite to each other. The single-opposed-polarity rotors **11N** and **11S** are surrounded by the stator cores **7**, **8**, **9** and **10** a small rotation gap **g_0** being provided between the single-opposed-polarity rotor and the stator core.

Referring to **Fig.8B**, windings **7c** and **9c** are provided clockwise around the stator cores **7** and **9**, respectively. Windings **27c** and **29c** are provided counterclockwise around the stator cores **7** and **9**, respectively. Windings **8c** and **10c** are provided counterclockwise in the stator cores **8** and **10**, respectively. Windings **28c** and 30c are wound clockwise around the stator cores 8 and 10, respectively. The windings 7c, 8c, 9c, 10c, **27c**, **28c**, **29c** and **30c** are connected with each other according to a configuration described later.

A magnetic sensor (for rotation position detection) **31** is provided between the stator cores **7** and **10**, and a magnetic sensor (for rotation position detection) **32** is provided between the stator cores **7** and **8**. The magnetic sensors **31** and **32** detect the magnetic field so as to determine the position of the single-opposed-polarity rotors **11N** and **11S** during their rotation.

The single-opposed-polarity rotors **11N** has a configuration as shown in **Fig.3A** and **Fig.3B**, and the monopole rotor **11S** has a configuration as shown in **Fig.4A** and **Fig.4B**.

The single-opposed-polarity rotor **11N** has arc-shaped magnets **12** and **13** which are 180^0 displaced from each other and are magnetised such that their surfaces facing the stator cores are N-poles while their respective inner surfaces are S-poles. The arc-shaped magnets **12** and **13** are configured to match the outline of the stator cores **7**, **8**, **9** and **10**.

A rotor piece **14** is positioned so as to connect the arc-shaped magnets **12** and **13**. The rotor piece **14** is constructed from a low-carbon steel having several percent of non-ferrous metal, using a forging-cast process. The iron core rotor piece **14** constructed by this means, has a well-balanced magnetic field where the permeability approximates a peak value in a unipolar magnetic field that the iron core presents to its surroundings.

The single-opposed-polarity rotor **11S** has arc-shaped magnets **15** and **16** which are positioned 180^0 apart from each other and are magnetised so that their surfaces which face the stator cores are S-poles while their inner surfaces are N-poles. The arc-shaped magnets **15** and **16** are shaped and positioned so as to match the outline of the stator cores **7**, **8**, **9** and **10**.

A rotor piece **17** is positioned so as to connect the arc-shaped magnets **15** and **16**. The rotor piece **17** is constructed from a low-carbon steel having several percent of non-ferrous metal, using a forging-cast process. The iron core rotor piece **17** constructed by this means, has a well-balanced magnetic field where the permeability approximates a peak value in a unipolar magnetic field which the iron core presents to its surroundings.

The arc-shaped magnets **12**, **13**, **15** and **16** have the same circumferential lengths, which is equal to the length of the arc formed by the circumference of the stator cores **7**, **8**, **9** and **10**. More specifically, this length is obtained by dividing by four, the entire hypothetical circumference minus the four gaps $\mathbf{g_1}$. Referring to **Figs. 3A, 3B, 4A, 4B** and **8**, the rotation gap $\mathbf{g_0}$ is equal to $\mathbf{R_1 - R}$.

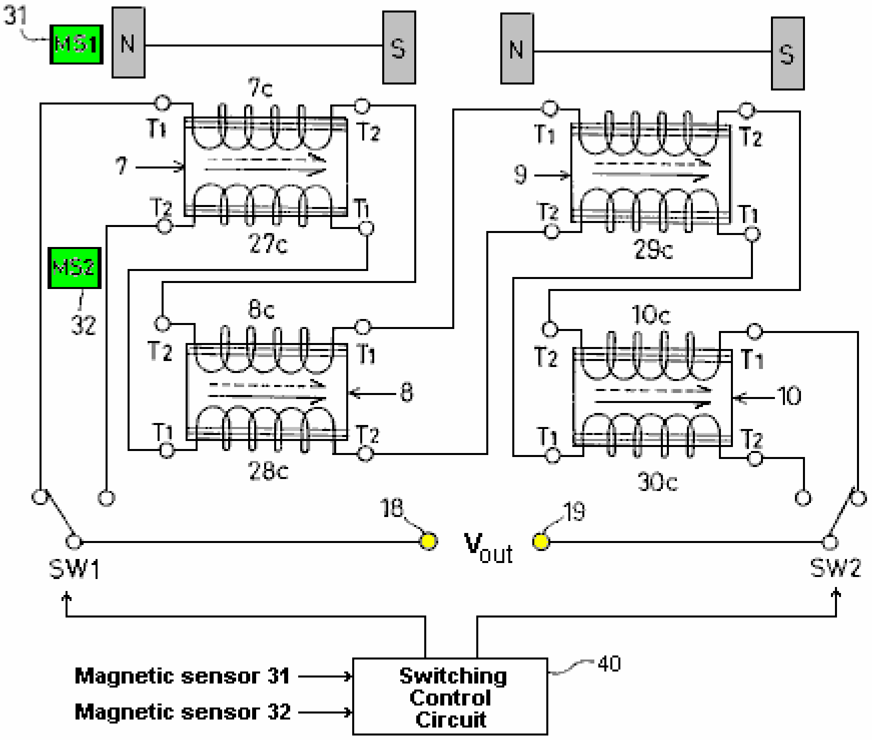

FIG. 9

Fig.9 shows how the wirings are connected with each other. $\mathbf{T_1}$ indicates the beginning of a winding, $\mathbf{T_2}$ the end of a winding, and **18** and **19** are the output terminals.

Two serial circuits are formed out of the windings. Switches **SW1** and **SW2** are used for selection of the respective serial circuits. A switching control circuit **40**, which processes a detection signal from the magnetic sensors **31** and **32**, drives the switches SW1 and SW2 selectively in accordance with the detection signal.

As shown in **Fig.9**, the first serial circuit comprises the winding **7c** provided clockwise in the stator core **7**, the winding **8c** serially connected with the winding **7c** and provided counterclockwise in the stator core **8** adjacent to the stator core **7**; the winding **9c** serially connected with the winding **8c** and provided clockwise in the stator core **9**; and the winding **10c** serially connected with the winding **9c** and provided counterclockwise in the stator core **10** adjacent to the stator core **9**.

As shown in **Fig.9**, the second serial circuit comprises the winding **27c** provided counterclockwise in the stator core **7**; the winding **28c** serially connected with the winding **27c** and provided clockwise in the stator core **8**; the winding **29c** serially connected with the winding **28c** and provided counterclockwise in the stator core **9**; and the winding **30c** serially connected with the winding **29c** and provided clockwise in the stator core **10**.

According to the construction described above, a rotating magnetic field which causes electromagnetic induction in the stator cores **7-10** successively is created by the arc-shaped magnets **12**, **13**, **15** and **16** when the single-opposed-polarity rotors **11N** and **11S** are rotated. As has been already explained with reference to **Fig.6A**, **Fig.6B** and **Fig.7**, as the magnetic flux lines crossing one of the windings **7c-10c** increase in number, the magnetic flux lines crossing the adjacent one of the windings **7c-10c** decrease in number. That is, the magnetic flux lines periodically increase and decrease with respect to a given winding so that a first electromotive force, having a rectangular waveform similar to the one shown in **Fig.7** and a period that is 1/2 the period of the rotation, is output from the first serial circuit (**7c-10c**).

As the magnetic flux lines crossing one of the windings **27c-30c** increase in number, the magnetic flux lines crossing the adjacent one of the windings **27c-30c** decrease in number. That is, the magnetic flux lines periodically increase and decrease with respect to a given winding so that a second electromotive force of a rectangular waveform 180^0 out of phase with the first electromotive force and having the same period as the first electromotive force is output from the second serial circuit (**27c-30c**). That is, the second electromotive force is 180^0 out of phase with the electromotive force shown in **Fig.7**.

Referring to **Fig.10**, in accordance with the detection signal from the magnetic sensors **31** and **32**, the switches **SW1** and **SW2** effect switching at 90^0 intervals. By that means, the positive components **I** and **III** of the first electromotive force having a rectangular waveform and provided from the first serial circuit, and the positive components **II** and **IV** of the second electromotive force having a rectangular waveform and provided from the second serial circuit are alternately selected at 180^0 intervals and output to the output terminals **18** and **19**.

This means that, this embodiment ensures a high-efficiency energy conversion wherein a counter magnetic field is cancelled, and a DC electromotive force having a positive level is properly synthesised and output. It is of course possible to synthesise and output a negative DC electromotive force by shifting the switching timing by 180^0.

INDUSTRIAL APPLICABILITY

As has been described, according to the present invention, the rotation of the first and second single-opposed-polarity rotors generates a rotating magnetic field which causes an induction in an even number of stator cores successively. As the magnetic flux lines crossing one of the first-through-fourth windings increase in number, the magnetic flux lines crossing the adjacent one of the first-through-fourth windings decrease in number. That is, the magnetic flux lines periodically increase and decrease with respect to a given winding. The electromotive force generated as the magnetic flux lines crossing a winding increase in number and the electromotive force generated as the magnetic flux lines crossing an adjacent winding decrease in number are synthesised so that a periodic AC electromotive force having a rectangular waveform is generated out of the synthesis and output. In this way, a high-efficiency energy conversion wherein a counter magnetic field is cancelled is provided.

According to the first serial circuit of the present invention, the rotation of the first and second single-opposed-polarity rotors generates a rotating magnetic field which causes an induction in an even number of stator cores successively. As the magnetic flux lines crossing one of the first through fourth windings increase in number, the magnetic flux lines crossing the adjacent one of the first through fourth windings decrease in number. That is, the magnetic flux lines periodically increase and decrease in a given winding. Accordingly, the first electromotive force having a rectangular waveform is output. According to the second serial circuit, as the magnetic flux lines crossing one of the fifth-through-eighth windings increase in number, the magnetic flux lines crossing the adjacent one of the fifth-through-eighth windings decrease in number. That is, the magnetic flux lines periodically increase and decrease in a given winding. Accordingly, the second electromotive force 180^0 out of phase with the first electromotive force and having the same period as the first electromotive force is output. In accordance with the detection signal from the rotation position detecting means, the switching means selectively causes the positive components of the first electromotive force provided by the first serial circuit, or the positive components of the second electromotive force provided by the second serial circuit to be output at 180^0 intervals. In this way the DC electromotive force is synthesised and output. This results in a high-efficiency energy conversion where a counter magnetic field is cancelled.

In addition to extensive applications in power plants, ships, aircraft etc., the present invention may find household applications or may be conveniently adapted for leisure uses.

CLAIMS

1. An induction generator having a pair of magnetic poles of the same polarity opposed to each other with respect to a rotation shaft, characterised by comprising:

a rotation shaft driven by external means;

an even number of (more than three) stator cores provided to encircle said rotation shaft, predetermined gaps being provided between the adjacent stator cores;

a first single-opposed-polarity rotor provided on said rotation shaft, surrounded by said even number of stator cores, and having first and second magnets magnetised such that said even number of stator cores remain facing a first polarity, said first and second magnets sandwiching a magnetic body between them and being opposed to each other with respect to said rotation shaft in a cross section;

a second single-opposed-polarity rotor provided on said rotation shaft so as to face said first single-opposed-polarity rotor at a predetermined distance along the rotation shaft, surrounded by said even number of stator cores, and having third and fourth magnets magnetised such that said even number of stator cores remain facing a second polarity which is opposite to the polarity of said first polarity, said third and fourth magnets sandwiching a magnetic body between them and being disposed opposite to each other with respect to said rotation shaft;

a plurality of windings provided in said even number of stator cores and connected according to a predetermined configuration, characterised in that: a rotating magnetic field which causes electromagnetic induction in said even number of stator cores successively is created by the first, second, third and fourth magnets when said first and second single-opposed-polarity rotors are rotated; and

two windings adjacent to each other are wound in opposite directions and connected in series so that a rectangular waveform is formed by synthesising the electromotive forces generated by the two windings, so that an electromotive force having a triangular waveform caused by periodic increase and decrease in the number of magnetic flux lines crossing one of the two windings and another electromotive force having a triangular waveform caused by associated periodic decrease and increase in the number of magnetic flux lines crossing the other one of the windings are synthesised so as to generate a periodic voltage having a rectangular waveform.

2. The induction generator having a pair of magnets of the same polarity opposed to each other with respect to a rotation shaft as claimed in claim 1, characterised in that:

said plurality of windings connected according to the predetermined configuration form first and second serial circuits;

said first serial circuit outputs a periodic first electromotive force having a rectangular waveform when a rotating magnetic field which causes electromagnetic induction in said even number of stator cores successively is created by said first, second, third and fourth magnets when said first and second single-opposed-polarity rotors are rotated; and

said second serial circuit outputs a periodic second electromotive force of a rectangular waveform 180^0 out of phase with the first electromotive force and having the same period as the first electromotive force, when a rotating magnetic field which causes electromagnetic induction in said even number of stator cores successively is created by said first and second single-opposed-polarity rotors are rotated.

3. The induction generator having a pair of magnets of the same polarity opposed to each other with respect to a rotation shaft as claimed in claim 2, further comprising:

rotation position detecting means for detecting a position of said first and second single-opposed-polarity rotors during their rotation; and

switching means which alternately causes positive components of said first electromotive force having a rectangular waveform and provided by said first serial circuit, or positive components of said second electromotive force having a rectangular waveform and provided by said second serial circuit to be output at intervals of an electrical angle of 180^0 to thereby produce a DC output.

4. The induction generator having a pair of magnets of the same polarity opposed to each other with respect to a rotation shaft as claimed in claim 1, characterised in that:

said plurality of windings comprise a first winding provided in a first stator core of said even number of stator cores, a second winding provided in a second stator core adjacent to the first stator core so as to wind in a direction opposite to a direction in which the first winding is provided, a third winding provided in a third stator core adjacent to the second stator core so as to wind in the same direction as the first winding, a fourth winding provided in a fourth stator core adjacent to the third stator core so as to wind in a direction opposite to a direction in which the third winding is provided, the first through fourth windings being connected with each other according to a predetermined configuration.

5. The induction generator having a pair of magnets of the same polarity opposed to each other with respect to a rotation shaft as claimed in claim 2, characterised in that:

said first serial circuit comprise a first winding provided to wind in a first direction in a first stator core of said even number of stator cores, a second winding serially connected to said first winding and provided in a second stator core adjacent to the first stator core so as to wind in a second direction opposite to the first direction, a third winding serially connected with said second winding and provided in a third stator core adjacent to the second stator core so as to wind in the first direction, a fourth winding serially connected to said third winding and provided in a fourth stator core adjacent to the third stator core so as to wind in the second direction; and

said second serial circuit comprises a fifth winding provided to wind in the second direction in said first stator core, a sixth winding serially connected to said fifth winding and provided in said second stator core so as to wind in said first direction, a seventh winding serially connected with said sixth winding and provided in said third stator core so as to wind in said second direction, an eighth winding serially connected to said seventh winding and provided in said fourth stator core so as to wind in said first direction.

6. The induction generator having a pair of magnets of the same polarity opposed to each other with respect to a rotation shaft as claimed in claim 1, characterised in that:

said first through fourth magnets are arc-shaped; and

said even number of stator cores have arc-shaped cross sections.

7. The induction generator having a pair of magnets of the same polarity opposed to each other with respect to a rotation shaft as claimed in claim 6, characterised in that said arc-shaped first through fourth magnets and said stator cores which have arc-shaped cross sections have an almost identical circumferential length.

8. The induction generator having a pair of magnets of the same polarity opposed to each other with respect to a rotation shaft as claimed in claim 2, characterised in that:

said first through fourth magnets are arc-shaped; and

said even number of stator cores have arc-shaped cross sections.

9. The induction generator having a pair of magnets of the same polarity opposed to each other with respect to a rotation shaft as claimed in claim 3, characterised in that:

said first through fourth magnets are arc-shaped; and

said even number of stator cores have arc-shaped cross sections.

10. The induction generator having a pair of magnets of the same polarity opposed to each other with respect to a rotation shaft as claimed in claim 4, characterised in that:

said first through fourth magnets are arc-shaped; and

said even number of stator cores have arc-shaped cross sections.

11. The induction generator having a pair of magnetic poles of the same polarity opposed to each other with respect to a rotation shaft as claimed in claim 5, characterised in that:

said first through fourth magnets are arc-shaped; and

said even number of stator cores have arc-shaped cross sections.

12. The induction generator having a pair of magnetic poles of the same polarity opposed to each other with respect to a rotation shaft as claimed in claim 8, characterised in that said arc-shaped first through fourth magnets and said stator cores which have arc-shaped cross sections have an almost identical circumferential length.

13. The induction generator having a pair of magnetic poles of the same polarity opposed to each other with respect to a rotation shaft as claimed in claim 9, characterised in that said arc-shaped first through fourth magnets and said stator cores which have arc-shaped cross sections have an almost identical circumferential length.

14. The induction generator having a pair of magnetic poles of the same polarity opposed to each other with respect to a rotation shaft as claimed in claim 10, characterised in that said arc-shaped first through fourth magnets and said stator cores which have arc-shaped cross sections have an almost identical circumferential length.

15. The induction generator having a pair of magnetic poles of the same polarity opposed to each other with respect to a rotation shaft as claimed in claim 11, characterised in that said arc-shaped first through fourth magnets and said stator cores which have arc-shaped cross sections have an almost identical circumferential length.

Patent Application EU 82,400,992.2   22nd December 1982   Inventor: Larry T. Jamison

ENERGY SOURCE EMPLOYING ELECTRICAL ENERGISER

This patent application shows the details of a device which it is claimed, can produce electricity without the need for any fuel. It should be noted that while construction details are provided which imply that the inventor constructed and tested several of these devices, this is only an application and not a granted patent.

ABSTRACT

An energy producing system is provided which produces energy for use, for example, in an electric vehicle or in a home power plant. The system includes an electrical energiser (**60**) including a double-wound rotor and a double-wound stator, for producing electrical energy which is stored in the system, e.g. in a battery (**66**) storage arrangement, which provides initial energisation of the system. the stored energy is supplied to an electric motor (**68**) which drives the energiser (**60**) to thereby create additional energy. the energiser is able to supply the needs of the system as well as to power a load.

BACKGROUND OF THE INVENTION

The present invention relates to energy producing systems and, more particularly, to an electrical energiser-motor system for providing energy, e.g., for an automotive vehicle or as part of a home energy plant.

With the advent of the so-called “energy crisis” and the consequent search for alternative energy sources to substitute for oil, considerable attention has been focused on automotive vehicles as chief users of oil products. One aspect of this search has fostered renewed interest in electrically driven vehicles such as electric cars and the like. A principal shortcoming of prior-art electrical vehicles has been the need to recharge the batteries which provide the power for the electrical motor drive system.

The present invention overcomes this problem through the provision of an electrical energiser-motor system which produces more energy than is expended, thereby enabling the excess energy to be stored in the battery system, to be drawn upon as required. Thus, the need for recharging of the batteries associated with conventional electrical vehicles is eliminated with the system of this invention. It should be noted that while the system of the invention has enormous potential in connection with its use in electrical vehicles, the system is clearly not limited to such use and would obviously be advantageous when used, for example, as the energy source for a home energy plant, as well as in many other applications.

In accordance with the invention, and energy producing system of the type described above is provided which comprises and electrical “energiser” comprising at least one double-wound stator and at least one double-wound shaft-mounted rotor located within a housing, electrical energy being collected from the rotor through a suitable electrical take-off device and being available for utilisation by the system, and an electric motor, powered by the energiser for driving the rotor shaft of the energiser. A battery arrangement is initially used to supply energy to the system and, as stated above, the excess energy generated by the energiser over and above that required by the system and the system load, is stored through charging of the batteries. The motor includes an armature with a plurality of winding slots in it and a plurality of windings being wound into two circumferentially spaced slots in the armature, i.e. such a winding is wound through a first slot (e.g. slot 1) and returned through a second spaced slot (e.g. slot 5). depending on the energy demands, the energiser may include a pair of stators and rotors, with the rotors being mounted on a common shaft. The motor is preferably energised through an arrangement of a commutator and plural brushes, while a slip ring and associated brushes connected to an output bridge circuit form the energy take-off for the energiser.

Other features and advantages of the invention will be shown in the detailed description of the preferred embodiments which follows.

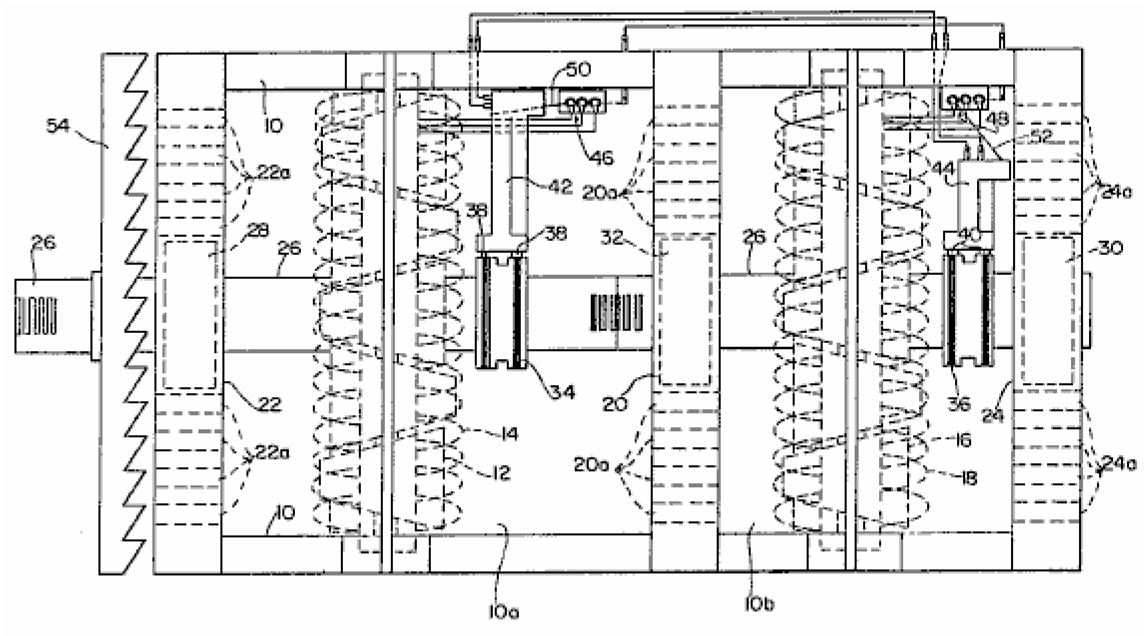

FIG. 1

Fig.1 is a partially sectioned elevational view of the electrical “energiser” of the invention.

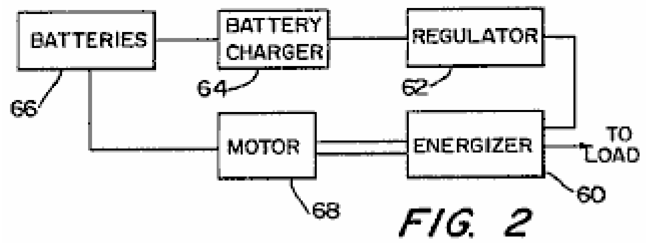

FIG. 2

Fig.2 is a block diagram of the overall energy-producing system of the invention

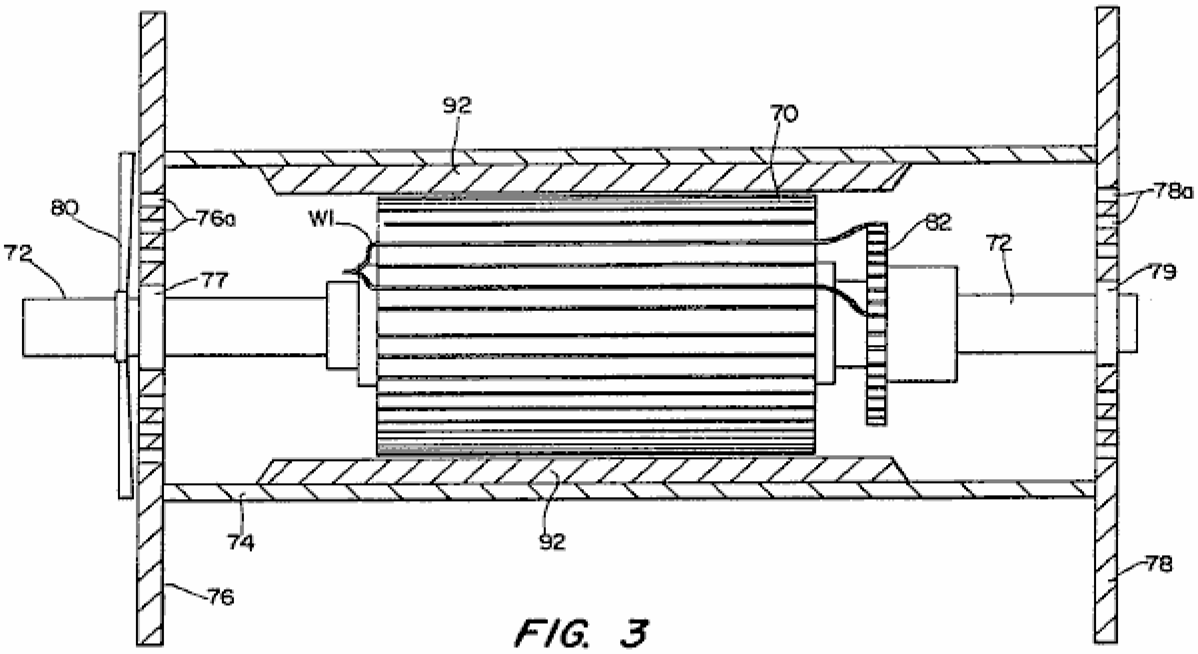

FIG. 3

Fig.3 is a partially sectioned side elevational view of a modified electrical motor constructed in accordance with the invention.

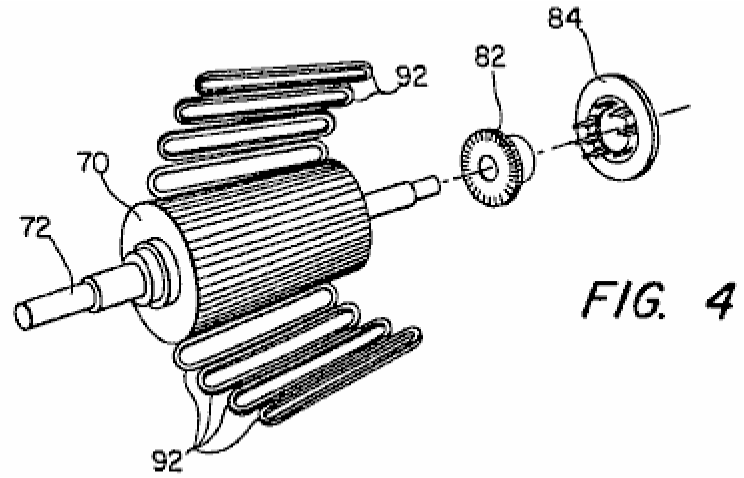

FIG. 4

Fig.4 is an exploded perspective view of the basic components of the motor of **Fig.3**.

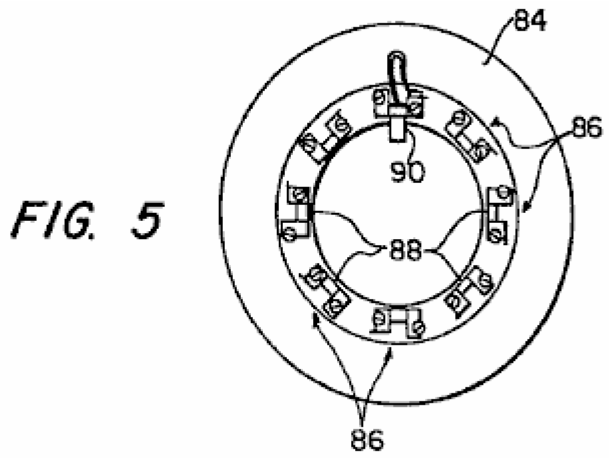

FIG. 5

Fig.5 is an end view of the brush holder also illustrated in **Fig.4**.

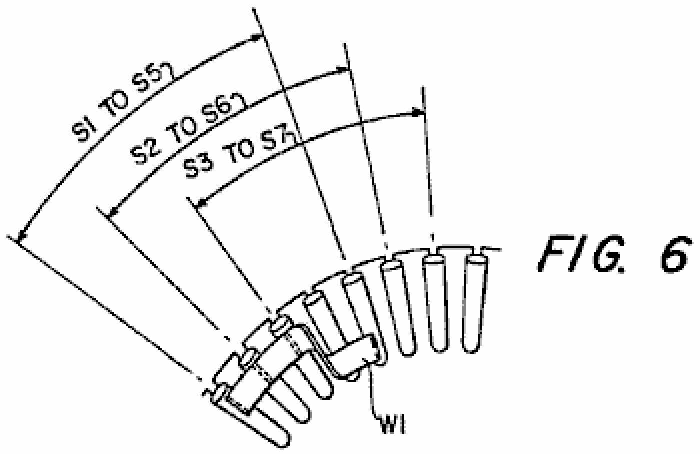

FIG. 6

Fig.6 and **Fig.7** show details of the winding pattern of the motor of **Fig.3**.

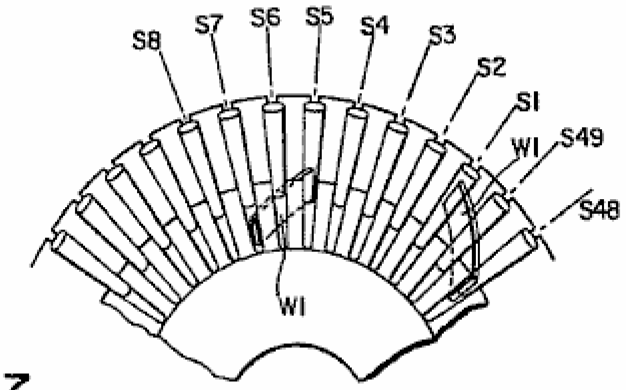

FIG. 7

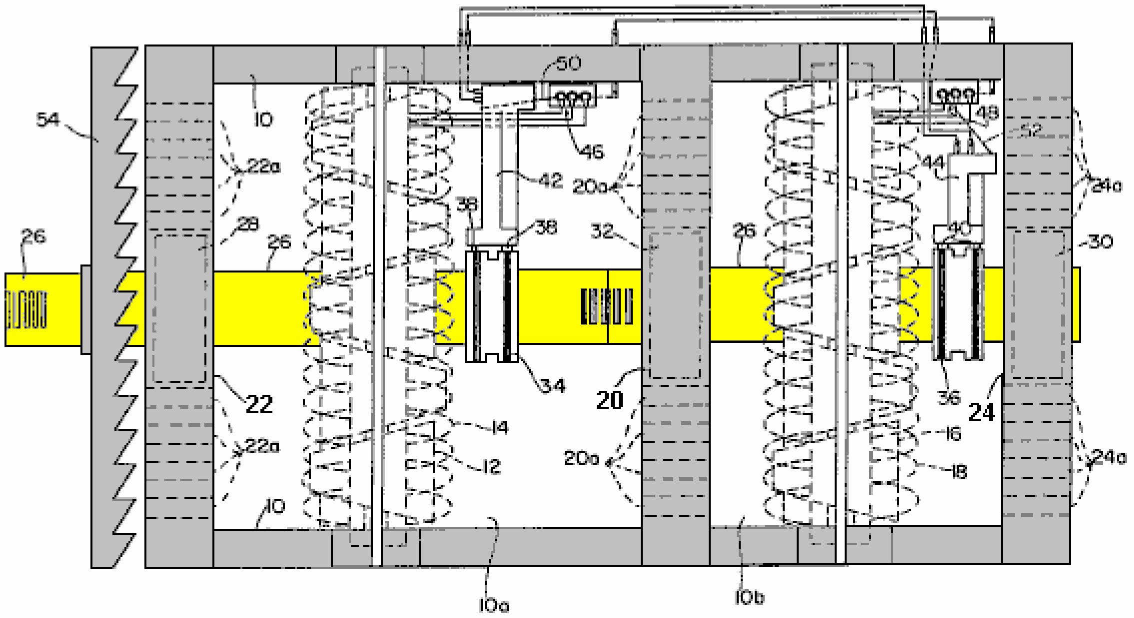

FIG. 1

Referring to **Fig.1**, a preferred embodiment of the “energiser” device of the invention is shown. The device includes a housing **10**, in which are located, in a first chamber or compartment **10a**, a first rotor **12** and a first stator **14** and, in a second compartment **10b**, a second rotor **16**, and a second stator **18**. It should be noted that although two stator-rotor combinations are used in this embodiment, a single stator-rotor combination can be used for some applications. Housing **10** is divided into the compartments **10a** and **10b**, by a centre plate **20** and it includes a pair of end plates **22** and **24**. Both the rotors **12**, **16** and the stators **14**, **18** are double wound and the rotors **12**, **16** are nested inside their respective stators **14** and **18** and mounted for rotation on a common shaft **26**. Shaft **26** extends longitudinally through housing **10** and is mounted on bearings **28** and **30**, supported by end plates **22** and **24**, and a further bearing **32** which is supported by central plate **20**.

A pair of slip rings **34** and **36**, are mounted on shaft **26** and connect with their corresponding brush pairs **38** and **40**.
Slip rings **34** and **36** are connected to rotors **12** and **16** respectively, and permit the current flowing in the rotor windings to be collected through the associated pairs of brushes **38** and **40**. Brush pairs **38** and **40** are mounted on respective brush holders **42** and **44**. The terminals of respective bridge circuits **46** and **48** are connected to stators **14** and **18**, while conversion bars 50 and 52 are connected to brush holders **42** and **44**, as indicated.

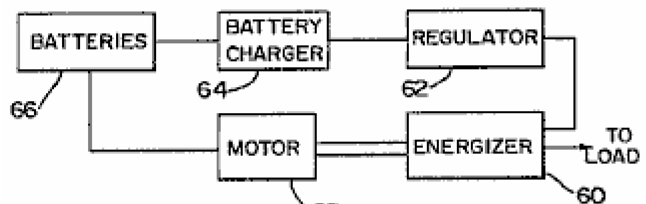

FIG. 2

A cooling fan **54**, is also mounted on shaft **26** and a plurality of apertures **201**, **22a** and **24a** are provided in centre plate **20** and end plates **22** and **24**, to promote cooling of the device. The energiser of **Fig.1** is preferably incorporated in a system such as shown in a highly schematic manner in **Fig.2** where the output of the energiser is used to supply the energy for driving a motor. To this end, the energiser, which is denoted by **60** in **Fig.2**, is connected through a regulator **62**, to battery charger **64** for batteries **66** connected to a motor **68**. These batteries **66** are used to provide the initial energisation of the system as well as to store energy produced by the energiser **60**. It will be understood that the energiser **60** provides energy enough to power motor **68** (which, in turn, drives energiser **60** through rotation of shaft **26**) as well as to provide storage for energy in the system. It will also be appreciated that the system illustrated schematically in **Fig.2** includes suitable controls (switches, rheostats, sensors, etc.) to provide initial energisation as well as appropriate operational control of the system.

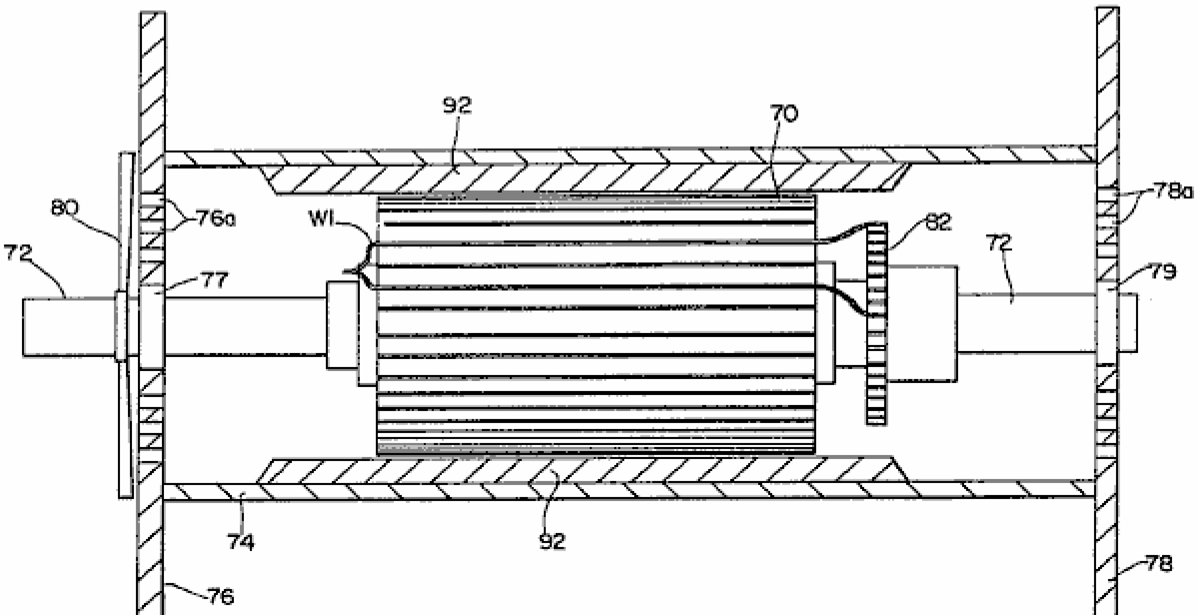

FIG. 3

In a preferred embodiment, motor **68** is of the form shown in **Fig.3**. As illustrated, the motor is of a generally conventional form (with exceptions noted below) and comprises an armature **70**, mounted on a shaft **72** within housing **74**. Housing **74** includes a pair of end plates **76** and **78**, which mount shaft bearings **77** and **79**. Apertures **76a** and **78a** are provided in end plates **76** and **78** and a cooling fan **80** is mounted on shaft **72** to provide cooling.

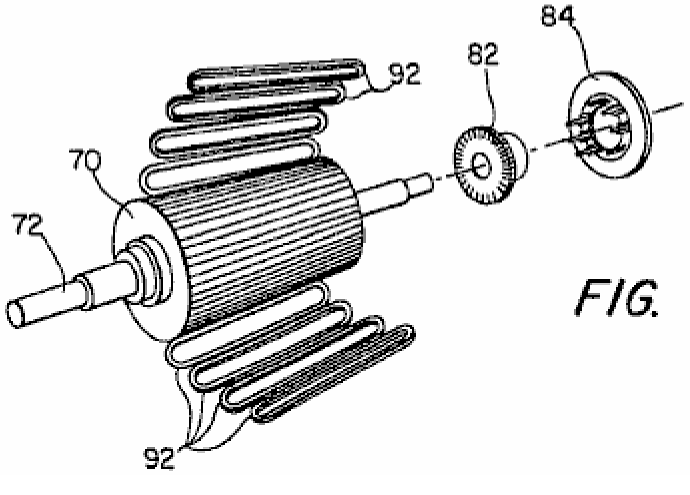

FIG. 4

A commutator **82** is also mounted on shaft **72**, and co-operates with associated brushes (not shown in **Fig.1**), to conduct current to the windings of armature **70**. This co-operation is shown best in **Fig.4** which is an exploded view, illustrating the armature **70**, commutator **82** and a brush holder **84**.

FIG. 5

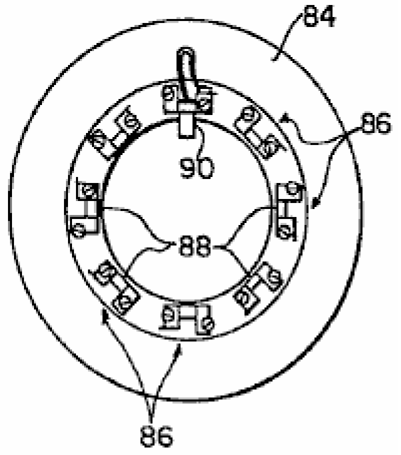

As shown in **Fig.5**, the brush holder **84** includes eight brush mounts **86**, each of which defines a slot **88** in which a pair of brushes is mounted. One brush **90** is shown in **Fig.5**, it being understood that two such brushes are mounted in each slot **88** so that sixteen brushes are required.

The motor of **Fig.3** to **Fig.6** includes eight pole shoes (not shown) which are secured to housing **74** and which serve to mount eight field coils or windings **92** (see **Fig.3** and **Fig.4**) spaced out around the periphery of armature **72**.

An important feature of the motor of **Fig.3** to **Fig.6** concerns the manner in which the windings for armature **70** are wound. As illustrated in **Fig.3**, **Fig.6** and **Fig.7**, a typical winding **W1** is wound in two slots, with the illustrated winding being doubled back and continuing from armature slot **S1** to armature slot **S5** (see **Fig.3** and **Fig.6**). Similarly, the winding in slot **S2** continues to slot **S6**, the winding of slot **S3** continues to slot **S7**, and so on for the forty-nine windings.

In a specific preferred embodiment, the motor described above is a 48-volt, 412 horsepower motor having a top operating speed of 7,000 rpm. A rheostat control (not shown) is used to control the input voltage and, as discussed above, the motor is powered from the energiser of **Fig.1**. It will be appreciated that the energy take-off from the system is preferably from the output shaft of the motor, although the electrical energy may also be tapped off from the energiser output.

Although the invention has been described in relation to exemplary embodiments, it will be understood by those skilled in the art, that variations and modifications can be effected in these embodiments without departing from the scope and spirit of the invention.

CLAIMS

1. An energy-producing system providing an output for utilisation by a utilising device, the system comprising:

> An electrical energising means comprising a housing (**10**); at least one double-wound stator (**14** or **18**) located within the housing; at least one double-wound rotor (**12** or **16**) located within the housing; a rotor shaft (**26**), supported in the housing, and on which the double-wound rotor is mounted; and an energy take-off mechanism (**34** or **36**) including a mechanism for collecting electrical energy from the rotor, mounted on the shaft and connected to the rotor, the mechanism having at least one stationary output.
>
> A motor (**68**), including a connection to the electrical energiser through which to draw the power to operate the motor and drive the rotor shaft of the energiser, the motor having an armature (**70**) with a plurality of winding slots (**S1** to **S49**) in it, and a plurality of windings (**W1**) wound in those slots, at least some of the windings being wound in two slots spaced out around the circumference of the armature (for example, **S1** and **S5**), and an energy supply mechanism (**66**) for supplying electrical energy to the motor at least during initial energisation of the motor, and connected to the energiser for supplying energy to the motor during its operation.

2. A system as in Claim 1, where the energiser includes a pair of these rotors (**12**, **16**) and a pair of stators (**14**, **18**), the rotors being mounted on a common shaft (**26**).

3. A system as in Claim 1, where the energy take-off includes a slip ring (**34** or **36**) and at least one brush (**38** or **40**) for collecting electrical current from the rotor windings, the brush being connected to a bridge circuit (**46** or **48**).

4. A system as in Claim 1, where the motor contains a commutator (**82**) through which energy is supplied to the armature windings.

5. A system as in Claim 4, where the same winding (W1) is wound in the first and fifth slot positions of the motor armature, and the ends of that winding are connected to two positions spaced out around the circumference of the commutator (see **Fig.3**).

United States Patent 5,436,518 25th July 1995 Inventor: Teruo Kawai

MOTIVE POWER-GENERATING DEVICE

Please note that this is a re-worded excerpt from this patent. It describes a motor which has an output power greater than its input power.

SUMMARY OF THE INVENTION

It is an object of the invention to provide a motive power generation device in which the occurrence of a force acting in a direction opposite to the direction of movement of a rotor and/or a stator is prevented, so as to permit efficient use of electric energy to be applied to electromagnets, as well as magnetic energy generated by a permanent magnet.

In order to achieve the above object, the first invention comprises a permanent magnet disposed around a rotational output shaft which is mounted on a bearing, a magnetic body positioned concentrically with the permanent magnet for rotation with the output shaft, the magnetic body being subjected to the magnetic flux of the permanent magnet, a plurality of electromagnets permanently mounted on the support member so that they are spaced a predetermined distance around the periphery of the magnetic material, each magnetic circuit of the electromagnets being independent of one another and the excitation change-over mechanism of the electromagnets which can sequentially magnetise one of the electromagnets which is positioned forward, with regard to a rotational direction, of the output shaft, so as to impart to the electromagnet a magnetic polarity magnetically opposite to that of the magnetic pole of the permanent magnet, whereby a magnetic flux passing through the magnetic body converges in one direction thereby applying a rotational torque to the output shaft.

According to the first invention, when one of the electromagnets which is positioned ahead in the rotational direction of the rotational output shaft, a magnetic field created by the excited electromagnet and a magnetic field created by the permanent magnet interact with each other. Thus, the magnetic flux passing through the magnetic body converges toward the exited electromagnet, so as to rotate the rotational output shaft by a predetermined angle toward the excited electromagnet. When the rotational output shaft has been rotated by the predetermined angle, the above excited electromagnet is de-magnetised, and another electromagnet currently positioned ahead with respect to the rotational direction of the rotor output shaft is excited or magnetised. Sequential excitation of the electromagnets in the above manner permits rotation of the output shaft in a predetermined direction. In this regard, it should be noted that the electromagnets are excited so as to have a magnetic polarity opposite to that of the magnetic pole of the permanent magnet and that the magnetic circuit of the excited electromagnets is independent from those of adjacent electromagnets. Thus, the magnetic flux generated by the excited electromagnet is prevented from passing through magnetic circuits of adjacent electromagnets, which, if it occurs, might cause the electromagnets to be magnetised to have the same polarity as that of the magnetic pole of the permanent magnet. Accordingly, no objectionable force will be generated which might interfere with rotation of the output shaft.

In order to achieve the above object, the second invention comprises a permanent magnet mounted on a movable body arranged movably along a linear track, a magnetic body mounted on the permanent magnet, the magnetic body being subjected to a magnetic flux of the permanent magnet, a plurality of electromagnets spaced an appropriate distance along the linear track, the electromagnets having magnetic circuits which are independent of one another and the excitation mechanism arranged to magnetise each of the electromagnets sequentially when each is positioned forward of the movable body, (with respect to the direction of movement) so as to impart to the excited electromagnet a magnetic polarity opposite to that of the magnetic pole of the permanent magnet, whereby a magnetic flux passing through the magnetic body converges in a predetermined direction so as to cause linear movement of the movable body.

According to the second invention, when the electromagnet positioned ahead of the forward end of the movable body with regard to the direction of the movement of the movable body is excited, a magnetic field generated by the excited electromagnet and magnetic field generated by the permanent magnet interact with each other. Thus, a magnetic flux passing through the magnetic body converges toward the excited electromagnet, so as to displace the movable body a predetermined distance toward the excited electromagnet. When the movable body has been moved the predetermined distance, the movable body is positioned below the above excited electromagnet, and another electromagnet is positioned ahead of the forward end of the movable body. When this occurs, excitation of the electromagnet positioned above the movable body is interrupted, and excitation of the electromagnet now positioned ahead of the forward end of the movable body is initiated. Sequential excitation of the electromagnets in the above manner permits movement of the movable body in a predetermined direction It should be noted that no objectionable force which would interfere with movement of the movable body is created for the same reason as that explained in relation to the first invention.

BRIEF DESCRIPTION OF THE DRAWINGS

Fig.1 is a front elevational view, partly in section and partly omitted, of a motor according to a first embodiment of the invention;

Fig. 1

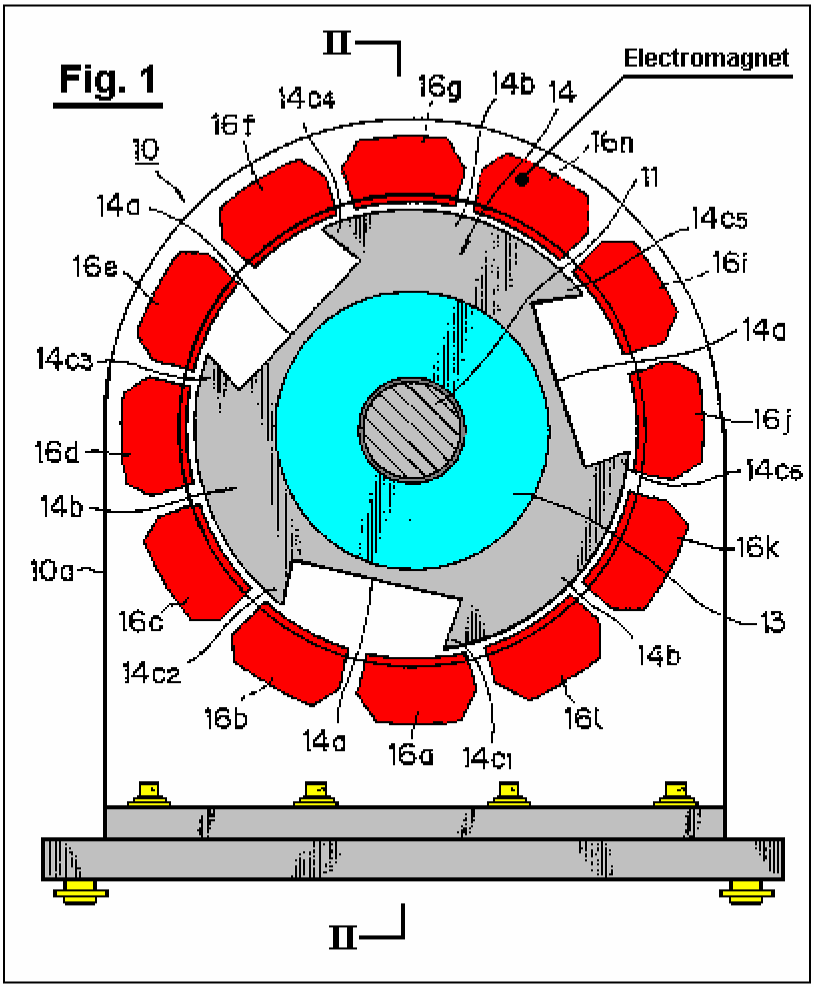

Fig.2 is a sectional view along line II--II in **Fig.1**;

Fig. 2

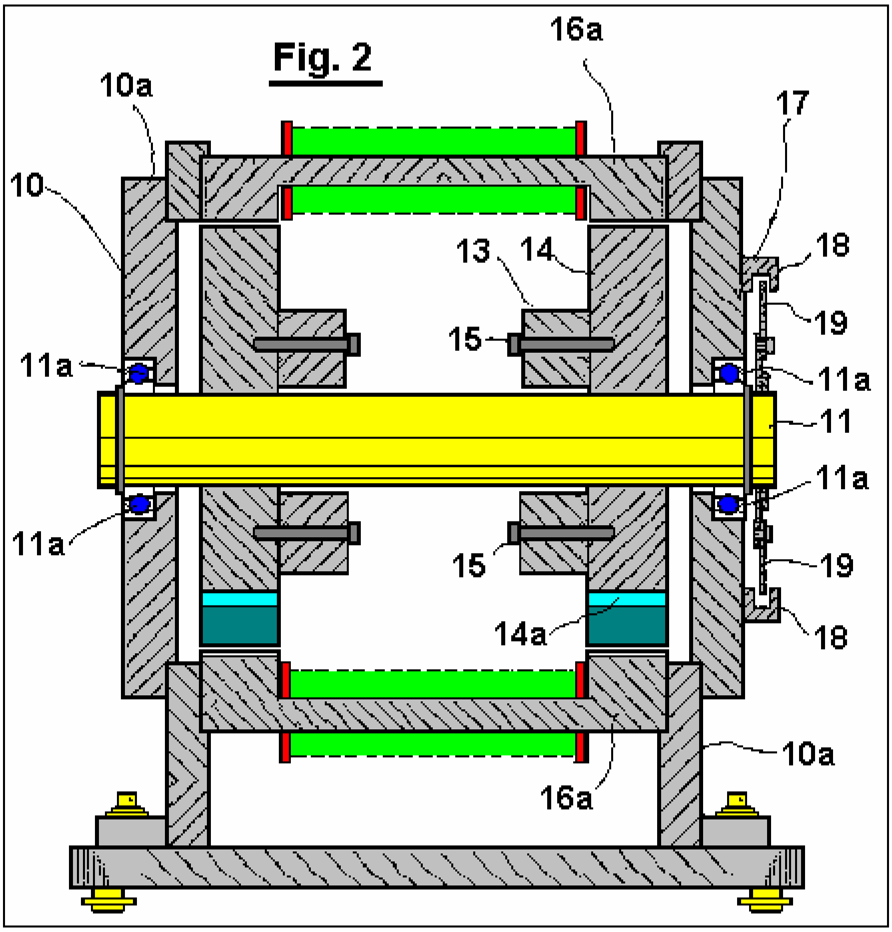

FIG. 3 is a rear elevational view of the motor provided with a light shield plate thereon;

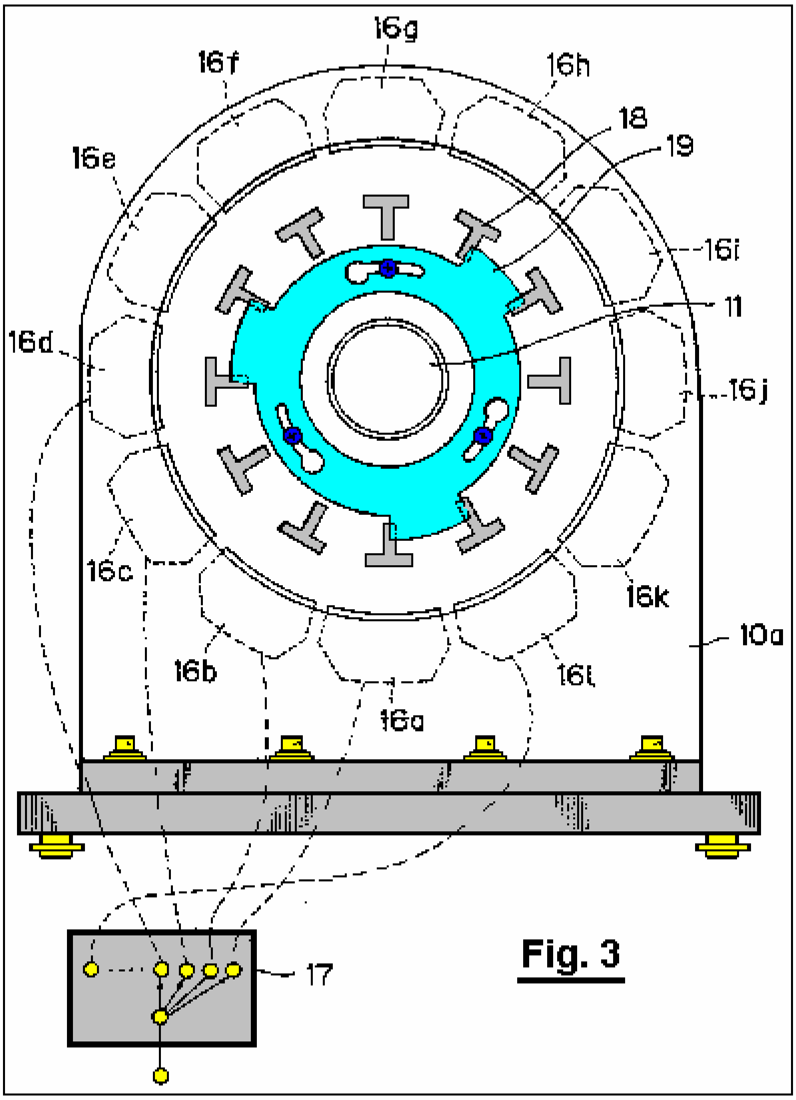

Fig. 3

Fig.4A through **Fig.4H** illustrate operation of the motor when the electromagnets are excited or magnetised;

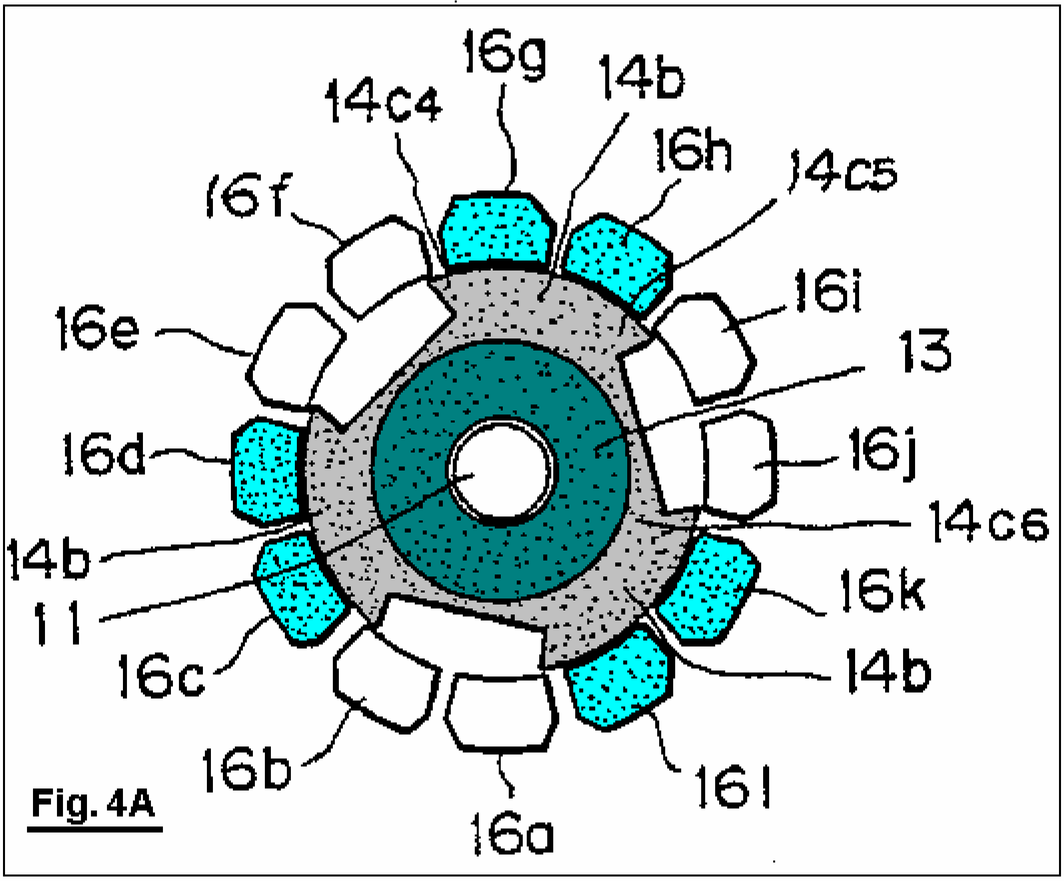

Fig. 4A

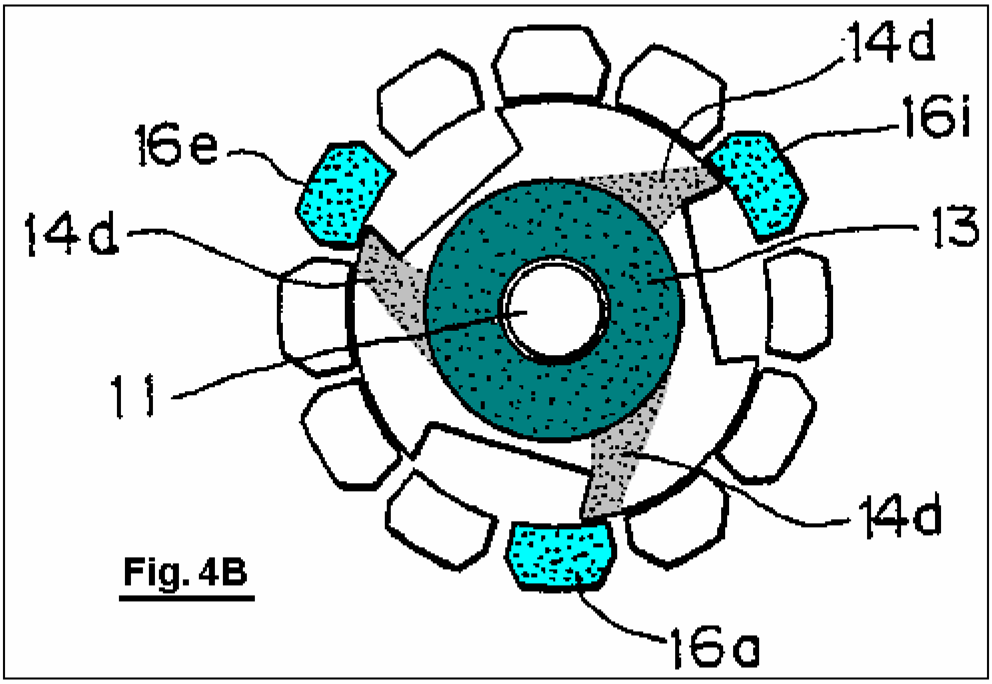

Fig. 4B

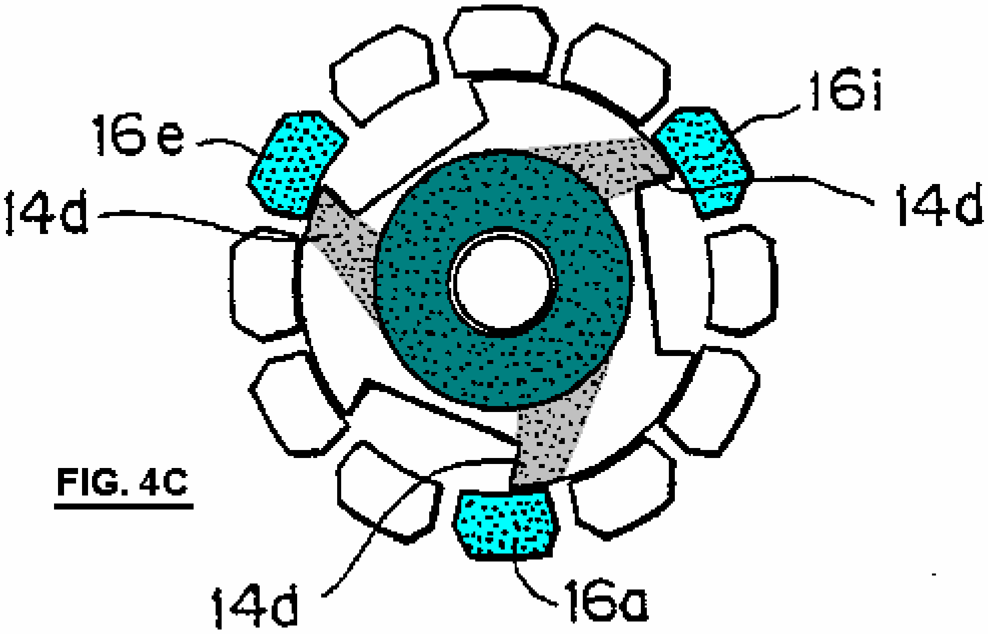

FIG. 4C

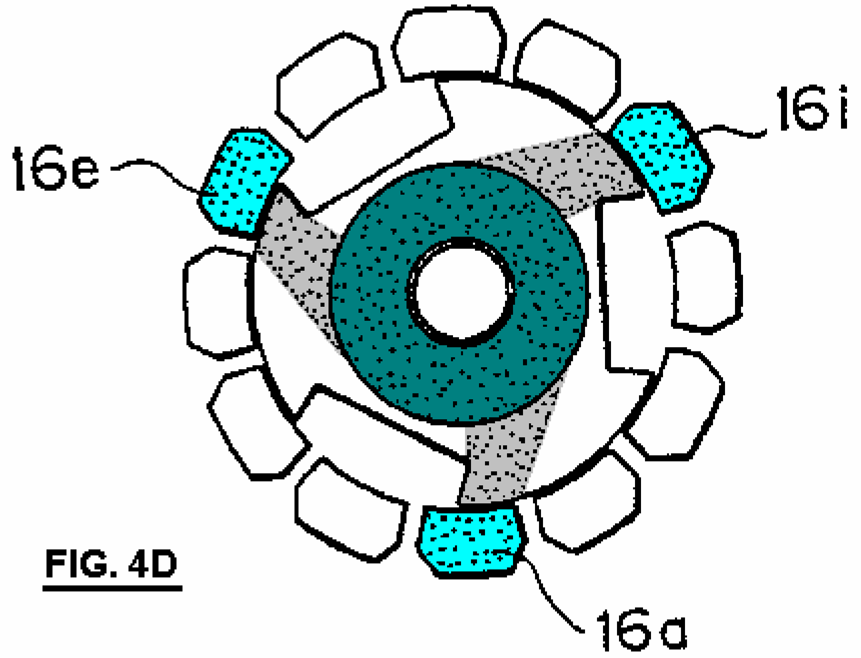

FIG. 4D

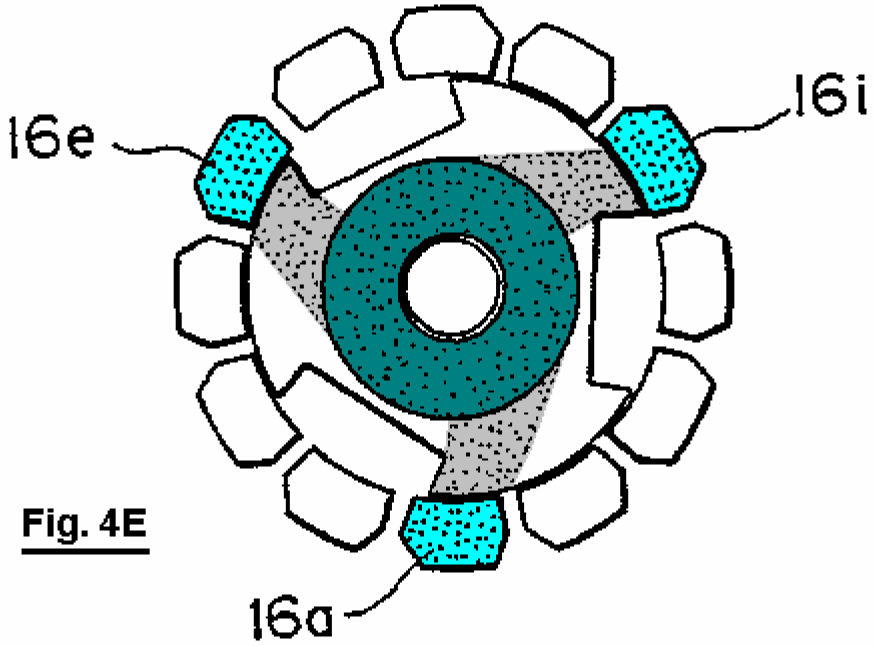

Fig. 4E

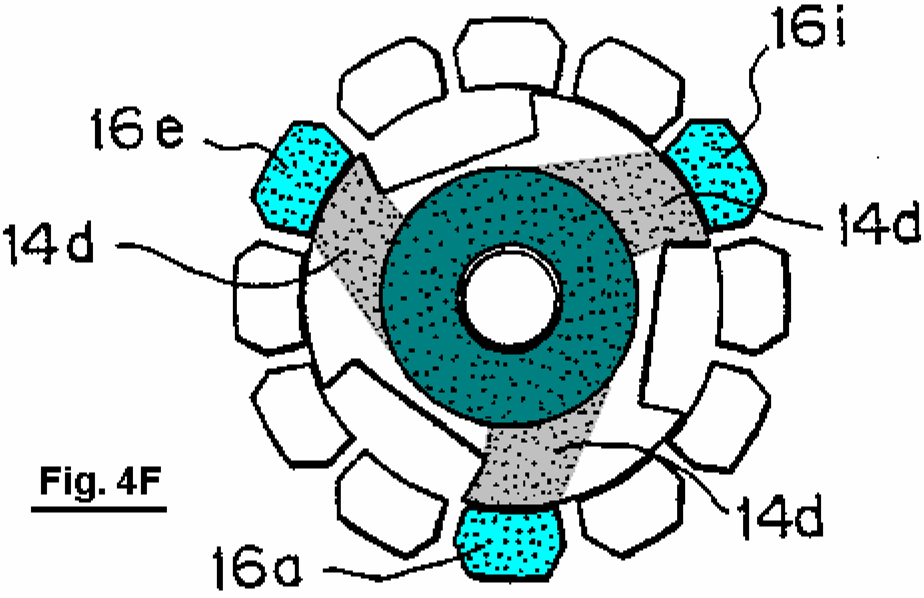

Fig. 4F

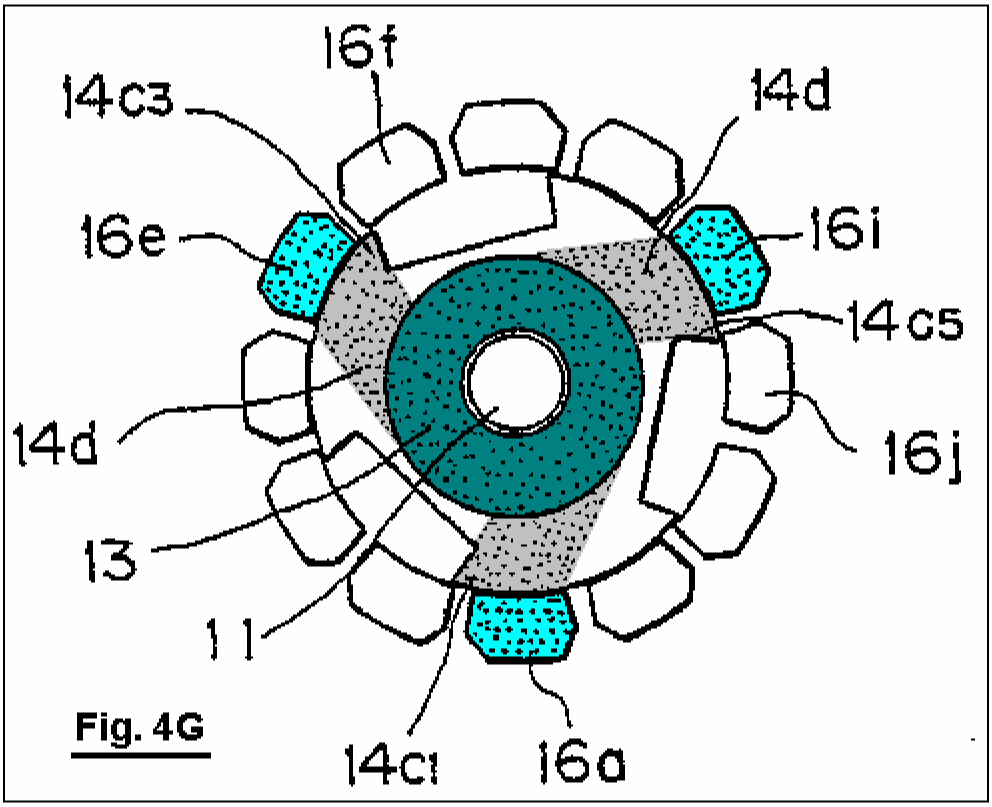
16f
14c3
14d
16e
16i
14c5
14d
16j
13
11
14c1
16a

Fig. 4G

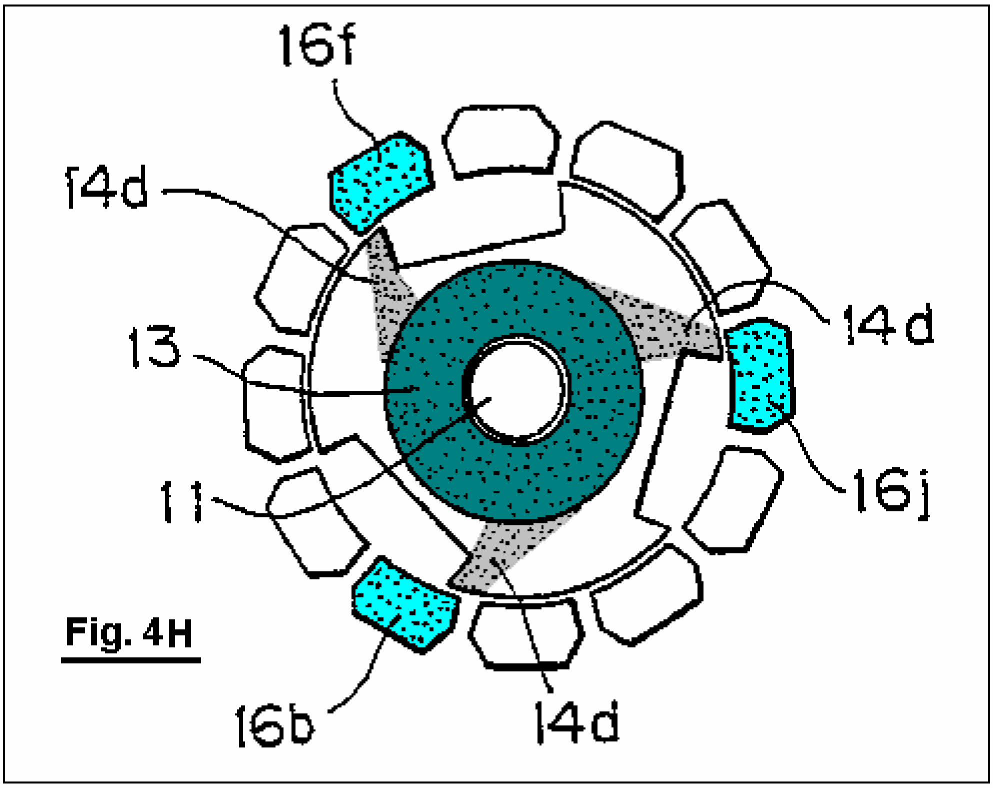
16f
14d
14d
13
16j
11
16b
14d

Fig. 4H

Fig.5A is an illustrative view showing a magnetic path of magnetic flux created by a permanent magnet of the motor when the electromagnets are not magnetised;

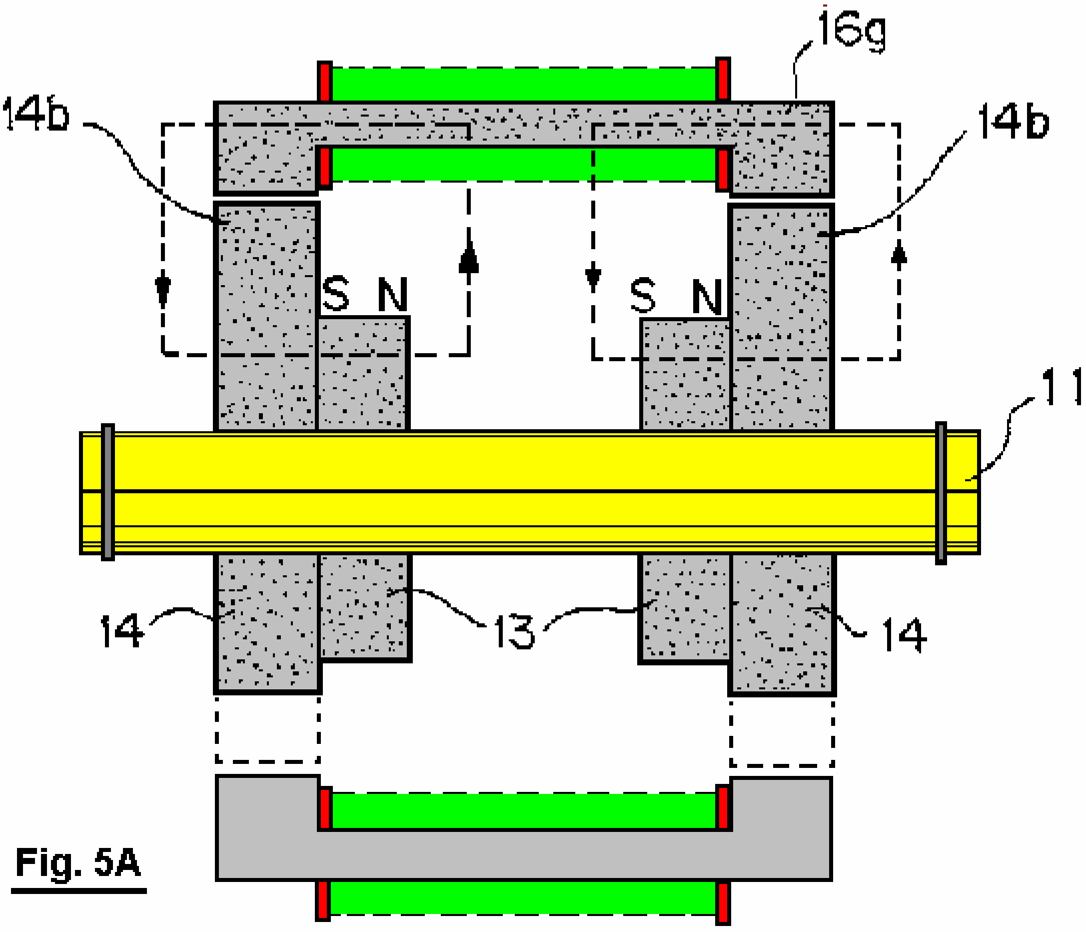

Fig. 5A

Fig.5B is an illustrative view showing a magnetic path of magnetic flux created by the permanent magnet of the motor, as well as magnetic path of magnetic flux created by the electromagnets;

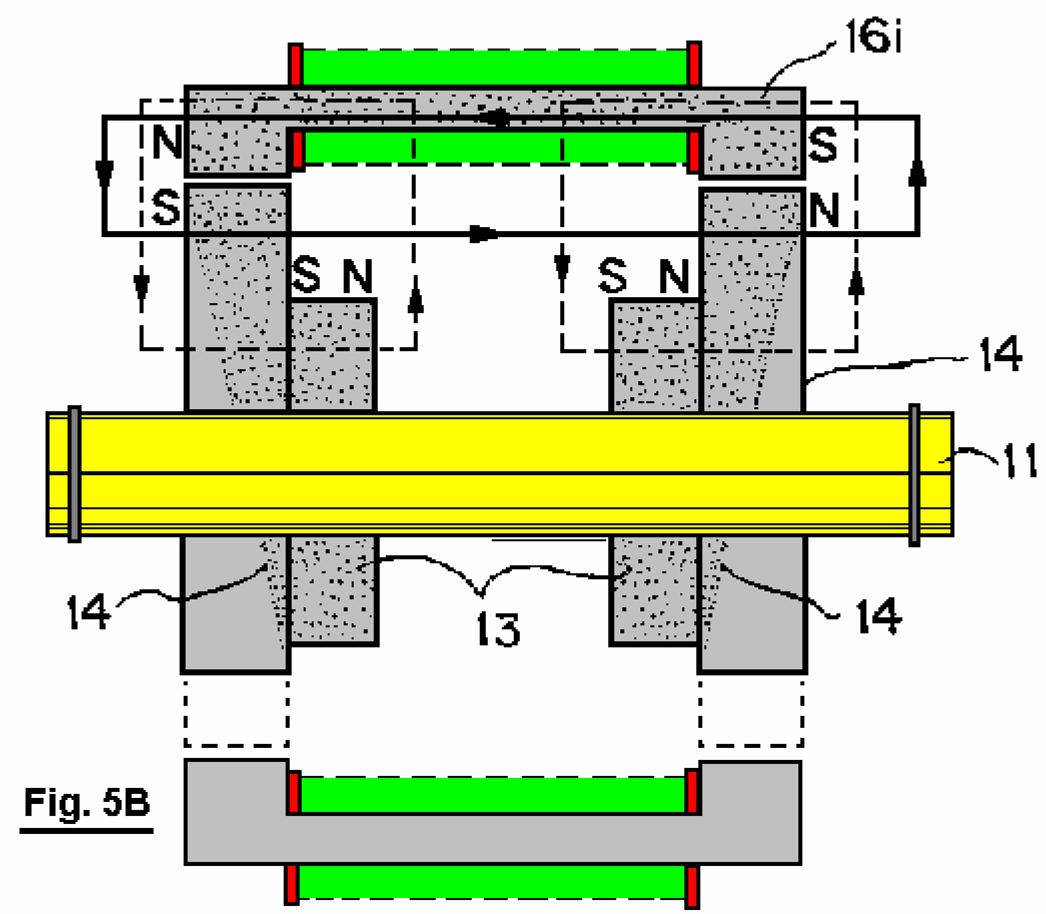

FIGS. 6 through 9 are cross-sectional view illustrating a modified form the motor;

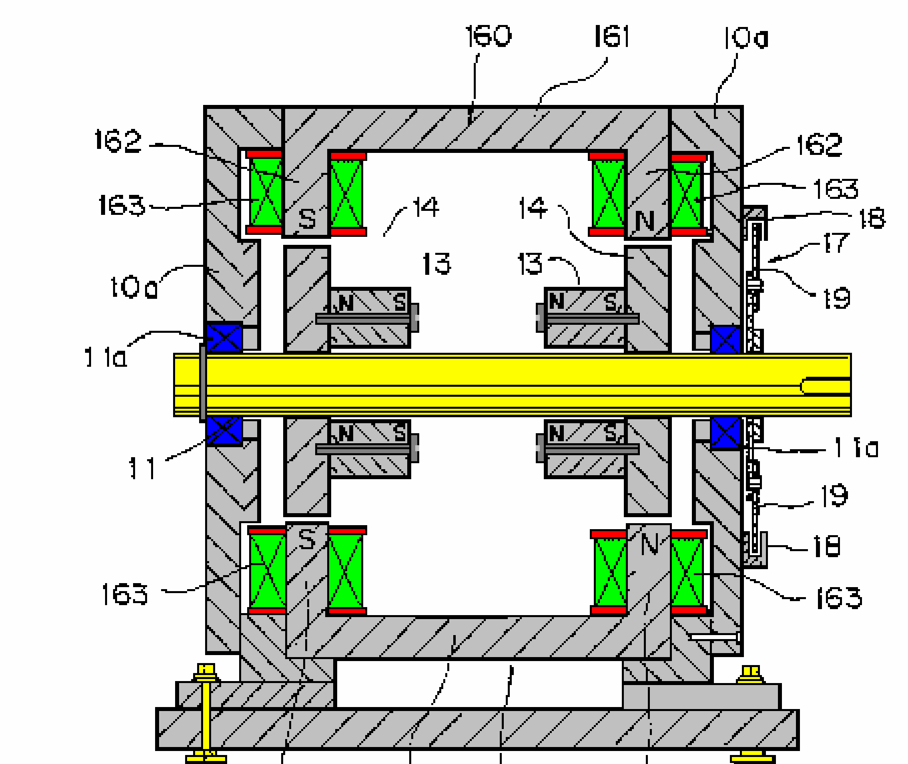

Fig. 6

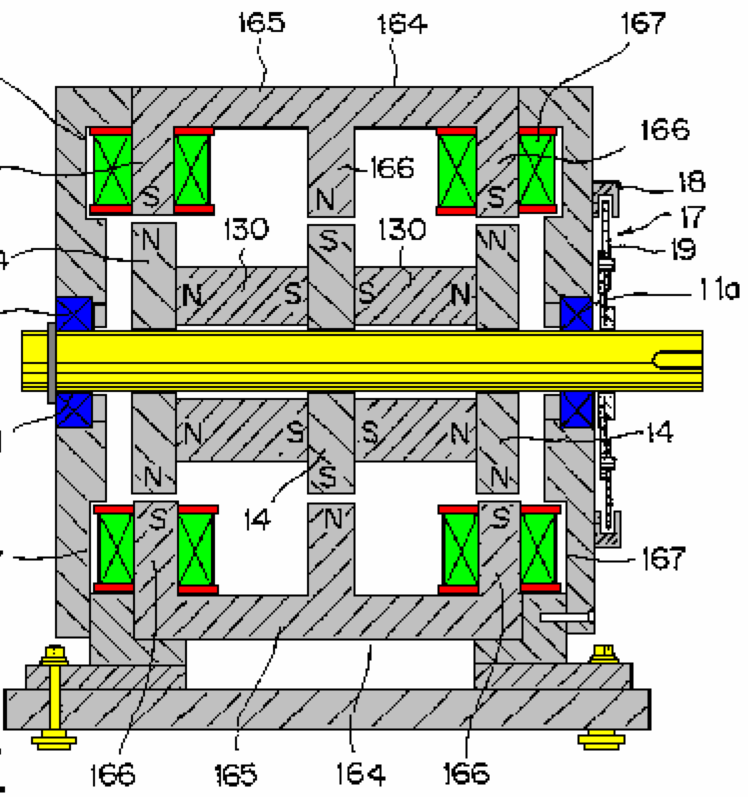

Fig. 7

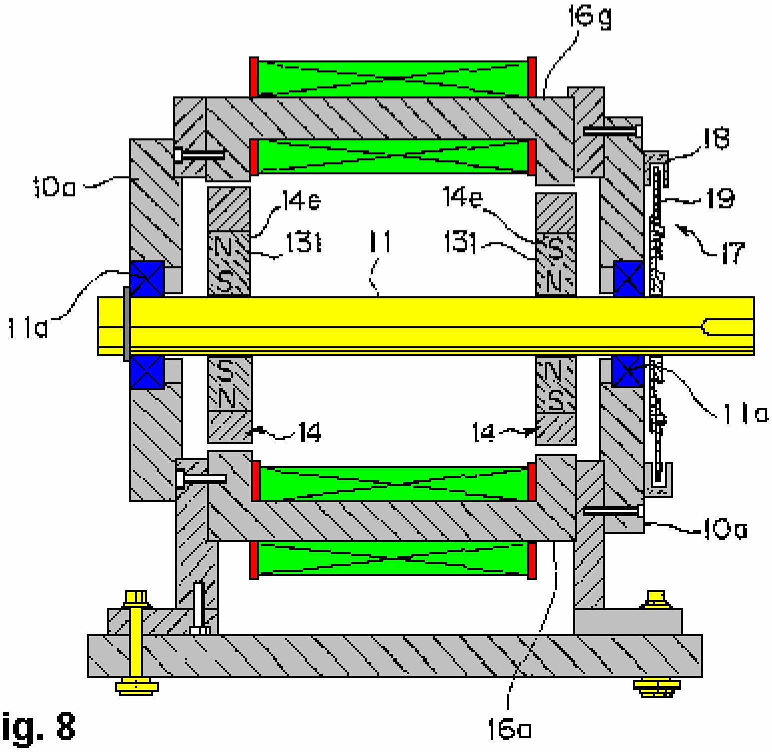
16g
18
10a
14e
14e
131
11
131
19
17
11a
11a
14
14
10a
16a
N
S
S
N
S
N
N
S

Fig. 8

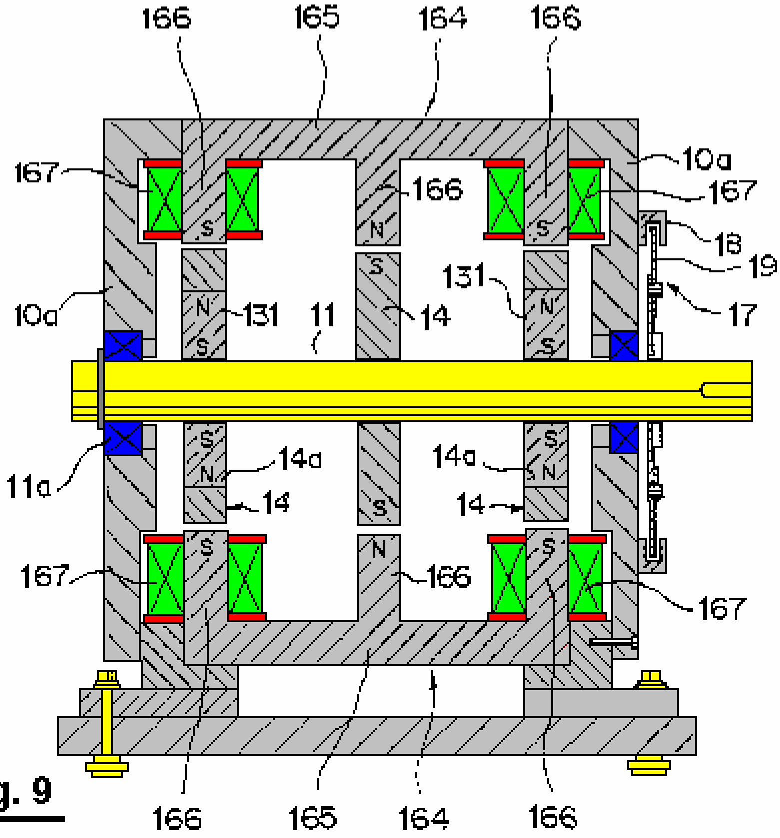
166
165
164
166
167
10a
166
167
18
19
131
10a
131
11
14
17
14a
14a
11a
14
14
167
166
167
166
165
164
166
S
N
S
N
S
N
S
S
N
S
N
S
S
N
S

Fig. 9

FIGS. 10A through 10C are cross-sectional views illustrating operation of the modified motor;

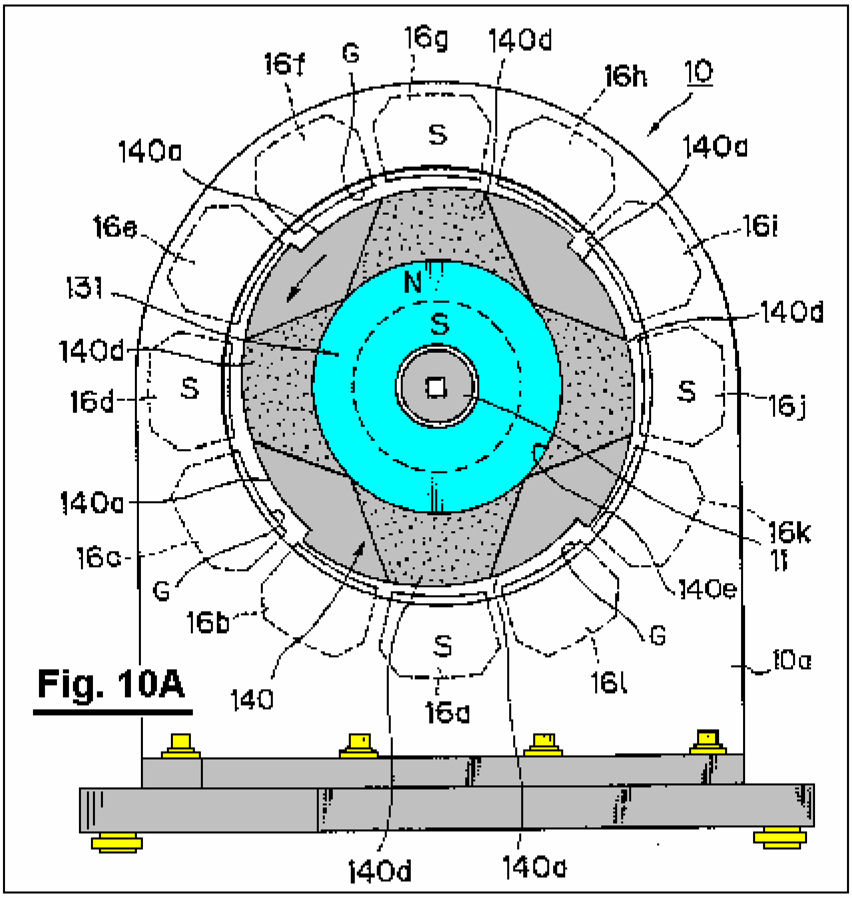
Fig. 10A

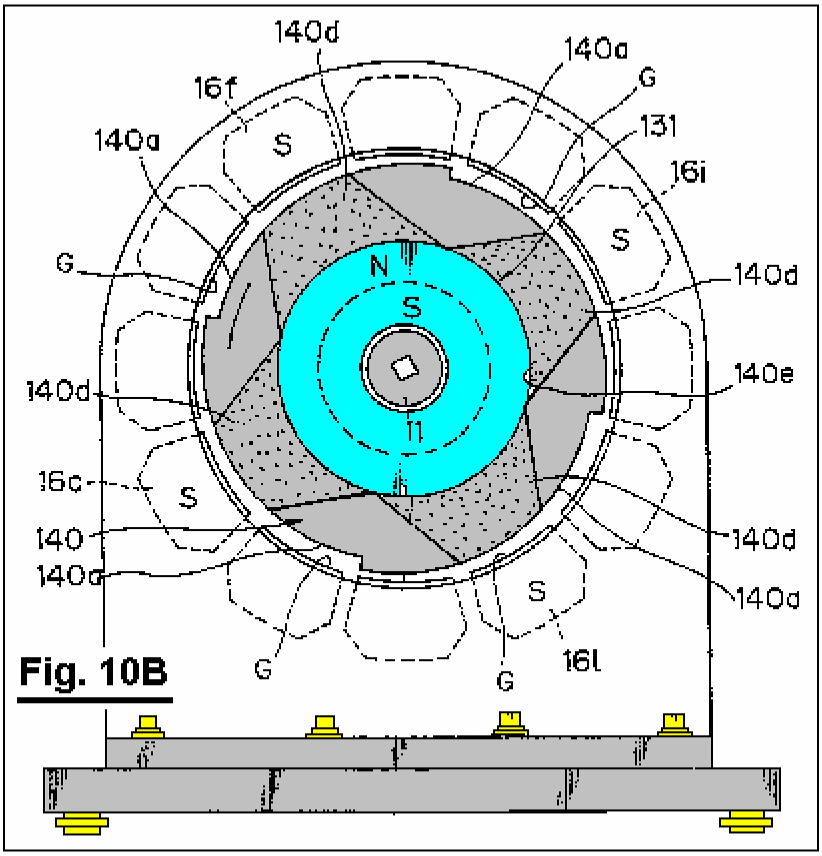
Fig. 10B

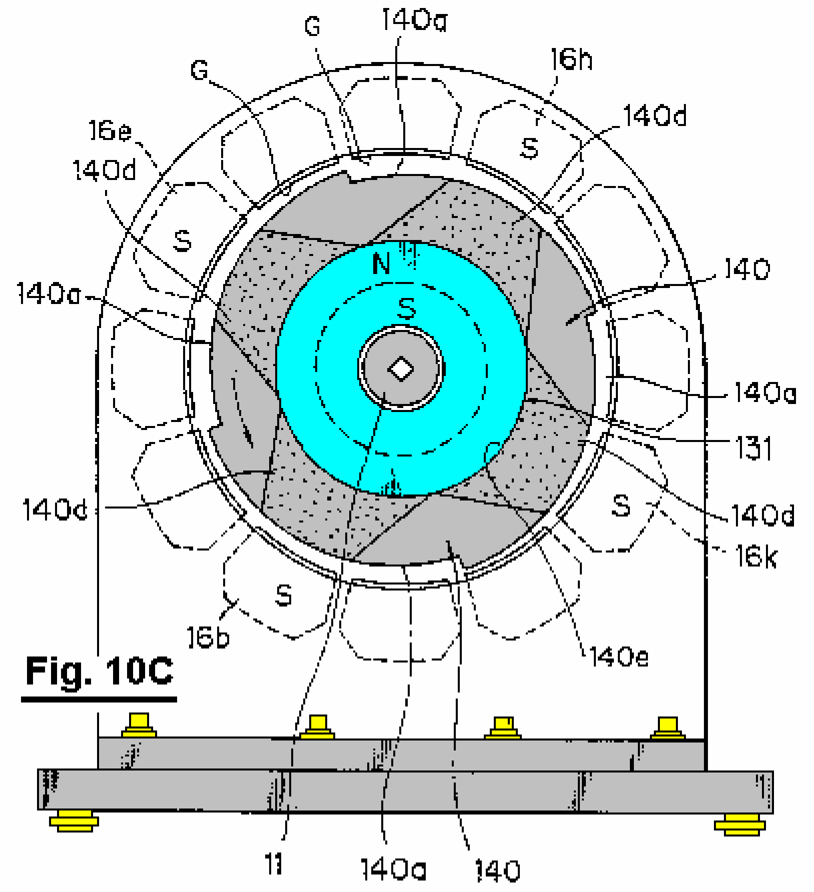

Fig. 10C

FIGS. 11A through 11H are illustrative diagrams showing operation of a motor in a form of a linear motor according to a second embodiment of the invention;

Fig. 11A

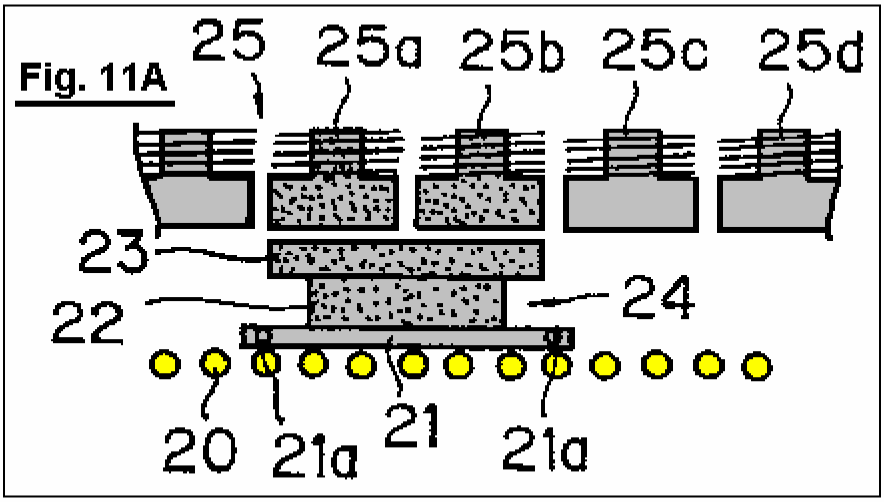

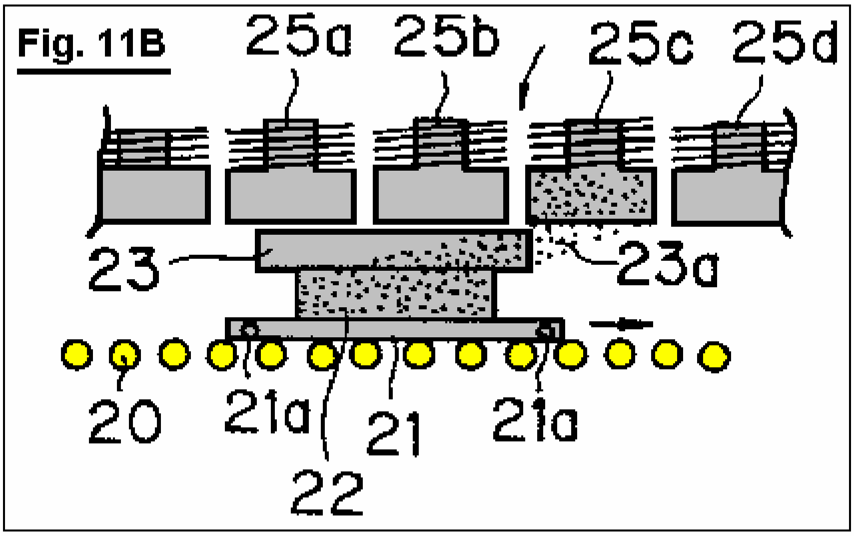

Fig. 11B

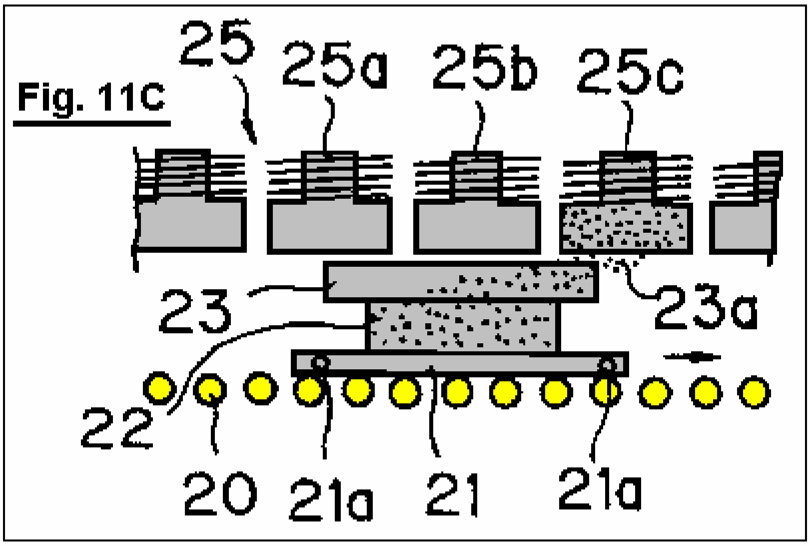

Fig. 11C

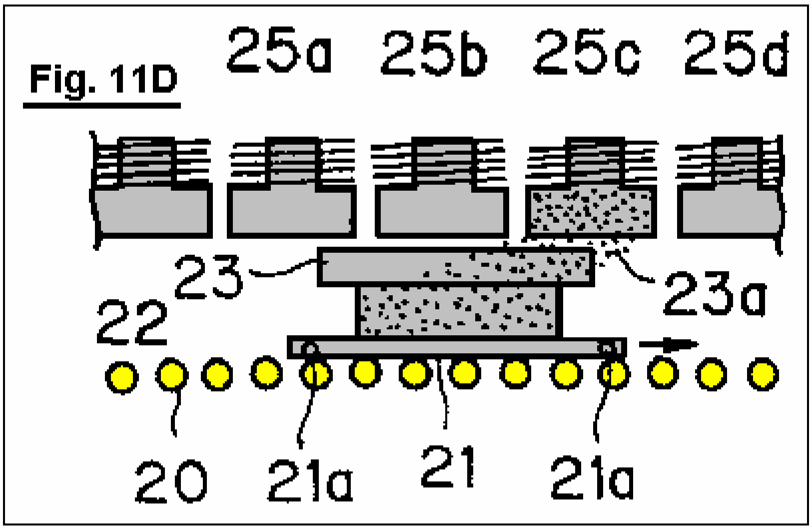

Fig. 11D

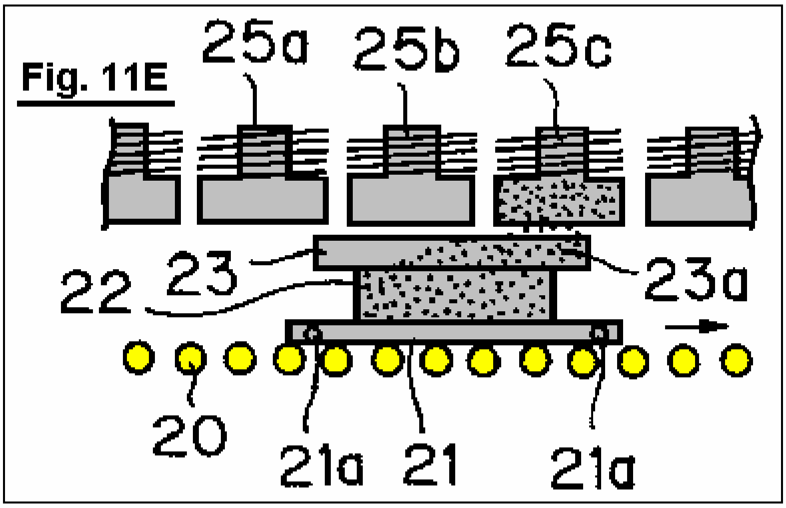

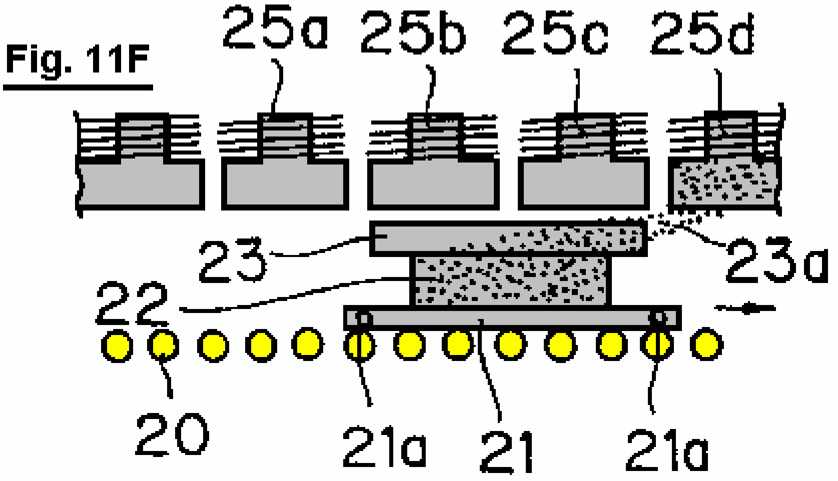

DETAILED DESCRIPTION OF PREFERRED EMBODIMENTS

Preferred embodiments of the invention will be explained in detail below with reference to the attached drawings.

According to a first embodiment of the invention, a rotational output shaft **11** is mounted in a bearing between front and rear side plates **10a** of a support member **10** through bearings **11a**, as shown in **Fig.1** and **Fig.2**. A ring of permanent magnets **13** are fitted over the opposite ends of the output shaft, inside the side plates **10a** and these move with the rotor shaft **11**. The permanent magnets are magnetised in the axial direction. A magnetic body **14** is rigidly mounted between each of the side plates **10a** of the rotor shaft **11** and the permanent magnets **13**. Each of these magnetic bodies **14** has alternate notches **14a** and magnetic teeth **14b**. It should be noted that the flux of the permanent magnets **13** passes through the respective magnetic bodies **14**. For example, **Fig.1** shows the magnetic body **14** with three notches **14a** and three magnetic teeth **14b**. The permanent magnets **13** and magnetic bodies **14** are positioned co-axially with the rotor output shaft **11**. The corresponding permanent magnets **13** and magnetic bodies **14** are shown connected together by bolts **15** so as to form a rotor **12** which is attached to the rotational output shaft **11**.

It should be noted that the support member **10** and rotational output shaft are both made from a non-magnetic material. The support member **10** may be formed, for example, from stainless steel, aluminium alloys, or synthetic resins, while the rotational output shaft **11** may be formed from stainless steel, for example. Thus, the magnetic circuit formed by the permanent magnet **13** and magnetic body at one axial end of the rotational output shaft **11** and the magnetic circuit formed by the permanent magnet **13** and magnetic body at the opposite axial end of the output shaft, are independent of one another. The magnetic bodies **14** may be formed from magnetic materials having a high magnetic permeability, such as various kinds of steel materials, silicon steel plate, permalloys, or the like.

The stator contains electromagnets **16a** through **16l**, which are positioned between the side plates **10a**. The electromagnets are evenly spaced around the magnetic pieces **14** so that they surround the magnetic bodies. As shown in **Fig.1**, twelve electromagnets may be used. The magnetic circuit of each of the electromagnets **16a** through **16l** is arranged so as to be independent of each other, so that no flux of a magnetised electromagnet passes through the iron cores of the adjacent electromagnets.

The iron cores of the electromagnets **16a** through **16l** are positioned parallel to the rotor axis shaft **11**, and positioned with only a slight gap between them and the magnetic bodies **14**.

Some of the electromagnets **16a** through **16l** are located at a position corresponding to boundary portions **14c1** through **14c6** between the notch **14a** and the magnetic tooth **14b**. For example, as shown in **Fig.1**, electromagnets **16a, 16b, 16e, 16f, 16i** and **16j** are positioned opposite the boundary portions **14c1, 14c2, 14c3, 14c4, 14c5,** and **14c6**, respectively.

Fig.5A shows a path of magnetic flux created by the permanent magnet **13** when the electromagnets are not excited or magnetised, while, **Fig.5B** shows a path of magnetic flux created by the permanent magnet **13** and a path of magnetic flux created by the windings of the electromagnets when the electromagnets are magnetised. As will be clear from **Fig.5A** and **Fig.5B**, both paths of magnetic flux represent a uni-polar distribution in which N-pole or S-pole evenly appears at the opposite axial ends. When the electromagnets are magnetised, the magnetic fields of the permanent magnet and electromagnets co-operate or interact with each other so as to generate a rotational torque.

Excitation change-over mechanism **17** for sequentially exciting or magnetising the electromagnets **16a** through **16l** is basically consisted of a conventional excitation circuit for supplying direct current to each windings of the electromagnets **16a** through **16l**. In this embodiment, the change-over portion for changing electric feed to the electromagnets **16a** through **16l** includes a plurality of optical sensors **18** and a light shield plate **19** for turning the optical sensors ON and OFF as shown in **Fig.6**.

The optical sensors **18** are spaced apart from one another with a space between them for permitting the light shield plate **19** to pass through a light emitting element and a light receiving element. The optical sensors **18** are disposed in the outer surface of one of the side plates **10a** equally spaced apart along the circumference, so that they are positioned to correspond to the electromagnets **16a** through **16l** (for example, the optical sensor **18** is shown to be disposed in the outer surface of the rear side plate). The light shielding plate **19** is fixed to the rotational output shaft **11** at the end thereof, the light shielding plate protruding from the rear side plate **10a** on which the optical sensors are mounted.

According to the illustrated embodiment, when a particular optical sensor **18** is blocked by the light shielding plate **19**, the electromagnet corresponding to such optical sensor **18** is supplied with electricity.

The operation of the first embodiment described above will be explained with reference to **Fig.4A** through **Fig.4H**.

When the electromagnets **16a** through **16l** are not supplied with electricity by means of the excitation changeover mechanism **17**, the electromagnets **16c, 16d, 16g, 16h, 16k** and **16l** opposed to the magnetic teeth **14b** with a small gap between them merely serve as a magnetic material disposed within the magnetic field of the permanent magnet **13** (refer to shaded portion in **Fig.4A**), so as to absorb the magnetic teeth **14b**, and the rotor **12** remains stationary.

When the electromagnets **16a, 16e** and **16i** positioned adjacent to the boundary portion **14c1, 14c3** and **14c5** formed between the respective notches **14a** and the magnetic teeth **14b** are magnetised or excited simultaneously by means of the excitation change-over mechanism, as shown in **Fig.4B**, the magnetic field of the permanent magnet **13** and the magnetic fields of the electromagnets **16a, 16e** and **16i** interact with each other, so that a magnetic flux **14d** passing through the magnetic body **14** instantaneously converges to the electromagnets **16a, 16e,** and **16i**. In this way, the rotor **12** is imparted with a rotational torque in a direction in which the magnetic flux **14d** will be widened, i.e., counterclockwise direction as viewed in **Fig.4B**.

Fig.4C through **Fig.4G** illustrate change in the width of the magnetic flux **14d** in accordance with rotation of the rotor **12**. When the width of the magnetic flux becomes maximised, i.e., when only the magnetic teeth **14b** are opposed to the electromagnets **16a, 16e** and **16i**, while the notches **14a** are displaced completely away from the electromagnets **16a, 16e** and **16i**, the width of the magnetic flux **14d** is maximised. Thus, an absorption force acting between the permanent magnet **13** and the electromagnets **16a, 16e** and **16i** is maximised. On the other hand, the rotational torque acting on the rotor **12** becomes zero.

Before the rotational torque acting on the rotor **12** becomes zero, i.e., as the boundary portion **14c1, 14c3** and **14c5** approach another electromagnets **16b, 16f** and **16j** positioned ahead of (with regard to the rotational direction), respectively, the electromagnets **16a, 16e** and **16i** are demagnetised and the electromagnets **16b, 16f** and **16j** are excited or magnetised by means of the excitation change-over mechanism **17**. Thus, the magnetic flux **14d** converges toward the electromagnets **16b, 16f** and **16j**, as shown in **Fig.4H**, so that a rotational torque acts upon the rotor, as described above.

Then, the electromagnets **16c, 16g** and **16k** are excited. When the boundary portion **14c1, 14c3** and **14c5** approach another electromagnets **16d, 16h** and **16l** positioned ahead with respect to the rotational direction, in response to rotation of the rotor **12**, the electromagnets **16c, 16g** and **16k** are de-magnetised and the electromagnets **16d, 16h** and **16l** are energised or excited.

As explained above, sequential excitation or energising of the electromagnets **16a** through **16l** causes interaction between the magnetic flux of the permanent magnet **13** and the electromagnets **16a** through **16l**, whereby a rotational torque is applied to the rotor **12**.

When this occurs, a rotational torque is generated between one of the magnetic poles of the permanent magnet **13** (for example, N-pole) and the magnetic poles (for example, S-poles) of the electromagnets **16a** through **16l** positioned at their respective axial ends. A rotational torque is also generated between the other magnetic pole (for example, S-pole) of the permanent magnet **13** and the other magnetic pole (for example, N-pole) of each of the electromagnets **16a** through **16l** positioned at the other axial end.

It should be noted that, at one magnetic pole, for example N-pole, of the permanent magnet **13**, certain of the electromagnets **16a** through **16l** are magnetised only to S-pole, thus preventing formation of a magnetic circuit, due to passage of magnetic flux from the excited electromagnets through either of the adjacent electromagnets, which tends to bring about N-poles magnetically similar to the permanent magnet **13**. It is also noted that, at the other magnetic pole, for example S-pole, of the permanent magnet **13**, certain of the electromagnets are magnetised only to N-pole, thus preventing formation of a magnetic circuit, due to passage of magnetic flux from the excited electromagnets through adjacent electromagnets, which tends to bring about S-poles magnetically similar to the permanent magnet **13**. The magnetic flux of the permanent magnet **13** passes through the magnetic bodies **14** so as to be converged to the excited electromagnets (refer to the magnetic flux **14d** shown in **Fig.4** through **Fig.4H**), thus forming dead zones, through which no magnetic flux passes, in the magnetic bodies **14** at a position opposite to the un-excited electromagnets. Accordingly, no force is generated which would tend to prevent rotation of the rotor **12**.

In view of electric energy applied to the electromagnets **16a** through **16l**, substantially all the electric energy applied is used to contribute to the rotation of the rotor **12**. On the other hand, and in view of magnetic energy of the permanent magnet **18**, all the magnetic energy contributes to the rotation of the rotor **12**.

It is also noted that, since the notches **14a** and the magnetic teeth **14b** are alternately disposed in the outer periphery of the magnetic materials **14** in an acute angle configuration seen in **Fig.4A** to **Fig.4H**, and the electromagnets are disposed at a position each corresponding to the boundary portions between the notches and the magnetic teeth, it is possible for the line of the magnetic force, generated in each gap between the boundary portions and the electromagnets when the electromagnets are excited, to be inclined to a substantial degree, so that a sufficient degree of rotational torque may be obtained upon initial excitation of the electromagnets.

The result obtained during an actual running test of the motor according to the first embodiment is shown in **Fig.1** to **Fig.3**.

Pure steel was used as a magnetic material. The magnetic material was 30 mm in thickness and formed to have magnetic teeth of 218 mm diameter and notches of 158 mm diameter. A ferrite magnet was used as a permanent magnet. The magnetic force of the magnet was 1,000 gauss. Electric power of 19.55 watts was applied to the electromagnets at 17 volts and 1.15 amperes. The above conditions produced a rotational speed of 100 rpm, with a torque of 60.52 Kg-cm and an output of 62.16 watts.

Alternative embodiments will be explained below with reference to **Fig.6** through **Fig.9**.

The modified embodiment shown in **Fig.6** is similar to the motor presented as the first embodiment as shown in **Fig.1** through **Fig.3**, with the exception that each electromagnet **160** used as part of the stator, comprises an iron core **161** having a pair of legs **162** which extend towards the outer periphery of the magnetic bodies (outer periphery of the magnetic teeth **14b**), each of the legs being wound with coils **163**. The remaining components are basically identical to those in the motor shown in **Fig.1** through **Fig.3**. In **Fig.6**, the components similar to those in **Fig.1** through **Fig.6** are denoted by like reference numerals. It should be noted that each coil **163** is supplied with electricity so that one leg **162** (left-hand side in **Fig.6**) of each of the iron cores **161** is magnetised to be S-pole which is magnetically opposite to the magnetic pole (N-pole) of the confronting magnetic body **14**, while the leg **162** disposed at the other end of each of the iron cores is magnetised to be N-pole which is magnetically opposite to the magnetic pole (S-pole) of the confronting magnetic body **14**.

According to this modified embodiment, it is possible to significantly reduce leakage of the magnetic flux created by the electromagnets **160** in gaps each defined between the surfaces of the magnetic poles of the electromagnets **160** and the outer peripheries of the magnetic teeth **14b** of the magnetic bodies **14**.

An alternative embodiment shown in **Fig.7** is similar to the motor shown in **Fig.1** through **Fig.8**, with the exception that: an additional magnetic body **14** is mounted on the rotational output shaft **11** at it's axial midpoint; two permanent magnets **130** are freely mounted on the output shaft **11** in the manner shown in **Fig.6**; and each iron core **165** is provided with three legs **166** positioned at the opposite axial ends and midpoint thereof and extending toward the respective outer periphery of the magnetic bodies, with the legs **166** positioned at axial opposite ends of the respective iron cores **165** being wound with a coil **167**, which form electromagnets **164**. The remaining components are substantially the same as those in the motor shown in **Fig.1** through **Fig.3**. It should be noted here, that the rotational output shaft **11** may be formed from either magnetic materials or non-magnetic materials.

As shown in **Fig.7**, each of the coils **167** is supplied with electricity so that the legs **166** positioned at the opposite axial ends of each of the iron cores **164** is magnetised to be S-pole which is magnetically opposite to the magnetic pole (N-pole) of the confronting magnetic body **14**. By this, the leg **166** positioned at the midpoint of the iron core **165** is magnetised to be N-pole which is magnetically opposite to the magnetic pole (S-pole) of the confronting magnetic body **14**.

In this embodiment, it is also possible, as in the modified embodiment shown in **Fig.6**, to significantly reduce the leakage of the magnetic flux generated by the electromagnets **164**. In addition to this, it is also possible to obtain a rotational torque between the leg **166** positioned at the midpoint of the iron core and the magnetic body **14** positioned at the axial midpoint of the rotational output shaft **11**. Accordingly, a higher rotational torque may be obtained with the same amount of electrical consumption, in comparison with the embodiment shown in **Fig.6**.

A further embodiment shown in **Fig.8** is similar to the motor shown in **Fig.1** though **Fig.3**, with the exception that a permanent magnet magnetised in the radial direction, rather than in the axial direction is employed. The permanent magnet **131** of an annular configuration has, for example, N-pole in the outer periphery and S-pole in the inner periphery. The permanent magnet **131** is received within a cavity **14e** provided in the respective magnetic body **14** at the intermediate portion thereof as disposed at the opposite axial ends of the rotational output shaft **11**. The remaining components are identical to those in the motor shown in **Fig.1** though **Fig.3**. The components identical to those in the motor shown in **Fig.1** though **Fig.3** are denoted by the same reference numerals. It should be noted that this embodiment may also employ the electromagnets **160** shown in **Fig.6**.

In this embodiment, the rotational output shaft **11** may be formed from magnetic materials, rather than non-magnetic materials.

Further embodiment shown in **Fig.9** is similar to the motor shown in **Fig.1** though **Fig.3**, with three exceptions. The first exception is that a permanent magnet magnetised in the radial direction, rather than in the axial direction is employed. The permanent magnet **131** having an annular configuration has, for example, N-pole in the outer periphery and S-pole in the inner periphery. The permanent magnet **131** is received within a cavity **14e** provided in the respective magnetic body **14** at the intermediate portion thereof as disposed at the axial opposite ends of the rotational output shaft **11**. The second exception is that an additional magnetic body **14** is disposed at the axial midpoint of the rotational output shaft **11**. Finally, the third exception is that the iron core **165** is provided with three legs **166** disposed at the axial opposite ends and the midpoint thereof, respectively, and extending toward the outer periphery of the magnetic body **14**, with the legs positioned at the opposite axial ends being wound with respective coils so as to form an electromagnet **164**. The remaining components are identical to those in the motor shown in **Fig.1** though **Fig.3**. The components identical to those in the motor shown in **Fig.1** though **Fig.3** are denoted by the same reference numerals.

As shown in **Fig.9**, each coil is supplied with electricity so that the legs **166** disposed at opposite axial ends of the iron core **165** are magnetised to be S-pole which is magnetically opposite to the magnetic pole (N-pole) of the confronting magnetic body **14**. By this, the leg **166** disposed at the midpoint of the iron core **165** is magnetised to be N-pole which is magnetically opposite to the magnetic pole (S-pole) of the confronting magnetic body **14**.

According to the embodiment described above, the rotational output shaft **11** may be formed from magnetic materials rather than non-magnetic materials. With this embodiment, it is possible to obtain the same effect as that obtained with the embodiment shown in **Fig.7**.

Further the alternative embodiments shown in **Fig.10A** to **Fig.10C** are similar to the motor shown in **Fig.1** though **Fig.3**, with the exception that: like the embodiments shown in **Fig.8** and **Fig.9**, an annular permanent magnet **131** is employed which is received in a cavity **140e** provided in the central portion **140** of the magnetic body **140**; the magnetic body **140** is provided with notches **140a** in the outer peripheral portion thereof, so that the gap G between the magnetic body **140** and the electromagnet becomes gradually broader in the rotational direction of the rotor; and the electromagnets confronting to the gap G with an intermediate width as positioned between the electromagnets confronting to the gap G with a narrower width and the electromagnets confronting to the gap G with a broader width are excited or magnetised in a sequential manner. The remaining components are identical to those in the motor shown in **Fig.1** though **Fig.3**. In **Fig.10A** to **Fig.10C**, the components identical to those in **Fig.1** though **Fig.3** are denoted by the same reference numerals. In this regard, it should be noted that reference numeral **140d** indicates magnetic flux passing through the magnetic body **140**, so as to illustrate converged condition of such magnetic flux upon excitation of the electromagnets.

In the embodiment Just described above, it is possible to rotate the rotor in the counter clockwise direction as viewed in **Fig.10A**, for example, by exciting the electromagnets **16a, 16d, 16g** and **16j**, as shown in **Fig.10A**, then, the electromagnets **16c, 16f, 16i** and **16l**, as shown in **Fig.10B**, and then the electromagnets **16b, 16e, 16h** and **16k**. According to this embodiment, it is possible to obtain a stable rotational force, as well as a higher rotational torque, even though number of rotations is reduced in comparison with the above embodiment.

As shown in **Fig.10A**, four notches **140a** are provided. It should be noted, however, that two or three notches may be provided. It is also possible to attach the magnetic material **140** to the rotational output shaft **11** in an eccentric manner in its entirety, without providing notches **140a.**

Fig.11A through **Fig.11H** are illustrative diagrams showing the operation of the second embodiment of the invention when developed into a linear motor type.

According to this embodiment, a movable body **21** is adapted to be moved along a linear track **20** of a roller conveyor type. The track includes a frame on which a plurality of rollers are positioned in parallel relative to one another. A permanent magnet **22** is mounted on the movable body **21**. A magnetic body **23** of a plate-like configuration is fixed to the permanent magnet **22** in the upper surface, so as to form a movable element. It should be noted that magnetic flux from the permanent magnet **22** passes through the magnetic body **23**. A plurality of electromagnets **25a, 25b, 25c, 25d** and so on are disposed above the movable element **24** along the linear track positioned parallel to each other. These electromagnets constitute a stator **25**. Magnetic circuits of the electromagnets **25a, 25b, 25c, 25d**, and so on, are independent from one another, so that the electromagnets are magnetised in a sequential manner by means of excitation change-over mechanism (not shown), so as to have a magnetic polarity opposite to the magnetic pole of the permanent magnet **22**. Power output shafts **21a** are attached to a side surface of the movable body **21**.

Operation of the above second embodiment will be explained below.

As shown in **Fig.11A**, and when no electricity is supplied to the electromagnets, the electromagnets **25a** and **25b** positioned Just above the movable element **24** are subjected to magnetic field of the permanent magnet **22** (refer to shaded portion in **Fig.11A**). Thus, such electromagnets magnetically absorb the magnetic body **23**, so that the movable element **24** remains to be stopped.

As shown in **Fig.11B**, and when the electromagnet **25c**, positioned ahead with respect to the direction in which the movable element **24** moves, is excited, the magnetic field of the permanent magnet **22** and the magnetic field of the electromagnet **25c** interact with each other, so that magnetic flux **23a** passing through the magnetic body **23** converges instantaneously toward the electromagnet **25c**. By this, the movable element **24** is magnetically absorbed to the electromagnet **25c**, so that it is moved along the linear track **20** under the propulsive force acting in the direction in which the width of the magnetic flux **23a** becomes broader, i.e., in the direction of an arrow mark shown in **Fig.11B**.

Fig.11C through **Fig.11E** illustrate a change in width of the magnetic flux **23a** in response to movement of the movable element **24**. At the point at which the width of the magnetic flux **23a** becomes maximised, i.e., when the forward end of the magnetic material **23** of the movable element **24** is positioned just before passing by the electromagnet **25c**, the width of the flux **23** becomes maximised. At this time, magnetic absorption acting between the permanent magnet **22** and the electromagnet **25c** becomes maximised, but the propulsive force acting on the movable element becomes zero.

Before the propulsive force acting on the movable element **24** becomes completely zero, i.e., when the forward end of the magnetic body **23** of the movable element **24** is about to pass the electromagnet **25d**, the excitation changeover mechanism is actuated so as to stop excitation of the electromagnet **25c** and so as to initiate excitation of the electromagnet **25d**. Thus, the magnetic flux **23a** converges to the electromagnet **25d**, as shown in **Fig.11F**, so that a propulsive force acts on the movable element **24**, as in the previous stage.

Subsequently, and in response to further movement of the movable element **24**, the width of the magnetic flux **23a** is reduced as shown in **Fig.11G** and **Fig.11H**, and thus a similar operation will be repeated.

The sequential excitation of the electromagnets, as explained above, causes interaction between the magnetic fields of permanent magnet **22** and electromagnets, whereby a propulsive force is applied to the movable element **24**.

It should be noted that, when the magnetic polarity of the permanent magnet **22** confronting the electromagnets is assumed to be N-pole, the electromagnet **25c** is magnetised solely to be S-pole, so as to prevent formation of a magnetic circuit by virtue of passage of magnetic flux from the electromagnet **25c** through to the adjacent electromagnets **25b** and **25d**, which formation, if it occurs, tends to cause the polarity of the electromagnets to be N-pole identical to the magnetic pole of the permanent magnet **22**. Accordingly, and in a manner similar to that in the first embodiment, no force is generated which tends to interfere with movement of the movable element **24**.

In the present invention, a plurality of electromagnets serving as a stator are so arranged that their respective magnetic circuits become independent from one another. The electromagnets are also arranged so that they are solely magnetised or excited to have a magnetic polarity opposite to the magnetic pole of the confronting permanent magnet. Thus, each electromagnet is prevented from becoming magnetised to the same polarity as that of the permanent magnet, which may occur when magnetic flux from a particular electromagnet passes through to adjacent electromagnets. Accordingly, no force will be exerted which tends to interfere with the intended movement of a rotor or a movable element. As a result, electric energy applied to the electromagnets may be efficiently utilised, while, at the same time, magnetic energy contained in the permanent magnet may-also be efficiently utilised.

The coils constituting the electromagnets are consistently supplied with electric current with the same polarity, without any change, so that heating of coils may be prevented. Further, it is possible to obviate the problems of vibration and noise which might occur due to a repulsive force being generated when polarity of an electric current supplied to the coils is changed.

JOSEPH NEWMAN: ENERGY GENERATOR

Patent WO8300963 17th March 1983 Inventor: Joseph W. Newman

ENERGY GENERATION SYSTEM HAVING HIGHER ENERGY OUTPUT THAN INPUT

This patent covers a device which is claimed to have a greater output power than the input power required to run it.

ABSTRACT

A system for generating obvious work motion, or electromagnetic energy (fields of force) or electric current utilising the electromagnetic energy which makes up a matter and results in a greater output of energy, than the initial input of conventional energy means and teachings. A first exemplary embodiment (**Fig.1**) of the generator uses a contained fluid (**117**) surrounding a series of aligned magnets (**120**); while a second exemplary embodiment (**Fig.3**) uses a special material (**201**) held stationary between two static magnets (**202**, **203**), the special material having its atoms aligned but maintaining the resulting magnetic field at least substantially within its boundary surface; while third and fourth exemplary embodiments (**Fig.5** and **Fig.6**) utilise a relatively heavy coil (**205**) made up of relatively large diameter wire of relatively great length and number of loops and length and a relatively small energising current to drive a rotatable permanent magnet (**200**).

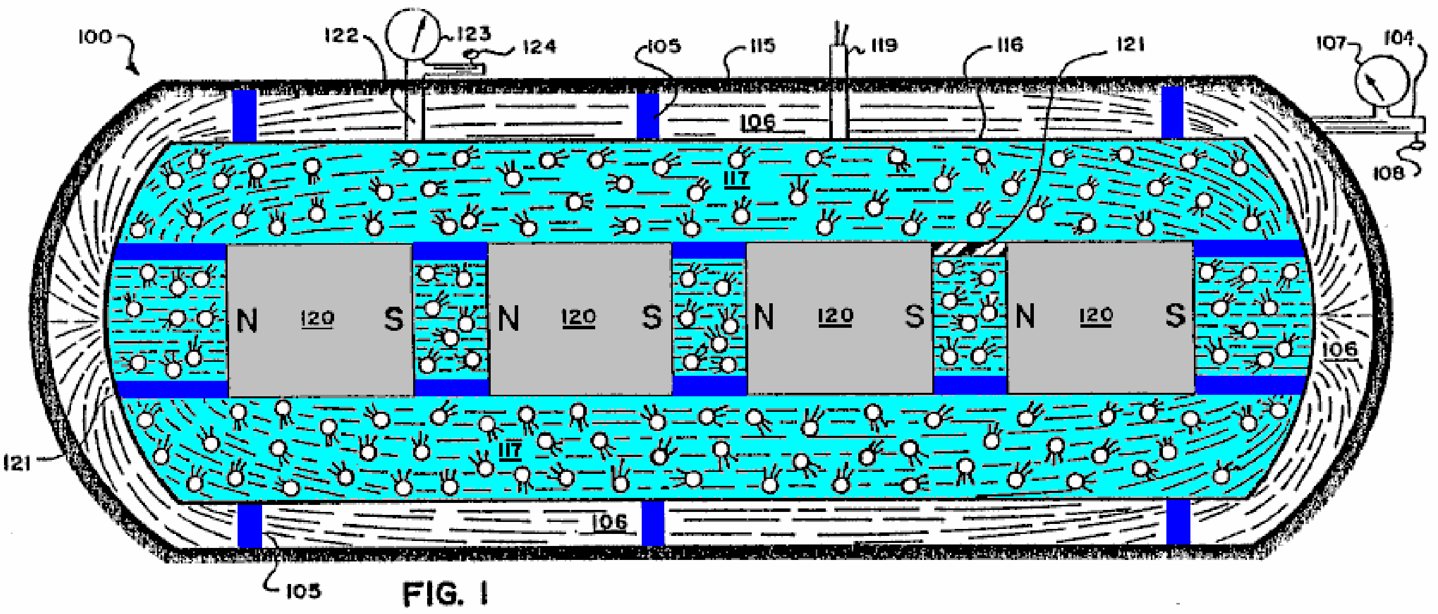

FIG. 1

DESCRIPTION

BACKGROUND OF THE INVENTION

1. Field of the Invention:

The present invention relates generally to devices or systems (including methods) for generating usable energy such as for example electrical energy from electromagnetic fields, electrical energy or electromagnetic fields from matter, and more particularly to devices or systems (including methods) for producing electrical current flow for use as electrical power, and magnetic fields of force which cause motion (obvious work) or electrical current flow or for increasing electromagnetic potential energy available for use or mechanical energy available for use.

2. Prior Art:

There have been many devices proposed over the years for producing electrical-energy, with mechanical friction, thermo-electricity, photoelectricity, piezoelectricity, electrochemistry and electromagnetic induction being the chief forms of primary energy capable of producing electricity. Of these, the only significant source of commercial electrical power has been the mechanical actions of electric generators, and for mobile electric power the chemical action of batteries has been important. Usable motion has resulted from the interactions between the input of electrical energy and the magnetic and/or electromagnetic fields of force (electric motors) and heat or light as a result of input of electrical current through conventional mechanical systems, heaters, lightbulbs, etc.

All of the prior art systems are designed accordingly to rigid mathematical laws taught both in physics and electrical engineering which coincide with the hypothesis rigidly accepted by the industrial and scientific communities concerning the Second Law of Thermodynamics (1850).

From the foregoing generally accepted hypothesis it has also been generally accepted and rigidly taught in physics and electrical engineering that the electric current flowing in a closed circuit from a battery, electric generator, etc.

is used up in the mechanical device being operated by this flow of electric current, and that all such electric current producing systems would only put out at most work equal to the work initially put into the system, or in accordance with generally accepted laws stating that a particular electrical generating system was only capable of a given output of energy and no more.

These beliefs have till this date still remained rigid in both the industrial and scientific communities in spite of proof of Einstein's equation $E=mC^2$ Nuclear reactors convert matter into usable electromagnetic energy in the form of heat, which converts water into steam to turn conventional turbines for production of electric current by conventional electrical generating means. This system is extremely inefficient using less than 1% of the energy of the atom and producing a deluge of contaminated materials which has caused a serious problem as to safe disposal.

Additionally, the basic electrical generators is use throughout the world today utilise the principle of causing relative movement between an electrical conductor (for example a rotor) and a magnetic field produced by a magnet or an electromagnet (for example a stator), all using the generally accepted hypothesis that the greater the relative speed or movement between the two are concerned and the more normal or perpendicular the relative movement of the conductive material to the lines of force of the electromagnetic field, the greater will be the efficiency of the prior art electrical generator. Additionally, all of the prior art systems are based on the generally accepted hypothesis that the greater the electrical conductivity of the material being moved through the field, the more efficient will be the electrical generation.

From the foregoing generally accepted hypotheses, it also has been generally accepted that there should always be movement between, for example, the rotor and stator elements, and that only generally accepted electrical conductors, that is materials with high electrical conductivity, will effectively serve in an electrical generation system.

However, in one of the systems (**Fig.3**) of the present invention, electrical generation can occur with relatively static elements and with materials that are not generally considered to be of high electrical conductivity, although, of course, the present invention likewise can utilise relatively moving elements as well as materials of generally accepted high electrical conductivity, if so desired, as occurs in the systems of the present invention illustrated in **Fig.5** and **Fig.6**.

The prior art has failed to understand certain physical aspects of matter and the makeup of electromagnetic fields, which failure is corrected by the present invention.

BRIEF DESCRIPTION OF DRAWINGS

For a further understanding of the nature and objects of the present invention, reference should be had to the following detailed description, taken in conjunction with the accompanying drawings, in which like parts are given like reference numerals and wherein:

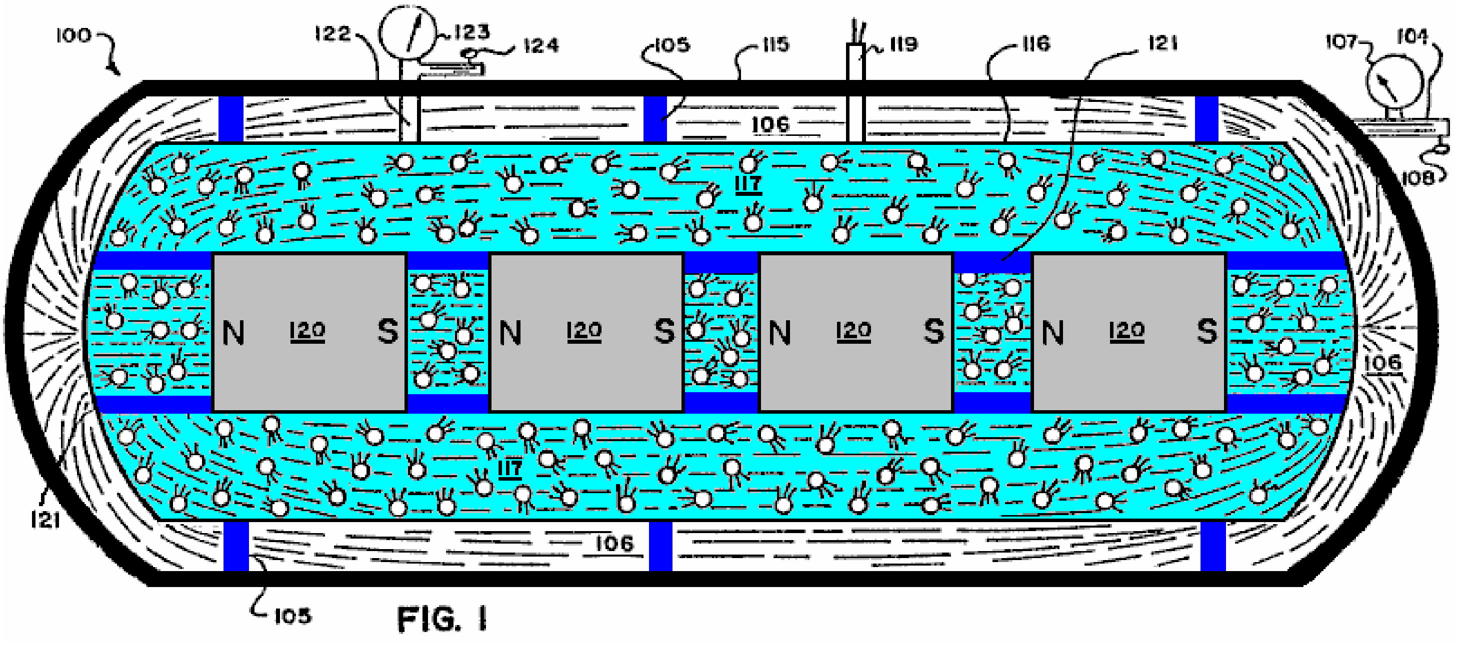

FIG. 1

Fig.1 is a schematic, side view in generalised, representational form of a first embodiment of an electrical generator based on the principles and guidelines of the present invention.

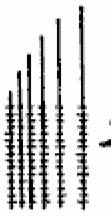

FIG. 2

Fig.2 is a close-up view in general form of an electrical charge pick-up element which can be used in the generator illustrated in **Fig.1**.

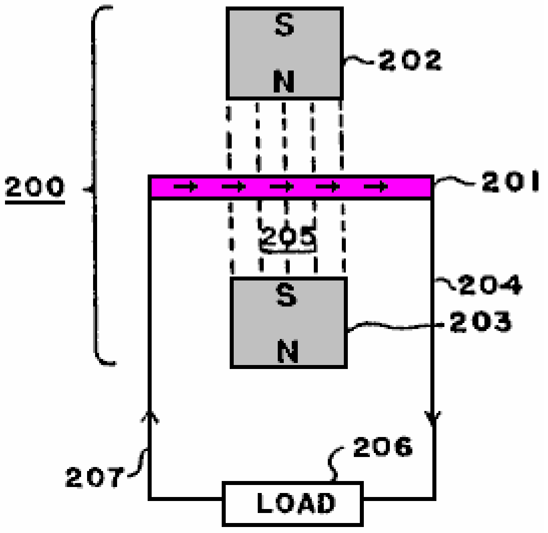

FIG. 3

Fig.3 is a schematic view in generalised, representational form of a second embodiment of an electrical generator based on the principles and guidelines of the present invention.

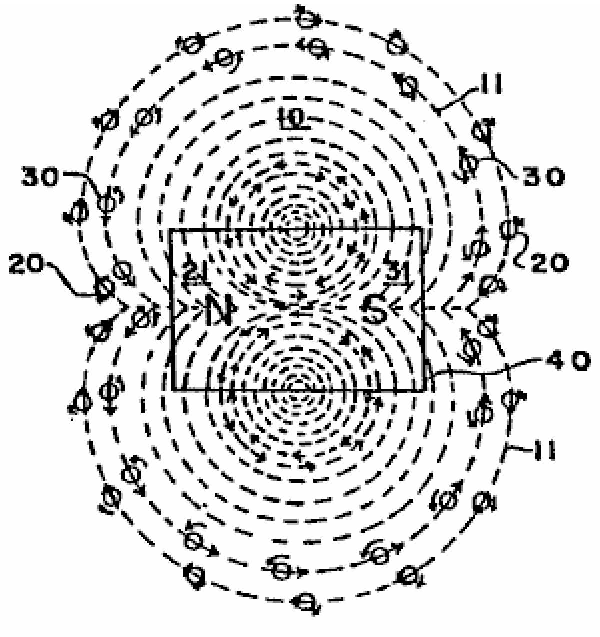

FIG. 4

Fig.4 is a schematic view in generalised, representational form of the negative and positive particles exhibiting gyroscopic actions which emanate from a magnet to form an electromagnetic field.

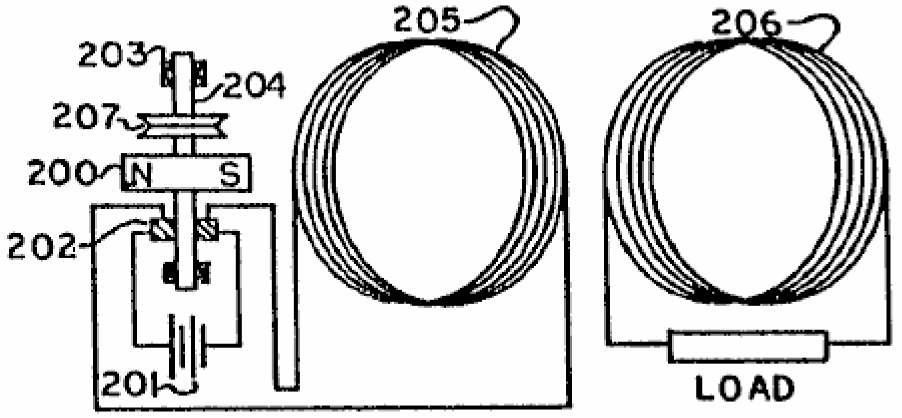

FIG 5

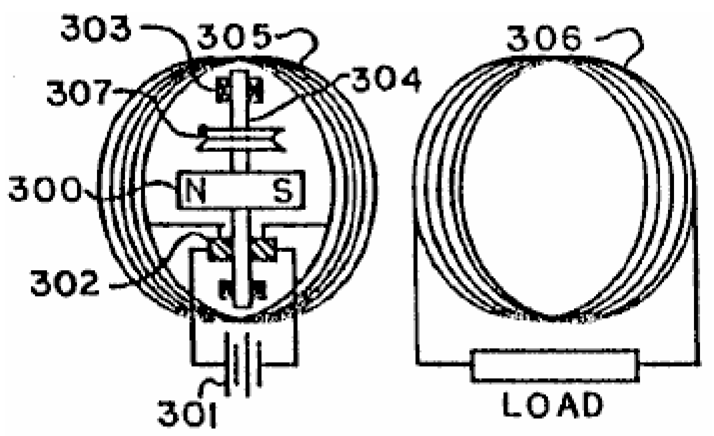

FIG 6

Fig.5 and **Fig.6** are schematic views in generalised, representational form of third and fourth embodiments of a combined electrical generator and motor utilising a static, relatively large coil energised by a relatively low current driving a rotatable magnet, wherein in the embodiment of **Fig.5** the rotatable magnet is positioned along side of the coil and in the embodiment of **Fig.6** the rotatable magnet is positioned within the open core of the coil.

DETAILED DESCRIPTION OF-PREFERRED EMBODIMENTS:

Basic Principles and Guidelines

In accordance with the principles of the present invention and as generally illustrated in **Fig.3**, an electromagnetic field **10** comprises flows of quanta or particles **20**, **30** of electrical energy flowing from each of the poles **21**, **31** of a magnet (or electromagnet) **40** to the other pole, following the "lines of force" **11** of the electromagnetic field. These particles **20**, **30**, believed to be travelling at the speed of light, are always coming out of one end **21**, **31**, respectively, of the magnet **40** and going into the other pole **31**, **21**, respectively, flowing from a relatively high energy source to a low energy source.

These particles **20**, **30** are, it is believed, negative and positive charges and have a spin producing a gyroscopic motion and follow the mechanical laws of gyroscopic action.

The mass of each of the particles **20**, **30** equals the energy of the particle divided by the speed of light squared. The peripheral speed of the gyroscopic spin of the particles is believed to be the speed of light.

For purposes of illustration only and as a matter of nomenclature, the positive charge particle **20** is going in one direction ('-'N" to "S") with a clockwise spin, and the negative charge particle **30** is going in the opposite direction with a counter-clockwise spin. Of course, if a particle such as **20** or **30** is flipped around one-hundred-and-eighty degrees, it becomes the opposite charge or type of particle.

The electromagnetic field **10** is thus the orderly flow of the positive and negative charges **20**, **30** moving at the speed of light from the north and south poles **21**, **31**, to the south and north poles **31**, **21**, respectively, and follow the paths of what is termed in the art as the "lines of force" **11** of the electromagnetic field **10**.

As is known from the laws of gyroscopes, a gyroscopic particle or body moves at right angles to the direction of an applied force. Therefore, when a force is applied to the electrical energy particles **20**, **30**, they will move at right angles to that force.

It should also be noted from known gyroscopic laws that the electrical energy particles **20**, **30**, when they move with their gyroscopic axis straight into an object, tend to knock that object straight, but, if that object hits the particles at an angle to the axis other than at zero or one-hundred-and-eighty degrees, the particles are moved off at an angle from the straight.

Additionally, it is noted that a magnetic field caused by a current flowing through a wire comes from negative and positive particles, such as **20**, **30**, with a net flow of such particles going in the same direction but with opposite spin.

In the system and method of the present invention, the foregoing principles serve as guidelines in the present invention.

Reference is further had to pages DD23 through DD27 of the Disclosure Document and to page 8, line 26 through page 11, line 23 of the prior application Serial number 25,907 and its Figures 7 - 10.

From the foregoing disclosures, many different devices, structures, and methods are possible to embody the principles and guidelines of the system of the present invention, which will in general utilise a material or substance or structure to place a force at the proper angle to the gyroscopic particles **20**, **30** wherein the particles **20**, **30** follow a path or paths which do not cancel one another out, thereby producing electrical current at appropriate outputs for further use or for increasing available potential electrical energy for ultimate use.

-First Embodiment (**Fig.1**)

One possible, exemplary embodiment using the principles of the system of the present invention is schematically shown in the generalised illustration of **Fig.1**.

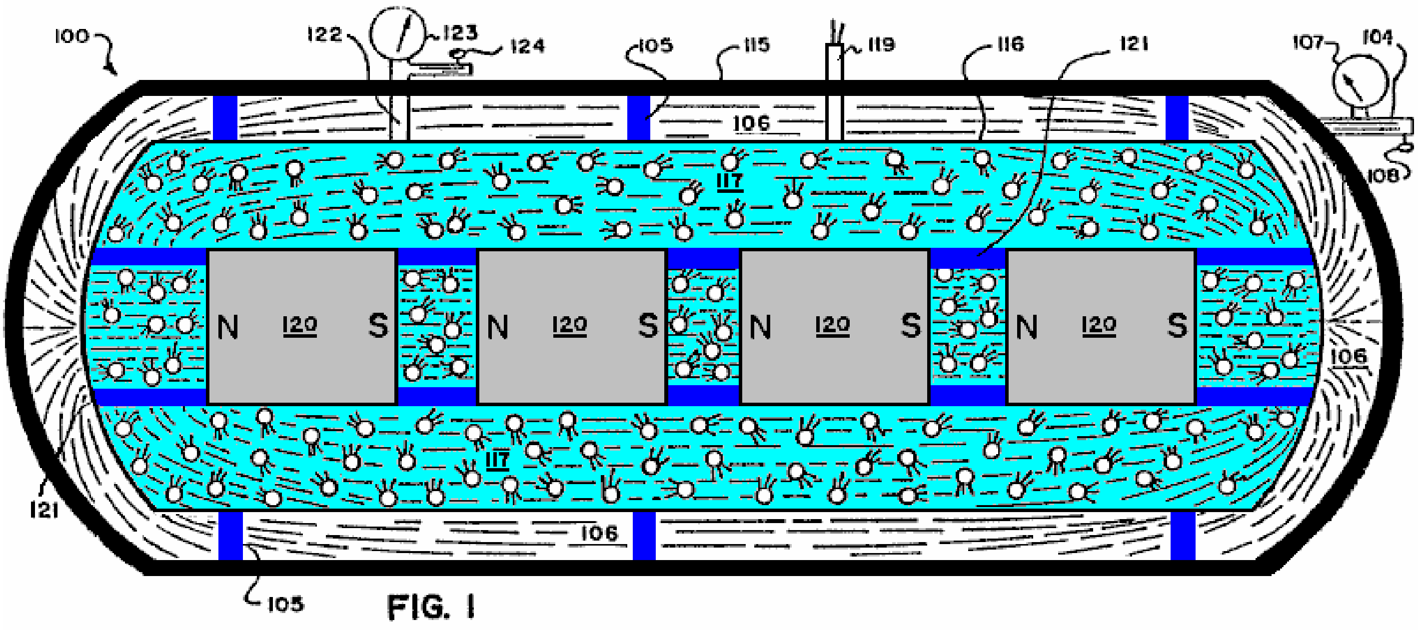

FIG. 1

As illustrated in **Fig.1**, there is provided an electrical current generator **100** comprising an outer keeper housing **115** and an inner, pressure containing, closed housing **116** supported therein by insulating supports **105**. A vacuum exists in the area **106** between the two housings **115**, **116**, which vacuum is regulated and induced by means of the vacuum line **104** with its gauge **107** and its control valve **108**. The outer housing **115** acts as a keeper for magnetic fields of force, and can be made for example of soft iron, while the vacuum in area **106** prevents the leakage or discharge of static electrical charges which might build up on the exterior of the inner housing **116**.

A gas or gas-liquid mixture **117** which may also include solid particles such as for example lead or brass filings, is included within the inner housing **116** surrounding a series of aligned magnets **120** carried by insulating braces or supports **121** and producing a high, combined electromagnetic field. The magnets **120**, which can for example be cryogenic magnets, have their "north" and "south" poles aligned (as illustrated by the "**Ns**" and "**Ss**") so that their magnetic fields reinforce one another.

The level of the gas or gas-liquid mixture **117** in the housing **116** is regulated by means of the line **122** with its gauge **123** and control valve **124**. Electric current output wires **119** are provided and extend down to electrically connect with a wire pick-up system **118** (shown in close-up in **Fig.2**), which can be for example in the form of very small wires forming a closely spaced network or mesh or of a porous conducting metal body or sheet, located in and extended throughout the fluid **117** in the housing **116**.

It is noted that a thimbleful of gas contains a fantastically large number of extremely tiny bodies which are in continuous, random motion moving at extremely high speeds. Hence, the fluid **117** continuously applies a force to the gyroscopic particles (analogous to particles **20**, **30** of **Fig.3**) moving at the speed of light ' in the high electromagnetic field (produced by the magnets **120**) as they continuously collide with each other, which results in the fluid **117** becoming electrically charged. The charged fluid **117** discharges its electrical charge to the pick-up wire network **118** positioned in the fluid, and the electric current so produced and generated is taken off for use via the electrical output wires **119**.

As an alternative to having internally contained magnets **120**, the electromagnetic field needed in the fluid **117** could be produced by a source located outside of the confines of the fluid **117** as long as a significant field was produced within the fluid **117**.

-Second Embodiment (Fig.3)

A further exemplary, generalised embodiment utilising the principles of the system of the present invention is shown in schematic form in **Fig.3**.

The electrical current generator **200** of **Fig.3** comprises an extended member **201** of a special material having its atoms especially aligned to produce electric current when positioned in an electromagnetic field but which does not on its own exhibit any substantial magnetic field outside of its boundary surfaces but substantially contains the field within itself. This is in contrast to "magnetic" materials which likewise have atom alignment but which also exhibit or produce a substantial magnetic field in the area surrounding it.

The generator **200** further comprises for example two magnets **202**, **203**, with their north and south poles facing each other, with the member **201** positioned between them, and with the three elements **201-203** held static with respect to each other. Because of the special nature of the material of the member **201** and its special atom alignment, it will produce a direct current through output line **204** as a result of the gyroscopic actions of the particles of the electromagnetic field **205** produced by the facing magnets **202**, **203**, on the especially aligned atoms in member **201**, which phenomenon occurs even when and even though the member **201** is completely static with respect to the magnets **212**, **203**.

However, it may be desirable in some applications to allow or produce some relative movement between the generator elements **201-203**. The output line **204** extends to an appropriate "load" **206** for using the electrical current generated by the generator **200**. A return line **207** completes the circuit back to the member **201**.

Based on experiments to date, it is believed that brass and lead are materials which can have their atoms especially aligned to interact with the gyroscopic particles (analogous to particles 20, 30) flowing between the magnets 202, 203 and will substantially contain within their surface boundaries the magnetic field produced by the aligned atoms or molecules.

With respect to producing the proper material with atom alignment for the member **201**, it is noted that most materials seem to align their atoms in random directions when formed by conventional methods of production. However, it can be observed that certain materials can be made magnetic by putting the material in an electromagnetic field while cooling from a temperature of around a thousand degrees Centigrade. The magnetism is the result of atom alignment of the material in a given direction (see pages DD19 through DD21 of the Disclosure Document). All materials are affected so as to align parallel or across lines of force when in a powerful electromagnetic-field. Accordingly, if a material while being formed is cooled in an extremely powerful electromagnetic field, the atoms of the material will take a particular alignment. The atom alignment direction could be varied depending on whether the electromagnetic field was aligned with the material or at a ninety degree angle to the material. This would result in the atoms of a material having their particular electromagnetic spin direction primarily along the same axis.

However, merely having atom alignment is not sufficient. Additionally the material for the invention should be such that it exhibits very little if any magnetic field in the area surrounding it. Thus it should be noted that the exterior electromagnetic field that occurs from the atom alignment of the conventional magnet is not duplicated in the material of the invention, because the electromagnetic energy resulting from atom alignment in the material of the invention will be primarily contained within the boundaries of the material It is believed that lead, made superconductive by immersion in a bath of for example liquid helium, is such a special material and could for example serve as the material for member **201**.

This then results in having a material which would place a force at the proper angle on the gyroscopic type particles moving in the electromagnetic field so as to cause an EMF to be produced even when the material was sitting still. (See also first paragraph of page DD23 and paragraphs four, A through E, of page DDl9 of the Disclosure Document).

It is believed that high, contained pressures, as well as other methods, can also probably produce atom alignment as the atoms of a conductor or any material will react to sufficient external force. (See first paragraph of page DD35 of the Disclosure Document). This possibility is also indicated by the fact that hard knocks or impacts will demagnetise a magnet.

The proper procedure of material production in achieving atom alignment with internally contained fields of force will cause the controlled release of electrical energy in electromagnetic fields of force when the material of the invention is placed in the lines of force of the electromagnetic field.

-Third and Fourth Embodiments (Fig.5 and Fig.6)

A. Related Principles

1. Numerous scientific tests and experiments made by the inventor indicate that the magnetic field resulting from an electrical current flowing through a conductor is the result of atom alignment within that conductor at an extremely high speed with an ability to reverse atom alignment just as rapidly without the magnetic hysteresis associated with conventional materials considered "magnetic." Prior to this time it has been believed and taught by the scientific community that the magnetic field associated with an electric current carrying conductor was the result of the electric current itself and not of the conductor material, for example copper, which was considered to be "nonmagnetic." Even the inventor was influenced and mislead by these teachings and attempted to mechanically explain and justify the prior teachings, as is seen on page DD-27 of the Disclosure Document which is an important part of this patent application.

However, as taught in the present invention, what mechanically happens is that the gyroscopic particles making up the electric current moving in a conductor interact with the electromagnetic makeup of the atoms of the conductor, causing them to align extremely rapidly, thereby then releasing some of their electromagnetic make-up in the form of a magnetic field exactly as explained in great detail for conventional magnetic materials in the Disclosure Document.

This is easily proven and understood by taking for example, a size 14-gauge conductor one foot long, winding it into a coil and connecting the coil to a meter and a 1.5 volt battery. The total current registered on the meter will be 1.5 amps and the strength of the magnetic field created from the short conductor will be extremely small. Next, the same type of test is run again but with the length of the conductor increased to for example two thousand feet, but still in a coil. The total current registered on the meter will now be considerably less, but the strength of the magnetic field given off from the conductor will now be extremely large!

This shows that the magnetic field is not from the electric current flow, but is the result of the interactions of the gyroscopic particles which make up the electric current interacting with the atoms of the conductor! This causes the gyroscopic particles of the electric current not to be able to make the circuit back to the battery so quickly, and therefore the meter shows less current used.

The magnetic field is the result of the atom alignment of the conductor. The more atoms in a conductor (up to a point), the stronger the magnetic field produced from a given amount of electric current input. Again, this is proven by changing the diameter of the conducting wires, and, with the lengths being the same, the strongest magnetic field will result from the conductor with the largest diameter. The reason for this is that there are more conducting atoms to interact with the gyroscopic particles of the electric current moving through the conductor, which results in a greater number of conducting atoms being aligned, thereby then releasing some of their electromagnetic make-up, exactly as has been explained in great detail in the Disclosure Document as being possible for all matter.

If the magnetic field produced was strictly based on the amount of current going through a conductor, as taught in the prior art, then the strongest magnetic field would result when current went through a large diameter and short length conductor, because the current flow through the entire circuit is greatest at that time. However, experiments prove that the shorter a conductor is made, the greater the current flow through the entire circuit and the less strength of the magnetic field surrounding that conductor. The longer that same conductor is made (up to a point), the greater the magnetic field surrounding the total mass of the conductor and the less current that makes the complete circuit of the entire system. Reason: more atoms!

2. Numerous scientific tests and experiments made by the inventor also indicate that the magnetic field created when an electric current moves in a conductor does not use up measurable energy when performing obvious or non-obvious work, force or power. This is true no matter how strong or how immense the power of the motor or electromagnets is.

Reason: the magnetic field coming from the conductor is the result of extremely quick atom alignment within that conductor. Therefore the energy in the magnetic field is the energy that makes up the atoms of the conductor! This energy is literally Einstein's equation of E=MC2, and therefore the energy is believed to be moving at the speed of light.

This energy use cannot be measured by today's measuring instruments. This has been explained in great detail in the
Disclosure Document and is believed to be true of all matter!

3. The same is true for the electric current that comes from a conventional battery. The electromagnetic energy coming from the battery is the energy that makes up the atoms of the material of the battery! Again this energy use is not measurable by today's measuring instruments. Electric meters of all types are simply mechanical devices which measure the amount of electric current that comes into that instrument. They do not measure the amount of mass that has been converted into electromagnetic energy.

Present teachings in science state that the electric energy flowing from a battery is used up in the device operated by that flow of electric current. This is not true at all! The electromagnetic energy released from the atom make-up of a battery has a relatively infinite capacity to do obvious work, force, or power.

This is easily proven even with a small motor and a 1.5 volt battery. With a battery connected to motor to operate it and with a meter to take readings, the motor is then physically stopped from turning by physically holding or restraining the shaft. At that moment the motor is performing no obvious work, force or power, but the meter will register a greater flow of current. The magnets of the motor can be taken out and the reading will still be the same. If the electric current was being used to operate the motor, the meter would register more current when the motor was running.

The electric current not only will operate the motor but, once it flows through the complete circuit back to the battery, it also does additional work based on Faraday's Laws of Electrolysis within the battery itself. What has happened is that the electromagnetic energy released from the atoms of the material of the battery once they have completed the circuit, then take a "short cut" and move large pieces of the mass of one material of the battery over to the other material of the battery. The inventor has stated and shown throughout the Disclosure Document that the effect of gravity was the non-obvious effect of electromagnetic energy. Once the materials of the battery have combined, the extreme desire for the two materials to merge is physically reduced. These materials will attempt this merger anyway possible and, if the electric current initially released from a battery is not allowed by mechanical means to complete the circuit back within itself, the electromagnetic energy then in the mechanical means will perpetually (in a relative, theoretical sense) perform obvious work, force or power. The reason: the force which initiated this flow of current (electromagnetic make-up of atoms of material) is constant, similar to hydraulic pressure, with the noticeable exception that it is moving it is believed at the speed of light and will interact with the electromagnetic make-up of the atoms of other materials, causing them to release some of their electromagnetic make-up in the form of a magnetic field. This then multiples the capacity for doing obvious or non-obvious work, force or power, which can then react with another conducting coil or with the electromagnetic energy within the magnetic field of a conventional magnet and multiply this effect even further, and on and on and on for a relatively unlimited source of energy.

The same is true in not letting the current get back to a conventional generator. If a mechanical means is set up so that the electric current is "trapped," without completing a circuit, the gyroscopic particles of the current have a capacity for continuous work without increasing the power input into the generator system. However, if the circuit is complete and the electric current moving in the system does absolutely no obvious work, power or force, the gyroscopic particles making up the current on getting back to the generator will then increase the need for more power input into the system. Reason: the opposing effect of magnetic fields as defined in Lentz’s Law. This law is simply an observation of this effect, which before now has never been fully understood.

4. Numerous scientific tests and experiments made by the inventor also indicate that there is a correlation between the electromagnetic spin orientation of the atoms of non-conductors, semi-conductors, and conductors, and the varying results achieved with an electric current in attempting to move through these materials, or when moving these materials through a magnetic field attempting to induce electric current. The property of resistance to electric current movement is generally speaking the same type factor already explained above for electric current producing a magnetic field when moving in a conductor.

The gyroscopic particles in a moving electric current interact with the atoms of the material through which the current is moving. Each atom can efficiently only interact with sun exact maximum amount of electric current, and, if exceeded, there is an interruption of orderly movement. Then the angle of release of the gyroscopic particles from the atoms are such that the electromagnetic release from those atoms are in the form of heat, exactly as explained in great detail in the Disclosure Document. This effect is easily observed by the fact that resistance decreases relative to an increase of the cross-section of the material. Reason: simply, more atoms within that given area, and, for a fixed input of electric current, there are more atoms to receive and interact efficiently with the gyroparticles making up the electric current.

Again the same is true for resistors designed for deliberately producing heat. Such resistors are not materials which are considered good conductors of electric current. It is stated and shown in great detail in the Disclosure Document that the electromagnetic spin orientation of the atoms of a non-conductor are different from that of conductor atoms, and therefore different results will occur from the same inputs of electromagnetic energy.

This is easily seen by the fact that, in a resistor, for a given amount of electric current input, the heat release increases as the diameter increases. What that means is that the property of resistance has decreased. On a conductor it is just the opposite. If the diameter is increased the resistance is decreased, but so is heat release. Again, this is an indication that the gyroparticles in the electric current movement interact with each atom of the material. This same effect shows up again in conventional electrical induction from a conductor interacting with a magnetic field. Experiments by the inventor have indicated that the property of conventional induction is the result of the same property of resistance.

If one increases the diameter of a conductor, lengths staying the same, one decreases the amount of electric current produced relative to the total number of atoms within the conductors under consideration. Or, if one takes a given number of wires of the same diameter and length, and moves a magnet across them, the current produced will be considerably less, than if one takes the same diameter wire, but only one wire, and increases its length considerably and then forms it into a coil forming the same number of wires on any one side and then moves the same magnet across only one side of that coil, the electric current generated will then be considerably greater. Reason: the property of resistance. This is the mechanical effect within the gyroscopic electromagnetic make-up and orientation of the atoms of all materials which have the mechanical ability to perform a given task efficiently up to a point concerning input of additional electromagnetic energy and then mechanically causes varying results once this threshold is exceeded.

This and all the other thoughts and innovations in this and the previous disclosures of the previous applications and the Disclosure Document previously put forth show that there are many different mechanical ways to release a relatively unlimited source of energy from electromagnetic energy which makes up all matter and which results from this invention.

B. Working Prototypes

Fig.5 and **Fig.6** illustrate rough, working prototypes of this aspect of the invention. These embodiments are only relatively inefficient prototypes built by hand for the purpose of demonstrating the invention. It should be self-evident that the prototypes, by various mechanical means and designs, can easily be made extremely efficient and the illustrated embodiments are being presented only for general, representational purposes.

As is illustrated in **Fig.5**, there is provided a combined electrical current generator and an electromagnetic motor comprising a rotatably mounted, permanent magnet **200**, a battery **201**, brushes and commutator **202**, bearings **203** and power, mounting shaft **204**, and a first, primary, magnetic producing coil **205** and a second, secondary electric producing coil **206**. The two coils **205**, **206** are juxtaposed together in parallel disposition with concurrent core centre-lines, with the magnet 200 positioned alongside of coil **205** at or near its core centre-line with the rotational axis of the shaft 204 positioned orthogonally to the centre-line.

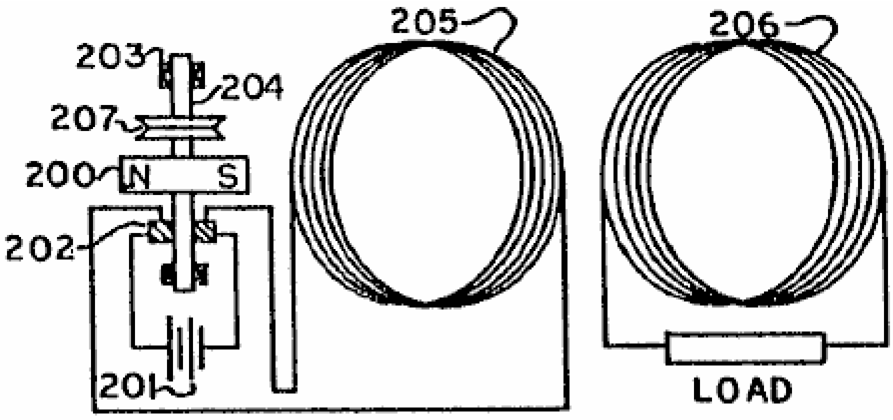

FIG 5

In the prototypes a very small battery **201**, for example, size "N", of 1.5 volts is used. When the circuit is completed, the battery **201** converts an immeasurable amount of its mass into electrical current (gyroscopic particles moving at the speed of light) which goes out through the communicator and brushes **202**, and then enters magnetic producing conductor coil **205** made, for example, from insulated 14-gauge or 15-gauge copper wire, with the total weight of the coil **205** being for example seventy to ninety pounds. This causes the atoms of coil **205** to align extremely fast then releasing some of their electromagnetic make-up (gyroscopic particles) in the form of a magnetic field. This field then interacts with the gyroscopic particles making up the magnetic field coming from the atoms of the material of the permanent magnet **200**.

This causes magnet 200 to attempt to align its magnetic field movement with the magnetic field movement coming from the atoms of coil 205, resulting in rotation of magnet 200 and the shaft 204 to which it is attached. This then changes the position of the commutator and brushes 202 relative to each other's initial positions, which then causes the electric current coming from battery 201 to be going in the opposite direction into coil 205, causing the atoms of coil 205 to extremely quickly reverse their alignment and the polarity of their magnetic field which they are emitting. The reversed field then interacts again with the magnetic field of permanent magnet **200**, causing it to further rotate.

This process is then continuously repeated, producing continuous rotation of the shaft **204** which can be used as a source of motive power in many different ways. A power belt wheel **207** for example using a continuous "V" belt is illustrated as a general representation of this motive power source for producing useful, obvious work. In a prototype test run with a small 1.5 volt, type "N" battery, the shaft **204** and the magnet **200** - rotated at a high speed for approximately twelve hours before running down. By improving the particular design features of the prototype and by using longer lasting batteries, the rotation time of the shaft **204** can be greatly increased to a theoretical point approaching "perpetual" for all practical purposes. At the same time the alternating magnetic field produced by the coil **205** induces into coil **206** electrical induction, which then causes coil **206** to produce an alternating current across its "load," which current can be made to exceed the conventional output of the battery **201**. The battery source **201** can be replaced when needed.

It is very important to understand that, the longer the length of the conducting wire in coil **205**, the stronger will be the magnetic field produced and the less electric current that will complete the circuit and get back into the battery and destroy the mechanical source of the electrical current. This effect can be increased further by increasing the diameter of the conducting wire in coil **205** and then greatly increasing its length still further in the coil.

Reason: The gyroscopic particles making up the electric current interact with the atoms of coil **205**. The more atoms in coil **205**, relative to it's length, the longer it takes the gyroparticles of the electric current to influence them and exit from the other end of the coil. It is then easily seen that if the direction of the current flowing into coil **205** is then reversed, this then further increases the lag time. Reason: The gyroscopic particles have inertia and are believed to be moving at the speed of light and they are interacting with the gyroscopic particles making up the atoms of the conducting coil **205**. These atoms also have inertia, and when the direction of current in coil **205** is reversed, the incoming current then collides with the current already in coil **205** going in the opposite direction.

This causes a brief hesitation during the time the current already in the coil is being forced to reverse its direction, thereby then reversing the direction of the atoms within coil **205** which have already been influenced to become aligned. This causes a constant force throughout the circuit, but does not allow very much current to get back into the battery **201** to destroy the mechanical means which initiated the release of electric current in the first place.

Therefore, it should be further understood that, the faster the current direction reverses into the coil **205**, the more efficiently the matter of battery **201** is converted into 2 pure electrical energy ($E=MC^2$), without destruction of the mechanical situation that initiates the electrical current release.

It is also important to understand that, the stronger the magnetic field coming from the mass of magnet **200**, the greater will be its rotational speed. Additionally, the greater the magnetic field coming from the mass of coil **205**, the greater will be the rotational speed of magnet **200**, and, up to a point, the greater the electric current input from battery **201**, the greater the rotational speed of magnet **200**.

Reason: the greater the electric current flow into coil **205**, the greater will be the percentage of the atoms making up coil **205** that are aligned. This probably has the same relationship as does achieving atom alignment in conventional magnetic materials. Once complete atom alignment is reached in coil **205**, no amount of current will cause those atoms to increase the strength of the magnetic field emitting from those atoms.

Therefore, it should be clear that, for a given input of electric current from battery **201**, the most efficient design is one in which the most atoms of coil **205** are influenced to atom alignment by that given electric current, which means increasing the diameter and the length of the conducting wire of coil **205** to the point that the strength of the magnetic field produced is sufficient to cause rotation of the magnet **200** to a speed that allows none or at least very little of the electric current which initially comes from the battery **201** to complete the circuit and get back into battery **201** and destroy or reduce the mechanical effect which induced the conversion of the matter of battery **201** in electric current in the first place. Again this desired effect can be increased by increasing the strength of the magnetic field given off by the atoms of the permanent magnet **200**.

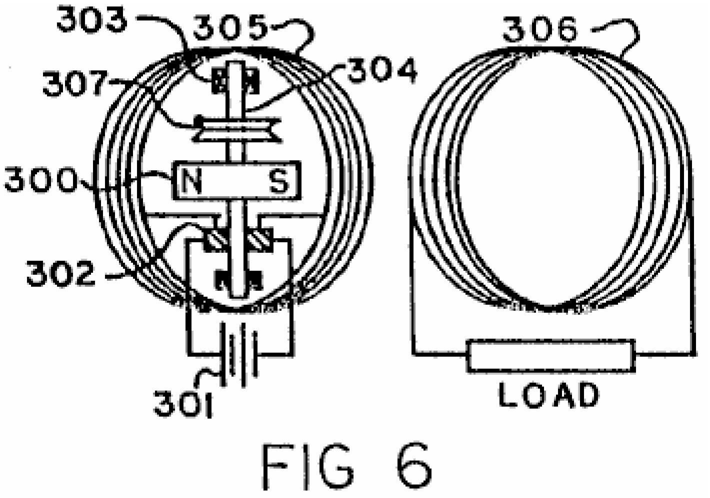

FIG 6

In the second prototype embodiment of **Fig.6**, the structure and operation of the prototype is substantially identical to that of **Fig.5** with the major exception being that the magnet **300**/shaft **304** elements (and related sub-elements **302**, **303** and **307**) are positioned inside of and within the core of the primary coil **305**, as compared to the placement of the magnet **200**/shaft **204** elements next to and along side of the coil **205** of **Fig.5**. Therefore, for brevity, a detailed description of the elements of **Fig.6** will not be repeated, but it is noted that the corresponding and analogous elements and sub-elements are similarly numbered in **Fig.5** and **Fig.6**.

It is also important to again stress the fact that the prototype designs shown are presented simply to prove the correctness of the invention, and it should be clear that the invention can be made extremely more efficient by utilising all of the magnetic field produced by coil **205** and designing the magnet **200** of a shape and strength that efficiently interacts with the majority of the magnetic fields from coil **205**. The illustrated prototypes is relatively highly inefficient in this regard, but even so, the results of the invention itself greatly exceed the prior art as to use of electric current from whatever source and interaction with an electric motor or whatever work was conventionally performed.

The applicant feels it is very important to again stress, in building many varying designs of this invention, consideration must be given to the fact that the Energy in the field of force of any type magnet is the Energy that makes up the Atoms of the material from which it comes! This Energy is a real Entity with, it is believed, a gyroscopic action. It is literally Einstein's Equation of $E=MC^2$ and it is believed that this Energy moves at the speed of light and makes up all Matter. And that this Energy has a constant pressure effect back to the Atoms of the material from which it came, similar to hydraulic pressure. This effect is additionally more fully understood by stating the following results obtained from experimentation by the applicant in the process of this invention.

a) When the system is initially attached to a 1.5 volt size N Battery **201** or **301** and the magnet **200** or **300** and related rotation entities are placed close to or in the centre of coil **205** or **305**, the following results are observed:

If the electric current produced in coil **206** (**306**) is then fed back into coil **205** (**305**) in accordance with proper polarity, the rotation speed of magnet **200** or **300** will then accelerate. If fed back into coil **205** (**305**) in wrong polarity, the rotation speed of magnet **200** (**300**) will slow down.

This proves that the total force from coil **205** (**305**) interacting with the magnet **200** (**300**) is greater when the electrical energy from coil **206**(**306**) is fed back into coil **205** (**305**), then when only the initial electric energy from battery **201** (**301**) is fed into coil **205** (**305**)! When two or three batteries are electrically connected together in series, so as to create for example three or four and a half volts of electrical input, this effect is multiplied. Remember, up to a point, the greater the electrical input, the greater the percentage of atom alignment within coil **205** (**305**).

This further proves that the electric current produced in coil **206** (**306**) is a result of the gyroscopic particles of Energy released from the magnetic fields which came from the Electromagnetic make-up of the atoms of coil **205** (**305**), and is not part of the initial Electrical Energy released from the atoms making up the materials of battery **201** (**301**)! The coil **206** (**306**) can be taken out of the system, or its electrical current fed away from the system, and the rotational speed of the magnet **200** (**300**) will not observably change. However, the rotational speed of magnet **200** (**300**) will noticeably change when the electric current from coil **206** (**306**) is fed back into coil **205** (**305**)!

Now a different result:

b) When the electric current from battery **201** (**301**) becomes weaker to the point that the magnetic field coming from coil **205** (**305**) has weakened and shrunk allowing the magnetic field of the rotating magnet **200** (**300**) to expand and then noticeably induce electric current into coil **206** (**306**) and into coil **205** (**305**), then reverse results are observed. When the magnetic field from the coil **205** (**305**) is large, then the magnetic field from magnet **200** (**300**) is retained! If coil **206** (**306**) is then short circuited, the rotation of magnet **200** (**300**) will noticeably slow down.

If electric current from coil **206** (**306**) is fed back into coil **205** (**305**) in wrong polarity, the rotation of the magnet **200** (**300**) will stop. If fed back into coil **205** (**305**) in correct polarity, the rotation of the magnet **200** (**300**) will slow down. At that point, the rotation of the magnet **200** (**300**) will not accelerate, no matter how connected!

These results show that, at this time, the magnetic field from magnet **200** (**300**) noticeably induces a current in coils **206** (**306**) and **205** (**305**) which opposes the rotation of the magnet **200** (**300**). This effect has already been mechanically explained, and it has been shown that Lenz's Law was simply an observation of that mechanical explanation. These results further demonstrate that the expanding and collapsing magnetic fields from coil **205** (**305**) and **206** (**306**) do not noticeably effect each other detrimentally.

Because the resulting magnetic fields from all the coils are the results of fluctuating atom alignment within the coils! Remember, the gyroscopic energy particles making up the magnetic fields have a hydraulic pressure effect back to the atoms from which they came. Also remember that the atoms making up the material of the permanent magnet **200** (**300**) are stationary as to atom alignment direction! Therefore, the pressure effect resulting from an opposing field which the magnet **200** (**300**) induced, is immediate. As is Hydraulic Pressure.

However, the magnetic field emitted from the atoms of coil **205** (**305**) relative to induction into the atoms of coil **206** (**306**) are fluctuating and out of step, so to speak, and therefore, in harmony with each other. The pressure effect from the induction of coil **205** (**305**) into coil **206** (**306**) is an action and reaction effect which reinforces the flipping action of the atoms of coil **205** (**305**) and back into the atoms of coil **206** (**306**).

This action is again seen when the invention is hooked into one-hundred-fifteen volt alternating current, and battery **201** (**301**) is not used. The magnet **200** (**300**) will not rotate even though the magnetic field from coil **205** (**305**) is strong and is alternating. Reason: The fluctuating magnetic field is so fast, that the inertia mass of magnet **200** (**300**) can not get started in one direction before the magnetic field from coil **205** (**306**) has reversed, thereby, causing magnet **200** (**300**) to vibrate only microscopically at sixty cycles per second. And, if a sixty watt bulb is hooked into the system of coil **205** (**306**), it will only light dimly. And there is a lag time of two to three seconds before it lights even dimly.

If then coil **206** (**306**) is hooked to a meter, there is a reading of forty-nine volts, and if the meter is replaced by another sixty watt bulb it will light only extremely dimly. However, the sixty watt bulb hooked to coil **205** (**305**) will now become noticeably brighter! This again shows that the action and reaction results of the atoms of the coils are not noticeably detrimental to each other. Because of the lag time (out of step, so to speak), resulting in reinforcing the flipping atom alignment of the coils.

From this further explanation of the invention it is seen that desirable results may be obtained by the following:

For example, in **Fig.6** the magnet **300** may be of a design and/or be located at a distance from the inside diameter of coil **305** and coil **306**, whereby the majority of the magnetic field from the magnet **300** does not cut the conducting loops of coil **305** or **306**. Yet the alternating magnetic field produced by coil **305** should efficiently have the majority of its gyroscopic particles interacting with the majority of the gyroscopic particles making up the magnetic field of the permanent magnet **300**, but not directly reacting with the atoms making up coil **305**, or magnet **300**!

When the magnetic lines of force of the magnet **200** (**300**) cross at right angles with the conducting wires of coil **205** (**305**), **206** (**306**), a braking action is incurred. It should be noted that, as the inner diameter of coil **205** (**305**) increases, the percentage of time of braking effect decreases.

Along this same line of instruction, the commutator segments **202** (**302**) can be made of a large diameter and the area of brushes made small, whereby, when the brushes cross over the gaps in the commutator segments, there will be no short circuit at any time directly back to the battery **201** (**301**).

By combining the slip rings and brushes (the slip rings can be made of a small diameter) to the side or sides of the brushes and commutator segments **202** (**302**), then battery **201** (**301**) does not have to rotate with magnet **200** (**300**).

The 14-gauge and 15-gauge insulated copper wire weighing seventy and ninety pounds respectively (31.5 kilograms and 40.5 kilograms) used for the motor coil **205** (**305**) and the generator coil **206** (**306**), respectively, in the first hand-made prototypes of the embodiments of **Fig.5** and **Fig.6**, for demonstration purposes only, come in standard buckets of varying weights from wholesale outlets.

It was then wound in coils as shown, and, as taught, the more conducting wire used, the better the results. The magnets **200** and **300** were each initially about a 2.5 inch (6.25 centimetre) cube and can be any size and strength desired.

In a further, rough, hand-built, demonstration, working prototype of the invention of the type illustrated in **Fig.6**, the primary or motor coil **305** was made of 5-gauge copper wire in a single, continuous wire, weighing approximately 4,100 pounds (1,845 kilograms) with a coil loop diameter of 4.5 feet (135 centimetres), while the secondary or generator coil **306** was made of 24-gauge copper wire in a single continuous wire weighing approximately 300 pounds (135 kilograms) with the same, approximate coil loop diameter of 4.5 feet (135 centimetres), with both coils **305**, **306** coincidentally forming a cylinder of approximately 30 inches (75 centimetres) in length. The coils **305**, **306** were built around a cylindrical, fiberglass core body of approximately 200 pounds (90 kilograms) having a vertical, longitudinal centre-line axis.

The rotating magnet **300** was made up of six, separate, parallel cylindrical magnetic columns spaced and disposed about the periphery of a hollow cylindrical fiberglass surface of approximately twenty inch (fifty centimetres) in diameter. Each column was 30 inches 75 cm.) long and was composed of a stack of 70, individual ceramic ring magnets in disc form as made by Jobmaster Magnets of Randallstown, Maryland, 21133, U.S.A. Each disc had a thickness of seven-sixteenths of an inch (1.09375 centimetres), an inner diameter of 1 inch (2.5 cm.) and an outer diameter of 4 inches (10 cm.). The discs were stacked and secured together in 4 inch (10 cm.) diameter fiberglass tubes longitudinally mounted on the inner surface of the twenty inch (fifty cm.) diameter fiberglass cylinder.

The composite magnet **300** had a total weight of approximately 400 pounds (180 kilograms) and a total length of 30 inches (75 cm.) and an approximate diameter of 20 inches (50 cm.).

The magnet **300** was mounted for rotation on a horizontal shaft **304** extending across the hollow core of the coils **305**, **306** crossing through the centre point of the longitudinal centre-line of the cylinder and orthogonally to the longitudinal centre-line of the magnet **300** for rotation within the open centre area of the cylindrically disposed coils **305**, **306** with the longitudinal centre-lines of the coils being vertically disposed.

With a D.C. battery source **301** of two 12 volt lantern batteries and seventeen 6 volt lantern batteries all in series (totalling 126 volts), a measured voltage of 126 volts and a measured current of 99 milliamps in the primary coil **305** were noted. Concurrently a voltage reading of 640 volts and an amperage measurement in excess of 20 milliamps were noted in the secondary or generating coil **306**, with the magnet **300** rotating at a speed of 120 revolutions per minute (rpm). Thus the system was outputting and producing in the generating coil **306** usable electrical energy in excess of 102% of that being inputted in the motor coil **305**! This excess useful electrical energy, of course, is in addition to the further useful mechanical energy available at the exemplary drive take-off **307** on the rotating shaft **304**, on which the 400 pound, 30 inch long magnet **300** was rotating at 120 rpm!

Thus the invention, by utilising the energy of the gyroscopic particles in the magnetic field, produces a greater energy output than the energy input into the system, thus producing results beyond presently accepted scientific teachings of the world.

This prototype achieves exactly what has already been described in great detail in applicant's prior patent applications. There was simply used in this prototype a stronger magnet and a larger diameter conducting wire of great length, that has a considerably greater number of atoms aligned when current is put into the system, and used a greater number of atoms in the generator coil of fine diameter conducting wire.

While the results of the energy released from this particular prototype is highly impressive to others, the applicant still has only scratched the surface of the energy that can be released using the principles of the present invention.

Again, as has already been stressed, the most efficient design, is one in which the least amount of input of current causes the greatest amount of atom alignment.

These data do not constitute any departure from applicant's previous work, but is only to further document that which has already been stressed in the prior patent applications.

Varying the D.C. voltage for the battery source **301** shows that obvious efficiency will continue to rise as the voltage input goes up! Also, the leverage factor advantage of the invention, combined with the inertia of the 400 pound magnet **300** rotating at 120 rpm (even while causing the electrical generator to put out over 100% of energy input) proves the invention to be greatly over 100% efficient even at this slow rpm.

It is contemplated that the next prototype will use super-conducting type material for the coil **305** with a magnet **300** having a magnetic field strength comparable to that of crycogenic-type magnet relative to percentage of atom alignment or size. This will result in the size of the device being much smaller and yet with the available work output being much greater than the prototype just described. Reason: The most efficient type design is one whereby the least amount of current input into the motor coil produces the greatest atom alignment of said motor coil and having rotatable magnet also comparable in strength, relative to size.

The invention can be made without using the coil **206** (**306**) and producing just useful mechanical energy.

Coil **206** (**306**) can be merged or wound with coil **205** (**305**).

The magnet **200** (**300**) can be an electromagnet, a permanent magnet, a cryogenic magnet or any magnet.

The design of magnet **200** (**300**) can create a strong but retained magnetic field.

The design of coil **205** (**305**) can be used to further retain the magnetic field of magnet **200** (**300**).

Alternating current (A.C.) can be used in place of the direct current (D.C.) battery **201** (**301**), if the magnet **200** (**300**) is designed accordingly.

The coils **205** (**305**) and **206** (**306**) may be made up of several coils rather than a single coil.

The magnet **200** (**300**) may be made up of several individual magnets rather than from just a single magnet.

From the foregoing it should be understood that, unlike the teachings of the prior art, the following is desired in the design of the coil **205/305** under the principles of the present invention:
a) Current initially flowing into and through the coil should be small compared to the energy output of the system;
b) A relatively large diameter wire or its equivalent is used for the coil;
c) A relatively large number of coil loops or coils is used;
d) A relative long, continuous length of coil wire or its equivalent is used; and
e) The greatest magnetism for a given mass of the magnet **200**/**300** is desired but may be designed so that the magnetic lines of force will not cut the coils at a right angle.

The present invention applies to any mechanical device which is operated by electrical energy. In accordance with the principles of the present invention, the mechanical device should be designed wherein the electric current as much as is feasible cannot get back to its source, but the circuit is completed whereby the "pressure force" is constant throughout the system.

What has been invented, built and disclosed is an invention of immense importance to the well-being of the entire world. There will be many devices built from what has been shown and taught. It should now be known that all matter is made up of electromagnetic energy and that there are many mechanical ways to release this energy, as has been stated throughout the five prior, related patent applications hereof and the Disclosure Document. All of these future developments will be as a result of the present invention which - releases energy above and beyond conventional energy release mechanisms, prior to this invention.

Some of the basic approaches of the invention are outlined below:

l. Any device which utilises a means by which the electric current (electromagnetic energy) is retained within a member or members outside of the source of said original electric current and then, as a result thereof, is capable of producing a continuous electromagnetic motion or current if so desired beyond present scientific teachings.

2. Any device which releases the electromagnetic energy make up of matter to such an impressive degree as does this invention that it defies several of the present accepted laws of physics and electrical engineering as of this time.

3. That the energy release is noticeably higher and in some cases more controllable than the conventional means of energy release of this time.

Because many varying and different embodiments may be made within the scope of the inventive concept taught here, and because many modifications may be made in the embodiments detailed here in accordance with the descriptive requirements of the law, it is to be understood that the details given above are to be interpreted as illustrative and not in any limiting sense.

CLAIMS

1. A usable energy generation system, comprising:

usable energy output means for making available for use the usable energy generated in the system; and
usable energy generation means associated with said output means and designed to take into account the reaction to a force of the gyroscopic type energy particles and to utilise the gyroscopic type energy particles moving in a magnetic field for producing usable energy of an amount greater than the amount of energy input.

2. The system of Claim 1, wherein said generation means includes structural means for placing a force at an angle to the gyroscopic particles causing the particles to follow paths having a net directional effect, producing electric current flow.

3. The system of Claim 2, wherein said structural means comprises magnetic means and a closed housing associated therewith containing a fluid in the magnetic field produced by said magnetic means, said fluid becoming charged as a result of its interaction with the gyroscopic type energy particles making up said magnetic field.

4. The system of Claim 3, wherein said magnetic means is a series of aligned magnets positioned centrally within said housing but electrically insulated therefrom.

5. The system of Claim 3, wherein there is included a further, keeper housing completely surrounding said closed housing and electrically insulated therefrom, said keeper housing tending to keep and concentrate the magnetic field produced by said magnetic fields within it.

6. The system of Claim 3, wherein said output means includes a network of metallic surfaces immersed in said fluid to pick up the electrical charges on said fluid.

7. The system of Claim 2, wherein said structural means comprises a member having its atoms aligned to produce a net magnetic field which is at least substantially contained within the surface boundaries of said member.

8. The system of Claim 7, wherein said member is positioned in operative association to at least one magnet, and said member and said magnet are held static with respect to one another.

9. The system of Claim 1, wherein:
The usable energy generation system comprises an electrical energy generation system; said usable energy output means comprises an electrical power output means; and said usable energy generation means comprises electrical energy generation means.

10. The system of Claim 1, wherein:
the usable energy generation system comprises usable motion generation system; said usable energy output means comprises usable motion output means; and said usable energy generation means comprises usable motion generation means.

11. The system of Claim 1, wherein said generation means includes:
a magnetic device;
a source of electrical energy;
complete electrical circuit means between said magnetic device and said source of electrical energy for producing an alternating electrical current potential; and
current retarding means for retarding the flow of current through said device back to said source to the greatest extent practical, producing a relatively small and preferably negligible current flow through said source.

12. The system of Claim 11, wherein said magnetic device includes at least one relatively large coil of wire having a relatively large number of turns of wire of a relatively large diameter and a relatively great length.

13. The method of producing usable energy utilising a magnetic field system, comprising the following steps:
a. providing a structure interacting with a magnetic field; and

b. arranging said structure to utilise the energy of the gyroscopic type particles in the magnetic field to generate an electrical current in said structure, or usable motion from said system, or both, and results in producing a greater energy output than energy input into the system.

14. The method of Claim 13, wherein there is included in step "b" the further step of arranging said structure to place a force at an angle to the gyroscopic particles cause the particles to follow paths having a net directional effect, producing electric current flow, without any normal, visible movement taking place in the system.

15. The method of increasing the availability of usable electrical energy or usable motion, or both, comprising the steps of:
a. providing a magnetic device for producing usable electrical energy or usable motion, which device includes a material through which electrical current can interact producing a magnetic field which interacts with a separate mass having a magnetic field, and further providing a source of electrical energy such as for example a battery, generator, or any other;
b. providing a complete electrical circuit between said magnetic device and said source of electrical energy and producing from said source to said device an alternating electrical current potential; and
c. retarding the flow of current through said device back to said source to the greatest extent practical, producing a relatively small and preferably negligible current flow through said source and resulting in electrical energy output, or usable motion output, being a greater energy output than energy input into the device.

16. The method of Claim 15, wherein step "c" is achieved at least in part by the step of providing in said device a relatively large coil or coils of wire having a relatively large number of turns of wire of a relatively large diameter and a relatively great length.

17. The method of Claim 15, wherein step "c" is achieved at least in part by the step of utilising a means by which the electric current is retained within at least one member outside of the source of said original electric current and then, as a result thereof, is capable of producing a continuous electromagnetic motion or current.

18. The method of claim 15, wherein there is included the step of providing a separate magnetic source positioned so that its magnetic lines of force avoid significantly cutting the material through which the electrical energy flows avoiding a braking effect which would retard the desired motion of said magnetic source.

19. The method of Claim 15, wherein step "a" is achieved by said material being a super conducting material and said separate magnetic mass is at least equivalent to a cryogenic magnet.

20. The method of Claim 15, wherein step "a" is achieved by the step of having said material a conducting material and said separate magnetic mass of any desired configuration or strength or type.

21. The method of increasing the availability of usable electrical energy, or usable motion, or both, comprising the steps of:
a. providing a magnetic device which has a material mass into which an electrical current is introduced, by any desired means, which results in causing pertinent atom alignment, within said material mass, thereby releasing some of the electromagnetic energy making up the atoms of said material mass, in the form of a magnetic field, which then causes the gyroscopic type energy particles of said magnetic field to then interact with the gyroscopic type energy particles making up a magnetic field coming from the atoms of a different material mass; and
b. having the magnetic device then cause a release of electrical current or usable motion or both through at least one power outlet and resulting in producing a greater energy output than energy input into the device.

22. The method of Claim 21, wherein the material mass or masses are made of a material or substance that allows for extremely fast atom alignment, without the delay, or conventional degree of hysteresis losses normally associated with conventional iron atom alignment.

23. A device which increases the availability of usable electrical energy or usable motion, or both, by causing the atoms of a material or materials to release some of their magnetic energy makeup in the form of a magnetic field, consisting of gyroscopic type energy particles which make up the atoms of the material from which the magnetic field comes; and
a properly designed mechanism, or power output arrangement being place to utilise the energy of said gyroscopic type energy particles, causing a release of energy output greater than energy input without producing radioactive material.

24. A device which increases the availability of usable electrical energy or usable motion, or both, from a given mass or masses by a device causing a controlled release of, or reaction to, the gyroscopic type energy particles making up or coming from the atoms of the mass or masses, which in turn, by any properly designed system, causes an energy output greater than the energy input.

25. A system including an energy generator, motor, etc.

of any design or mechanism that takes into account- the reaction to a force of the gyroscopic type energy particles moving in a magnetic field at tremendous speeds which releases greater output than energy input.

26. The system of Claim 25, wherein a small input of electrical current into the mechanism causes extremely quick and high atom alignment, resulting from using a super conducting material, thereby creating a powerful magnetic field, whereby its gyroscopic type energy particles then interact with the gyroscopic type energy particles coming from a second powerful magnetic field and results in producing a greater output of energy than input of energy into the mechanism.

27. The system of Claim 25, wherein a structure is arranged, whereby, there is, or will be, a pressure, or force, exerted on or in said structure, thereby causing the atoms of said structure to react to said pressure or force, and as a result take a pertinent atom alignment direction that results in said atoms of said structure then causing the gyroscopic type energy particles moving in the magnetic field to be generally deflected in the same direction through said structure, which results in usable electric current flow, producing a greater energy output, than energy input into the system.

28. The system of Claim 25, wherein a rotary magnetic mass is designed to react to a reversing magnetic field of another mass, and said reversing magnetic field can not reverse any faster than the atoms of said other mass can flip and realign; said rotary magnet mass being made as long as is practical to adjust to this requirement, wherein the distance of the arc of circle travelled by the ends of said rotary magnet mass is great; great leverage from said reversible magnetic field of other mass being applied to said rotary magnet, and in addition the increased distance of arc travelled by the ends of rotary magnet before the magnetic field of said other mass reverses, greatly increasing the time in which a maximum force is exerted by the gyroscopic type energy particles moving in the magnetic field coming from the maximum number of atoms aligned in said other mass, thereby causing a longer time of acceleration of said rotatable magnet mass before the atoms of said other mass are required to reverse.

29. The method of producing usable energy, comprising the following steps:

a. imputing energy into a device from an external source;
b. having electrical current flow within said device; and
c. utilising the internal electromagnetic energy of at least some of the matter in the device to add to the energy being imputed into the device from the external source to produce useful energy for use outside of the device having an amount greater than the energy being imputed to the device.

Patent US 4,041,465 27th September 1977 Inventor: Philip S. Brody

Assignee: The Unites States of America as represented by the Secretary of the Army

FERROELECTRIC CERAMIC DEVICES

This version of the patent has been re-worded in an attempt to make it easier to read and understand. The original can be examined at www.freepatentsonline.com and downloaded without charge. This patent covers several different applications, namely; a high-voltage very high-efficiency solar electric device, a photovoltaic memory device, an optical display device and a high-voltage battery, to name just a few. It should be noted that this patent is assigned to the US Army. In my opinion, that lends weight and credibility to this patent. It is claimed that a one centimetre square piece of this material can produce 1,500 volts as opposed to less than one volt using conventional solar cell materials.

ABSTRACT

A method and apparatus is disclosed by which high voltage and current can produced by a polycrystalline ferroelectric ceramic material in response to incident light. Numerous applications of the ferroelectric ceramic material taking advantage of such properties thereof are further disclosed. The polycrystalline ferroelectric ceramic material is initially poled by the application of a pulse of voltage of predetermined magnitude and direction. After being poled in such fashion, light shining on the various surfaces of the ferroelectric ceramic material will generate a consistent high voltage between the surfaces of the ferroelectric ceramic material. If electrodes are attached to the material, then a current will be generated and a load can then be powered by it. Importantly, the magnitude of the voltage produced by the light is directly proportional to the remanent polarisation of the ferroelectric ceramic material, and is further directly proportional to the length of the material, the polarity of the high voltage being dependent upon the polarity of the remanent polarisation and being capable of being reversed when the remanent polarisation is reversed. The open circuit voltages produced by the ferroelectric ceramic material are orders of magnitude higher than those which typically have been produced in the prior-art through the utilisation of standard photovoltaic materials.

DESCRIPTION

BACKGROUND OF THE INVENTION

This invention generally relates to solid state devices exhibiting photovoltaic effects and is particularly directed to the provision of a device consisting of a class of polycrystalline ferroelectric ceramic materials which have been discovered to produce voltages upon the application of light. These voltages are many orders of magnitude higher than voltages typically produced by conventional photovoltaic materials.

Initially, and as background, the instant inventive apparatus and techniques to be discussed below are to be clearly distinguished from the photovoltaic effect now know in the prior-art in that the mechanism for the effect to be discussed herein appears to be unique and different from photovoltaic mechanisms previously described.

SUMMARY OF THE INVENTION

It is the primary objective of the instant invention to provide a device and technique by which extremely high voltage can be generated utilising a solid state polycrystalline class of materials upon the application to such materials of incident light, the voltage generated exhibiting properties entirely unlike the well-known photovoltaic effect of the prior art and of orders of magnitude higher than voltages previously obtainable.

Another equally important objective of the instant invention is the provision of apparatus utilising ferroelectric ceramic materials of the type to be described below, such apparatus taking advantage of the unique properties as discovered to be existent in the class of materials to which the instant invention relates.

These broad objectives, as well as others which will become apparent as the following description proceeds, are implemented by the subject invention which utilises at its heart a class of materials known as ferroelectric ceramics, and which take advantage of the unique photovoltaic properties discovered to be existent in such class of materials.

Specifically, by illuminating the surfaces of these materials, a steady voltage results across conducting electrodes placed in contact therewith. Currents can then be drawn through loads placed across these electrodes. It has been discovered that an arrangement of an initially polarised ceramic material with electrodes attached thereto as is shown in **Fig.1** of the application drawings produces steady high voltages from a steady illuminating source such as the sun, an incandescent bulb, a fluorescent tube, etc. and that the magnitude of these voltages is high and directly proportional to the length, **l** of the sheet of material provided. In **Fig.1**, the shaded area represents an electrode, and $\mathbf{P_r}$ is the remanent polarisation. In another basic arrangement of the invention, light enters through transparent electrodes and the material is poled in the direction of the light, and the photo-emf up to a certain limiting thickness is proportional to the thickness of the slab.

It has further been discovered that the magnitude of the photo-voltages produced is directly proportional to the remanent polarisation of the material. The polarity of the photo-voltage is dependent on the polarity of the remanent polarisation and reverses when the remanent polarisation is reversed. The magnitude of the voltages that are produced can also be varied by varying the sizes of the grains of which the ceramic is composed, the voltage having a generally proportional relation to the number of grains per unit length. Grain size can be controlled by well-known fabrication techniques involving compositional additives and firing rates, which techniques do not form a part of the present disclosure.

When illuminated at intensity levels such as that produced by direct sunlight or at lesser levels such as that produced by a fluorescent lamp, the materials will behave as voltage sources in series with a high output resistance. The output resistance will decrease an the intensity of illumination increases and also varies with wavelength.

The open circuit voltages produced by the materials of the invention are much higher than those that are typical of other photovoltaic materials. These high open circuit photo-voltages have been observed to some extent in virtually all materials examined which can generally be described or classified by the term ferroelectric ceramic, provided that the material was characterised by a net remanent polarisation. Such high photo-voltages are to be expected in virtually all polarised ferroelectric ceramic materials properly doped, the class including thousands of different known materials of this kind with numerous variations possible in each kind. Such variations are produced by additives, varying grain size, and by changing compositional blends, in those formed from mixtures. Any of these are expected to have application as photovoltaic materials.

From the viewpoint of application, the novel photovoltaic effect seen in ferroelectrics in accordance with the teachings herein differs in two important respects from the well known junction photovoltaic effect which is the mechanism in prior-art devices such as solar cells, and photo-diodes.

First, the prior-art junction photo-emf is independent of the length or thickness of the unit and is low, less than one volt. To obtain high voltages, many cells have to be connected in series. The photovoltaic effect in ferroelectrics, on the other hand, can be used to directly produce high voltages. The photo-emf is proportional to length, and the photo-emf per unit length can be very high. For example, the composition $Pb(Zr_{65}Ti_{35})O_3$ with 7% of the lead substituted by lanthanum, when composed of 2-4 microns grains produces, when illuminated as shown in **Fig.1**, 1500 volts for every centimetre of length between the electrodes. A single one cm square unit thus directly produces 1500 volts.

In this case, it is also clear that the voltage per unit length will be further increased by the development of a composition in which the average grain size is further decreased.

These voltages are so high that applications have been contemplated which are alternatives to the devices presently used for the generation of extremely high DC voltages at low currents -- such as belt machines (the Van de Graaf), in which high voltages are produced by mechanically moving electric charges.

Second, and perhaps even more important, is the fact that the direction of the photo-current and photo-voltage can be reversed simply by reversing the direction of its remanent polarisation. The magnitude of these quantities can be changed by changing that of the remanent polarisation, which in turn can be done (for example) by applying the proper polarity electrical voltage (poling voltage) to the same terminals across which the photo-voltages appear. The reversibility and control provided make immediately possible applications to use in computer memories of a new type -- in which information is stored as remanent polarisation and read out as the polarity and magnitude of a photo-current or photo-emf, such typical applications are disclosed here.

Application to the generation of electrical power from solar radiation, for example, to solar battery type devices and to electrical power generating stations operating on the basis of solar to electrical energy conversion also is possible and contemplated but would require, to be practical, (except in special cases) considerably larger conversion efficiency than has been observed so far in the materials examined. A calculation of theoretical maximum efficiency, however, yields results which are large enough to suggest eventual practical use in this manner. A conversion system based on these high voltage materials would have the particular advantage of producing its electricity directly at high voltage which is advantageous for power transmission purposes.

The mechanism for the discovered effect appears to be unique and different from photovoltaic mechanisms previously described. Description will be provided explaining the mechanism and developing a theory for it. From this, it will be clear that the entire class of polycrystalline ferroelectrics are expected to exhibit high photo-emf's to at least some extent.

BRIEF DESCRIPTION OF THE DRAWINGS

The invention itself will be better understood and further features and advantages of it will become apparent from the following detailed description which makes reference to the drawings, where:

Fig.1 is a schematic diagram illustrating the basic arrangement by which photovoltaic voltages are generated by the application of light to a ferroelectric ceramic material as shown by this invention;

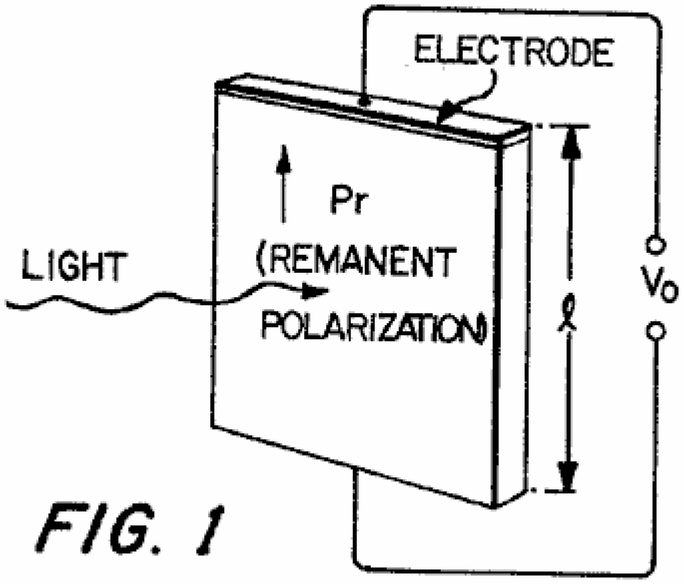

FIG. 1

Fig.2 is an electrical schematic diagram depicting an equivalent circuit to the basic apparatus of **Fig.1**, where C_0 is the capacitance of the sample measured utilising a capacitance meter connected between the electrodes and C_1 is the parallel capacitance of a load coupled to the electrodes, and R_1 is the resistive value of that load;

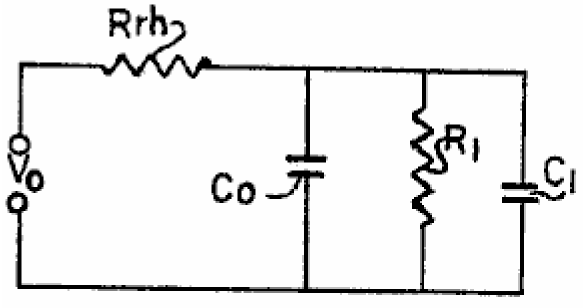

FIG. 2

Fig.3 is a graphical illustration of current vs. applied voltage to an illuminated ferroelectric wafer of the basic form depicted in **Fig.1**;

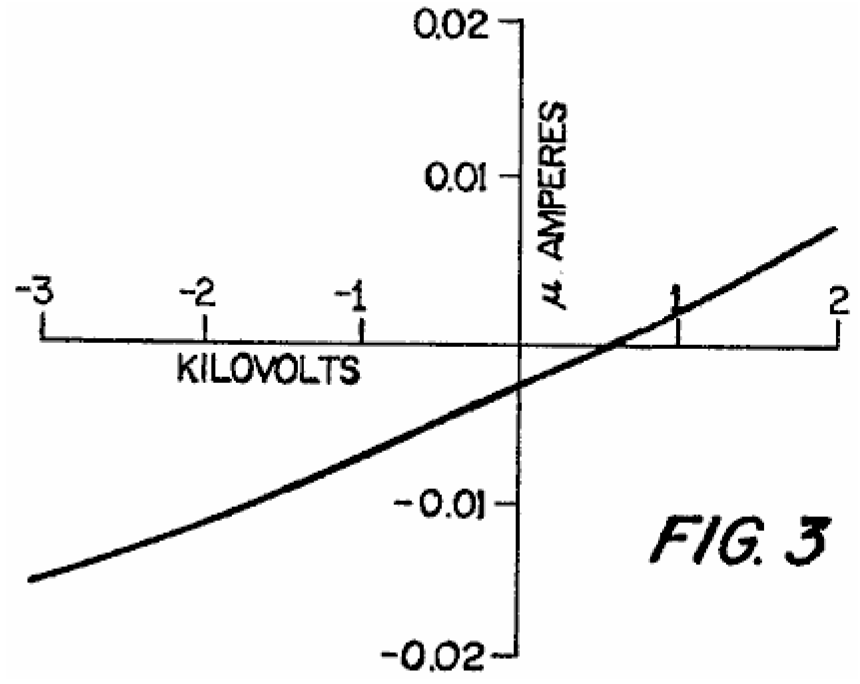

FIG. 3

Fig.4 is a graphical illustration of the photo-emf and photo-current as a function of intensity of illumination, with the particular graphical results being for a solid solution $Pb(Zr_{0.53}Ti_{0.47})0_3$ with about 1% by weight of Nb_20_5 added;

FIG. 4

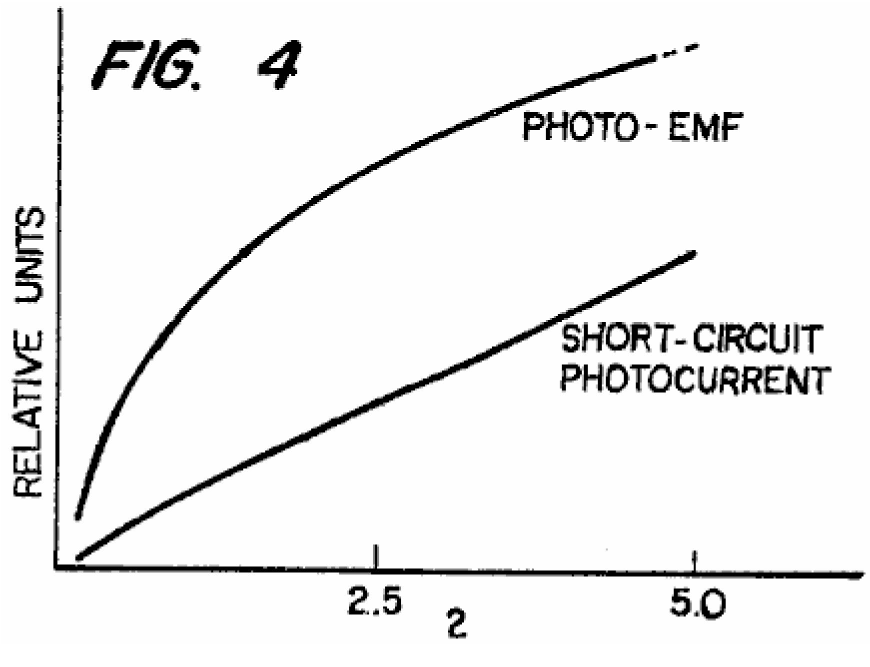

Fig.5 is a graphical illustration of photo-emf vs. grains per unit length (inverse median grain size) for two different materials;

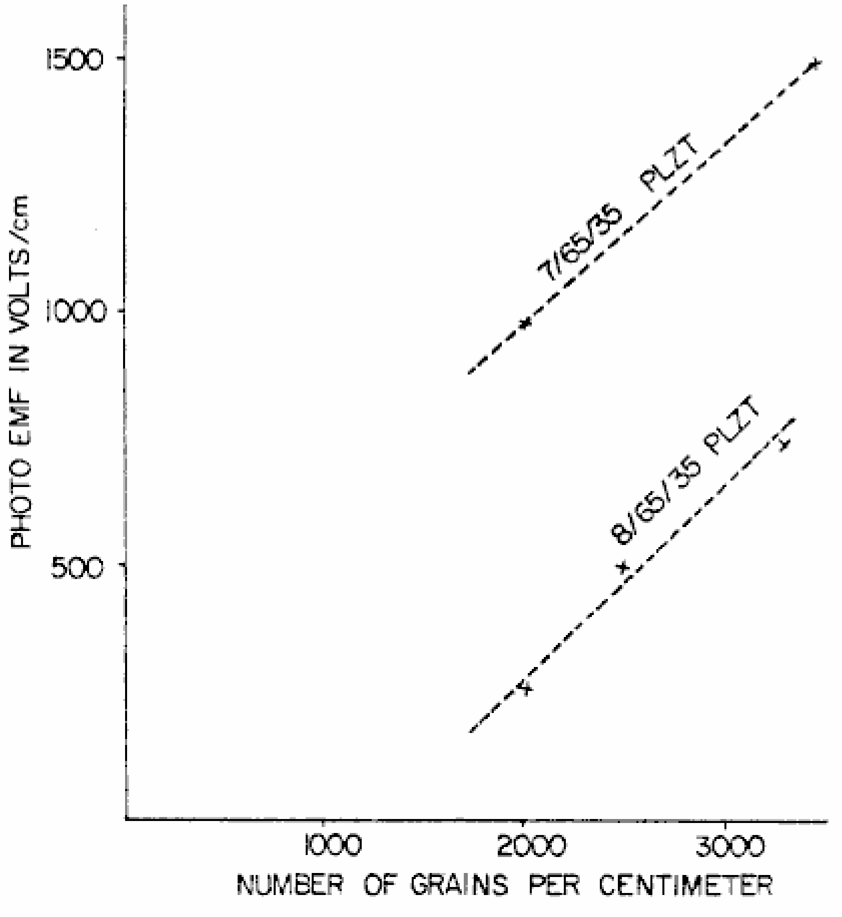

FIG. 5

Fig.6 is a graphical illustration of photo-voltage vs. remanent polarisation for ceramic $BaTiO_3$ + 5% by weight of $CaTiO_3$;

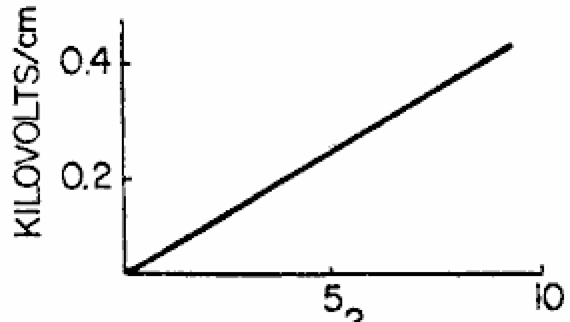

FIG. 6

Fig.7 is a diagram illustrating the short-circuit photo-current as a function of wavelength for the solid solution $Pb(Zr_{0.53}Ti_{0.47})O_3$;

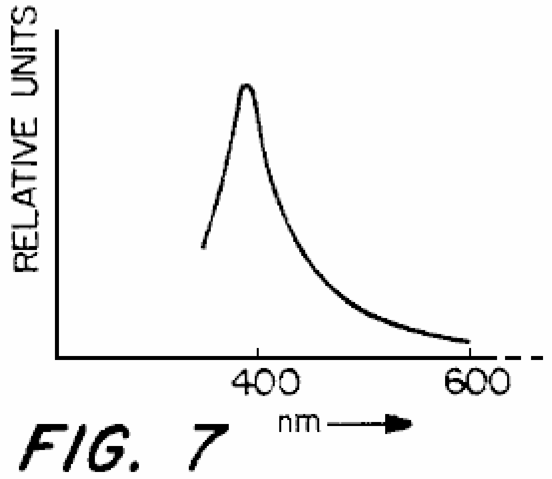

FIG. 7

Fig.8 is a diagram illustrating the short circuit photo-current as a function of wave length for ceramic $BaTi0_3$ + 5% by weight of $CaTi0_3$;

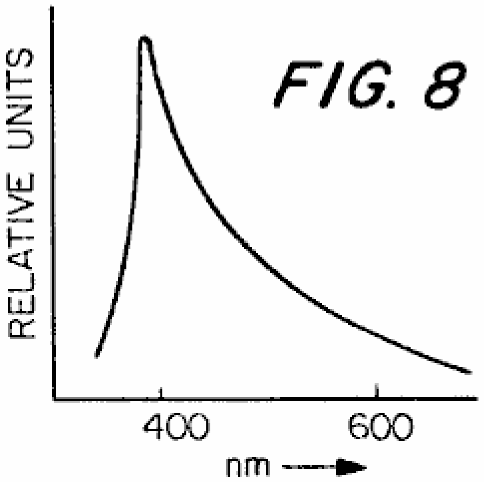

FIG. 8

Fig.9 is a diagram illustrating the short-circuit photo-current as a function of wavelength for the solid solution $Pb(Zr_{0.65}\ Ti_{.0.35})0_3$ with 7% of the lead substituted for by lanthanum;

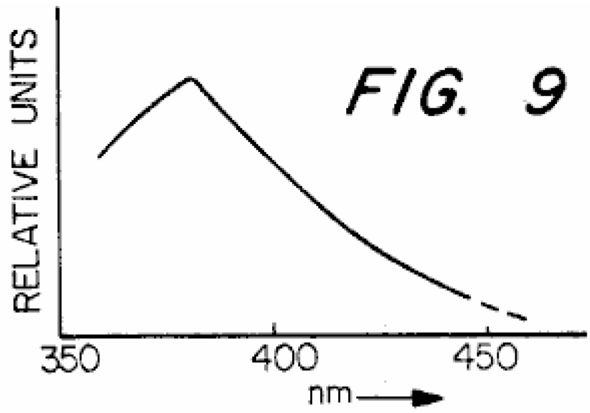
FIG. 9

Fig.10 is a diagram illustrating the photo-emf vs. wavelength for the solid solution $Pb(Zr_{.0.35}Ti_{0.47}0_3$ with 1% by weight of Nb_20_5 added;

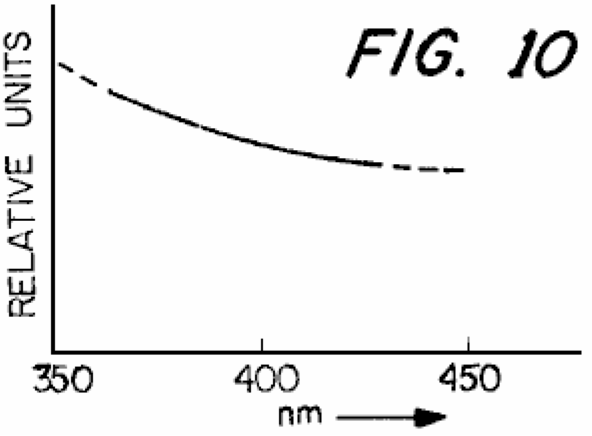
FIG. 10

Fig.11 is a diagram illustrating the photo-current divided by intensity vs. cut-off wave length of long wave length cut-off dichroic filters, with the materials being Pb($Zr_{0.53}$ $Ti_{.0.47}$)0_3 with 1% by weight of Nb_20_5 added and utilising a high-pressure mercury arc as the illumination source;

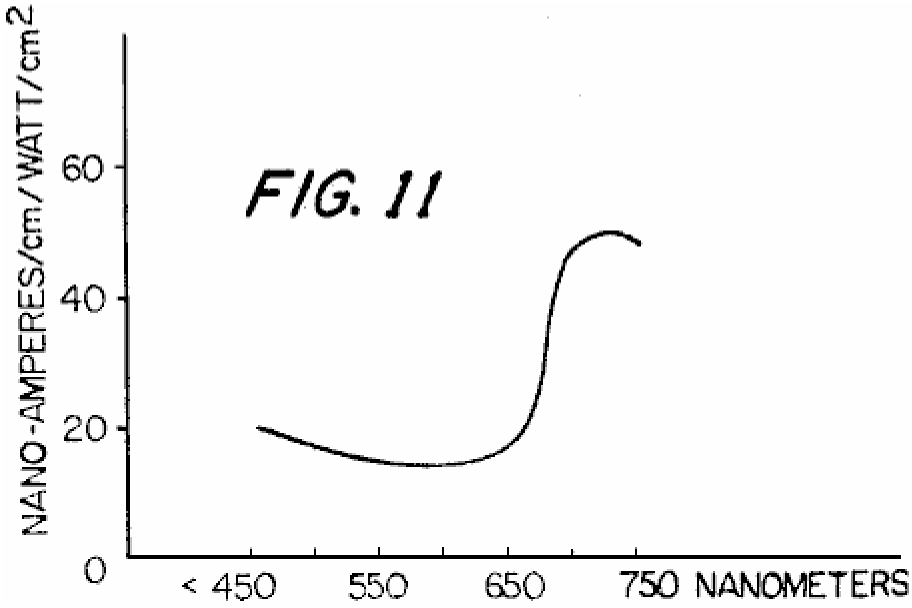

FIG. 11

Fig.12 is a diagram illustrating the photo-current divided by intensity vs. cut-off wavelength of short wave length cut-off filters, with the material being Pb($Zr_{0.53}$ $Ti_{.0.47}$)0_3 with 1% by weight of Nb_20_5 added;

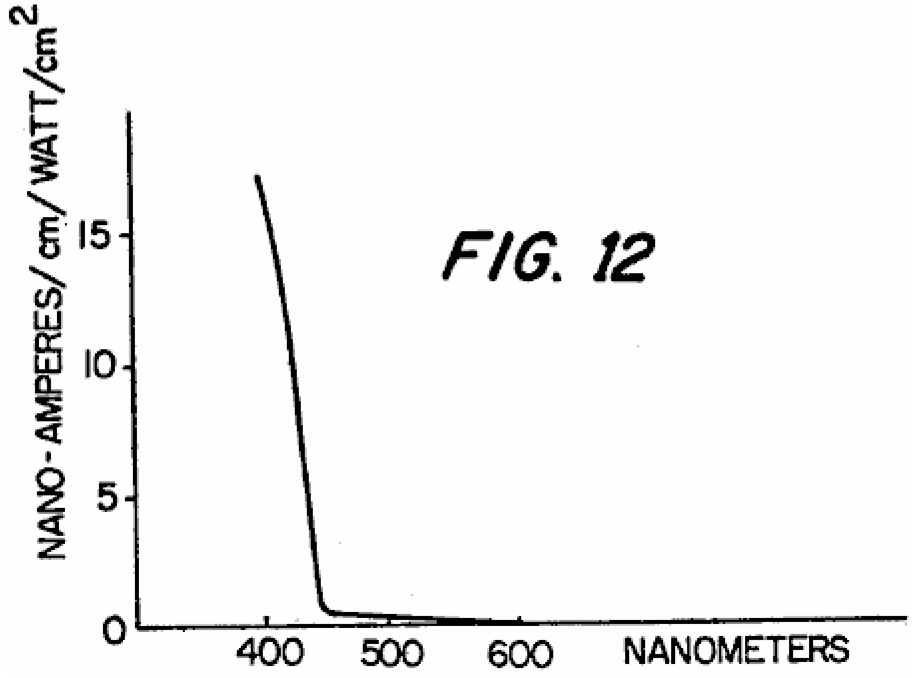

FIG. 12

Fig.13, is diagram illustrating the photo-emf vs. wave length of short wavelength cut-off filters, with the material being Pb($Zr_{0.53}$ $Ti_{.0.47}$)0_3 with 1% by weight of Nb_20_5 added;

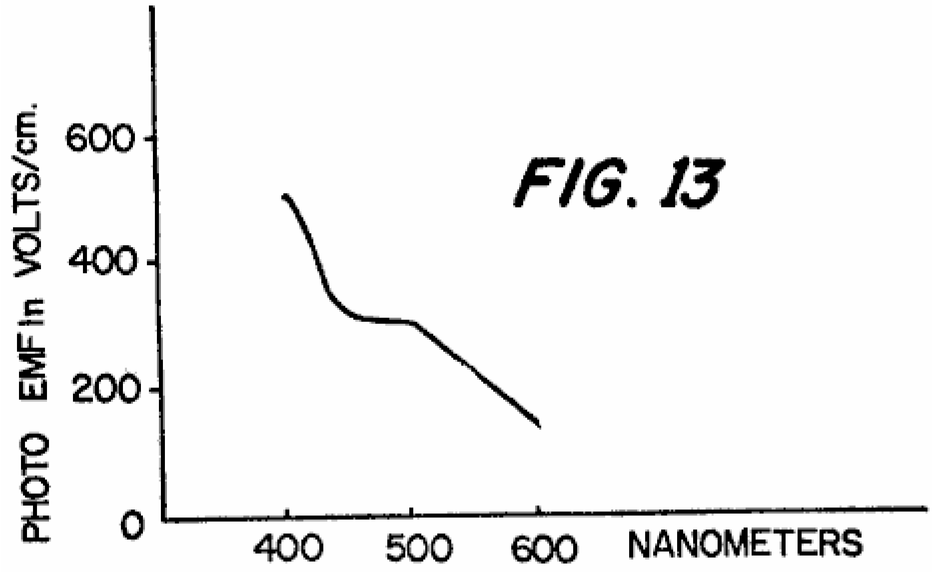

FIG. 13

Fig.14 is a pictorial illustration of the manner in which a single crystal produces a photo-emf, with the polarisation $\mathbf{P_s}$ being normal to the electrodes, which electrodes are illustrated by the shaded area;

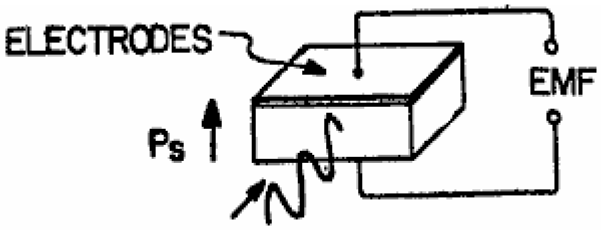

FIG. 14

Fig.15 is a diagram illustrating photo-current vs. wave length of the single crystal $BaTi0_3$;

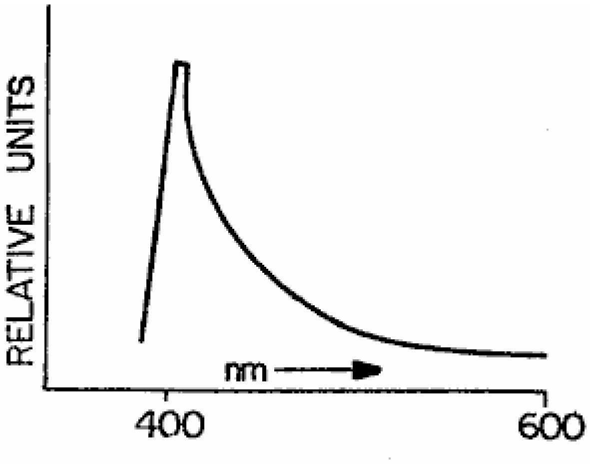

FIG. 15

Fig.16 is a diagram illustrating the photo-voltage vs. temperature for $BaTi0_3$ +5% by weight of $CaTi0_3$;

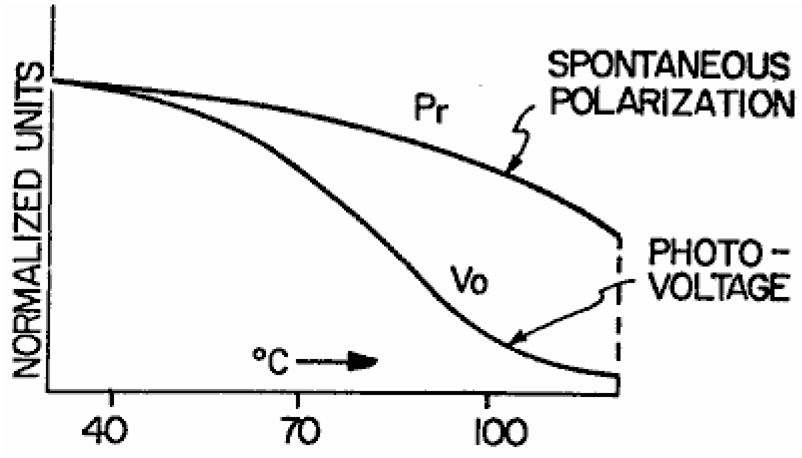

FIG. 16

Fig.17 is a diagram illustrating the photo-voltage vs. temperature of single crystal $BaTiO_3$;

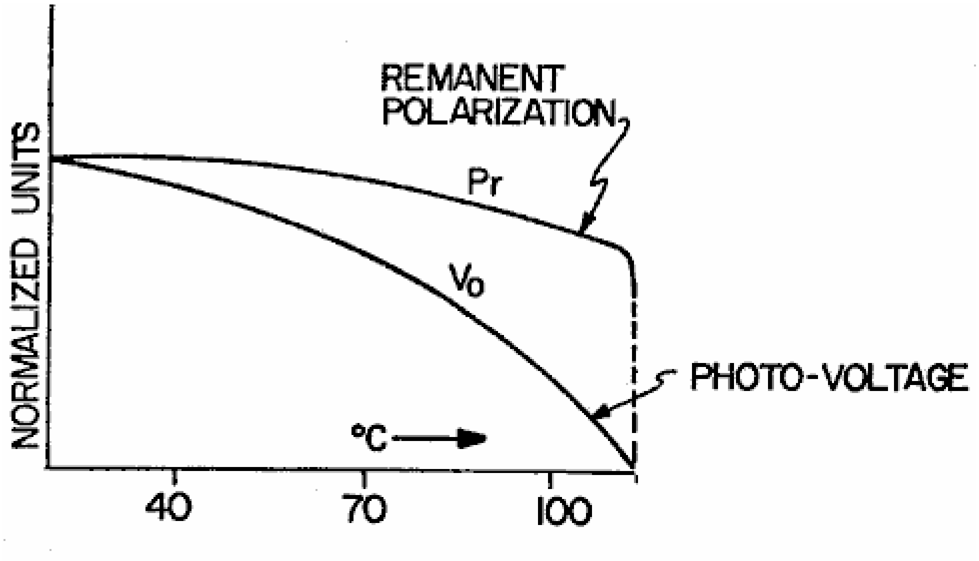

FIG. 17

Fig.18 is a diagram illustrating photo-current vs. temperature for $BaTiO_3$ + 5% by weight of $CaTiO_3$;

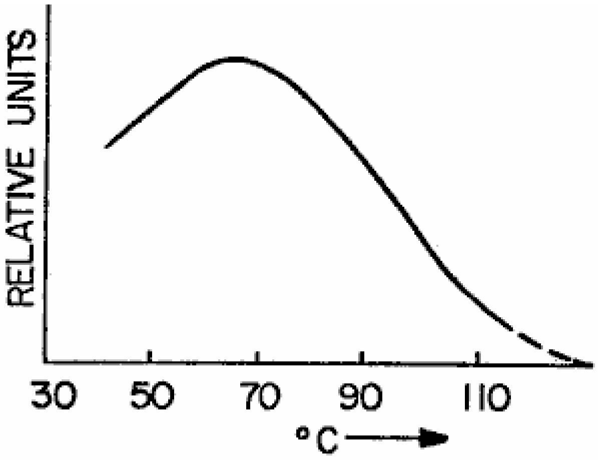

FIG. 18

Fig.19 is a cross-sectional, elevational view schematically depicting the ceramic slab of **Fig.1**, with the photo-emf appearing across the electrodes on the edge, and with most of the photo-current flow being found in the shaded region near the surface;

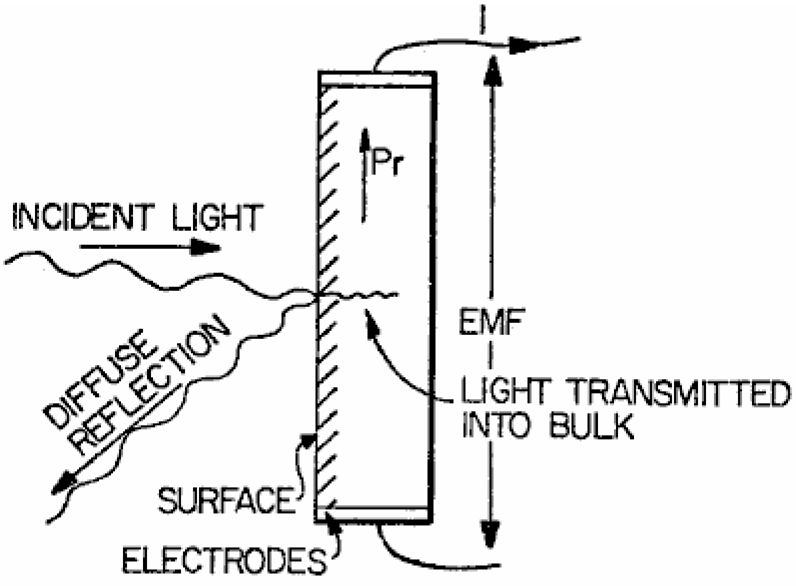

FIG. 19

Fig.20 is a cross-sectional, elevational view of a slab of ferroelectric ceramic material utilising transparent electrodes and depicting light incident through the transparent electrodes into the slab with the slab being polarised in the thickness direction;

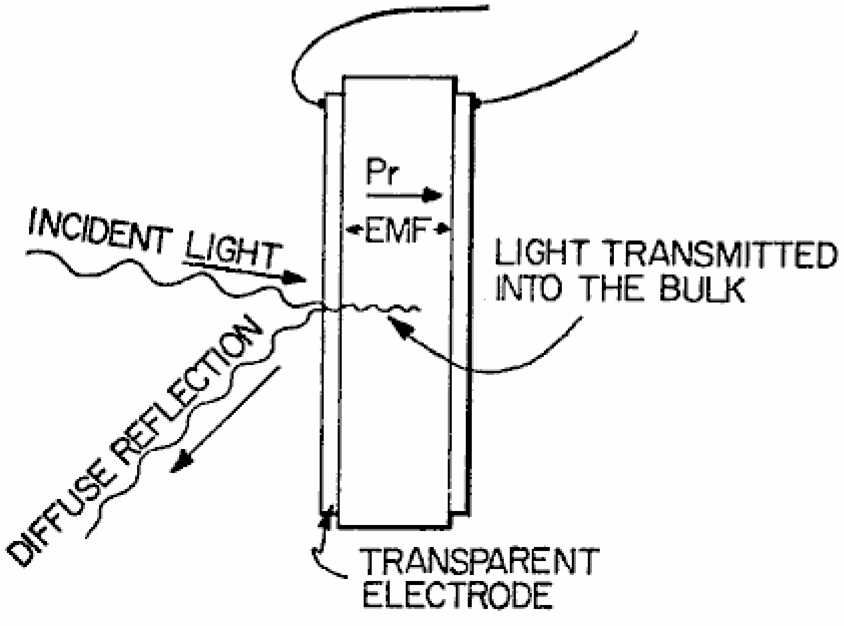

FIG. 20

Fig.21 is a cross-sectional diagrammatic illustration of a single layer of grains depicting the manner in which photo-emf's are produced across the grains in an additive fashion to produce a length dependent effect in the ceramic material, the illumination being incident from the left-hand portion of the drawing and being typically quickly absorbed as it penetrates the material;

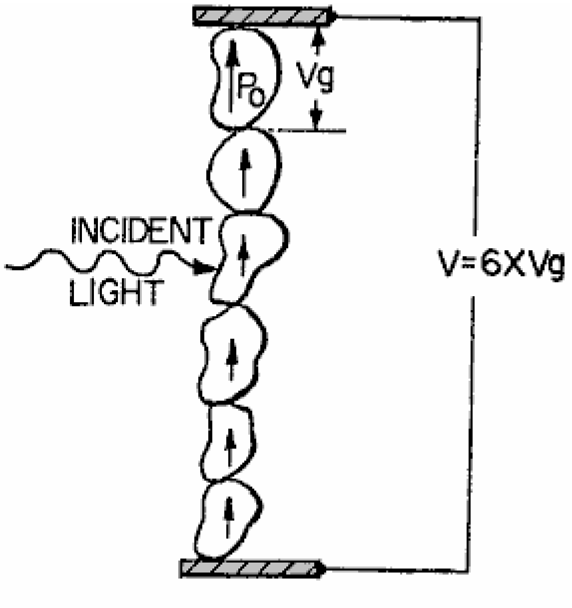

FIG. 21

Fig.22 is a diagram illustrating idealised two dimensional crystals of length **l** with spontaneous polarisation **P_s**, dielectric constant Epsilon $_b$ compensating surface charge per unit area of Sigma = P_s ;

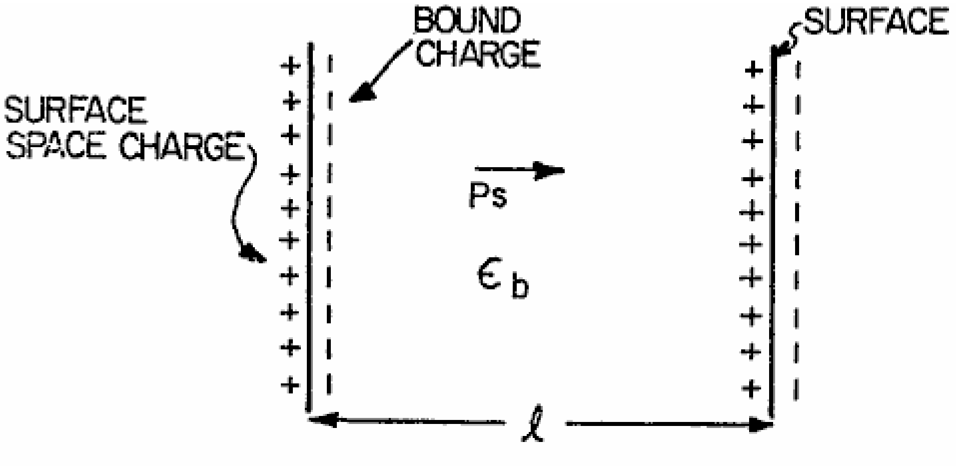

FIG. 22

Fig.23 is an illustration depicting the structure of a typical ferroelectric grain or crystallite;

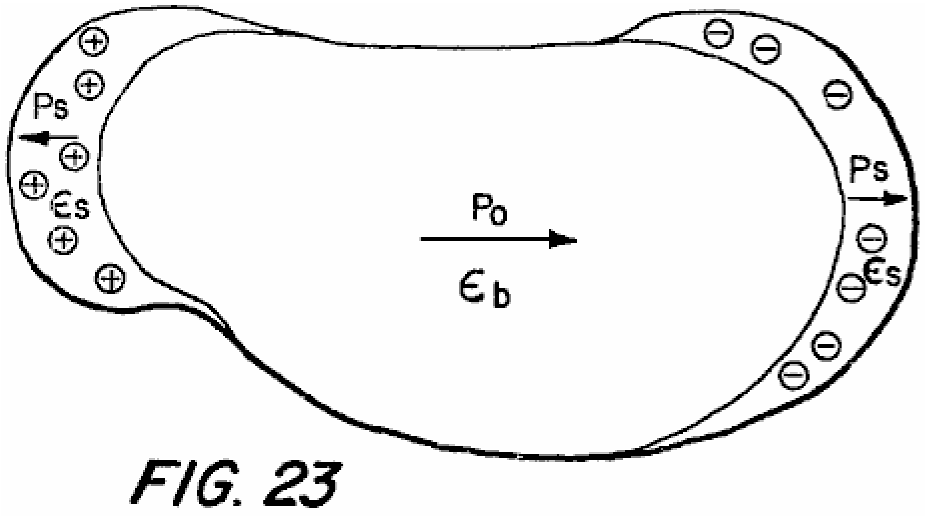

FIG. 23

Fig.24 is an illustration depicting a model of a crystal of length **l**;

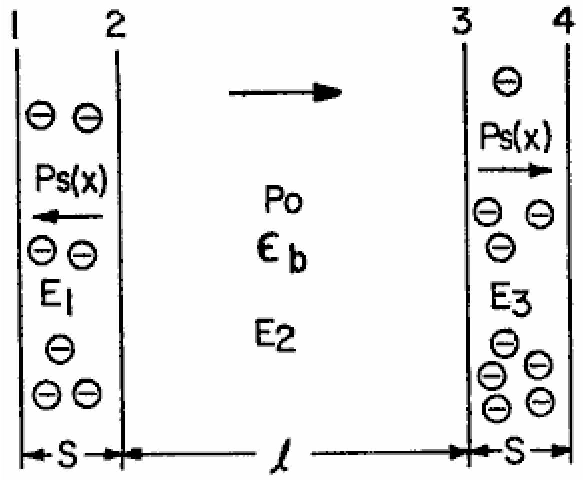

FIG. 24

Fig.25 is a diagram illustrating the potential distribution in an illuminated crystal;

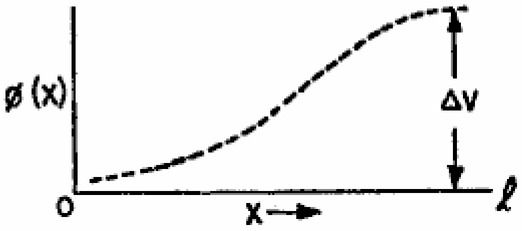

FIG. 25

Fig.26 is a schematic representation of the instant inventive ferroelectric ceramic substrate utilised as a photovoltaic memory device with optical scanning;

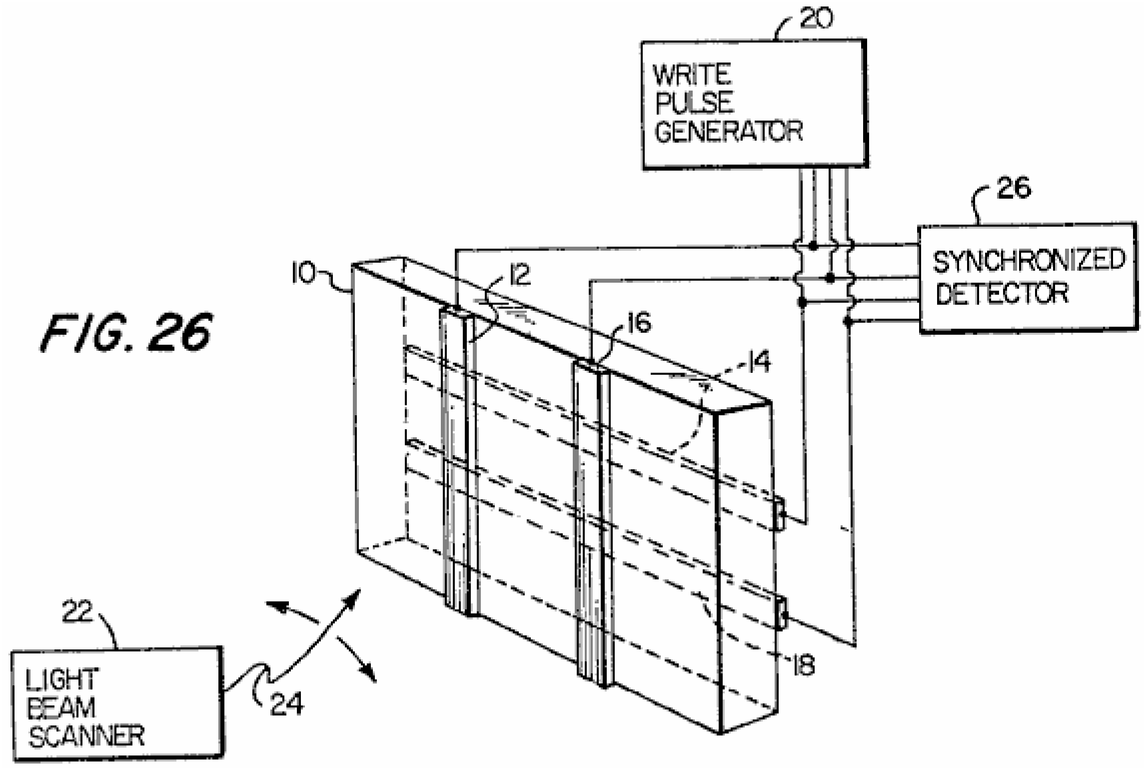
FIG. 26

Fig.27 is a schematic illustration of an optical display apparatus utilising a ferroeletric ceramic material in accordance with the general teachings of the instant invention;

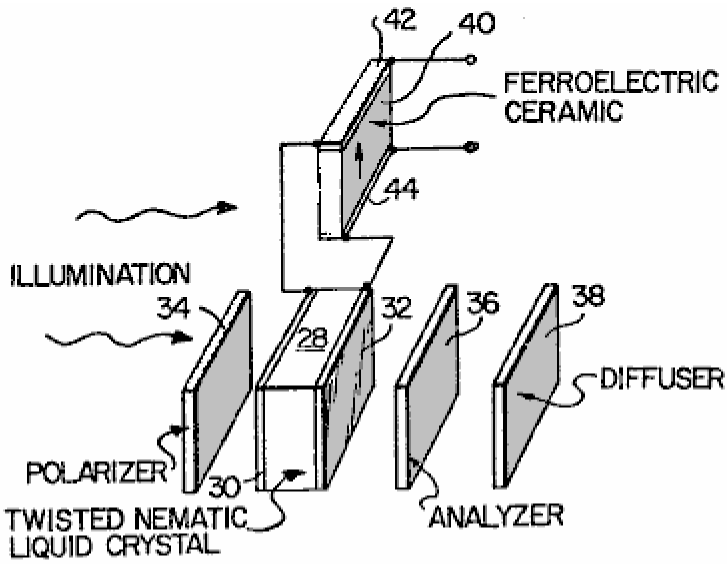
FIG. 27

Fig.28 is a schematic illustration depicting an optical display apparatus constructed in accordance with the teachings of the instant invention in monolithic form utilising a colour switching liquid crystal;

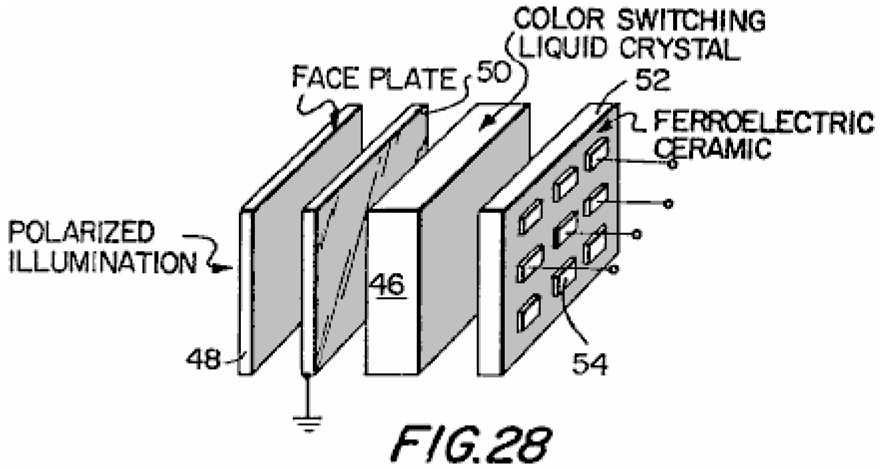

FIG.28

Fig.29 is a schematic illustration of the display apparatus of **Fig.28**, modified to make utilisation of a twisted nematic liquid crystal;

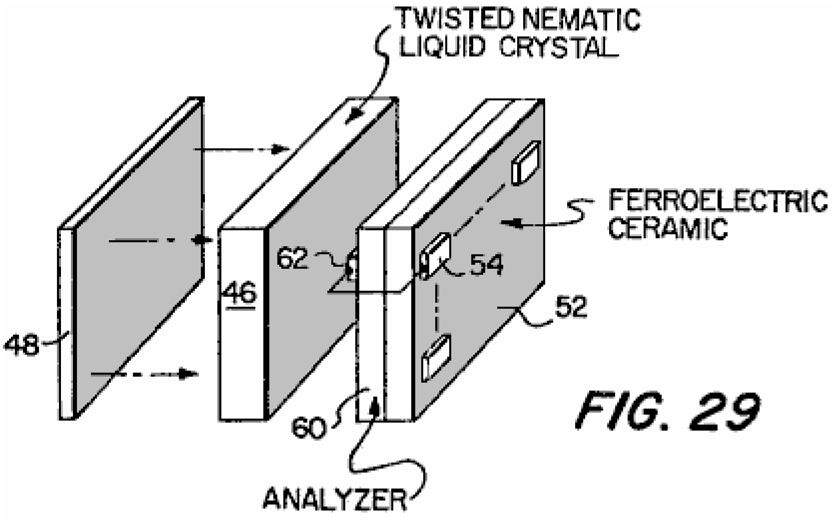

FIG. 29

Fig.30 is a cross-sectional elevational view depicting an optical display apparatus utilising a colour switching liquid crystal in conjunction with a ferroelectric ceramic substrate of the instant invention, and which display apparatus exhibits permanent memory capabilities;

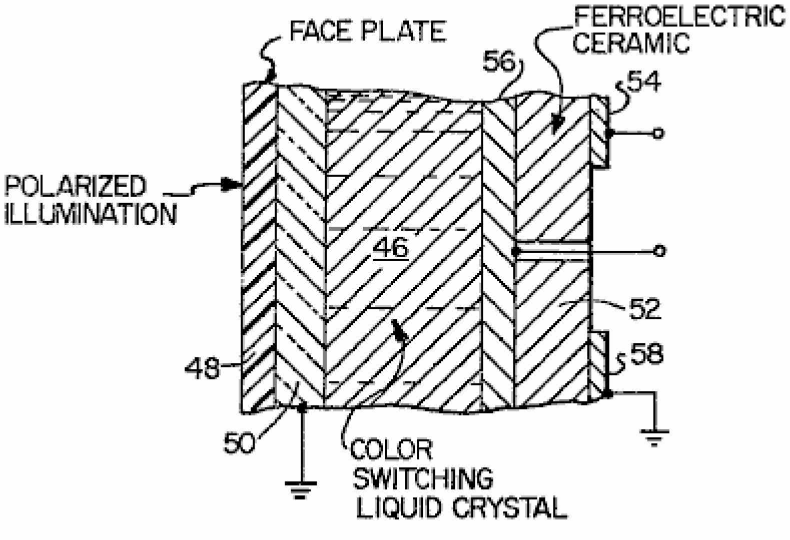

FIG. 30

Fig.31 is a cross-sectional elevational view of a further form of an optical display apparatus constructed in accordance with the teachings of the instant invention, said apparatus utilising a colour switching liquid crystal and further utilising length-wise polarisation of the ceramic substrate;

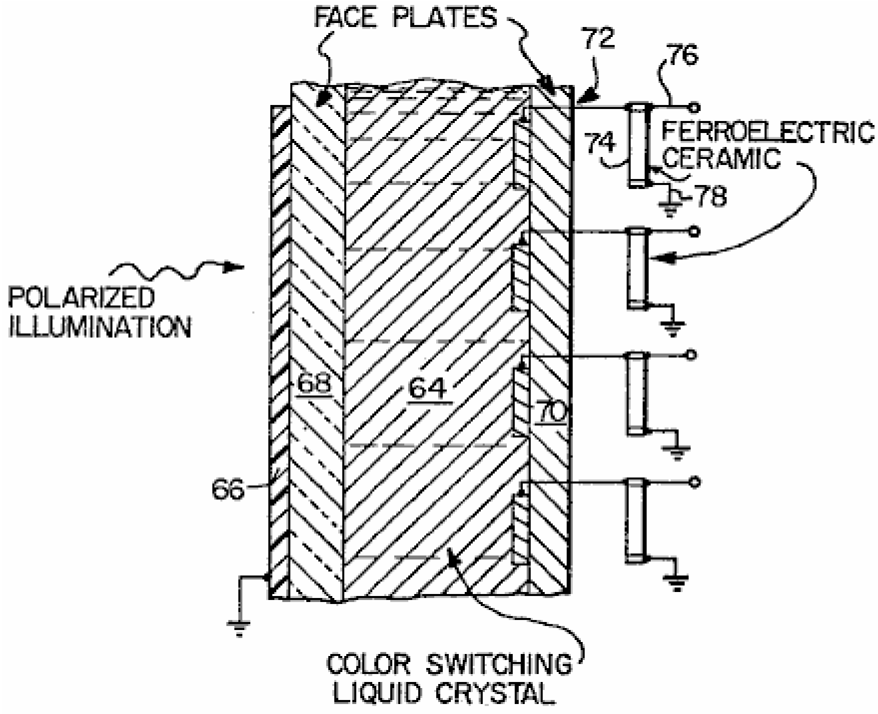

FIG. 31

Fig.32 is an elevational view, in section, of a further form of an optical display apparatus constructed in accordance with the teachings of the instant invention, this apparatus being similar to that depicted in **Fig.31** of the application drawings but utilising a liquid crystal of the twisted nematic type; and

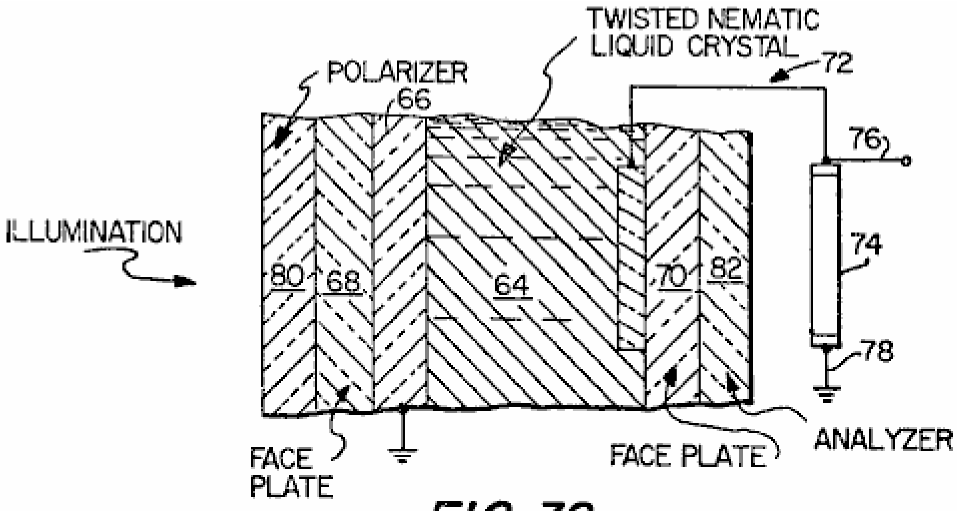

FIG. 32

Fig.33 is a schematic illustration of a further form of optical display and storage utilising the photoconductive as well as photovoltaic properties of the ferroelectric ceramics.

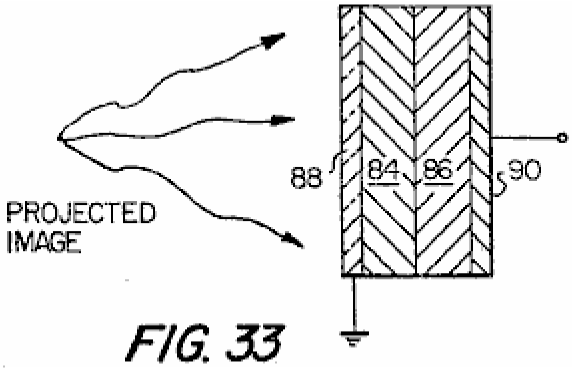

FIG. 33

Fig.34 illustrates how the image stored in a substrate is displayed.

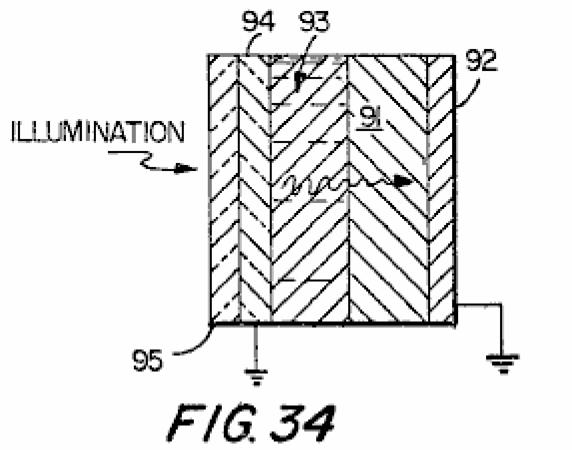

FIG. 34

DETAILED DESCRIPTION OF THE PREFERRED INVENTIVE EMBODIMENTS

With reference now initially to **Fig.1** of the application drawings, a discussion of the novel phenomena of the instant invention will ensue. Upon the application of incident illumination to the ferroelectric ceramic, a steady voltage is produced which is proportional to the length **l** between the electrodes. By dividing the sample into two equal segments along a line perpendicular to the direction of the remanent polarisation and by placing new electrodes on the cut edges, new samples would result each producing photo-emf's which is one half the original photo-emf.

An arrangement such as that shown in **Fig.1** can be described roughly by the equivalent circuit as shown in **Fig.2**. This has a saturation photo-emf **Vo**, in series with the photo resistance of the illuminated sample. **Fig.3** is a current-voltage characteristic of a typical illuminated ferroelectric slab, and has the form expected from the equivalent circuit in **Fig.2** except for the slight tendency towards saturation in the lower left quadrant. As a function of intensity, the photo-emf saturates at relatively low levels of illumination. The short circuit photo-current is, however, linear with light intensity. Results for the material $Pb(Zr_{0.53}Ti_{0.47})0_3$ with 1% by weight of Nb_20_5 are shown in **Fig.4**. The implication of these results and the equivalent circuit in **Fig.2** is that the photo-resistance R_{ph} is inversely proportional to intensity.

A saturation photo-emf and a short circuit current proportional to intensity has been measured in several poled ferroelectric materials. These are shown in Table I:

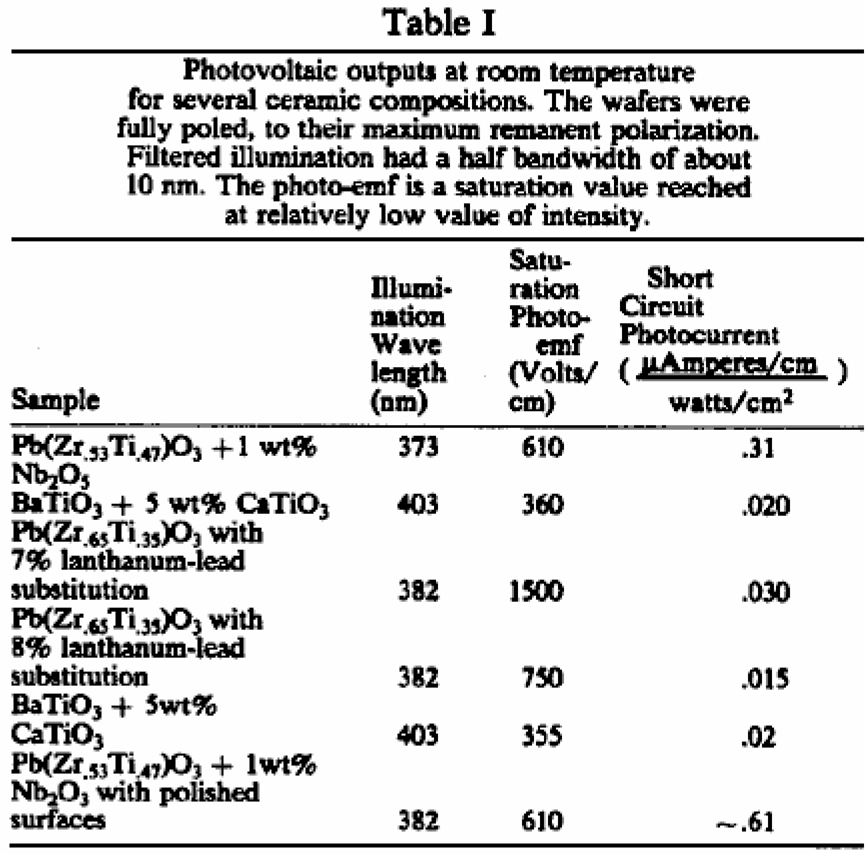

Table I

Photovoltaic outputs at room temperature for several ceramic compositions. The wafers were fully poled, to their maximum remanent polarization. Filtered illumination had a half bandwidth of about 10 nm. The photo-emf is a saturation value reached at relatively low value of intensity.

Sample	Illumination Wave length (nm)	Saturation Photo-emf (Volts/cm)	Short Circuit Photocurrent ($\frac{\mu Amperes/cm}{watts/cm^2}$)
$Pb(Zr_{.53}Ti_{.47})O_3$ +1 wt% Nb_2O_5	373	610	.31
$BaTiO_3$ + 5 wt% $CaTiO_3$	403	360	.020
$Pb(Zr_{.65}Ti_{.35})O_3$ with 7% lanthanum-lead substitution	382	1500	.030
$Pb(Zr_{.65}Ti_{.35})O_3$ with 8% lanthanum-lead substitution	382	750	.015
$BaTiO_3$ + 5wt% $CaTiO_3$	403	355	.02
$Pb(Zr_{.53}Ti_{.47})O_3$ + 1wt% Nb_2O_3 with polished surfaces	382	610	~.61

For a given composition the photo-emf is also a function of grain size. These results are shown in Table II.

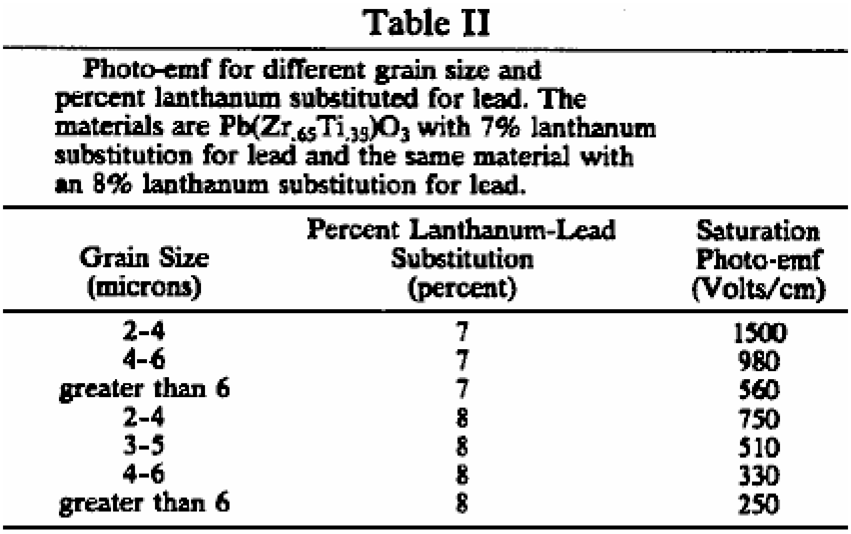

Table II

Photo-emf for different grain size and percent lanthanum substituted for lead. The materials are $Pb(Zr_{.65}Ti_{.35})O_3$ with 7% lanthanum substitution for lead and the same material with an 8% lanthanum substitution for lead.

Grain Size (microns)	Percent Lanthanum-Lead Substitution (percent)	Saturation Photo-emf (Volts/cm)
2-4	7	1500
4-6	7	980
greater than 6	7	560
2-4	8	750
3-5	8	510
4-6	8	330
greater than 6	8	250

the photo-voltage v. number of grains per unit length is plotted in **Fig.5** for two different compositions. The plot clearly shows a relationship between the two quantities.

The fact that the photo-emf of a particular sample depends on the remanent polarisation is shown by the results for a typical ferroelectric material, barium titanate + 5% by weight of $CaTi0_3$,as plotted in **Fig.6**.

The short circuit photo-current depends strongly on the wave length of the impinging illumination. It is a maximum at a wavelength resulting in a photon energy equal to the band gap energy of the material. Other wavelengths can, however, contribute strongly to the current.

Results for typical materials are shown in **Fig.7**, **Fig.8**, and **Fig.9**. The current (ordinate) is that produced by illumination contained in a small band, of about +10 nm about a wavelength indicated on the abscissa. A mercury source and notch type dichroic filters were used. The total intensity within each band was only roughly constant.

The current that has been plotted has been therefore normalised to constant intensity by assuming the linear relation between the two.

The photo-emf is less strongly dependent on wave length. Results for a particular material, using notch dichroic filters is shown in **Fig.10**. These values are saturation values, roughly independent of intensity.

An important additional phenomena shows a dependence of current produced in the red and infrared regions in the presence of simultaneous blue band gap radiation. These results are shown in **Fig.11** and **Fig.12**. The ordinate (**Fig.11**) is the current produced by the light from a mercury arc shining through dichroic long wavelength cut off filters, the abscissa the wavelengths above which no light illuminates the sample. Note the step at 650 nm. Using short wavelength cut off filters which eliminate the band gap light results in no current until the cut off wavelength is below the band gap. These results are shown in **Fig.12**. The amount of output in the red actually depends on the intensity of simultaneous band gap radiation, thus the energy efficiency of these materials for a broad band source is not simply the intensity weighted average of the efficiencies for individual wavelengths as produced by notch filter. The actual value is larger.

Photo-emf vs. cut-off wavelength for $Pb(Zn_{0.53}Ti_{0.47})0_3$ +1% by weight of Nb_20_3 is shown in **Fig.13**. A substantial photo-emf appears at long wavelengths but no current can flow. In other words, the internal resistance R_{ph} is extremely high unless band gap is incident.

Single Crystal Results

The ceramic results imply a small photo-emf from a single crystal illuminated as shown in **Fig.14**. Such emf = 0.55V at room temperature was indeed observed.

The short circuit current is, as for the ceramic material, a strong function of wavelength. These results are shown in **Fig.15**.

Temperature Dependence

Ceramic photo-emf is a function of temperature. Results for barium titanate ceramic with 5% by weight of $CaTi0_3$ are shown in **Fig.16**. For both $Pb(Zn_{0.53}Ti_{0.47})0_3$ with 1% by weight of Nb_20_5 added and barium titanate the photo-emf decreases with increasing temperature. In these measurements, the temperature ranged to the transition temperature, the photo-emf vanishing at the temperature at which the remanent polarisation also vanishes. The remanent polarisation vs. temperature for this material is also shown in **Fig.16**. Similar results for single crystal barium titanate are shown in **Fig.17**. The single crystal photo-emf are, of course, much smaller. Short circuit was measured as a function of temperature. Results for barium titanate +5% by weight of $CaTi0_3$ are shown in **Fig.18**. Similar results over the same temperature range were obtained for $Pb(Zn_{0.53}Ti_{0.47})0_3$ + 1% by weight of Nb_20_5 material. In that case there was no maximum, the photo-current still increasing with increasing temperature at 130^0 C.

Effects of Optical Properties

In the arrangement shown in **Fig.1**, the direction of polarisation, and consequently the direction of the photo-emf is perpendicular to the direction of incidence of the light which is also the direction in which the light is strongly absorbed. The light only enters into a region near the surface of the material. The rapidity of the absorption depends strongly on the wavelength of the light, the light becoming fully absorbed in a region closer and closer to the surface as one decreases the wavelength of the light and approaches the band gap wavelength. For shorter wavelengths, the light no longer enters the material and thus for these wave lengths the light-induced effects decrease rapidly with decreasing wavelength.

Ceramic materials which exhibit these photo-emf's can appear transparent, translucent, and apparently opaque when viewed with white light. Light, however, obviously enters even the opaque materials to produce the photo-emf's. The apparent opacity is produced by diffuse reflection at granular boundaries. It is of course desirable to minimise the degree to which diffuse reflectivity prevents light from entering the material. Nevertheless, the largest photo-currents and greatest photovoltaic efficiency has been originally observed in a material which appears opaque in thickness more than a few thousandths of an inch. The cross sectional drawing **Fig.19** depicts the way light enters the material with the arrangement as originally shown in **Fig.1**.

When a circuit connects the electrodes, the maximum density of current occurs near the surface, the current density decreasing in regions deeper within the thickness.

Polishing the surfaces of these materials, however, increases the transparency and, as expected, the magnitude of the photo-current and the photovoltaic conversion efficiency. An emf will also be produced by the arrangement shown in **Fig.20** provided, of course, that the electrodes are of a nature to allow light to enter the material. Normal thick metal electrodes are opaque to light. When metal electrodes are thin enough, they permit light to be transmitted and yet are sufficiently conductive to function as electrodes. Other conducting transparent electrodes include indium oxide. The emf now will be seen to appear across the thickness of the material, in the direction of the remanent polarisation.

In this arrangement the high dark resistance of any un-illuminated bulk portion of the material is in series with the circuit connecting the electrodes. The current that can be drawn is limited. Maximum currents can be drawn when the thickness between the electrodes is equal to or less than the absorption depth of the radiation. However, since the saturation photo-emf is not a strong function of intensity, vanishing only for extremely low intensities, the full photo-emf per unit length v_o can usually be observed for this samples.

Proposed Mechanism for the High Voltage Photovoltaic Effect in Ferroelectrics

Briefly, it is proposed that the photo-emf results from the action of an internal field within the bulk of an individual ceramic grain on non-equilibrium carriers generated by illumination. These carriers move to screen the internal field. The photo-emf that appears is the open circuit result of such screening. A change in charge distribution upon illumination changes the voltage across a grain from an initial value of zero to the photo-voltages which are observed.

These photo-emf's appears across individual ceramic grains. What is observed as a length dependent high photo-voltage is the series sum of the photo-emf's appearing across grains, each of which is characterised by saturation remanent polarisation P_o. The situation is shown schematically in **Fig.21**. Individual grains typically are small, of the order of 10 microns in diameter. To produce a high photo-voltage per unit length in the ceramic the voltage across an individual grain need not be large. For example the results in **Table II** for $Pb(Zn_{0.65}Ti_{0.47})0_3$ with 7% Lator Pb can be explained by individual grain photo-voltage of only about 0.5 volts per grain. The clear implication of the experimental results (**Table II** and **Fig.5**) is that for the range of grain sizes investigated, the photo-emf across a grain is more or less independent of the size of the grain. This is supported also by the single crystal results.

Ferroelectric crystals are characterised by large spontaneous polarisation which would be expected to produce large emf's even in the dark. Such emf's are not observed even across highly insulating materials. This is presumed to be the result of space charge within the volume or on the surface of a ferroelectric crystal (which, in ceramics, are the individual grains or crystallites). The space charge produces a potential across a crystal cancelling the potential produced by the net polarisation within they crystal. It is obvious that as long as there are sufficient charges within the crystal which are free to move, any potential produced by an internal polarisation will eventually vanish.

This dark zero potential state is the initial state of a crystal crystallite, grain, and of the ceramic body composed of these grains. The absence of a net potential in the dark does not however mean the absence of internal fields. Internal fields can be expected to exist and are the consequence of the spatial distribution of the charges which bring the net potentials across grains to zero. These spatial distributions can not be arbitrarily assigned, but are subjected to constraints of a basic physical nature.

In the idealised two dimensional crystal shown in **Fig.22**, the surface charge density Upsilon = P_s reduces the potential between the surfaces to zero. If the surface charge density (in actuality this does not occur) is completely juxtaposed upon the bound polarisation surface charge, which has a value P_s, then there are no internal fields. Were there no charge, the crystal would show an internal field P_s/ϵ_b and a potential between the surfaces of $P_s l / \epsilon b$.

Such a field would be well above the dielectric breakdown strength of a real dielectric. For a single domain typical ferroelectric barium titanate $P_s = 26 \times 10^{-2}$ C/m, and the relative dielectric constant Epsilon_r in the direction of polarisation is 137. The field that would have to exist in the absence of compensation charge is over 2×10^6 volts/cm which is well above the dielectric strengths typical of these materials. If such a field could momentarily exist within a ferroelectric crystal it would not exist for long but be reduced from its maximum value to some value below the dielectric strength of the material. The strong field would break down the material and a charge flow would produce a space charge distribution resulting in a new lower value for the internal fields within the crystal.

Such a space charge distribution must exist in an actual crystal. The space charge serves to reduce the potential across a crystal to zero. Such charges have limited mobility and the materials continue to behave as insulators for ordinary strength applied fields.

Such a space charge cannot occupy a delta function-like region as in the idealised situation shown in **Fig.22**, but must occupy instead a finite volume. If these are localised near the surface of the crystal, then an internal field Epsilon$_b$ exists within the bulk of the material and additional fields E_s exist within the space charge regions near the surface.

It is hypothesised that these space charge regions are near the surface of real crystals with the charge distributed within a surface layer thickness **s**. The reasons for same are as follows:

(1) The surface regions of ferroelectric crystals are characterised by regions whose dielectric, ferroelectric, and thermodynamic properties differ markedly from that of the bulk. These differences are best explained by the existence of strong fields in this region that would be produced by space charge. There is a considerable body of information in the literature supporting the existence and delineating the properties of these layers;

(2) The interplay of space charge and the very non-linear dielectric constant of ferroelectric would be expected to localise space charge in a low dielectric constant layer near the surface. In ferroelectrics, unusually high, low field relative dielectric constants (of the order of 1000) can be expected to reduce in value with increasing field strength. Thus charge in a region reduces the dielectric constant of that region increasing the field strength of that region. This feedback mechanism can be shown to localise charge within a layer.

The experimental results supporting the existence of surface layers will not be reviewed here, nor the calculations which support the localisation of charge into layers as a result of a non-linear (saturable) dielectric constant. These may be reviewed by referring to the literature.

A schematic description of a typical grain, i.e. crystallite, with space charge regions of thickness **s**, and a bulk region of thickness **l**, is shown in **Fig.23**. The internal fields (in the two dimensional model) of such a charge distribution superimposed on that produced by the bound polarisation charge will be calculated and also the effect of these fields on carriers within the bulk produced as the result of an internal photo effect (photo-ionisation). Formulae for the photo emf that will be derived will have the correct sign, a linear dependence on remanent polarisation, and the kind of temperature dependence that has actually been observed. In addition there will result an estimate of a size independent grain photo-emf for a typical ferroelectric, barium titanate, which is consistent with that implied from the observed ceramic emf, and single grain emf. The grain has as shown in **Fig.23**:

(1) A bulk region with dielectric constant Epsilon$_b$ and uniform polarisation (at zero applied field) P_o ;

(2) Surface layers of dielectric constant Epsilon$_s$, considerably less than that of the bulk. There are also polarisation in the surface regions P_s (x) which exist at zero applied field. These will generally be parallel to the bulk polarisation at one end and anti-parallel at the other end;

(3) Space charges in these surface layers which serves to remove any potential across the grain. It is the space charge layers which produce high fields which reduce the highly non-linear dielectric constant of the bulk to the lesser value in the surface layers, and also produce the remanent polarisation, P_s (x) with the surfaces.

Such a structure also has an internal bulk field, and surface fields which can be calculated. For the purposes of this calculation we assume a simple two dimensional model shown in **Fig.24**.

The polarisation with the various regions are assumed only for simplicity to be uniform within these regions. Again, only for simplicity those in the surface layers and the bulk are assumed equal in magnitude (i.e. P_s (x) = P_o). The space charge densities .+-.n$_o$e are also assumed uniform and equal in magnitude. The polarisations are equivalent to four bound surface charge densities,

$$\sigma_1 = \overset{\geq}{P_o} \ \sigma_2 = -2\overset{\geq}{P_o}$$

$$\sigma_3 = o \ \ \sigma_4 - \overset{\geq}{P_o}$$

There are, using Gauss's law, electric fields as shown in **Fig.24**.

$$E_1 = \frac{1}{\epsilon_s}[P_o + m_o e x]$$

$$E_2 = \frac{1}{\epsilon_b}[-P_o + m_o e s]$$

$$E_3 = \frac{1}{\epsilon_s}[-P_o + n_o e(s - x)]$$

It has been assumed that the voltage across the crystal vanishes,

$$\int_o^{l+2s} E(x)dx = O$$

n_o and s, from this and the three preceding equations, must be related by the expression

$$m_o es = \frac{P_o}{1 + \frac{\epsilon_b}{\epsilon_s}\frac{s}{l}}$$

and the bulk field

$$E_2 = \frac{-P_o}{\epsilon_b}\left[\frac{\frac{s}{e}\,\frac{\epsilon_b}{\epsilon_s}}{1 + \frac{s}{l}\,\frac{\epsilon_b}{\epsilon_s}}\right]$$

Surface layers in barium titanate ceramic grains have been estimated at 10^{-6} cm (see for example Jona and Shirane Ferroelectric Crystals, Pergammon Press, 1962). The remanent polarisation typical of the ceramic material is about 8 x 10^{-2} C/m^2, the relative dielectric constant of the poled ceramic about 1300. The high field dielectric constant will be estimated at roughly 0.5 the bulk dielectric constant. These numbers yield a bulk field, for a typical 10^{-3} cm grain of,

E_2 = 350 volts/cm

The potential across the bulk would thus be approximately -0.35 volts. The remaining potential across the grain would be that across the surface layers. Illumination has the effect of producing charges which screen the internal field, E_2 causing it to vanish.

The negative voltage vanishes and a positive potential appears across the sample. The light makes the sample look more positive. This is exactly what happens as the result of a thermally-induced decrease in polarisation. Thus the pyro-electric voltage is in the same direction as the photo-voltage as is experimentally observed.

In the fully screened case, the photo-emf is also the emf across the two surface layers

$$\Delta V = \left[\frac{P_o}{\epsilon_s}\,\frac{1}{1 + \frac{\epsilon_b}{\epsilon_s}\,\frac{s}{l}}\right] S \simeq .35 \text{ volts}$$

The light generated free electrons sets up a counter field which tends to cancel the bulk field E_2 ; thus, the observed voltage drop is less than it would be in a perfectly insulating medium. This is what is meant by the term ‘screening’. The counter field approaches -E_2. Assuming the shielding occurs only in the bulk, the total voltage across the grain is now the sum of the voltages across the surface layers.

The photo-emf is in the opposite direction to the bulk polarisation. This fact predicted in the theory is what is always observed experimentally. The complete screening of the bulk field thus would, in barium titanate, be expected to result in a photo-emf of +0.35 volts per grain or 350 V/cm and about 0.35 volts across a macroscopic single crystal. These are roughly the values actually observed as seen in **Table I**, and with the single crystal results. The linear relation between remanent polarisation and saturation photo-emf as shown in **Fig.6** is also predicted by these equations. The dependence on temperature of the photo-emf as shown in **Fig.16** and **Fig.17** is predicted by the fact that as one approaches the curie temperature, not only is P_o decreasing but the dielectric .epsilon..sub.s is increasing. The bulk internal field, E_2, should therefore decrease with temperature more rapidly than the remanent polarisation.

Screening

Solving the general problem of screening in a ferroelectric is difficult. Many of the principles involved can be demonstrated by solving a special case. The special case is meant to be particularly applicable to the $Pb(Zr_{0.53}, Ti_{0.47})0_3$ + 1% by weight of Nb_2O_5 material.

Utilised, only for simplicity, is a two dimensional model, with photo-produced carriers limited to those of a single sign. It will be assumed that these are electrons generated from deep trapping levels midway in the band gap, and that the illumination empties all the traps leaving fixed positive charges to replace the original traps. The complete emptying of a deep trapping level would produce the long wave length photo-voltages and the phenomena of an intensity saturation of the photo-emf typical of the $Pb(Zr_{0.53}, Ti_{0.47})O_3$ + 1% by weight of Nb_2O_5.

Consider a two dimensional illuminated slab of length **l** within which is an internal field **Epsilon** and within which, light generates a uniform density of electrons $\mathbf{n_o}$ (n electrons per unit length). Schematically the situation is shown in **Fig.25**, where **Phi.(x)** is the potential at a point **x**.

The carriers respond to the internal field and occupy a Boltzman distribution

$$M = M_o e^{\vartheta / KT}$$

if the fields due to the electrons could be neglected, then

$$\vartheta(e) = -\mathrm{Ex}$$

This is, of course, too rough an approximation. With n(O) the density of electrons at x=0, and n_o, the density of the immobile donor ions $m(x) = m(o)e^{\vartheta(x)/kt}$ with Phi(x) is given by Poisson's equation,

$$\frac{d^2\phi}{dx^2} = \frac{e}{\epsilon}[m(x) - m(o)] = \frac{e}{\epsilon}[m(o)e^{e\phi(x)/kT} - mo]$$

Since for Phi = 0 n(0) =n_o, and since all traps are emptied, assuming electrical neutrality,

$$\int_o^l mo \int_o^l e^{e\phi/kT} dx = m_o l$$

or

$$m_o \int_o^l e^{e\phi/kT} dx = m_o l$$

then

$$\int_o^l \frac{d^2\phi}{dx^2} dx = \int_o^l \frac{e}{\epsilon}[m(x) - m_o] dx = o$$

or

$$\left.\frac{d\phi}{dx}\right|_{x=l} = \left.\frac{d\phi}{dx}\right|_{x=o}$$

If the crystal is neutral there must be no electric field at the boundary except the applied field $-E_o$

$$\left.\frac{d\phi}{dx}\right|_{x=o} = E_o$$

$$\left.\frac{d\phi}{dx}\right|_{x=l} = E_o$$

These two boundary conditions allow the solution of Poisson's equation.

$$\frac{d^2\varphi}{dx^2} = \frac{m_o e}{\epsilon}\left[\frac{m(o)}{m_o} e^{e\varphi/kT} - 1\right]$$

or

$$\frac{d^2}{dx^2}\left[\frac{e\varphi}{kT}\right] = \frac{M_o e^2}{\epsilon kT}\left[\frac{M(o)}{M_o} e^{e\varphi/kT} - 1\right]$$

substituting

$$y_o = \ln\frac{M_o}{m(o)} \quad y = \frac{e\varphi(x)}{kT}, \quad l_D^2 = \frac{\epsilon kT}{m_o e^2}$$

we obtain,

$$\frac{d^2y}{dx^2} = \frac{1}{l_D^2}\left[e^{y - y_o} - 1\right]$$

in this new notation,

$$\left.\frac{dy}{dx}\right|_{x=o} = \left.\frac{dy}{dx}\right|_{x=l} = \frac{eE_o}{kT}$$

let

$$\frac{dy}{dx} = P$$

$$\frac{d^2y}{dx^2} = \frac{dP}{dx} = \frac{dy}{dx}\ \frac{dP}{dy} = P\frac{dP}{dy} = \frac{d}{dy}\left(\frac{1}{2}P^2\right)$$

so

$$\frac{d}{dy}\left(\frac{1}{2}P^2\right) = \frac{1}{l_D^2}e^{y - y_o} - 1$$

setting $y(o) = 0$ since the zero for a potential may be set arbitrarily

$$\frac{1}{2}P^2(l) - \frac{1}{2}P^2(o) = \frac{1}{l_D^2}\int_o^l (e^{y - y_o} - 1)\,dy$$

$$= \frac{1}{l_D^2}\left[e^{y(l) - y} - y(l) - e^{-y_o}\right]$$

$$y(\varphi) = \frac{e\varphi(x)}{kT}$$

$$y(l) = \frac{e\Delta v}{kT}$$

$$\left.\frac{dy}{dx}\right|_o = \left.\frac{dy}{dx}\right|_l = P(o) = P(l)$$

so

$$O = \frac{1}{l_D^2} \quad e^{-y_0}[(e^{\Delta} - 1) - \Delta]$$

$$\text{where } \Delta = \frac{e}{kT}\Delta \nu \quad \text{or} \quad e^{y_0} = \frac{e^{\Delta} - 1}{\Delta},$$

$$\text{and thus } \frac{Mo}{M(O)} = \frac{e^{\Delta} - 1}{\Delta} = \frac{e^{\frac{e}{kT}\Delta \nu} - 1}{\frac{e}{kT}\Delta \nu}$$

substituting

$$\frac{d}{dy}\left(\tfrac{1}{2} p^2\right) = \frac{1}{l_D^2}\left[\frac{\Delta}{e^{\Delta} - 1} e^{y} - 1\right]$$

so

$$\tfrac{1}{2} p^2(x) - \tfrac{1}{2} p^2(o) = \frac{1}{l_D^2}\left[\frac{\Delta}{e^{\Delta} - 1}(e^{y} - 1) - y\right]$$

$$= \frac{1}{l_D^2}\left[\Delta \frac{e^{y} - 1}{e^{\Delta} - 1} - y\right]$$

Thus

$$\left(\frac{dy}{dx}\right)^2 = \left(\frac{eF_o}{kT}\right)^2 + \frac{2}{l_D^2}\left\{\Delta\left(\frac{e^{y} - 1}{e^{\Delta} - 1}\right) - y\right\}$$

or

$$\frac{dy}{dx} = \frac{\sqrt{2}}{l_D}\sqrt{\Gamma^2 + \Delta\left(\frac{e^y - 1}{e^\Delta - 1}\right) - y}$$

where

$$\Gamma^2 = \frac{1}{2}\,\frac{e}{kT}\,E_o l_p$$

integrating this equation from O to l yield

$$\int_o^{y(l)} \frac{dy}{\sqrt{\Gamma^2 + \Delta\left(\frac{e^y - 1}{e^\Delta - 1}\right) - y}} = \frac{\sqrt{2}}{l_D}\;{}_{o}^{\,l}\,dx$$

or,

$$\int_o^{\Delta} \frac{dy}{\sqrt{\Gamma^2 + \Delta\left(\frac{e^y - 1}{e^\Delta - 1}\right) - y}} = \frac{\sqrt{2l}}{l_D}$$

which is an implicit expression for ΔV in terms of E_o, l, and l_D.

For low n_o and/or large E_o, Γ is large

$$\int_o^{\Delta} \frac{dy}{\sqrt{\Gamma^2}} = \frac{\sqrt{2}\,l}{l_D}$$

$$\Delta = \sqrt{2}\,l\,\Gamma / l_D$$

or

$$\Delta = \sqrt{2}\,l \times \frac{1}{\sqrt{2}}\left[\frac{e}{KT}\,E_o l_D\right]l_D$$

$$= \frac{e}{KT}\,E_o l$$

or

$$\Delta V = E_d l$$

which is the original potential across the bulk of the crystal.

The situation of interest is however large n_o and small l_D and small Γ^2.

It is in this situation that

$$\Delta = \frac{e}{KT}\,\Delta V$$

can be expected to vanish.

Expanding the expression for Δ small, which is always the case, then

$$\Delta\,\frac{e^y - 1}{e^\Delta - 1} - y \approx \tfrac{1}{2}y^2 - \tfrac{1}{2}y\Delta$$

Keeping only second order terms in y and Δ, then

$$\int_o^{\Delta} \frac{dy}{\Gamma^2 + \frac{1}{2}(y^2 - y\Delta)} = \frac{l\sqrt{2}}{l_D}$$

Let

$$\xi = y - \frac{\Delta}{2},$$

this becomes

$$\int_{-o/2}^{\Delta/2} \frac{d\xi}{\sqrt{(\Gamma^2 - \frac{1}{8}\Delta^2) + \frac{1}{2}\xi}} = \frac{l\sqrt{2}}{l_D},$$

Setting

$$\xi = \sqrt{2\Gamma^2 - \left(\frac{\Delta}{2}\right)^2}\,,\ \sin h\ O$$

gives

$$2\sqrt{2}\ \sin h^{-1}\left[\frac{\Delta/2}{\sqrt{2\Gamma^2 - \left(\frac{\Delta}{2}\right)^2}}\right] = \frac{\sqrt{2}\ l}{l_D}$$

or

$$\Delta = 2\sqrt{2}\ \Gamma \tan h \frac{l}{2l_D}$$

or

$$\Delta V = E_o (2l_D) \tan h \frac{l}{2l_D} ,$$

clearly as

$l_D \rightarrow O \ \Delta V \rightarrow O$

This approximation for Δ V is good for all reasonable values of T.

Illumination thus reduces the dark bulk emf = $E_o l$, producing a net photovoltage

$$V_{PHOTO} = E_o l \left[1 - \frac{\tanh \frac{l}{2l_D}}{\frac{l}{2l_D}} \right]$$

where

$$l_D = \sqrt{\frac{EkT}{m_o e^2}}$$

A simplified expression occurs for small

$$\frac{l}{2l_D}$$

where, $\tanh x \simeq x - \frac{1}{3}x^3$

$$V_{PHOTO} = E_o l \left[\frac{1}{2} \left(\frac{l}{2l_D} \right)^2 \right]$$

Here, it is clear that the photovoltage becomes insignificant for

$$\frac{l}{l_D}$$

The implication is therefore that photovoltaic contributions from the bulk will be much larger than that from the surface layers, for surface layers are extremely small white **l_D** can be estimated as very roughly equal in the bulk and the surface.

Thus, illumination will result in the vanishing of the internal field within the bulk resulting in a maximum photo-emf. $\Delta V = 0 \ E_2 l$ where E_2 is the bulk field.

For small intensities, we can assume n_o small, then

$$V_{PHOTO} = E_o l^3 \frac{1}{4} \ \frac{n_o e^2}{ekT}$$

i.e., the photo-voltage is proportional to n_o which can be reasonably assumed proportional to intensity which is experimentally observed (see **Fig.4**).

The model just described explains the long wave length photo-emfs, in the material $\mathrm{Pb}(_{0.53}\mathrm{Zr},_{0.47}\mathrm{Ti})0_3$ + 1% by weight of Nb_20_5. Such a deep trapping level is probably typical of the lead titanate-lead zirconate materials with characteristic lead vacancies. These bind electrons leaving holes (producing p type dark conductivity). The addition of common dopants -- for example niobium gives rise to free electrons which combine with holes or get trapped by the lead vacancies. The doping can thus be said to provide electrons which fill traps.

It is these trapped electrons which are photo-injected into the conduction band by the long wave length light providing near maximum photo-emfs in material illuminated at 500 nm and even longer wave lengths as shown in the results plotted in **Fig.13**. Full saturation, that is the complete shielding of the bulk internal field, requires however band gap carriers which occurs as one approaches the 373 nm band gap wave length. Solving this problem, that of band gap carriers in addition to electrons generated by deep traps, can be accomplished in a manner similar to that which was accomplished for the trapped electrons but is more complex for example because mobile holes are being produced in addition to electrons and one cannot necessarily fix the maximum number of carriers.

The photo-emfs are created by photo-induced carriers shielding the bulk field. Effectively, no photo-current can flow however unless band gap light is present as is clear from the results shown in **Fig.12** and **Fig.13**. Here it is clear the band gap light produces maximum photo-emf and maximum photo-currents, less than band gap light, maximum or almost maximum photo-emf but no photo-currents and that the output resistance under these circumstances appears extremely high. Addition of band gap light allows current to flow.

The tentative explanation is that the surface layers from high resistance barriers, the magnitude of which lowers with band gap light. The surface layers thus act as intrinsic photoconductors in series with an emf. This picture not only explains the rather unique dependence of photo-emf and short circuit photo-current on wave length as shown in **Fig.12** and **Fig.13** but also the equivalent circuit which is typical of all these materials as described in **Fig.2** and as indicated by the current-voltage results in **Fig.3**.

A possible explanation for the high resistance of the surface layers is that they include quantities of charged ions which have been localised there. These are immobile under normal applied voltages moving only under the action of high fields such as produced by the reversal of the remanent polarisation. Those ions not only will occupy trapping levels, eliminating the need for easily ionised trapped electrons and thus reducing the intrinsic conductivity but also form centres for coulomb scattering of conduction electrons which should contribute markedly to the resistivity.

Efficiency

Some insight into the possible maximum efficiency of the process can be obtained by considering carriers generated by band gap light. with potential energy

$$U = 2\int_o^L e\,\phi(x)\delta M_2 dx$$

with $\phi(x) < Ex$
so that a maximum value of energy

$$U = 2e\int_o^L E\delta mx dx$$

$$= e\delta m_o EL^2$$

The energy required to produce δm_o electron hole pairs

$$\epsilon = \delta M_o L\, E_g$$

where Eg is the band gap energy.
The power into the crystal is

$$P_m = LEg\frac{\delta M_o}{\delta t}$$

while the power out (the rate of increase in internal potential energy) is

$$P_{out} = eEL^2 \frac{\delta M_2}{\delta T}$$

The efficiency

$$= \frac{eEL}{Eg}$$

For $Pb(Zr_{.53}\ Ti_{,47})o_3 + 1$ wt% Nb_2O_5 added E is roughly 600 v/cm and the grain size roughly 5 microns. The emf across a grain is thus about .3 volts. The band gap is about 3 eV. Thus the efficiency is

$$\simeq \frac{.3}{3} \simeq 10\%,$$

Which compares with an observed band gap efficiency of about 0.06%. The calculation, of course, depends on idealising assumptions, some of which may be practically obtainable.

PHOTOVOLTAIC MEMORY DEVICE

With the above background and general teachings of the unique discovery of the invention now firmly in mind, numerous and important applications of the properties of the ferroelectric ceramics above-discussed are readily possible as will be evident to those skilled in this art. For example, the device of the instant invention will be shown to exhibit particular utility as a memory apparatus, thus making use of the property of the ferroelectric ceramic defined as remanent polarisation or "memory” as previously explained.

With particular reference now to **Fig.26** of the application drawings, one such photovoltaic memory apparatus is disclosed, the memory apparatus being optically addressed. In this respect, a substrate or sheet of a ferroelectric ceramic material of the type above-discussed is indicated by reference numeral 10 as being "sandwiched" between at least one pair of electrodes such as electrodes **12** and **14** positioned on opposing sides of the substrate.

In the preferred embodiment as shown, an array of electrode pairs, such as pairs **12-14** and **16-18** are disposed on opposing sides of the substrate **10** as to define a matrix configuration. Information is put into the memory and particularly into the region of the substrate **10** lying between electrode pairs by temporarily applying a voltage pulse of a predetermined polarity between the electrode pairs, such pulse being provided by the Write Pulse Generator **20** coupled to the various electrodes and of typical construction. Specifically, if a positive voltage pulse was provided by the Write Pulse Generator **20** between electrode pairs **12-14**, with electrode **12** being presumed to be the positive electrode in this example, a remanent ferroelectric polarisation will take place in the region of substrate **10** lying between the crossed electrode pair, this remanent polarisation being in a direction and of a polarity dependent upon the polarity of the write pulse.

Similarly, if a negative voltage pulse was applied between electrode 16 on the one hand, and electrode 18 on the other hand, with electrode **16** in this instance being presumed to have the negative polarity, a remanent polarisation within the ferroelectric ceramic **10** will take place in the region disposed between the intersecting or crossed electrodes **16** and **18**. In a similar fashion, predetermined remanent polarisation can be produced individually in all of the regions of the ferroelectric ceramic **10** that are disposed between crossed electrode pairs of the matrix array in direct dependence upon the polarity of the write pulse voltage applied, this remanent ferroelectric polarisation constituting stored information in that such polarisation within the ceramic will remain until removed by the application of a write voltage pulse of opposing polarity.

In accordance with the teachings of the instant invention, these stored "bits" of information in the form of remanent ferroelectric polarisation within the various regions of the substrate **10** can be extracted or "read" by selectively illuminating the poled regions of the substrate with a beam of light, as preferably can be provided by a laser, for example. Upon illumination, the polarised regions of the ferroelectric ceramic will produce a photovoltaic current and voltage at an associated electrode pair, with the polarity of the photo-current and photo-voltage being dependent upon the "stored" remanent ferroelectric polarisation or "information" within the particular region of the substrate.

In the preferred embodiment of the device wherein a so-called matrix configuration of the electrode pairs are provided, the entire ferroelectric ceramic substrate can be scanned by the illuminating beam which is contemplated to be continuously swept in the fashion of a "light pencil" by a light beam scanner of conventional construction as is designated by reference numeral **22**, for example, light beam scanner **22** providing the sweeping illuminating beam designated by reference numeral **24**. Further, and in this particular embodiment, the illumination from the light beam **24** would be transmitted into the associated poled regions of the ferroelectric ceramic **10** by passing through electrodes **12**, **16** etc. disposed on the surface of the ceramic facing the illuminating beam, electrodes **12**, **16**, etc. being constructed so as to be transparent.

The generated photovoltaic currents and voltages at the electrode array would be detected by a synchronised detector designated by reference numeral **26** coupled to each of the electrode pairs, detector **26** being of conventional construction and serving to monitor the polarity of the photovoltaic currents and voltages developed in time synchronism with the light beam scanner **22**. Such synchronism can be effected through a direct coupling of the detector **26** to the light beam scanner **22** in typical fashion, or through the utilisation of an external computer clock, all in accordance with standardised matrix memory addressing techniques.

Optical Display Apparatus

The discovered properties of the ferroelectric ceramic substrate of the instant invention can further be applied in conjunction with liquid crystals to fabricate a novel display apparatus and, in this respect, attention is generally directed to **Fig.27** to **Fig.32** of the appended application drawings.

The operational principle associated with the fabrication of such optical displays relies upon the utilisation of the photovoltaic currents and voltages generated by substrates of a ferroelectric ceramic material to effect switching of the opacity state of a liquid crystal operating in the field - effect mode. This generalised combination will be seen to provide a write-in read-out memory and optical display. Both the liquid crystal and the ferroelectric ceramic effectively function as a memory, either in a binary or bi-stable mode having two possible states designated as an "on" state or an "off" state wherein the liquid crystal is switched from a substantially transparent condition to a substantially opaque condition, or in a multi-state mode by which the transmission characteristics of the liquid crystal are varied through many states to effect a so-called gray scale display.

With particular reference to **Fig.27** of the application drawings, a typical optical display device following the general teachings of the instant invention is shown, such display device providing so-called dark spot display capabilities. As depicted in **Fig.27**, a twisted nematic liquid crystal is designated by reference numeral **28**, such crystal being sandwiched between two transparent electrodes **30** and **32**.

As is known, the twisted nematic liquid crystal **28** will vary its transmission characteristic to incident light dependent upon the polarity and magnitude of a voltage applied across electrodes **30** and **32**. Specifically, the twisted nematic liquid crystal **28** serves to transmit illumination through it as long as there is no voltage across electrodes **30** and **32**. In conjunction with the twisted nematic liquid crystal **28**, a linear polariser **34** is provided, as is an analyser **36** of conventional construction. The linear polariser **34** and the analyser **36** are crossed so that no light passes through the combination to a diffuse reflector **38** except for the fact that the twisted nematic liquid crystal cell interposed between them rotates the polarisation of the incident illumination by 90^0 so as to allow passage of light. Application of a voltage across the cell electrodes **30** and **32** destroys the ability of the liquid crystal cell **28** to rotate the plane of the polarisation of the illumination and the illumination is consequently absorbed in the analyser **36** rather than transmitted and reflected off the diffuse reflector **38**.

Accordingly, when voltage is applied across electrodes **30** and **32**, a dark colour of the liquid cell would be displayed in so-called dark spot display. The magnitude of the display is dependent upon the magnitude of the applied voltage, such that a voltage applied across cell electrode **30** and **32** less than a characteristic amount necessary to effect full plane rotation will only partially reduce the rotating ability of the liquid crystal **28** thereby resulting in only a partial extinction of illumination and the generation of a gray-scale display. The above discussion of the operation of a so-called twisted nematic liquid crystal is entirely conventional.

To obtain the switching voltage for application to the cell electrodes **30** and **32**, a substrate of a ferroelectric ceramic designated by reference numeral **40** it utilised, the substrate **40** being sandwiched between electrodes **42** and **44** as shown, ceramic substrate **40** being disposed such that the illustrated illumination impinges not only on the liquid crystal **28**, but also on the ceramic substrate. As illustrated, electrodes **42** and **44** of the ceramic substrate **40** are respectively coupled to the transparent electrodes **30** and **32** of the twisted nematic liquid crystal cell **28**.

Initially, a polarisation voltage is applied to the ferroelectric ceramic substrate **40** across the associated electrodes **42** and **44**, such voltage being in the form of a pulse and serving to produce a remanent polarisation in the direction of the arrow shown within the substrate. Subsequently, and in accordance with the teachings of the invention, when the substrate **40** is illuminated, a current will flow in a circuit connecting terminal **42** to terminal **30** of the liquid crystal cell **28**, through the cell **28** to electrodes **32**, and then to terminals **44** of the ceramic substrate **40**, this current being a photovoltaic current proportional to the magnitude of the remanent polarisation effected within the ferroelectric ceramic by the initial application of the polarisation voltage pulse.

The magnitude of the photovoltaic current can be varied in accordance with the generalised teachings of the instant invention discussed at the outset by simply varying the magnitude of the initial polarising pulse. The so-called gray-scale display capability of the light transmission characteristics of the liquid crystal **28** is provided simply through a pre-selection of the magnitude of the remanent polarisation produced and, of course, assuming a constant intensity illumination. The memory characteristics of the ferroelectric ceramic **40** are inherently brought about in that the value of the photovoltaic current can be changed only through the application of another polarising pulse. Thus, the generalised apparatus of **Fig.27** functionally constitutes an apparatus which effects an optical display of the state of the memory within ferroelectric ceramic substrate **40**.

In the embodiment as described in **Fig.27**, a so-called "dark spot display" was effected. In the event that a so-called "bright spot" is desired to appear during the "on" state of the liquid crystal in transmission or reflection, polariser **34** and analyser **36** would be disposed in a parallel relationship with respect to one another, rather than crossed. Further, and although the basic embodiment above-discussed refers to the utilisation of liquid crystals of the twisted nematic type, similar results can be obtained with so-called colour switching crystals which, in like fashion, alter their light transmission characteristics to incident polarised light in response to the application of a voltage across them.

In accordance with the generalised teachings of **Fig.27**, various other forms of optical displays can be constructed. For example, and with particular reference to **Fig.28** of the application drawings, a different form of combined memory and optical display apparatus is illustrated, this apparatus making use of a colour switching liquid crystal 46 instead of the twisted nematic liquid crystal **28** of **Fig.27**. As was explained above, the colour switching liquid crystal such as crystal **46** serves to alter its light transmission characteristics to incident polarised light, and it is for this reason that the light source illustrated in **Fig.28** is defined as being polarised illumination, although it is to be understood that in this embodiment, as well as in the following embodiments to be discussed which use colour switching liquid crystals, a non-polarised light source can be provided if a linear polariser is disposed within the apparatus on the side of the liquid crystal nearest the incoming illumination.

The display apparatus of **Fig.28** defines a so-called monolithic structure as opposed to the exemplary structure of **Fig.27** wherein the liquid crystal was physically spaced from the energising ferroelectric ceramic. In **Fig.28**, a "sandwich" construction is provided comprising a face plate **48**, a transparent electrode **50** coupled to ground, the colour switching liquid crystal **46**, a slab or substrate of a ferroelectric ceramic **52**, and a plurality of electrodes such as electrodes **54** coupled to the ferroelectric ceramic **52** in an array.

When a short voltage pulse is initially applied between the ground electrode **50** and one of the polarity of rear electrodes **54**, the region of the liquid crystal **46** immediately in front of the rear electrode **54** will become transparent resulting in a potential appearing between the semi-transparent ground electrode **50** and the rear electrode **54** due to the incident illumination. In this instance, the ferroelectric ceramic material **52** would preferably be a transparent ceramic, such as 0.020 inch disk of 8.5/65/35 PLZT with a grain size of 6 microns, polarised in the thickness direction and producing a photo-emf of about 30 volts and a short circuit current of 10^{-7} amperes/cm.sup.2 per watt per cm.sup.2 input at 388 nm, for example. Further, the rear electrodes **54** are contemplated to be of a transparent variety, such as indium oxide 50 that a display can be provided in transmission.

A further variant of the operation of the device of **Fig.28** is possible, eliminating the necessity for the initial application of a short voltage pulse between the ground electrode **50** and one of the plurality of rear electrodes **54** to commence the process of clearing of the liquid crystal **46**. In this respect, and in addition to the normally provided uniform polarised illumination, an additional intense source of light providing a thin beam such as a laser would be provided, the laser constituting a so-called "light pencil". Upon application of the intense pencil beam of light of the apparatus of **Fig.28**, such intense light would penetrate the liquid crystal even in its nominally closed state thus illuminating the ferroelectric ceramic **52**, such illumination causing a photo-voltage to be generated as above-discussed which would then appear across the liquid crystal in the region of the intense light beam causing that region to become transparent and allowing the uniform polarised illumination to penetrate into that region, such uniform illumination further clearing the crystal in a regenerative process. This would result in a clear region which looked bright under reflected light, and a current flowing from the associated rear electrode **54** to ground, for example, through a non-illustrated resistor that would be provided. With this modification, the intense beam of light constituting the "light pencil" can be utilised to actually enter a line drawing into the display, with a point by point read-out being provided.

As opposed to obtaining a point-by-point electrical read-out, the image written-in by the "light pencil" can be externally projected. In this respect, and as explained, the "image" constitutes transparent sections of the liquid crystal. If a light source such as a tungsten-halogen lamp normally associated with projectors was additionally provided to illuminate the display apparatus from the "rear" thereof in a direction opposing the direction of the incident polarised illumination, such auxiliary light source would pass through the display apparatus at the transparent regions, much in the same manner as a photographic slide is projected, the projection image being displayed on a suitable screen. In this instance, of course, a ferroelectric ceramic material that is transparent would be required, such as the material known as PLZT 7/65/35.

As can further be appreciated, the memory characteristics of the optical display of **Fig.28** are not permanent. If domain switching and a permanent memory capability is desired, an alternative electrode configuration would be required in the fashion illustrated in **Fig.30** of the application drawings, components of the apparatus of **Fig.30** that are the same as those of **Fig.28** being represented by the same reference numerals. Specifically, an additional transparent electrode **56** would be disposed between the colour switching liquid crystal **46** and the ferroelectric ceramic **52** polarisation within the ferroelectric ceramic **52** being effected by the application of a voltage pulse across electrodes **54** and **56**, and with an additional grounding electrode **52** being provided on the ceramic **52** as is shown so as to couple one end of the ferroelectric ceramic **52** to the transparent electrode **50**.

If a twisted nematic liquid crystal were desired to be utilised in the generalised configuration of the optical display of **Fig.28**, a still further modification of the electrode arrangement would be needed and, in this respect, attention is directed to **Fig.29** of the application drawings. Like parts in this figure are again represented by the same reference numerals.

Initially, since a twisted nematic liquid crystals alters its light transmissions characteristics by rotating the plane of the polarisation of the illumination, a further polariser such as analyser **60** is required to be disposed between the ferroelectric ceramic **52** and the liquid crystal **46**, the crystal **46** thereby being properly responsive to incoming polarised illumination either provided directly by a polarised source, or provided through the utilisation of a non-polarised illumination source in conjunction with a polariser such as polariser **34** of the embodiment of **Fig.27**. Additionally, a light transmitting electrode **62** would be disposed on the surface of the analyser **60** immediately adjacent the liquid crystal **46**, transparent electrode 62 being coupled through the analyser and the ferroelectric ceramic substrate **52** to an associated rear electrode 54. Each of the rear electrodes **54** of the array would have associated therewith an additional transparent electrode **62** in similar manner.

If the analyser **60** was constructed to be crossed with the incoming polarised illumination, the liquid crystal **46** would normally transmit light through it and, upon the application of a voltage between electrode **54** and the front transparent electrode **50**, would cause the apparatus to provide a so-called "dark spot display." Alternatively, if the incoming polarised light has a plane of polarisation parallel to the polarisation plane of analyser **60**, a so-called "bright spot display" would result. It should further be appreciated that the embodiment of **Fig.29** can be utilised with a "light pencil" to provide a functional operation similar to that discussed with respect to **Fig.28**.

Attention is now directed to **Fig.31** of the application drawings wherein an illustration is provided of an optical display array utilising a liquid crystal **64** of the colour switching type. Each of the units shown is contemplated to represent one of the horizontal row in an overall array. The structure illustrates is in monolithic form and, as shown, constitutes a polarity of superposed layers. Specifically, a transparent electrode **66** is provided, behind which is the liquid crystal **64** disposed between two face plates **68** and **70**. A transparent electrode structure **72** is provided imbedded at one end with the liquid crystal **64** and coupled at the other end to one end of the ferroelectric ceramic substrate **74** as is shown. The other end of each ferroelectric ceramic slab **74** is commonly coupled to ground along with the front transparent electrode 66 as was discussed.

With the embodiment of **Fig.31**, each ferroelectric ceramic substrate **74** would be initially polarised by the application of a polarising voltage pulse between the representative terminals or electrodes **76** and **78**, for example. Now, upon the application of illumination to the ferroelectric ceramic, a photovoltaic voltage will be generated which appears between the front transparent electrode **66** and the rear transparent electrode **72** causing the liquid crystal **64** between these electrodes to become transparent.

Liquid crystal **64** would normally be in a nominally opaque state. However, sufficient light would be transmitted through the liquid crystal material so as to produce the photo-voltage in the ferroelectric ceramic **74**, which photo-voltage applied to the electrodes **66** and **72** in a positive feed-back arrangement serves to increase the transparency of the colour switching liquid crystal **64** in the region between the electrodes. This increased transparency, in turn, increases the voltage output of the ferroelectric material **74** which further increases the transparency of the liquid crystal **64** such that a transparent region would be formed appearing as a bright spot with reflected light. The surface of the ferroelectric ceramic **74** would in this instance serve itself as a diffuse reflector which would be required by a display function in the reflection mode.

Further, it should be appreciated that a certain threshold light transmission of the liquid crystal **64** would be required to begin this process of creating a transparent region. If the liquid crystal is sufficiently thick, the transmitted light through the crystal in its normally opaque state would be insufficient to commence this clearing process and an applied voltage would be initially necessary across the crystal to commence the process, this voltage being used as a "read" signal.

As can be appreciated, the remanent polarisation of the ferroelectric ceramic material **74** in the embodiment depicted in **Fig.31** is along the length of the ceramic substrate. An alternate arrangement is possible wherein the memory writing is accomplished by altering the remanent polarisation of the ferroelectric ceramic in the thickness direction. In this respect, reference is once again made to **Fig.30** of the application drawings illustrating the disposition of a ferroelectric ceramic **52** in conjunction with the colour switching liquid crystal **46** such that the remanent polarisation of the ceramic is achieved in the thickness direction, and such that permanent memory characteristics are imparted. With this arrangement, the incident illumination would be quickly absorbed in the surface of the ferroelectric ceramic material but would still penetrate sufficiently so as to produce relatively large photovoltaic voltages.

Finally, the optical display device of **Fig.31** can be constructed with a twisted nematic liquid crystal as opposed to the colour switching liquid crystal of **Fig.31** and attention is herein directed to **Fig.32** of the application drawings. Again, components of the apparatus of **Fig.32** which are similar to those in **Fig.31** are represented by the same reference numeral.

In this embodiment, a polariser **80** would initially be provided so as to polarise the incoming illumination. In a fashion similar to the generalised embodiment of **Fig.27**, an analyser **82** would likewise be provided, polariser **80** and analyser **82** being assumed to be parallelly disposed. Incoming polarised light will not impinge on the ferroelectric ceramic material **74** because the twisted nematic crystal **64** would rotate the plane of the polarisation of the illumination by 90^0 and such illumination would thus be absorbed in analyser **82**. The display unit, accordingly, would initially be in an "off" or dark state and no voltage would exist across the terminals or electrodes **76** and **78** of the ferroelectric ceramic.

The "on" of the display apparatus would be bright under reflected illumination and would be indicated by the appearance of a DC voltage across terminals **76** and **78**. The unit would be switched to the "on" stage through the application of an initial polarising voltage pulse between electrodes **76** and **78**. The twisted nematic liquid crystal would now lose its ability to rotate the plane of polarisation of the illumination and light would fall on the surface of the now-polarised ferroelectric ceramic material **74** such that the ceramic would generate a steady, high photovoltaic voltage which would appear across the electrodes of the liquid crystal. This photovoltaic voltage would prevent the liquid crystal from returning to the twisted phase and the liquid crystal would thus remain transparent and a voltage potential would be maintained across the electrodes for the duration of the illumination.

The display apparatus can be returned to its dark state simply by shorting across terminals **76** and **78** and the crystal cell would return to its opaque condition with no voltage appearing across the electrodes. A new external voltage pulse would be required across electrodes **76** and **78** to again switch the unit on. It should be appreciated that only a momentary voltage pulse is required to turn the display unit on, and only a momentary short circuit is needed to turn the unit off.

If the incident illumination were interrupted, the display unit would likewise be put into an "off" state. The memory characteristics of the display apparatus thus are volatile in the sense that a removal of illumination will put the display unit into an "off" state. Permanent memory characteristics can be obtained by depoling the ferroelectric ceramic **74** with additional circuitry and the illumination could then be interrupted. When illumination is restored, a voltage pulse would switch "on" only those units of the array which were in an "on" state at the time of interruption of illumination, since only the polarised ferroelectric ceramic units will produce a photo-voltage. The depoled units can then be repoled without switching them "on", utilising a suitable circuit to apply a polarising voltage to the ceramic but not to the liquid cell to therefore retain the liquid crystal cell in its dark state as it was at the time the illumination was removed.

Many other different embodiments combining a liquid crystal display with the ferroelectric ceramic substrate of the instant invention can be fabricated along the generalised teachings referred to above. From the standpoint of materials selection, PLZT is desired when a transparent ferroelectric ceramic is required, and other ferroelectric ceramics such as $Pb(Zr_{0.53}Ti_{0.47})O_3$ + 1% by weight of Nb_2O_5 (i.e. PZT-5), a solid solution of lead titanate, and lead zirconate can be utilised when relatively cheap "opaque" materials are acceptable. With the display devices as above-discussed, typical thickness of the ferroelectric ceramic material are on the order of 0.020 inches. In accordance with the generalised teachings appearing at the outset of this specification, it is to be appreciated that the photovoltaic output of the ferroelectric ceramic material is proportional to the material length and, the higher the photovoltaic output, the faster the switching time of the associated liquid crystal.

A further form of optical display apparatus is contemplated herein by which the previously discussed photoconductive properties of ferroelectric ceramic materials are utilised in the formation of display apparatus. As will be recalled and appreciated, the resistivity of typical ferroelectric ceramic materials varies as a function of the illumination incident thereon and thus, the voltage drop across illuminated regions of a ferroelectric ceramic substrate that has a polarising voltage applied thereto would be less than the voltage drop across non-illuminated or dark regions of the ceramic. Attention in this respect is directed to **Fig.33** of the application drawings.

The display device depicted in **Fig.33** is such that a photograph in the form of a projected image can be stored in a ferroelectric ceramic sheet or substrate **84** as a pattern of poled ferroelectric regions where the remanent polarisation of such regions is simply related to the intensity of the projected image at that point. The pattern of poled regions can be produced by the already discussed technique of a photoconductive ferroelectric sandwich, or by utilising the photoconductive properties of ferroelectric materials directly.

In the embodiment of **Fig.33**, an image is projected onto a ferroelectric-photoconductive substrate **84**, which substrate is backed by a sheet of resistive material **86** such as evaporated carbon, semiconductor material or the like. A transparent front electrode **88** forming a ground plane covers the surface of the ferroelectric material **84**, which material is of the type which would exhibit a sizable polarisation dependent photovoltaic effect. A further electrode **90**, covers the rear surface of the resistive material **86**, and a polarising voltage would be applied to the apparatus between electrodes **90** and **83**.

With such an arrangement the voltage drop will be seen to exist across those regions of the ferroelectric substrate **84** which are illuminated will be less than the voltage drop apparent across the non-illuminated or dark regions. As such the lower remanent polarisation within the ferroelectric material will be effected than in those regions of the ferroelectric material that are not illuminated by the projected image. Accordingly a "negative" of the projected image would thus be stored in the ferroelectric substrate or sheet **84** as regions of varying remanent polarisation. In that the ferroelectric **84** is photovoltaic having polarisation dependent photo-voltages as discussed this stored image is now read out electrically utilising the techniques already described with respect to the embodiments of the invention illustrated in **Fig.26** of the application drawings or **Fig.28** et. seq. of the application drawings. It is displayed by applying the photo-voltages from regions of polarisation in which the image is effectively stored to liquid crystal electrodes as for example is illustrated in **Fig.34** of the application drawings where illumination sufficiently strong penetrates the dark liquid crystal **93**, to in a regenerative fashion, apply the photo-voltage from polarised region **91**, to the liquid crystal region immediately adjacent varying in intensity depending on the value of the polarisation. A negative image is produced in reflection.

High Voltage Battery

The teaching in this patent may be applied toward the provision of a novel high voltage battery serving to convert radiation such as X-radiation in this instance, directly into electrical energy. In this respect, a block or substrate of ferroelectric ceramic material would again be provided to which electrodes are attached in the identical fashion as was discussed with respect to the basic physical configuration of the invention illustrated in **Fig.1** of the application drawings. An example of the constituent material of the ferroelectric ceramic in this instance is solid solution PZT-5A consisting of 53 mole percent $ZrTiO_3$ and 47 mole $PbTiO_3$ with 1 percent by weight of niobium added such as Nb_2O_5. This ferroelectric ceramic material would be poled in the usual fashion by the application of a high voltage applied across the electrodes.

To function as a battery, the ceramic material can contain a radioactive component and this can be all or a portion of any of the above-discussed constituent elements. For example, the material may be fabricated with a radioactive isotope of Zr,TiO, Nb, etc., or a radioactive additive can be added to the composition. Alternatively, the composition may be placed next to a strong radioactive source and, for example, could actually be coated with a radioactive material. The primary requirement is that a flux of gamma rays or X-rays within the material be produced, which radiation has the effect of ionising the ferroelectric ceramic material so as to produce non-equilibrium carriers.

Thus, in the instance of the application of a poled ferroelectric ceramic material as a high voltage battery, an external light source would not be required as the ionising source in that the non-equilibrium carriers would be produced by the internal ionisation of the ferroelectric ceramic material effected by the radiation and would result in an emf which would appear across the electrodes.

Accordingly, an open circuit voltage proportional to the length of the ferroelectric ceramic material between the electrodes and inversely proportional to average grain size, and the like as was discussed at the outset of this specification would be produced by the gamma or X-radiation. Similarly, a short circuit current proportional to the electrode area and the net (steady state) increment of excess carriers introduced into the conduction band would likewise be produced, this being related to the intensity of the ionising radiation.

As can be appreciated, the emf would persist as long as the ionising radiation persisted and, extrapolating from the detailed photo-effect results, the emf produced by this high voltage battery would be relatively independent of the intensity of the radiation and thus not strongly dependent on the half-life of the radioactive material.

While there has been shown and described several preferred embodiments and applications of the basic invention hereof, those skilled in the art should appreciate that such embodiments are exemplary and not limiting and are to be construed within the scope of the following claims:

CLAIMS

1. A photovoltaic memory apparatus comprising: a substrate of a ferroelectric ceramic; means for selectively applying a voltage pulse of a predetermined polarity across a region of said substrate to thereby effect a remanent ferroelectric polarisation in said region of said substrate representative of the information to be stored; means for selectively illuminating said poled region of said substrate with a source of radiation, whereby a photovoltaic voltage is produced at said region of a polarity dependent upon said predetermined polarity of said polarising voltage pulse; and means for detecting said photovoltaic voltage whereby the stored information is retrieved.

2. A memory apparatus as defined in claim 1, wherein an array of electrode pairs are disposed on opposing sides of said substrate to define a matrix configuration of poled regions, said polarising voltage pulse being applied across selected electrode pairs, and wherein said information reading means scans said matrix configuration in accordance with a desired pattern, said detecting means being coupled to said array of electrode pairs and being synchronised with said information reading means.

3. A memory apparatus as defined in claim 1, wherein said substrate is sandwiched between at least one electrode pair and one electrode of said electrode pair is transparent such that said illumination from said information reading means passes through it into said respective poled region of said substrate.

4. A method of addressing and storing information utilising a substrate of a ferroelectric ceramic as a memory core, said method comprising the steps of initially effecting a remanent electrical polarisation in regions of the ferroelectric ceramic by the application of a voltage pulse across the regions of the substrate, the voltage pulse having at least one of a polarity and magnitude representative of the information to be stored; addressing the memory core while illuminating the polarised regions of the ferroelectric ceramic substrate with a source of radiation; and detecting at least one of the polarity and magnitude of the photovoltaic current and voltage produced by such illumination upon the polarised regions, the polarity and magnitude being dependent upon the polarity and magnitude of the initial polarising voltage pulse whereby the stored information is recovered.

5. An optical apparatus comprising in combination: an electro-optic means providing variable light transmission characteristics in response to the magnitude and polarity of an applied voltage; a substrate of a ferroelectric ceramic; means for applying a polarising voltage pulse of a predetermined magnitude and polarity across said substrate to effect a remanent electrical polarisation within said substrate; means for illuminating said electro-optic means and said ceramic substrate, illumination impinging upon said substrate effecting the generation by said substrate of a photovoltaic current and voltage having a polarity dependent upon the polarity of said polarising voltage pulse; and means for applying said generated photovoltaic voltage to said electro-optic means, whereby the transmission characteristics of said electro-optic means to the illumination impinging thereon is varied to effect a visual display.

6. A display apparatus as defined in claim 5, wherein the light transmission characteristics of said electro-optic means is switched from a relatively low opacity to a relatively high opacity upon application thereto of said generated photovoltaic voltage.

7. A display apparatus as defined in claim 5, wherein the light transmission characteristics of said electro-optic means is switched from a relatively high opacity to a relatively low opacity upon application thereto of said generated photovoltaic voltage.

8. A display apparatus as defined in claim 6, wherein said relatively low opacity is of a value such that said electro-optic means is substantially transparent, said relatively high opacity being of a value such that said electro-optic means is substantially opaque.

9. A display apparatus as defined in claim 7, wherein said relatively low opacity is of a value such that said electro-optic means is substantially transparent, said relatively high opacity being of a value such that said electro-optic means is substantially opaque.

10. A display apparatus as defined in claim 5, wherein the magnitude of said polarising voltage is selected such that the light transmission characteristics of said electro-optic means is switched between varying opacities to define a gray scale.

11. A display apparatus as defined in claim 33, wherein said electro-optic means is a liquid crystal of the twisted nematic type.

12. A display apparatus as defined in claim 5, wherein said electro-optic means is a liquid crystal of the colour switching type.

13. A display apparatus as defined in claim 11, wherein said liquid crystal is sandwiched between a light polariser and a light analyser.

14. A display apparatus as defined in claim 5, wherein said electro-optic means and said ferroelectric ceramic substrate are disposed in superposition to define a monolithic structure.

15. A display apparatus as defined in claim 14, wherein said electro-optic means is a colour switching liquid crystal disposed in superposition with said ceramic substrate to define a monolithic structure, and wherein said means for applying a polarising voltage to said substrate and said means for applying said photovoltaic voltage to said liquid crystal comprises a plurality of electrodes disposed on opposite faces of said structure with said structure being sandwiched between them, at least one electrode pair being in contact with said liquid crystal and with said ceramic substrate, respectively; said electrode of said pair which is in contact with said liquid crystal being transparent.

16. A display apparatus as defined in claim 14, wherein said monolithic structure constitutes a plurality of stacked superposed layers comprising a first transparent electrode, an electro-optic means, a second transparent electrode, said substrate of a ferroelectric ceramic, and a third electrode, said third electrode being coupled to said first electrode, said means for applying said polarising voltage being defined by said second and third electrodes, said means for applying said generated photovoltaic voltage being defined by said first and second electrodes, and wherein said means for illuminating said electro-optic means and said substrate comprises a light beam directed to impinge upon said first transparent electrode.

17. A display apparatus as defined in claim 16, wherein said electro-optic means is a liquid crystal of the colour switching type.

18. A display apparatus as defined in claim 16, wherein said plurality of stacked layers further includes a polariser disposed over said first transparent electrode, and an analyser disposed between said second transparent electrode and said ceramic substrate, said electro-optic means being a liquid crystal of the twisted nematic type.

19. A display apparatus as defined in claim 16, wherein said illumination means comprises a source of polarised light, said plurality of stacked layers including an analyser disposed between said second transparent electrode and said ceramic substrate, said electro-optic means being a liquid crystal of the twisted nematic type.

20. A display apparatus as defined in claim 19, wherein said analyser is disposed in a direction parallel to the plane of polarisation of the incident illumination.

21. A display apparatus as defined in claim 19, wherein said analyser is disposed so as to be crossed with respect to the plane of polarisation of the incident illumination.

22. A method of electrically storing optical information comprising the steps of: projecting an image constituting the optical information onto a sandwich of a ferroelectric ceramic backed by a layer of resistive material to form an illumination pattern thereon; applying a voltage pulse across the sandwich whereby varying remanent polarisations within the ferroelectric ceramic are produced in dependence upon the illumination pattern.

23. The method of claim 22, further including the step of reading out the remanent polarisations to thereby extract the stored optical information.

24. A display apparatus as defined in claim 5, wherein said variation of the transmission characteristics of the electro-optic means ensures that illumination continues to impinge upon said substrate to latch said electro-optical means and maintain said transmission variation thereof.

25. A method of electrically storing optical information comprising the steps of: projecting an image constituting the optical information onto a ferroelectric ceramic layer to form an illumination pattern thereon and thereby alter the resistivity of the ceramic layer in accordance with said pattern; applying a voltage pulse across the ceramic whereby varying remanent polarisations within the ferroelectric ceramic are produced in dependence upon the illumination pattern.

CHARLES FLYNN: MAGNETIC FRAME

Patent US 6,246,561 12th June 2001 Inventor: Charles J. Flynn

METHODS FOR CONTROLLING THE PATH OF MAGNETIC FLUX FROM A PERMANENT MAGNET AND DEVICES INCORPORATING THE SAME

This patent covers a device which is claimed to have a greater output power than the input power required to run it.

ABSTRACT

A permanent magnet device includes a permanent magnet having north and south pole faces with a first pole piece positioned adjacent one pole face thereof and a second pole piece positioned adjacent the other pole face thereof so as to create at least two potential magnetic flux paths. A first control coil is positioned along one flux path and a second control coil is positioned along the other flux path, each coil being connected to a control circuit for controlling the energisation thereof. The control coils may be energised in a variety of ways to achieved desirable motive and static devices, including linear reciprocating devices, linear motion devices, rotary motion devices and power conversion.

DESCRIPTION

FIELD OF THE INVENTION

This invention relates generally to permanent magnet devices and more particularly, to a permanent magnet control component in which the flow of flux from a permanent magnet is controlled between two or more flux paths by utilising timed delivery of electrical signals through one or more coils placed along at least one of the flux paths. Such permanent magnet control components may take on a variety of configurations facilitating use of such components in a variety of applications including applications involving the production of reciprocating, linear, and rotary motion and power conversion. Several novel permanent magnet rotary motion devices of motor constructions which operate by controlling the path of magnetic flux from one or more permanent magnets are described, such permanent magnet rotary motor constructions having increased efficiency and more desirable torque characteristics as compared to many currently used motors.

BACKGROUND OF THE INVENTION

Magnetic force of attraction is commonly used in a variety of types of permanent magnet devices including both linear and rotary motors. In the field of such permanent magnet devices there is a continuous pursuit of increased efficiency and reduced complexity.

Accordingly, an object of the present invention is to provide a permanent magnet control component in which the path of a given level of permanent magnet flux can be controlled by a lesser level of electromagnetic flux.

Another object of the present invention is to provide a permanent magnet control component in which substantially all of the flux from a permanent magnet can be switched between at least two different flux paths of the permanent magnet control component so as to enable useful work in the form of linear, reciprocating, and rotary motion.

Still another object of the present invention is to provide permanent magnet control components and motor constructions in which flux path control is provided by energising an 10 electromagnet to oppose the magnetic flux of one or more permanent magnets.

Another object of the present invention is to provide permanent magnet control components and motor constructions in which flux path control is provided by energising an electromagnet to aid the magnetic flux of one or more permanent magnets.

Yet another object of the present invention is to provide permanent magnet motor 15 constructions with improved operating characteristics.

SUMMARY OF THE INVENTION

These and other objects of the invention are attained by an apparatus which, in one aspect, is a permanent magnet device, comprising a permanent magnet having north and south pole faces, a first pole piece, a second pole piece, a first control coil, a second control coil, and circuit means, the first pole piece positioned adjacent the north pole face of the permanent magnet and including a first path portion, a second path portion and a third portion, the first path portion extending beyond a perimeter of the north pole face and the second path portion extending beyond the perimeter of the north pole face to define first and second flux paths for magnetic flux emanating from the north pole face of the permanent magnet, the first path portion of the first pole piece connected to the second path portion of the first pole piece by the third portion which extends across the north pole face of the permanent magnet, the second pole piece positioned adjacent the south pole face and including a first path portion and a second path portion, the first path portion extending beyond a perimeter of the south pole face and substantially aligned with the first path portion of the first pole piece, the second path portion extending beyond the perimeter of the south pole face and substantially aligned with the second path portion of the first pole piece, the first control coil positioned around the first path portion of the first pole piece, the second control coil positioned around the second path portion of the first pole piece, the circuit means connected to each of the first control coil and the second control coil to alternately energise the first coil and the second coil in a timed sequential manner.

Another aspect of the present invention provides a method for controlling the path of magnetic flux from a permanent magnet which involves placing a first pole piece adjacent a first pole face of the permanent magnet so as to have at least first and second path portions extending beyond a perimeter of the first pole face. A second pole piece is placed adjacent a second pole face of the permanent magnet so as to include at least one portion which substantially aligns with the first and second path portions of the first pole piece. A first control coil is placed along and around the first path portion of the first pole piece and a second control coil is placed along and around the second path portion of the first pole piece. The first control coil is repeatedly energised in a permanent magnet magnetic flux opposing manner so as to prevent magnetic flux of the permanent magnet from traversing the first path portion of the first pole piece, and the second control coil is repeatedly energised in a permanent magnet magnetic flux opposing manner so as to prevent magnetic flux of the permanent magnet from traversing the second path portion of the first pole piece.

Yet another aspect of the present invention provides a method for controlling the path of magnetic flux from a permanent magnet by placing a first pole piece adjacent a first pole face of the permanent magnet so as to have at least first and second path portions extending beyond a perimeter of the first pole face. A second pole piece is placed adjacent a second pole face of the permanent magnet so as to include at least one portion which substantially aligns with the first and second path portions of the first pole piece. A first control coil is placed along and around the first path portion of the first pole piece, and a second control coil is placed along and around the second path portion of the first pole piece. The following steps are alternately performed in a repeated manner:

(i) energising the first control coil in a permanent magnet magnetic flux aiding manner so as to couple with substantially all magnetic flux of the permanent magnet such that substantially no magnetic flux of the permanent magnet traverses the second path portion of the first pole piece when the first control coil is so energised; and

(ii) energising the second control coil in a permanent magnet magnetic flux opposing manner so as to couple with substantially all magnetic flux of the permanent magnet such that substantially no magnetic flux of the permanent magnet traverses the first path portion of the first pole piece when the second control coil is so energised.

A further aspect of the present invention provides method for controlling the path of magnetic flux from a permanent magnet by placing a first pole piece adjacent a first pole face of the permanent magnet so as to have at least first and second path portions extending beyond a perimeter of the first pole face, and placing a second pole piece adjacent a second pole face of the permanent magnet so as to include at least one portion which substantially aligns with the first and second path portions of the first pole piece. A first control coil is placed along and around the first path portion of the first pole piece, and a second control coil is placed along and around the second path portion of the first pole piece. The following steps are alternately performed in a repeated manner:

(i) energising the first control coil in a permanent magnet magnetic flux aiding manner so as to couple with substantially all magnetic flux of the permanent magnet such that substantially no magnetic flux of the permanent magnet traverses the second path portion of the first pole piece when the first control coil is so energised; and

(ii) energising the second control coil in a permanent magnet magnetic flux opposing manner so as to couple with substantially all magnetic flux of the permanent magnet such that substantially no magnetic flux of the permanent magnet traverses the first path portion of the first pole piece when the second control coil is so energised.

BRIEF DESCRIPTION OF THE INVENTION

For a better understanding of the present invention reference may be made to the accompanying drawings in which:

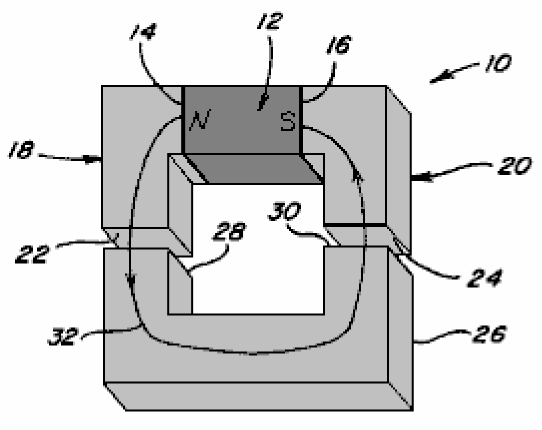

Fig. 1

Fig.1 is a perspective view of a magnetic device in which the magnetic flux from a magnetic member traverse a single path to produce a coupling force;

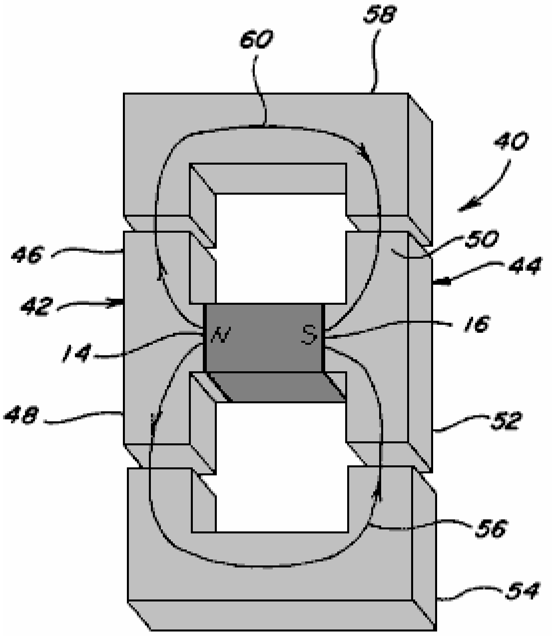

Fig. 2

Fig.2 is a perspective view of a magnetic device in which the magnetic flux from a magnetic member splits between two paths;

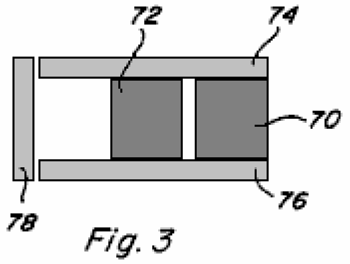

Fig. 3

Fig.3 is a side view of two magnetic members arrange in parallel between pole pieces;

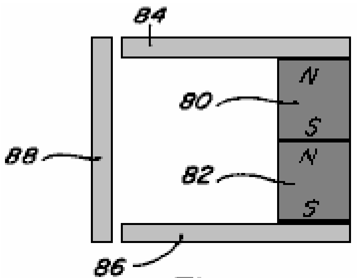

Fig. 4

Fig.4 is a side view of two magnetic members arranged in series between pole pieces;

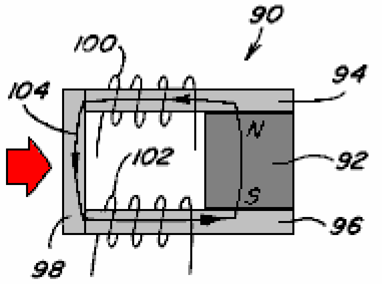

Fig. 5

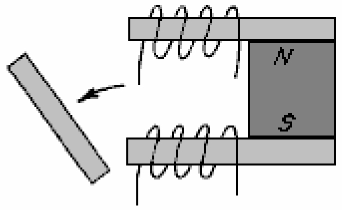

Fig. 6

Fig.5 and **Fig.6** are side views of a permanent magnet device including a permanent magnet having pole pieces positioned against the pole faces thereof and including a movable armature;

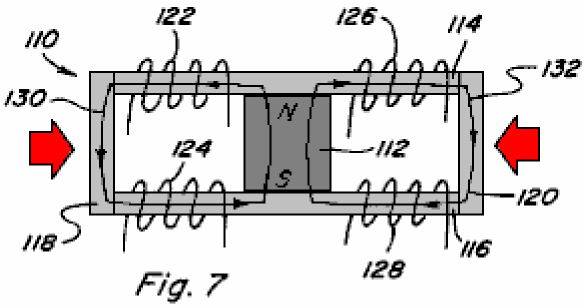

Fig. 7

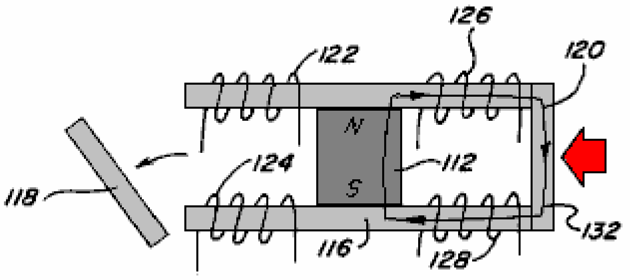

Fig. 8

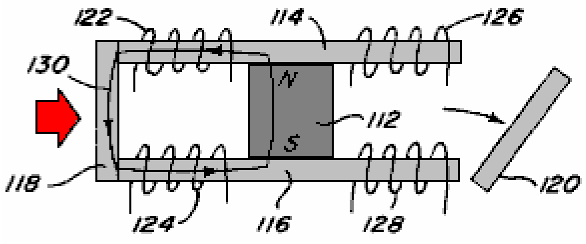

Fig. 9

Fig.7, **Fig.8** and **Fig.9** are side views of a permanent magnet device including a permanent magnet having pole pieces positioned against the pole faces thereof to provide two magnetic flux paths and including a movable armature which can be positioned along each magnetic flux path;

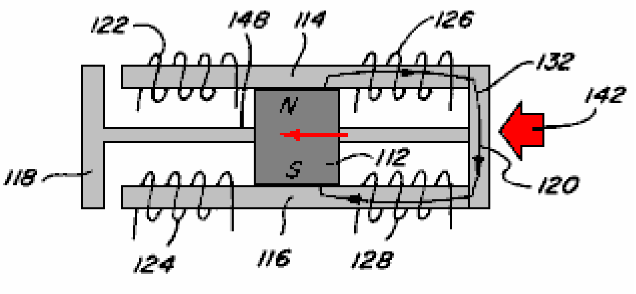

Fig. 10

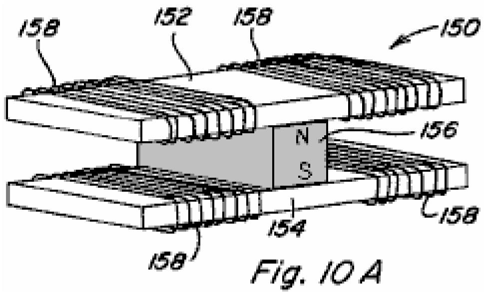

Fig. 10 A

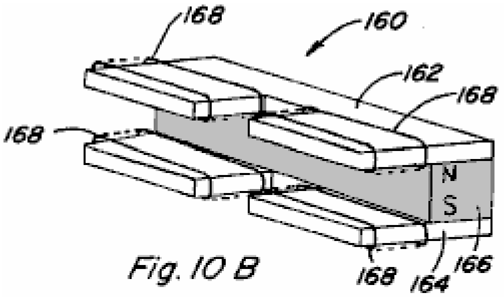

Fig. 10 B

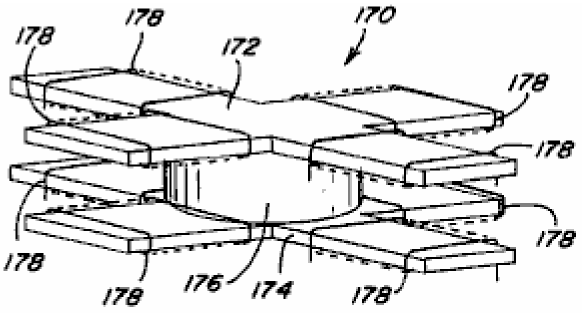

Fig. 10 C

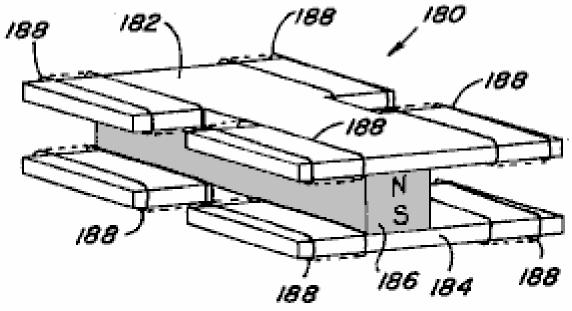

Fig. 10D

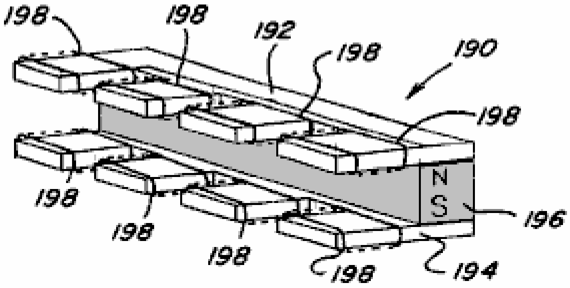

Fig. 10 E

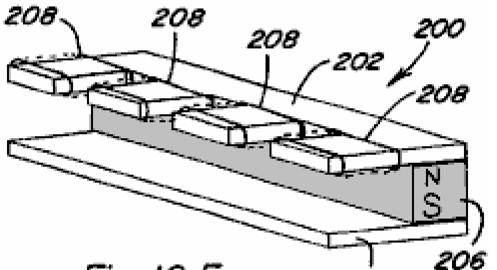

Fig. 10 F

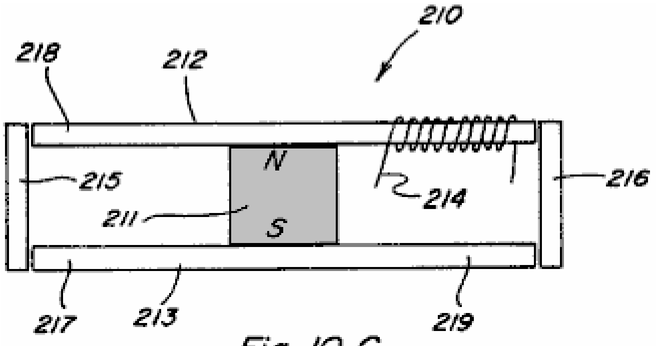

Fig. 10 G

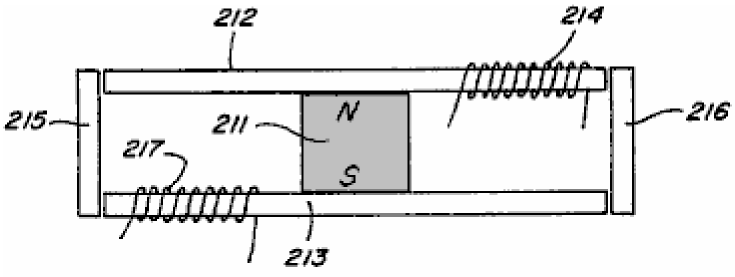

Fig. 10 H

Figs.10, **10A-10H** are perspective views of various embodiments of permanent magnet **5** control components which include two or more magnetic flux paths;

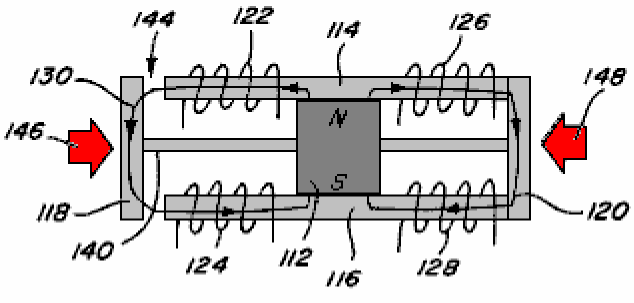

Fig. 11

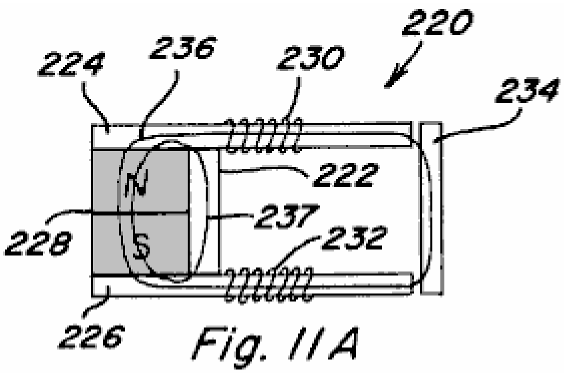

Fig. 11A

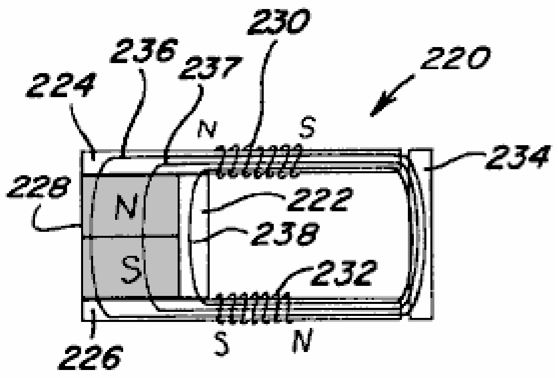

Fig. 11B

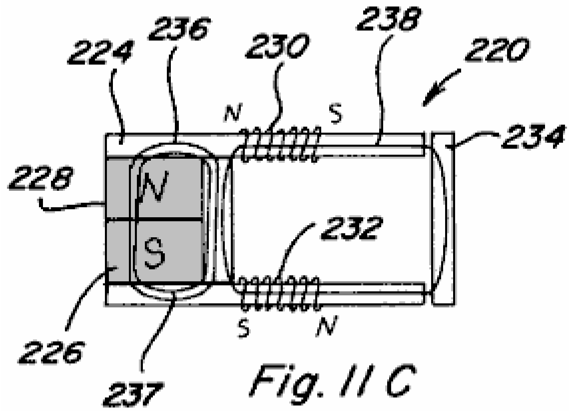

Fig. 11 C

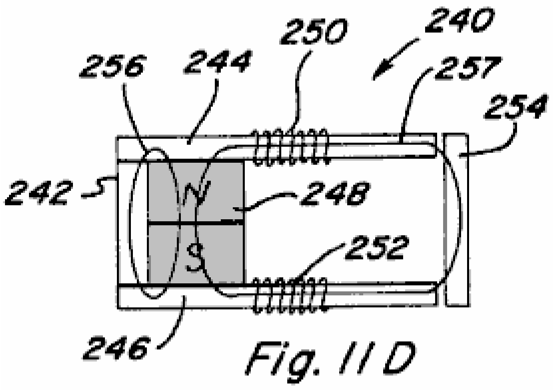

Fig. 11 D

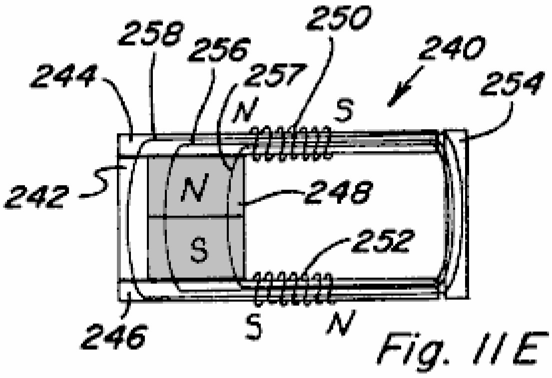

Fig. 11 E

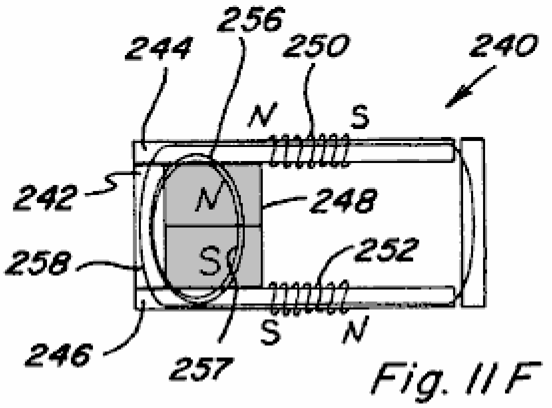

Fig. 11 F

Figs.11, **11A-11F** are side views of a permanent magnet device including a permanent magnet having pole pieces positioned against the pole faces thereof and including a movable armature and a permanent bypass extending between the pole pieces;

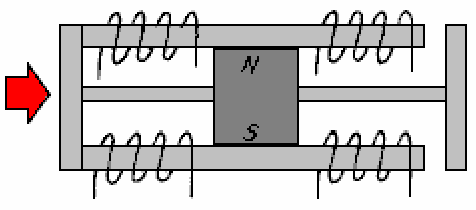

Fig. 12

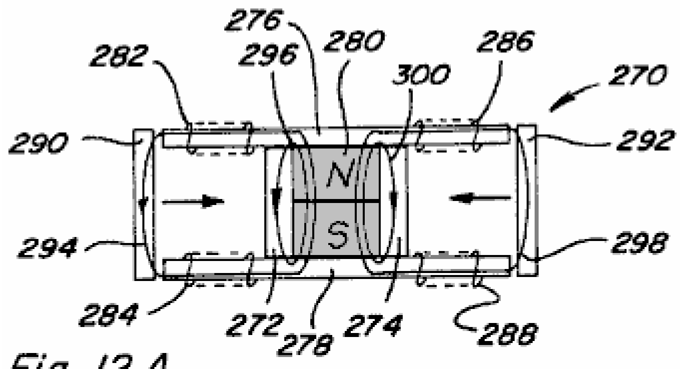

Fig. 12 A

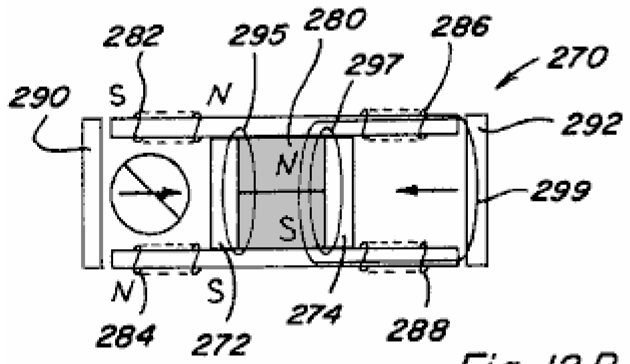

Fig. 12 B

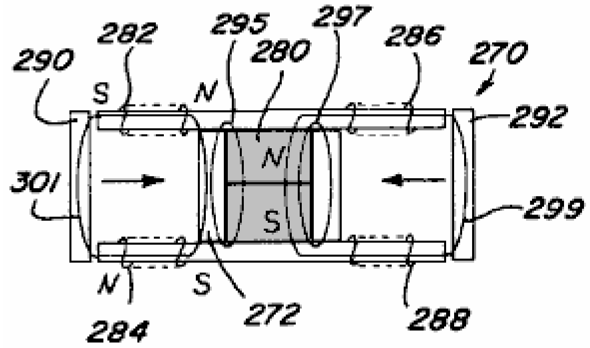

Fig. 12 C

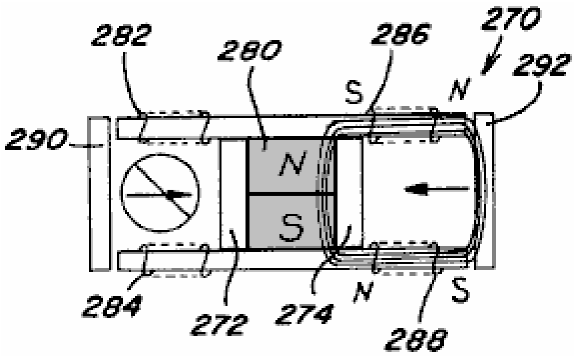

Fig. 12 D

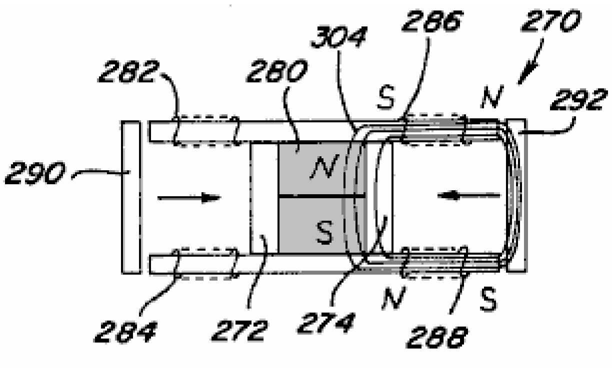

Fig. 12E

Figs.12, **12A-12E** are side views of a two path permanent magnet device including two bypasses;

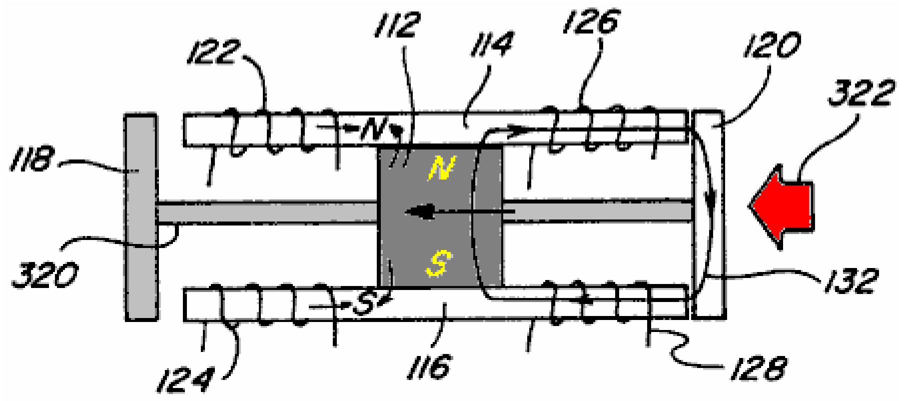

Fig. 13A

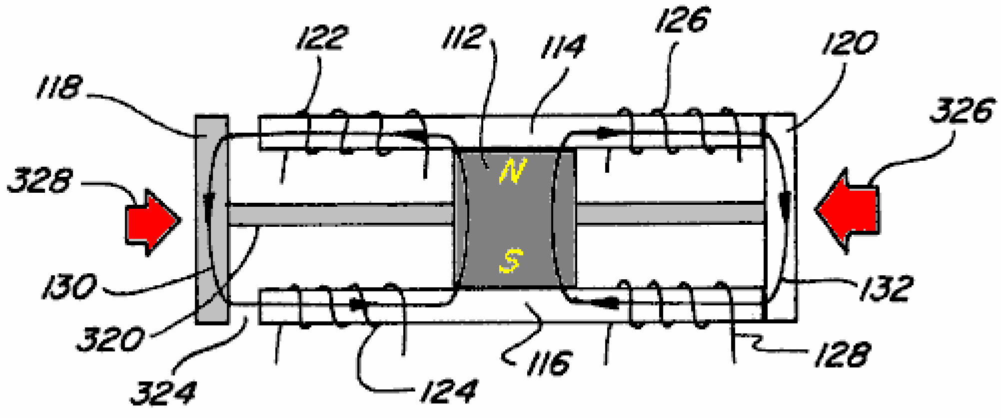

Fig. 13B

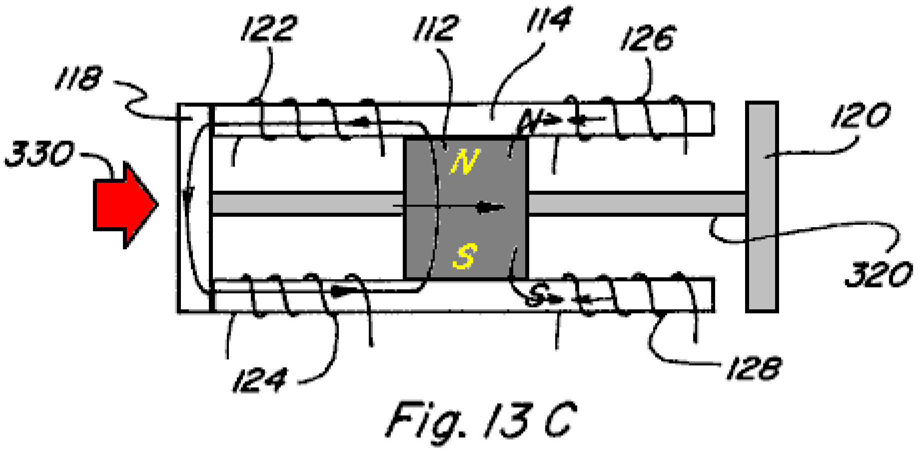

Figs.13A-13C are side views of a permanent magnet linear reciprocating device;

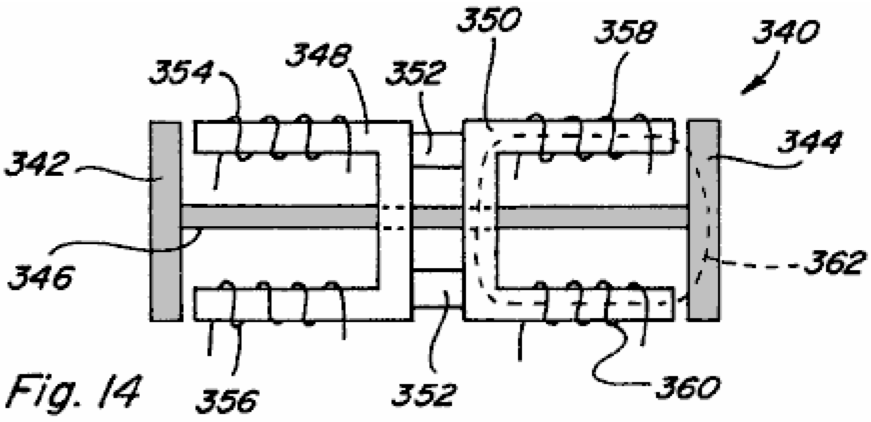

Fig.14 is a side view of an electromagnetic linear reciprocating device;

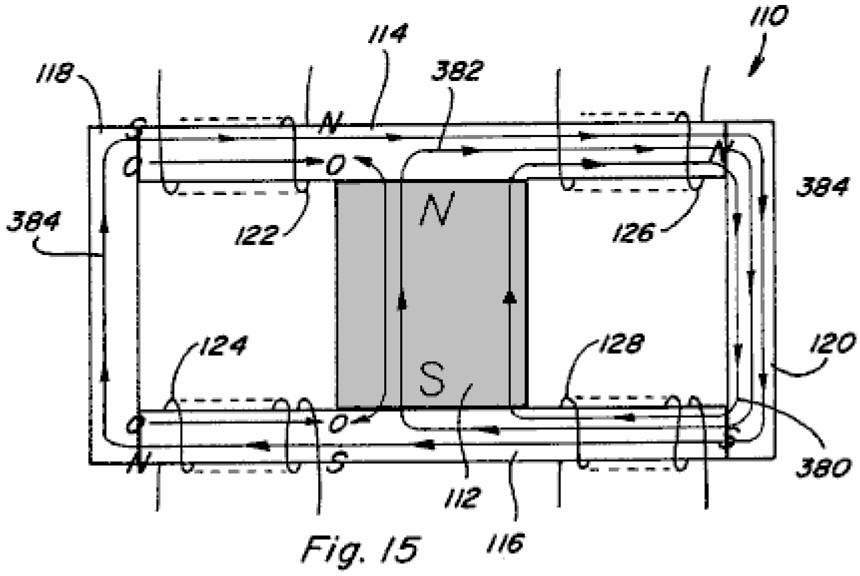

Fig.15 is a side view of a two path permanent magnet device showing control coils energised in an exceeding manner;

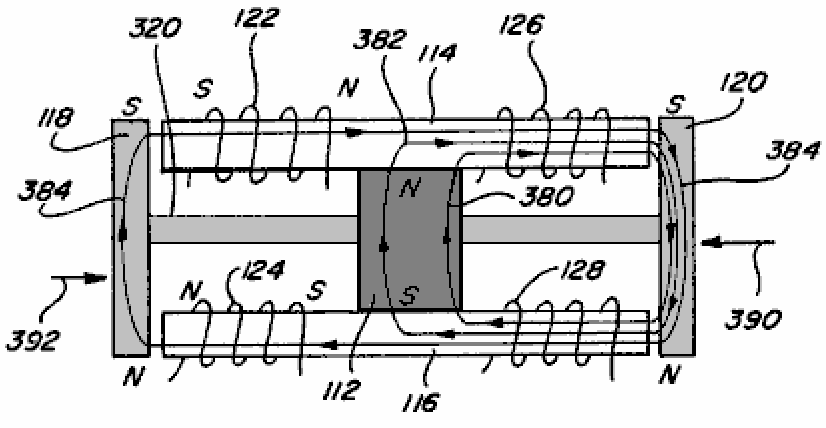

Fig. 16 A

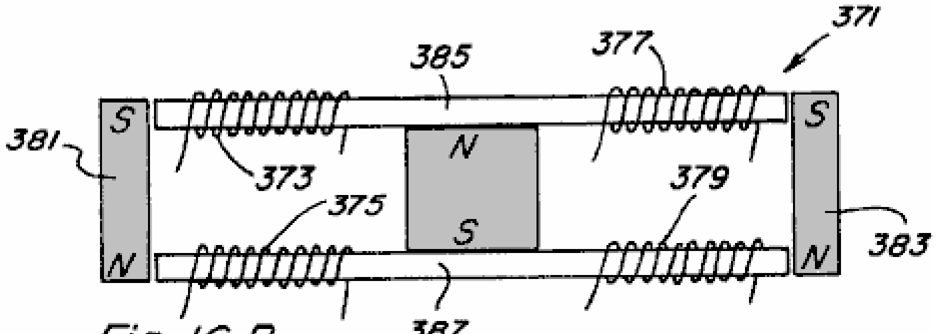

Fig. 16 B

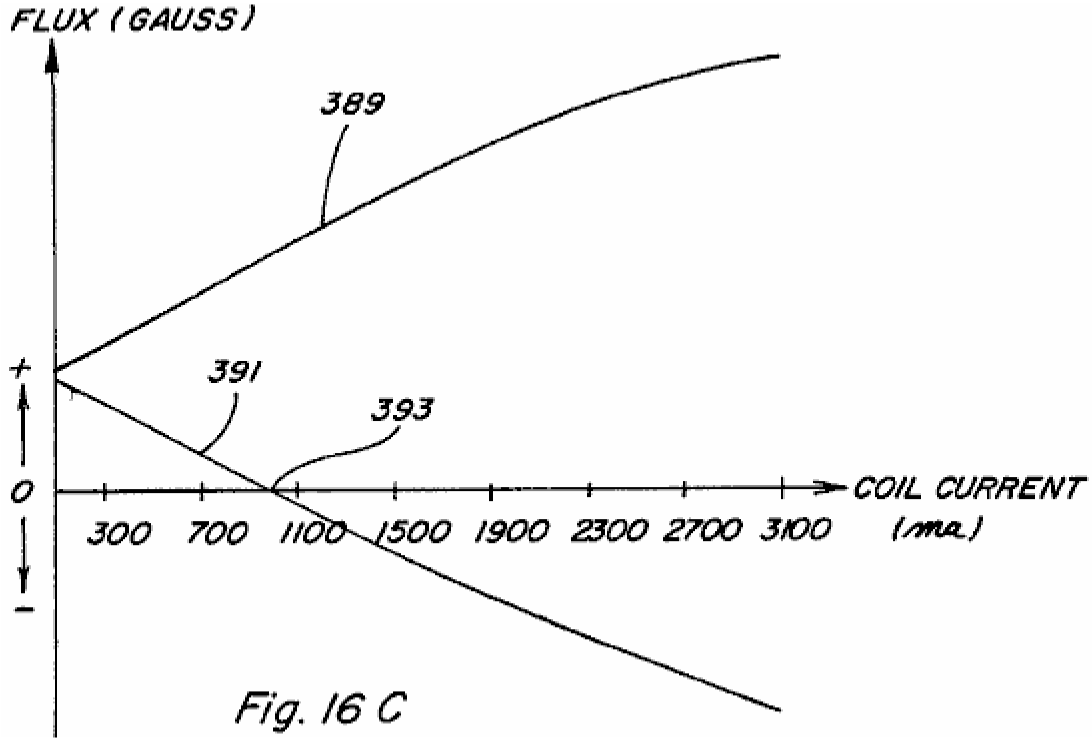

Fig. 16 C

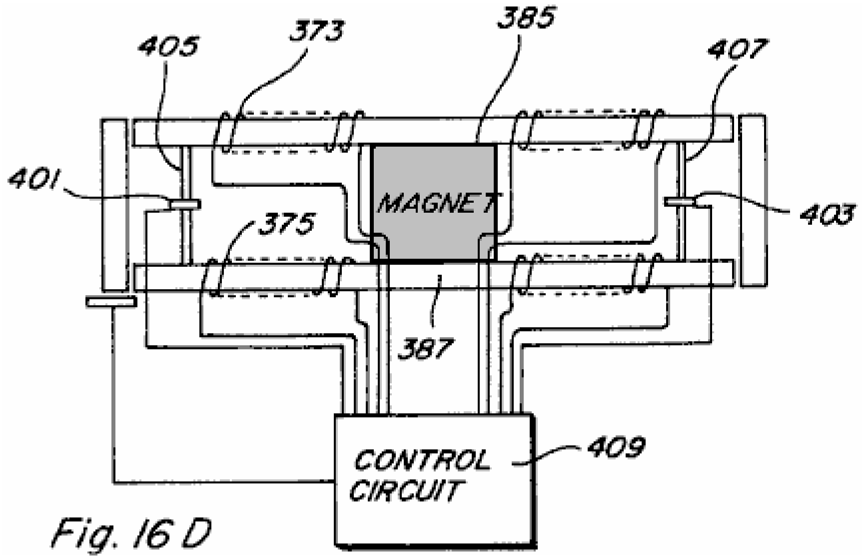

Fig. 16 D

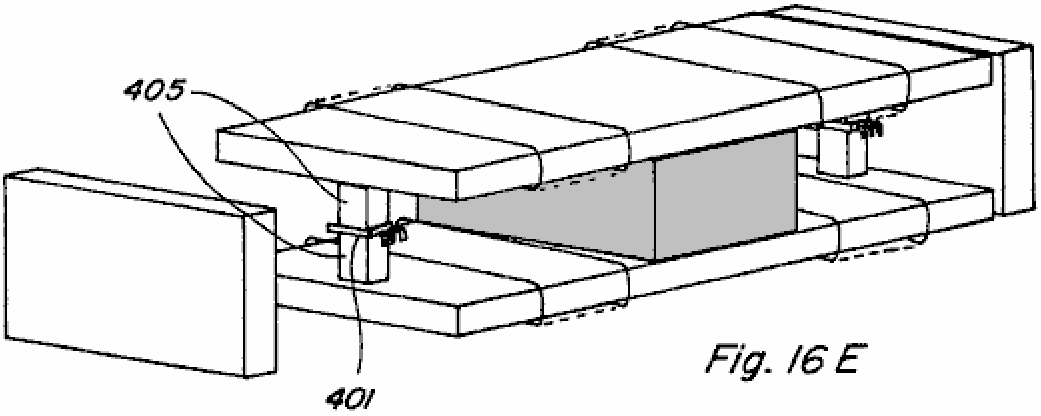

Fig. 16 E

Figs.16A-E are a side view of a linear reciprocating device with control coils energised in an exceeding manner;

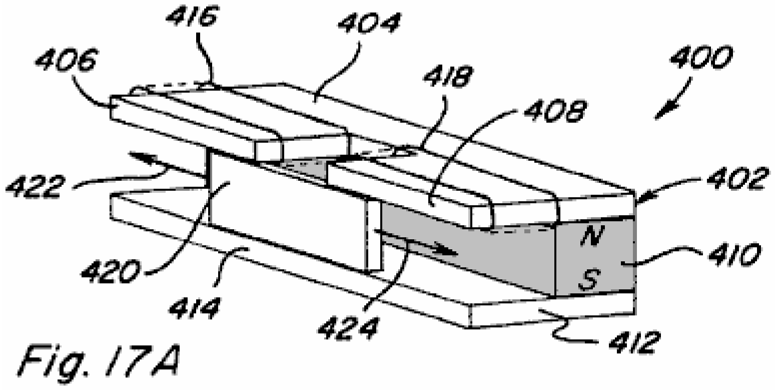

Fig. 17A

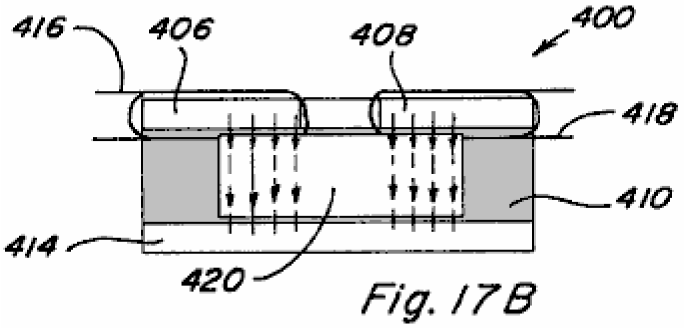

Fig. 17B

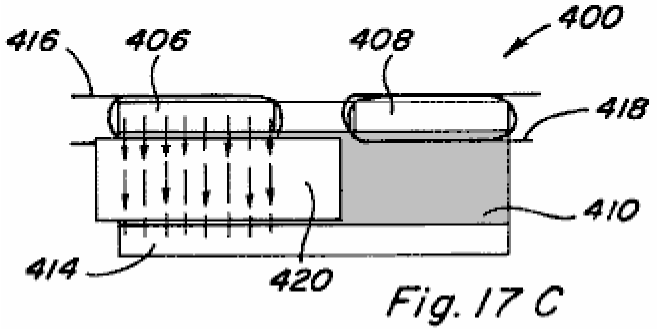

Fig. 17 C

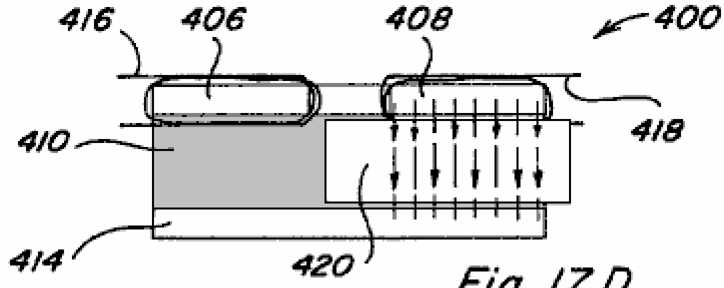

Fig. 17 D

Figs.17A-17D depict another embodiment of a linear reciprocating device;

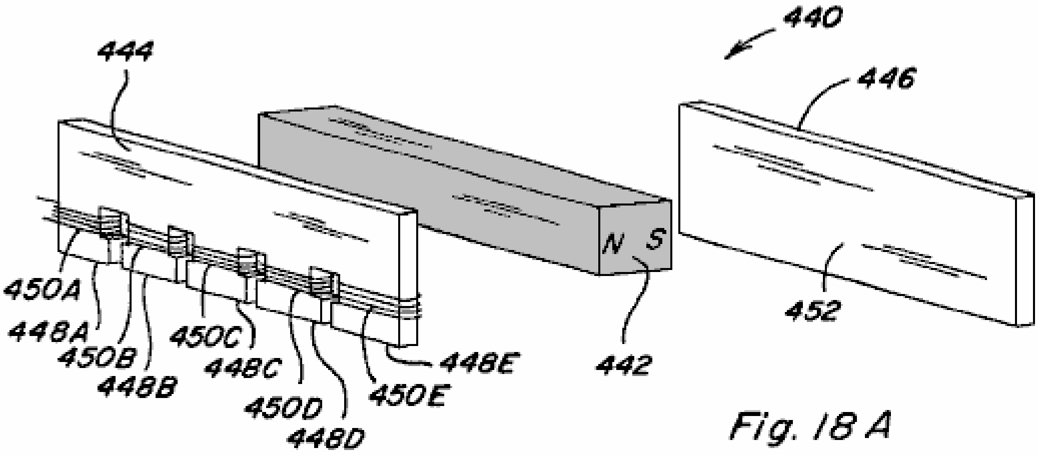

Fig. 18 A

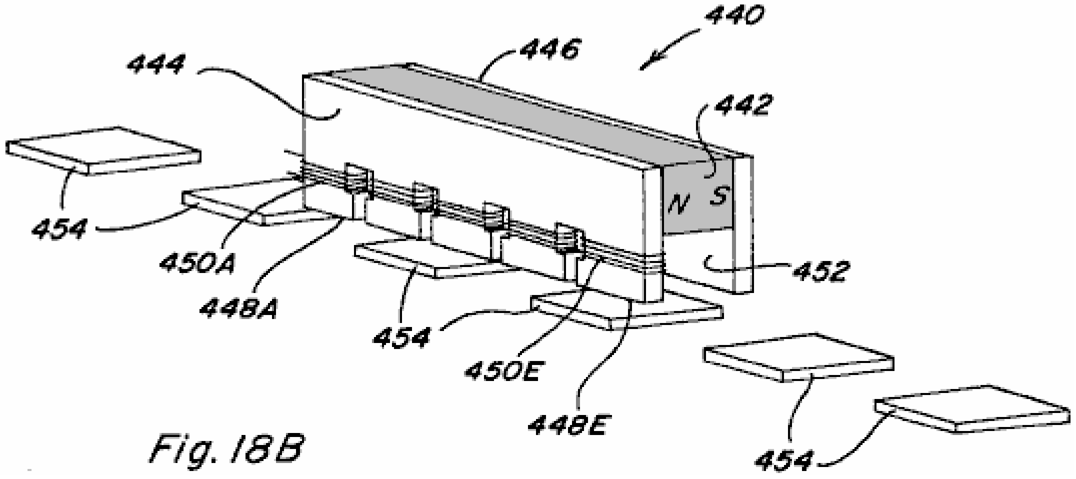

Fig. 18B

Fig. 18C

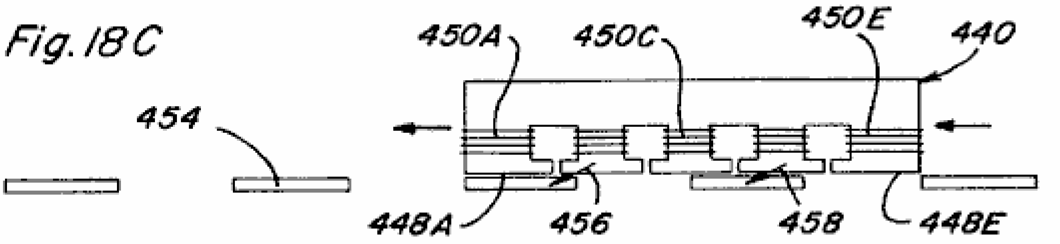

Fig. 18D

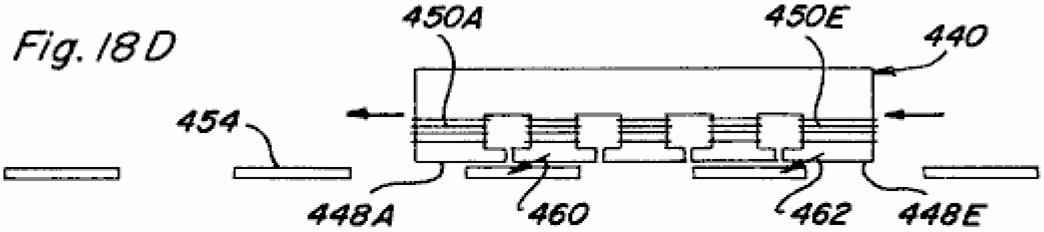

Fig. 18E

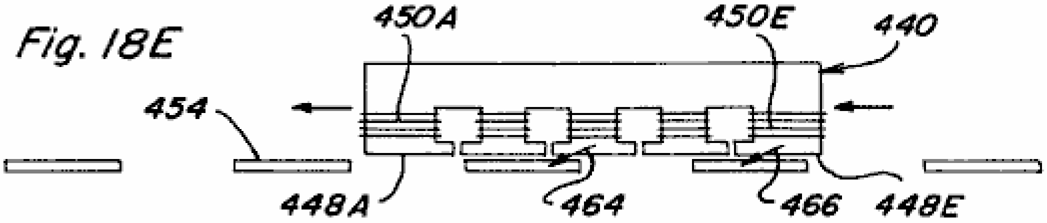

Figs.18A-18E show a linear motion device;

Fig. 19

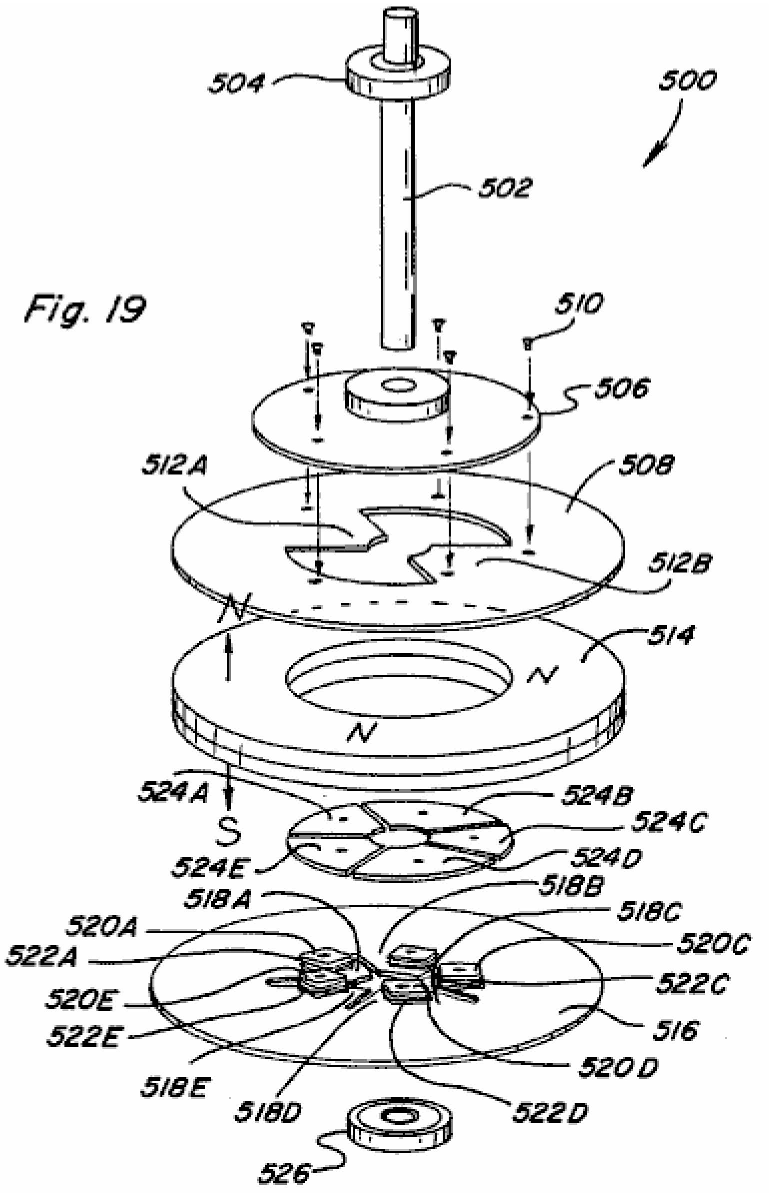

Fig.19 is an exploded perspective view of a rotary motion device;

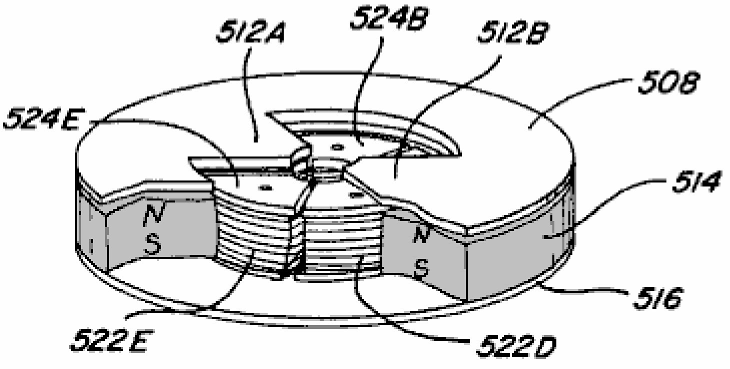

Fig. 20

Fig.20 is a partial assembled and cut away view of the rotary motion device of Fig.19;

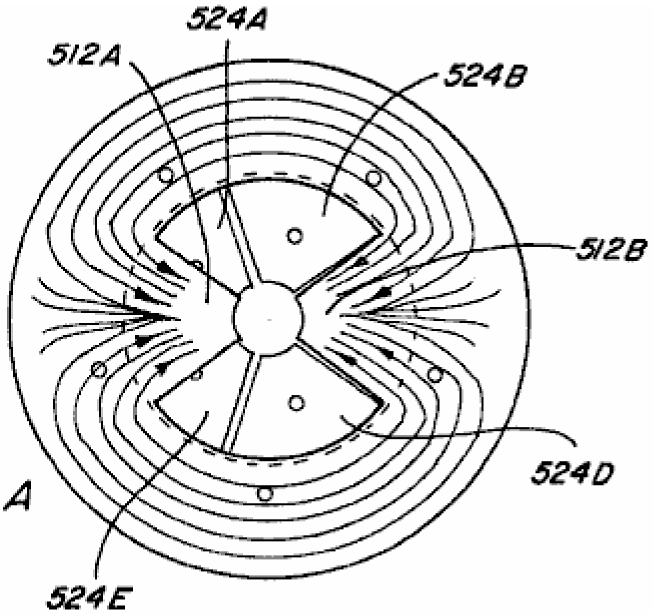

Fig. 21A

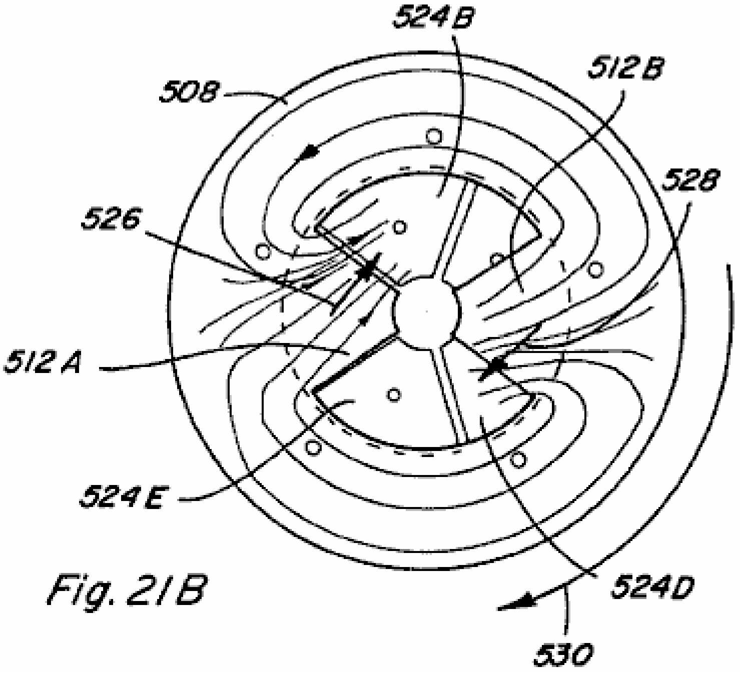

Fig. 21B

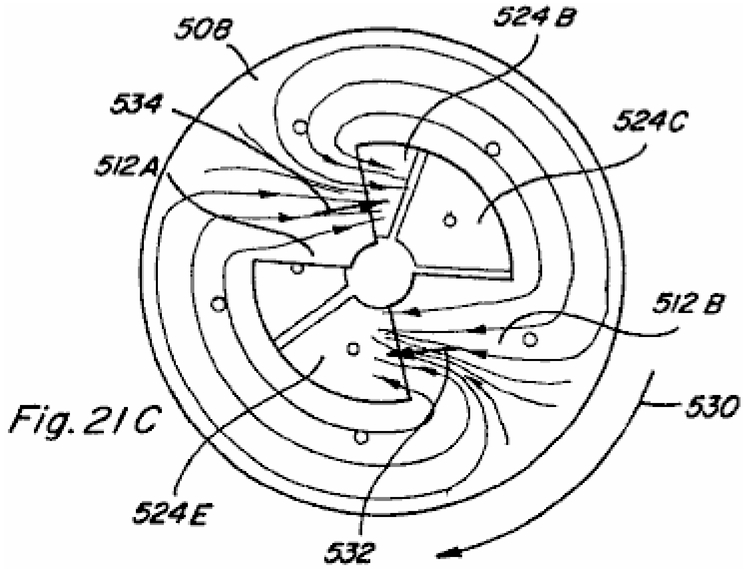

Fig. 21C

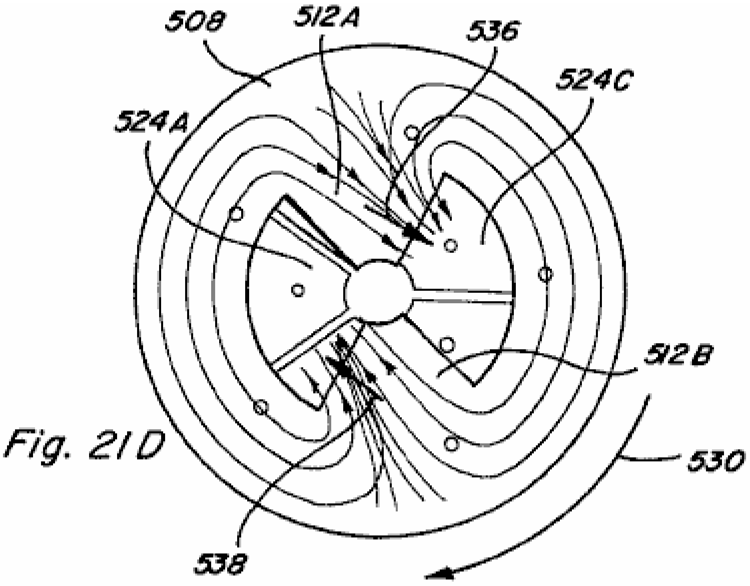

Fig. 21D

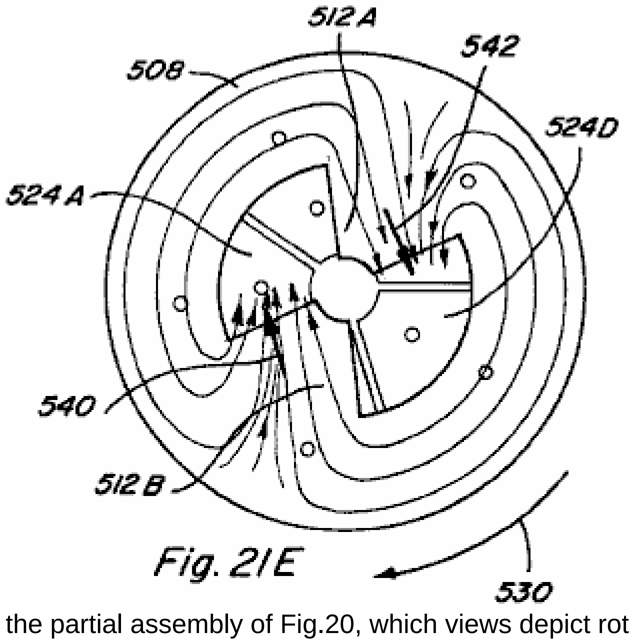

Fig. 21E

Figs.21A-21E are top views of the partial assembly of Fig.20, which views depict rotational motion thereof,

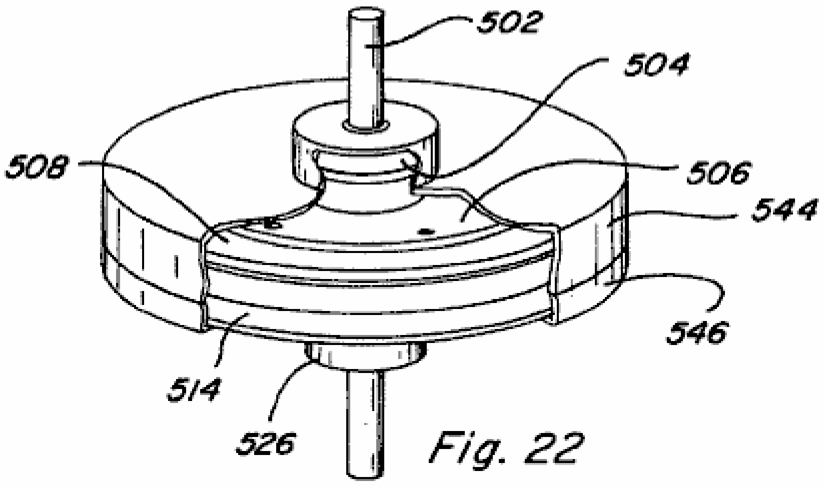

Fig.22 is an assembled, cut-away view of the rotary motion device of Fig.19 including a housing;

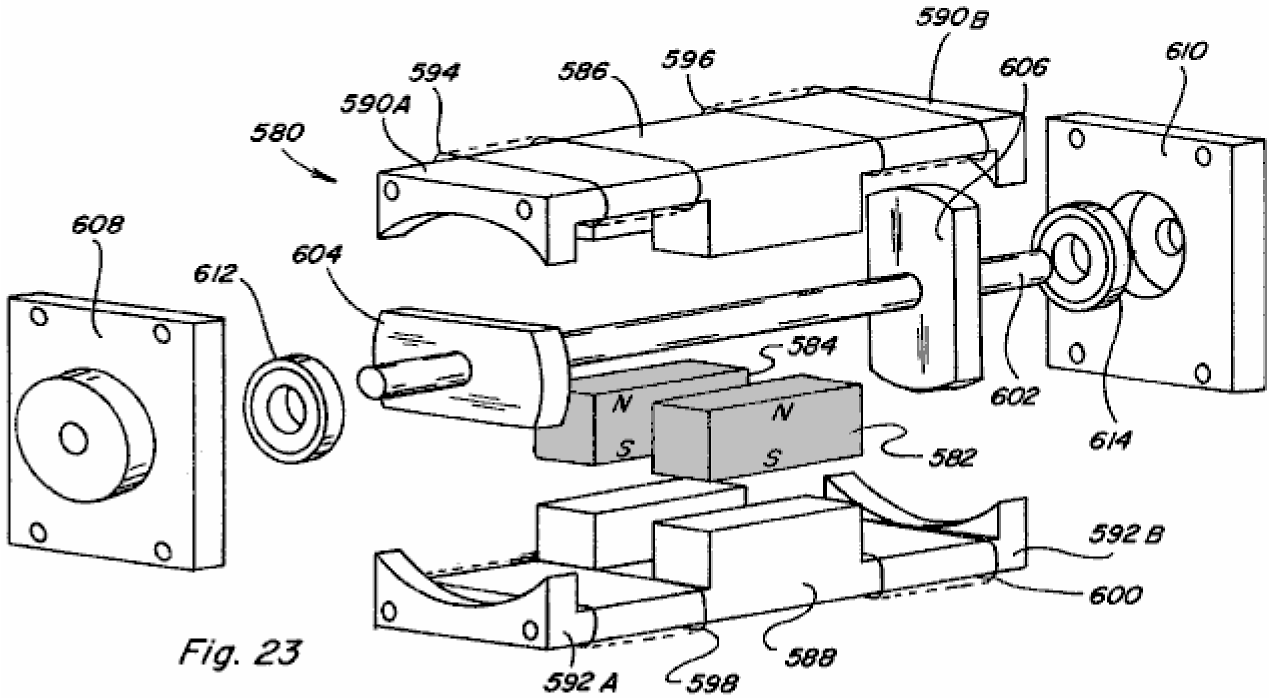

Fig.23 is an exploded perspective view of another embodiment of a rotary motion device;

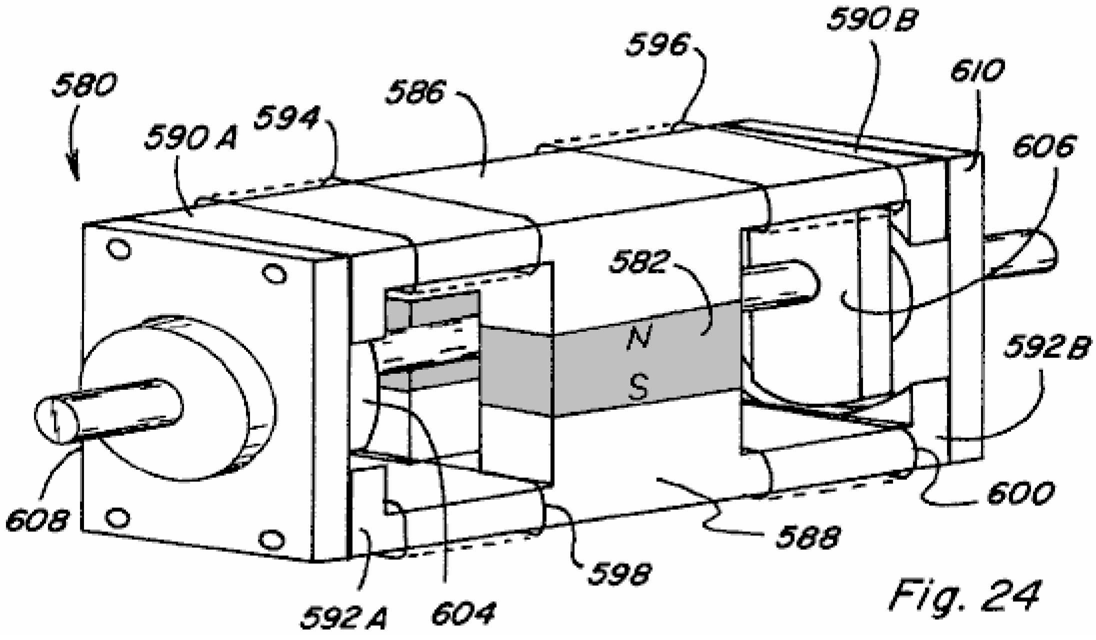

Fig. 24

Fig.24 is a perspective view of the rotary motion device of Fig.23 as assembled;

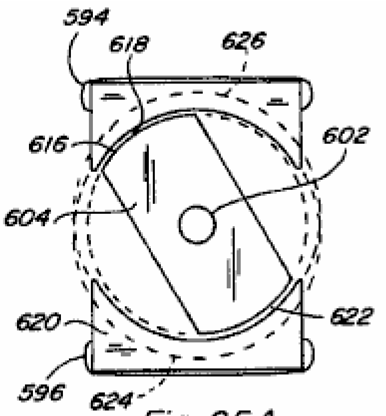

Fig. 25A

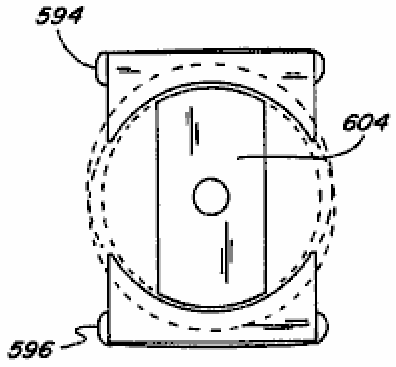

Fig. 25B

Figs.25A-25B are end views of the rotary motion device of Fig.24 with the end cap removed to expose the rotor member;

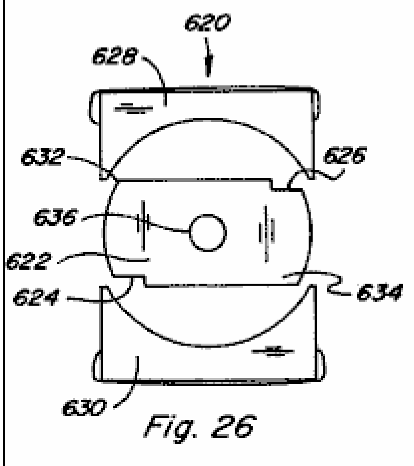

Fig. 26

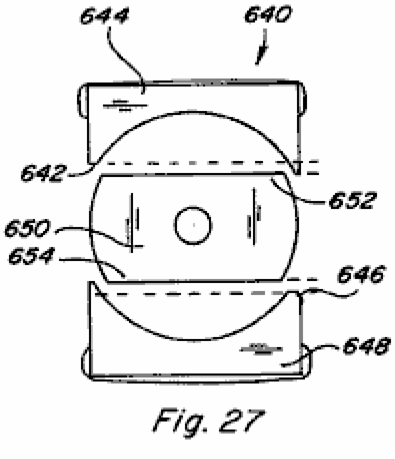

Fig. 27

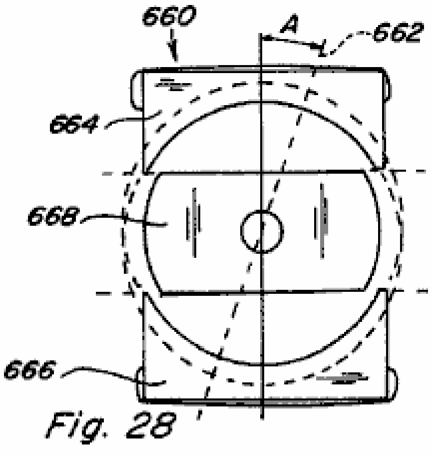

Fig. 28

Figs.26-28 show end views of various configurations for skewing the direction of rotation in the rotary motion device of Fig.24;

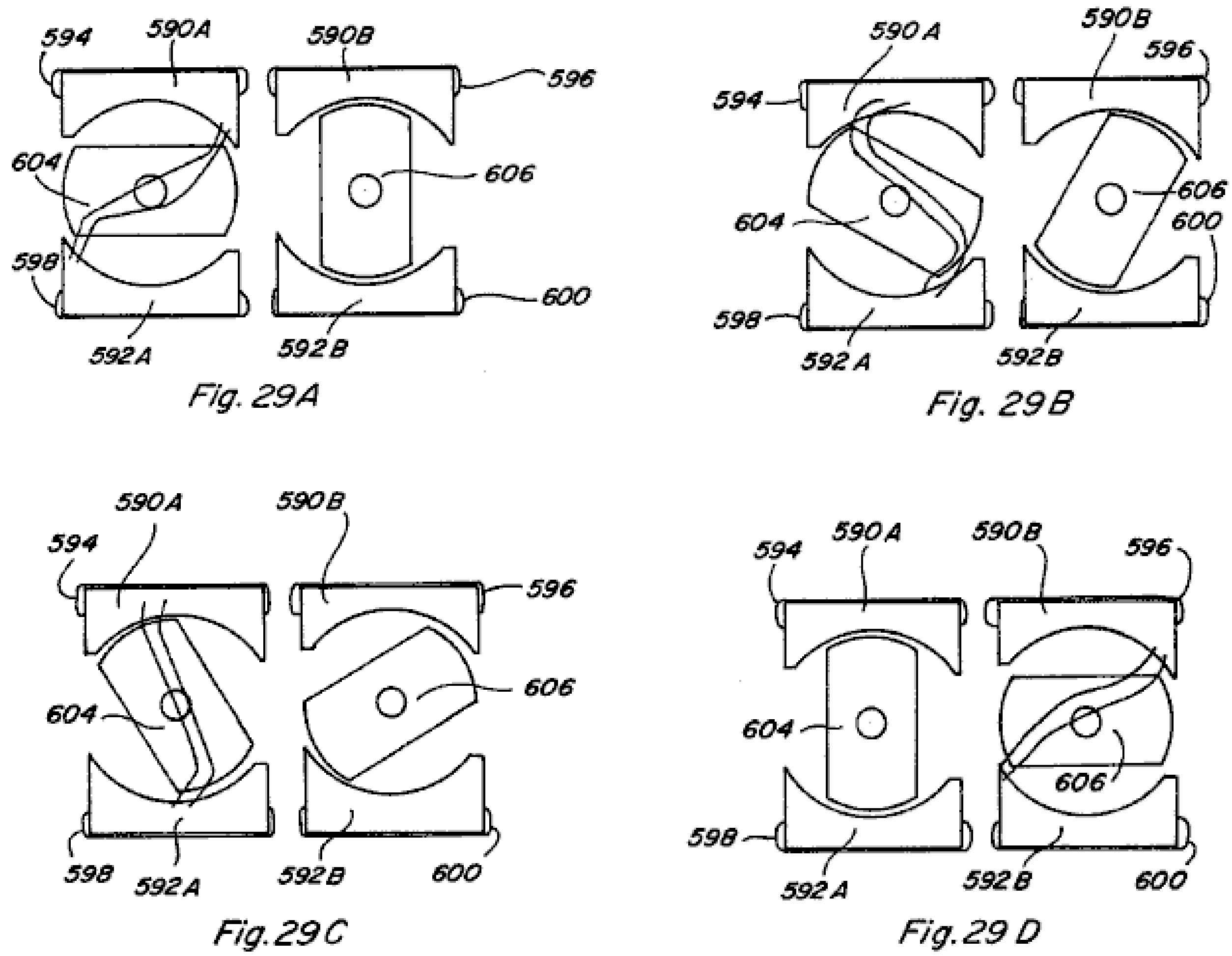

Fig. 29A

Fig. 29B

Fig. 29C

Fig. 29D

Figs.29A-29D are end views of the rotary motion device of Fig.24 illustrating a sequence of its rotational movements;

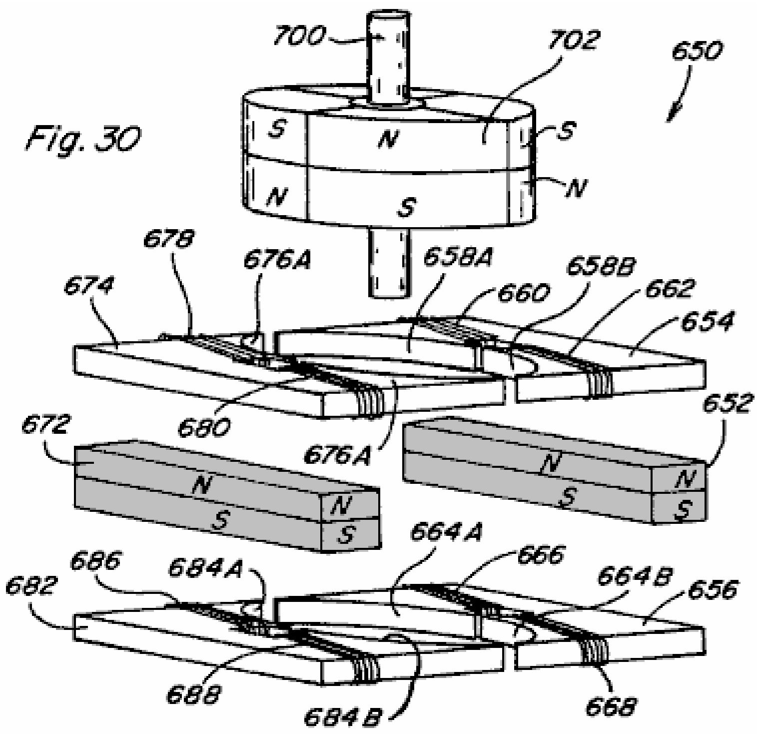

Fig. 30

Fig.30 is an exploded partial perspective view of another embodiment of a rotary motion device;

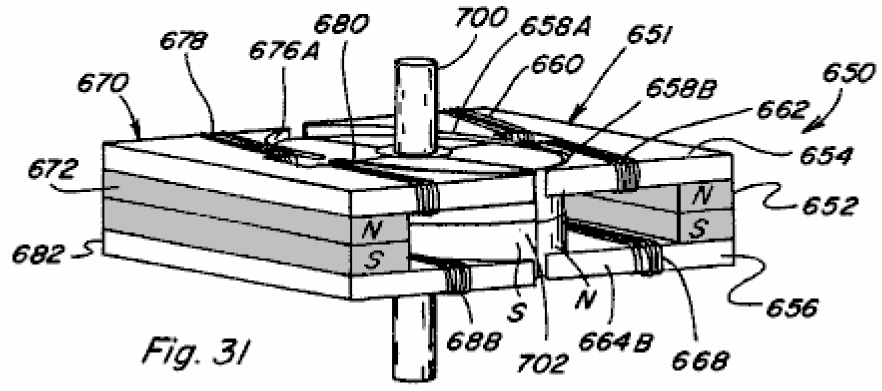

Fig. 31

Fig.31 is a perspective view of the rotary motion device of Fig.30 as assembled

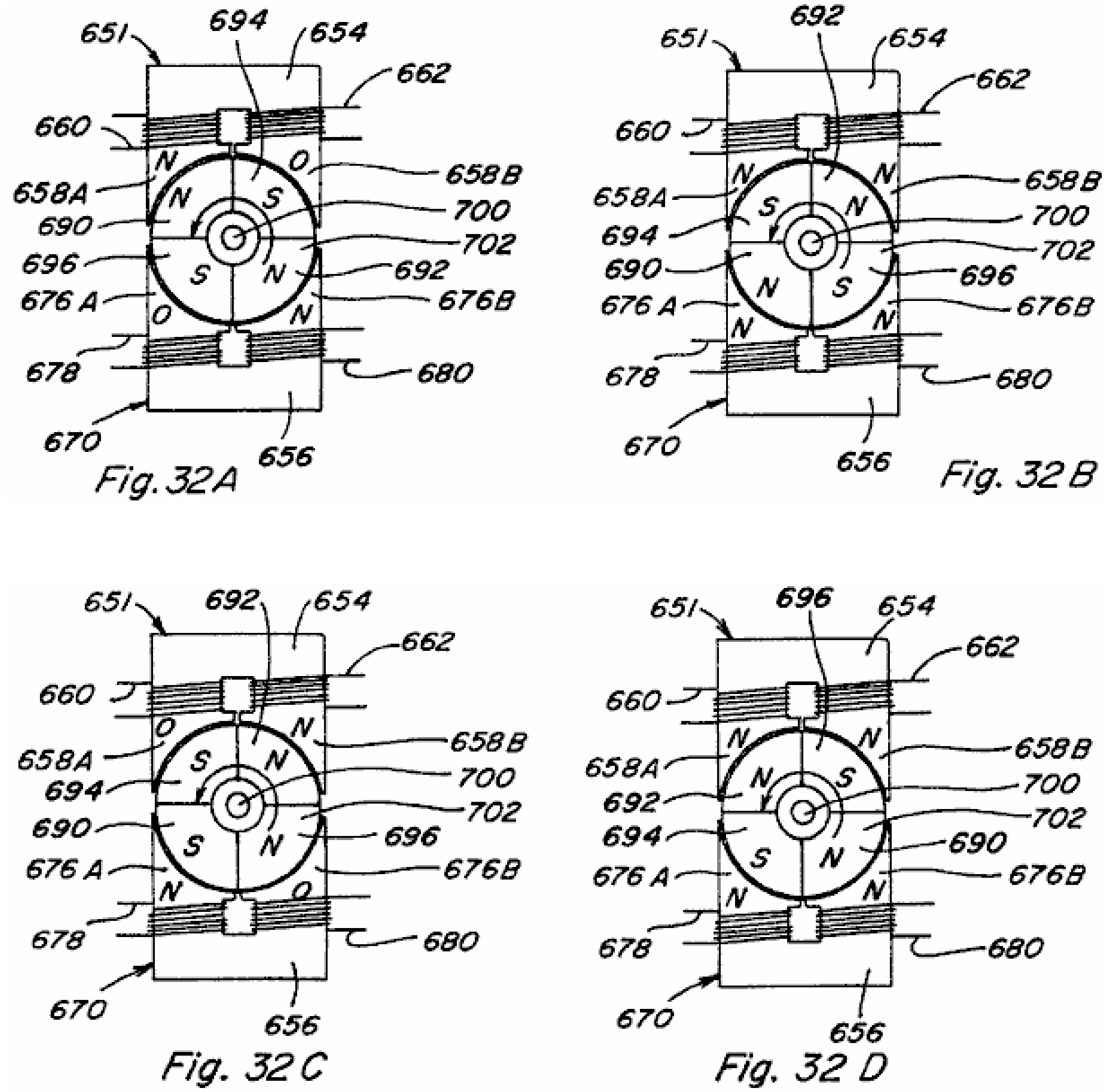

Fig. 32A

Fig. 32B

Fig. 32C

Fig. 32D

Figs.32A-32D are top views of the rotary motion device of Fig.31 illustrating it’s rotational movement;

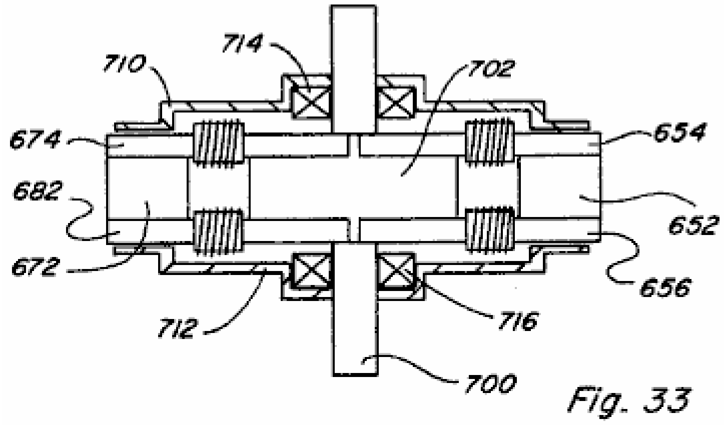

Fig. 33

Fig.33 is a side view of the rotary motion device of Fig.31 as assembled and including a housing;

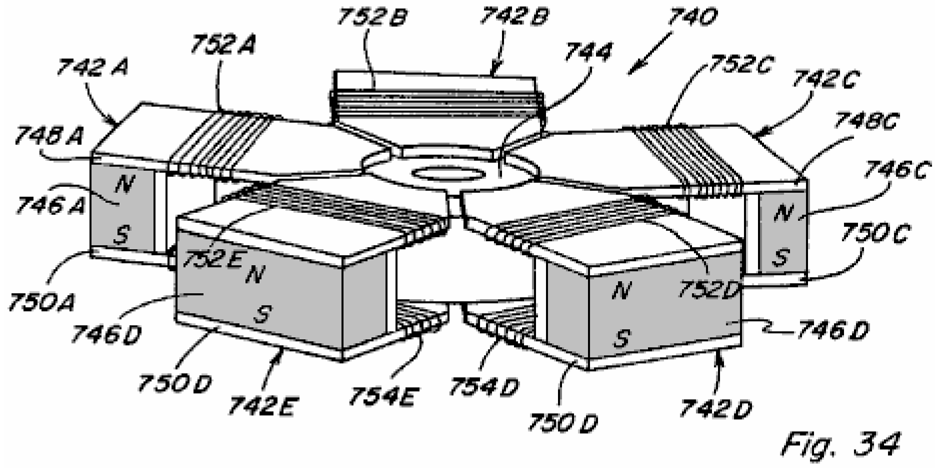

Fig. 34

Fig.34 is a perspective view of another embodiment of a rotary motion device;

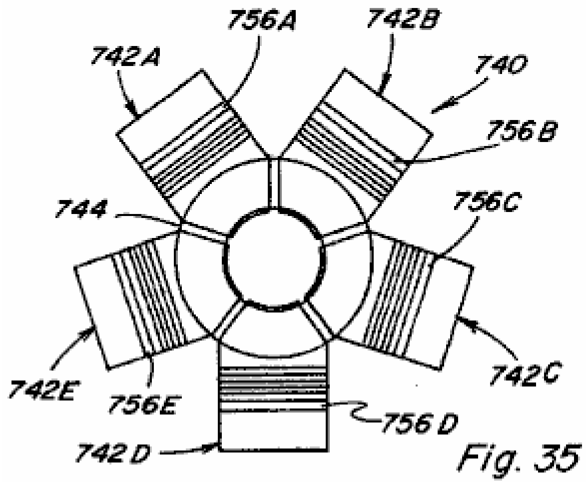

Fig. 35

Fig.35 is a top view of the rotary motion device of Fig.34;

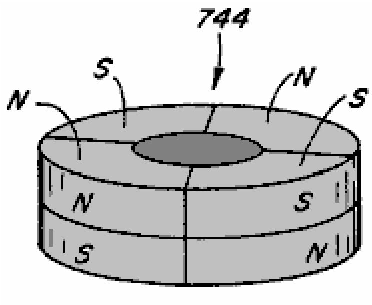

Fig. 36

Fig.36 is a perspective view of the permanent magnet rotor member of the rotary motion device of Fig.34;

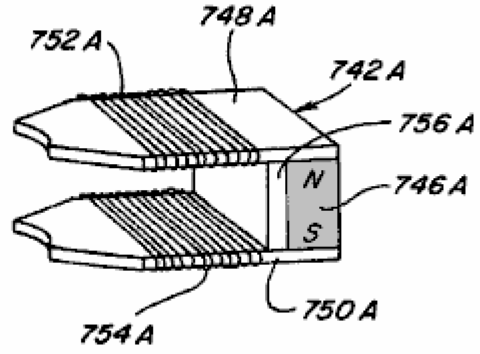

Fig. 37

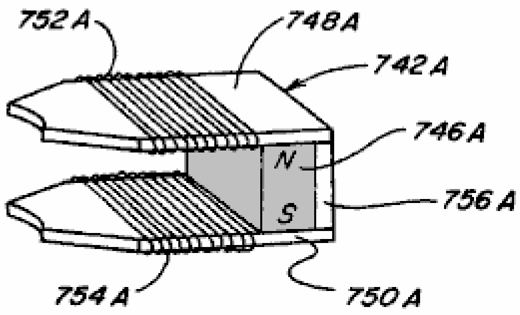

Fig. 38

Fig.37 and **Fig.38** show alternative configurations for the control component incorporated into the rotary motion device of Fig.34;

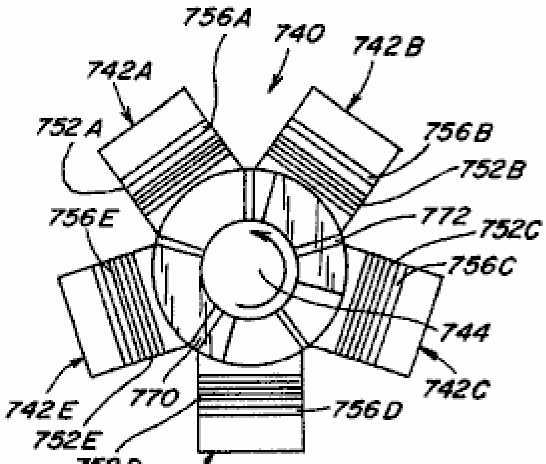

Fig. 39A

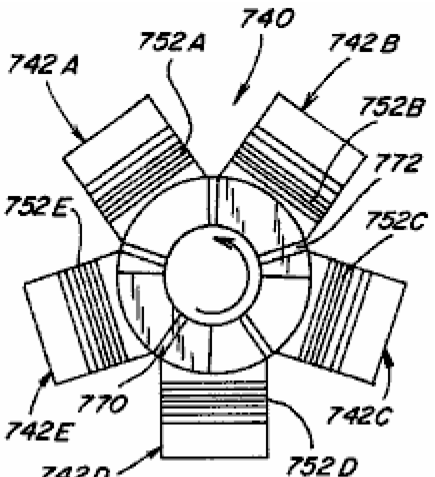

Fig. 39B

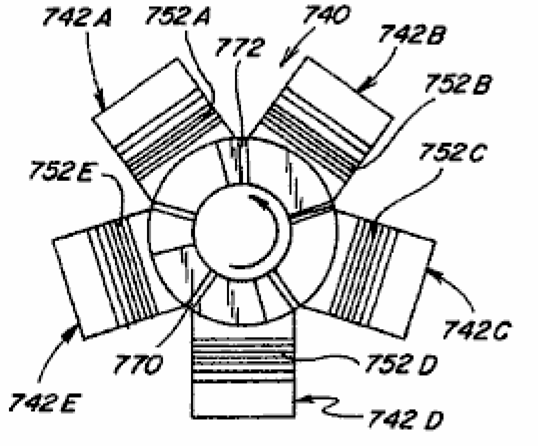

Fig. 39 C

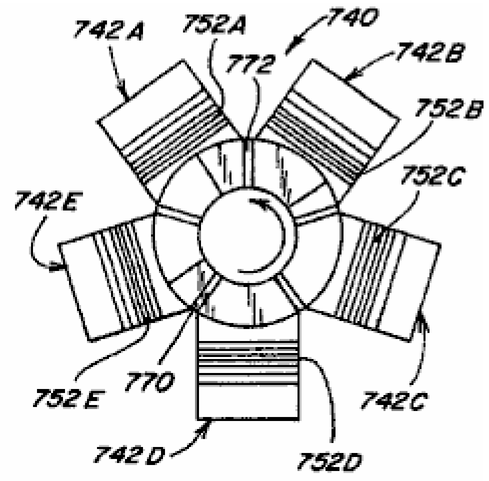

Fig. 39 D

Figs.39A-39D are top views of the rotary motion device of Fig.34 and depict its rotational movement;

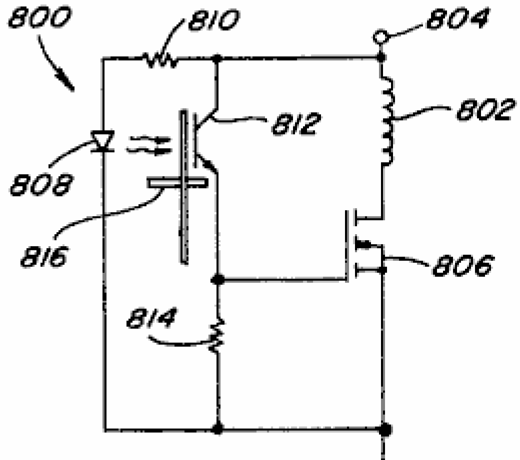

Fig. 40

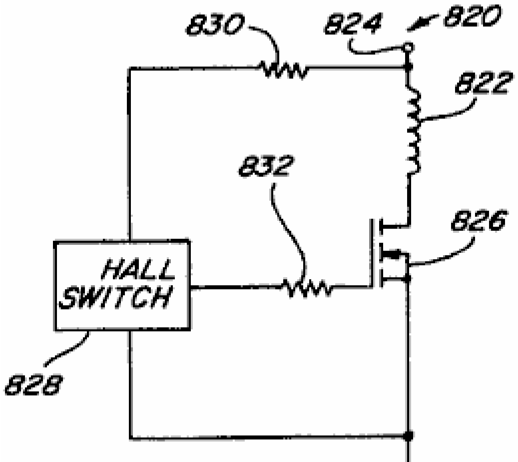

Fig. 41

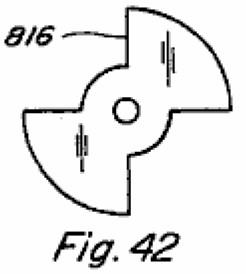

Fig. 42

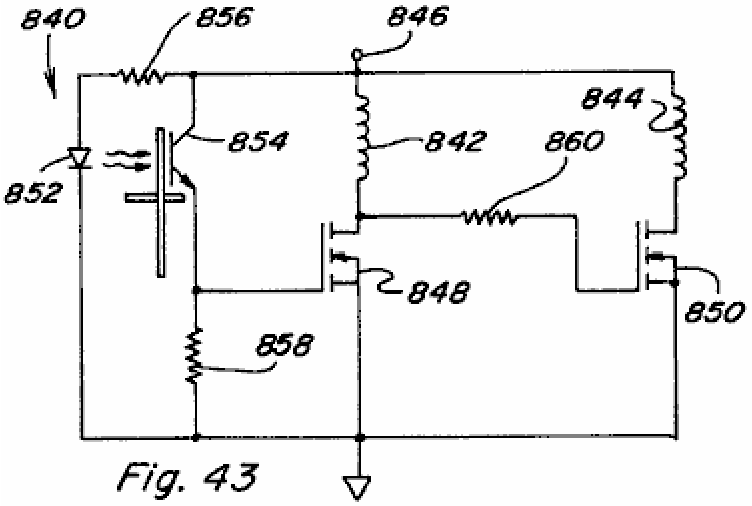

Fig. 43

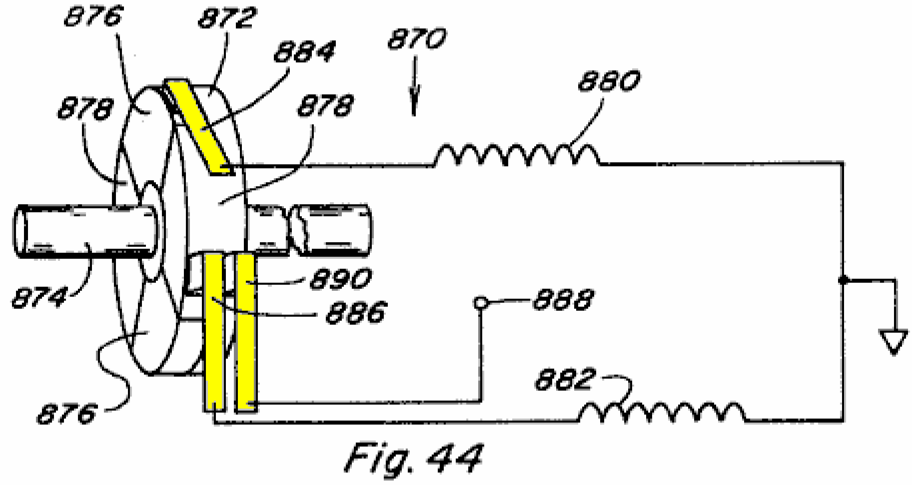

Fig. 44

Figs.40-44 are alternative variations of the circuit for controlling the timed energisation of control coils in the various devices of the present invention;

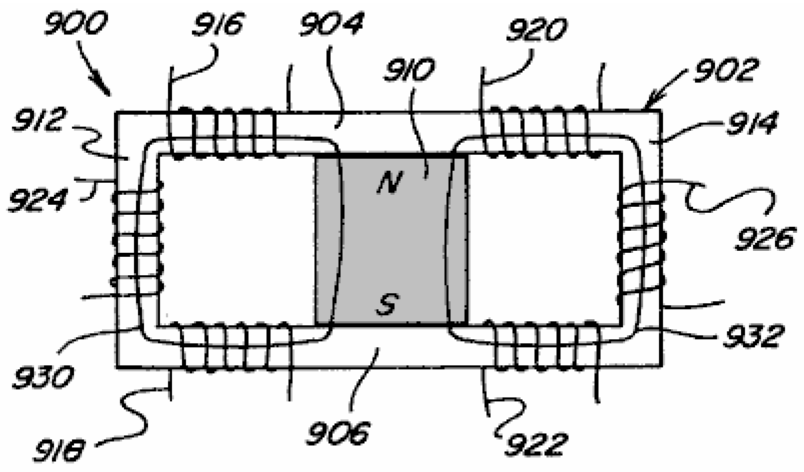

Fig. 45A

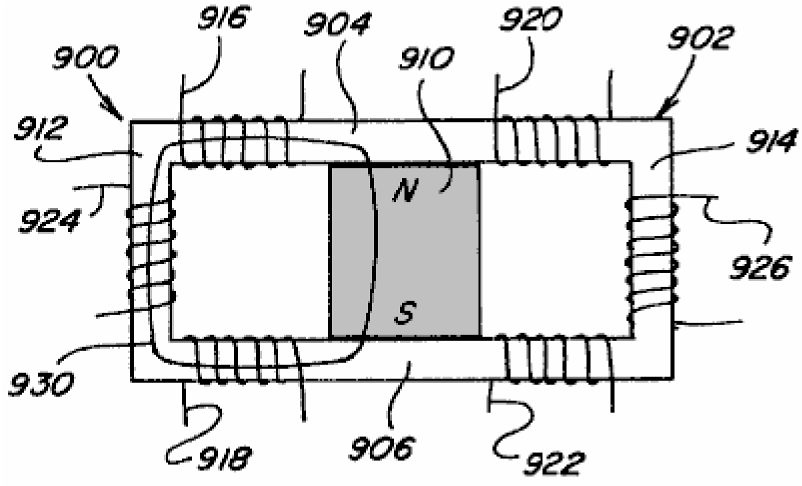

Fig. 45B

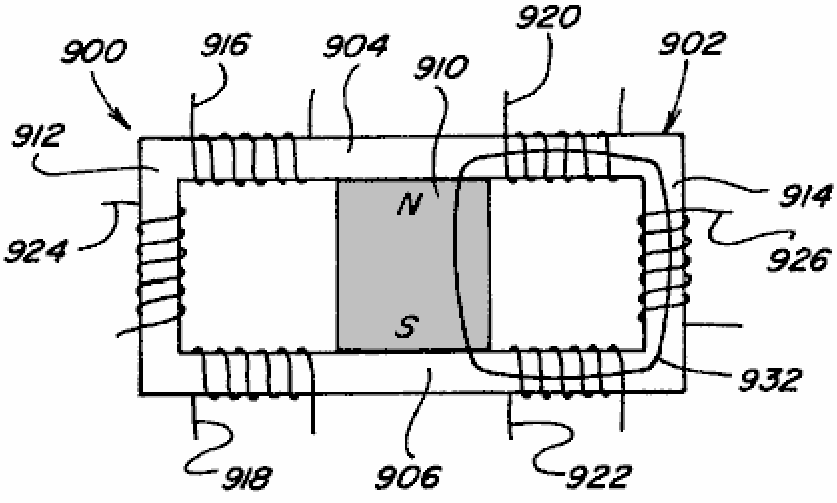

Fig. 45C

Figs.45A-45C and **Figs.45X-45Z** are side views of two path power conversion devices;

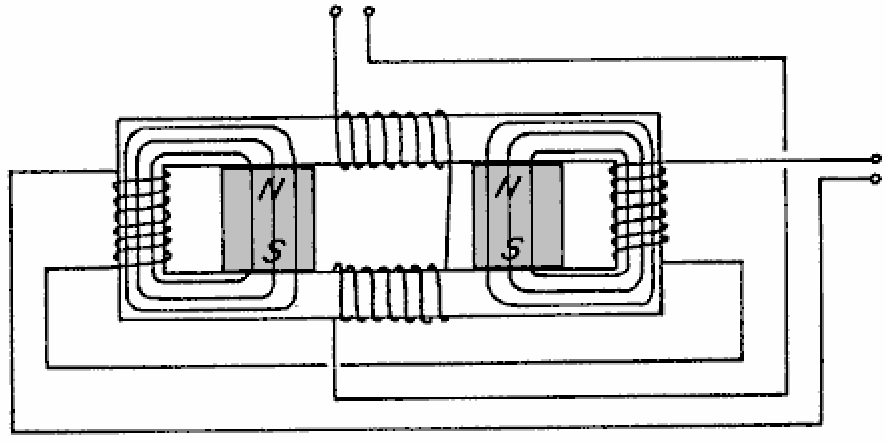

Fig. 45 X

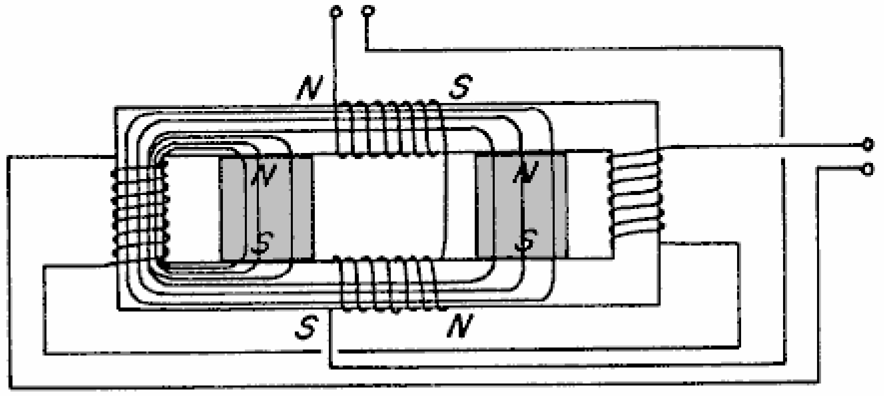

Fig. 45 Y

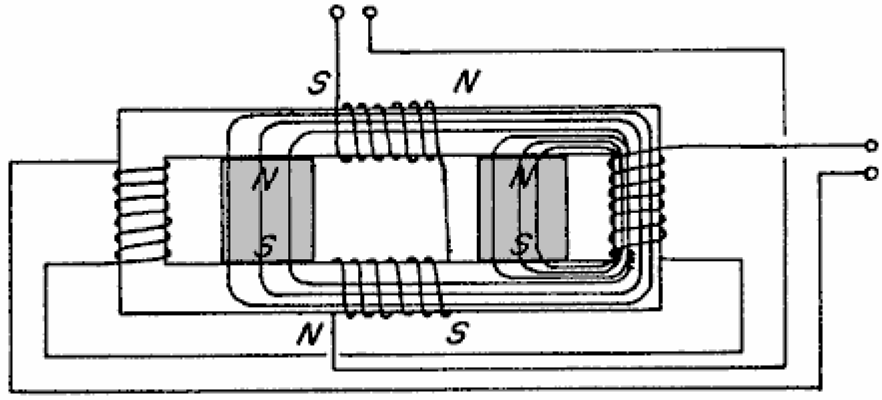

Fig. 45 Z

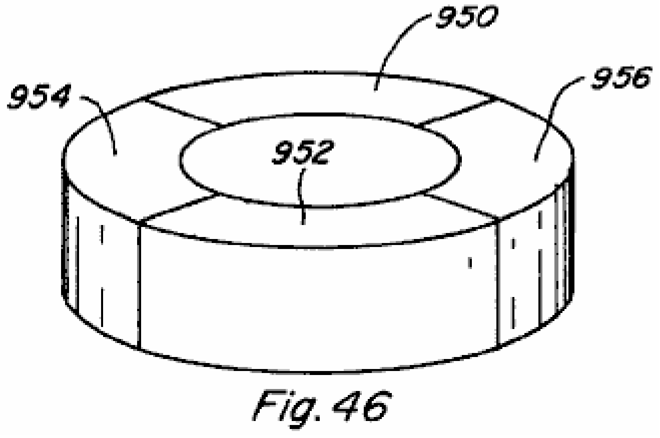

Fig.46 is a schematic view of the permanent magnet portion of a rotor for use in some embodiments of the present device;

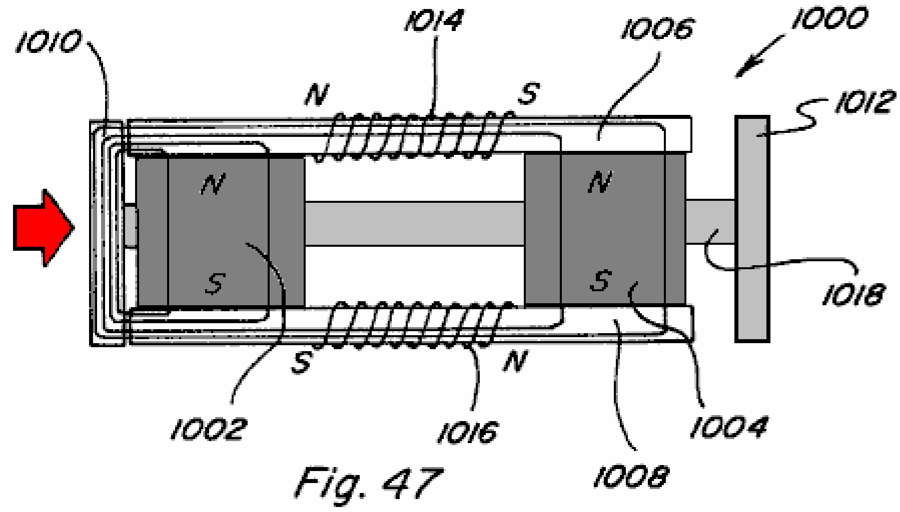

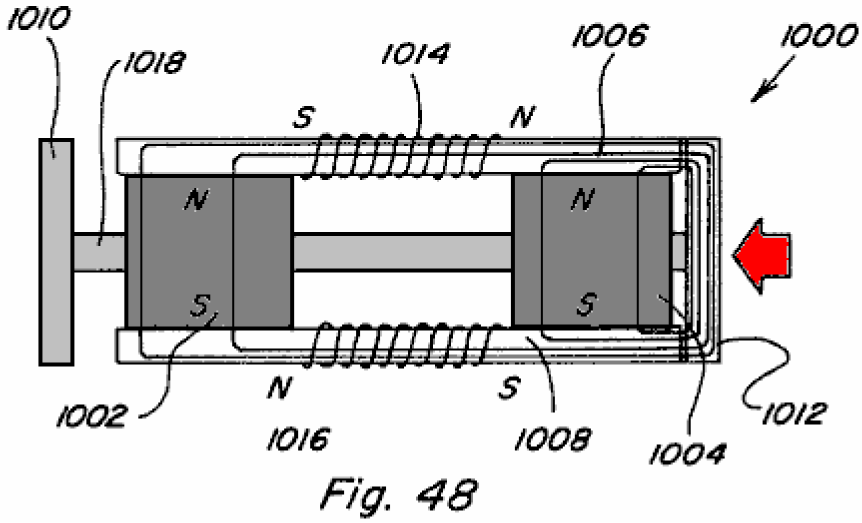

Fig.47 and **Fig.48** show other embodiments of a linear motion device;

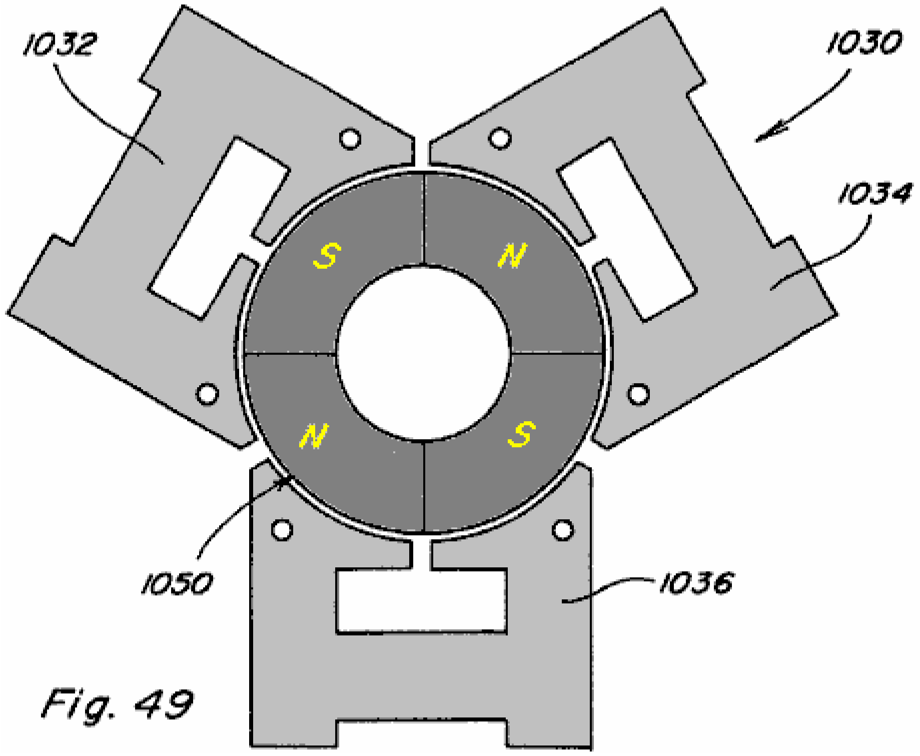

Fig.49 is a top view of another embodiment of a rotating motor like construction; and

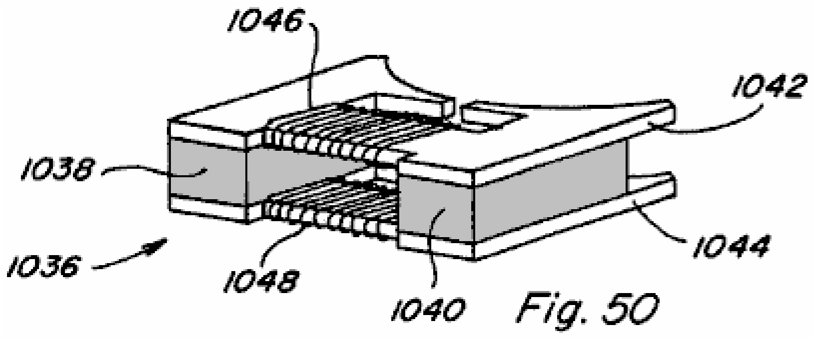

Fig.50 is a schematic view of one of the three stator portions of the device shown in **Fig.49**.

DETAILED DESCRIPTION OF THE DRAWINGS

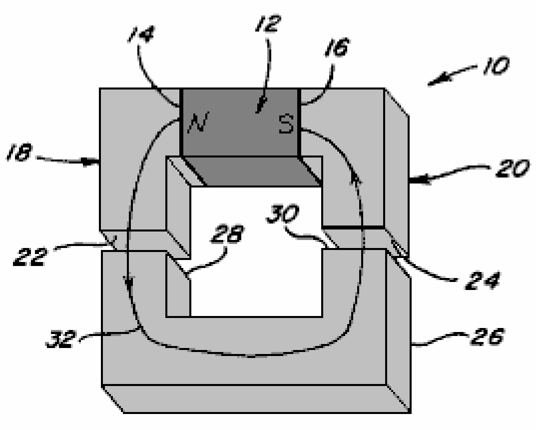

Fig. 1

Referring now to the drawings, Figs.1-4 are provided to facilitate an understanding of various aspects or features of the technology utilised in the present invention. **Fig.1** depicts a device **10** having a magnetic flux producing member **12** which may be a permanent magnet or electromagnet with magnetic poles **14** and **16** as shown. Pole pieces **18** and **20** are positioned adjacent respective poles **14** and **16** to provide a path for the magnetic flux of member **12**. Each pole piece **18** and **20** has a pole piece end face **22** and **24**. As used throughout this specification, it is understood that a pole piece, regardless of its shape or size, is preferably formed of soft iron, steel or some other magnetic material, with the preferred material being one which provides low reluctance, exhibits low hysterisis, and has a high magnetic flux density capability. Accordingly, the various pole pieces disclosed and described herein could likewise be of laminate type construction.

Referring again to **Fig.1** an armature **26**, also formed of magnetic material, is shown with end faces **28** and **30** which are positioned and sized for being placed adjacent pole piece end faces **22** and **24**, such that when so positioned a substantially continuous low reluctance path **32** is provided for magnetic flux from north pole **14**, through pole piece **18**, through armature **26**, through pole piece **16**, and to south pole **16**. The magnetic flux travelling along such path **32** results in a force which tends to hold armature **26** in position aligned with pole piece end faces **22** and **24**. The resulting magnetic coupling or holding force F provided between adjacent pole piece end face **22** and armature end face **28**, and between adjacent pole piece end face **24** and armature end face **30**, can be approximated by the following equation:

$$F=B^2A/2\mu_0,$$

where **B** is the magnetic flux density passing through the adjacent end faces and **A** is the surface area of the adjacent end faces. Assuming that if **B** is uniform throughout flux path **32** and that the area **A** of all end faces **22**, **24**, **28**, and **30** is the same, then the total holding force $\mathbf{F_{T26}}$ of armature **26** against pole pieces **18** and **20** will be:

$$F_{T26}=B^2A/\mu_0.$$

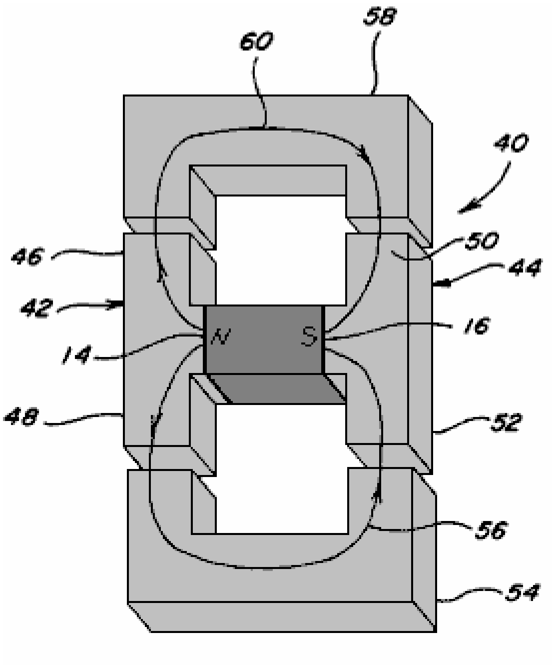

Fig. 2

In **Fig.2** a device **40** having the same magnetic flux producing member **12** with magnetic poles **14** and **16** is shown. Pole pieces **42** and **44** are positioned adjacent respective pole faces **14** and **16** to provide two paths, as opposed to one above, for the magnetic flux of member **12**. In particular, pole piece **42** includes a first path portion **46** extending beyond a perimeter of north pole face **14** in one direction and a second path portion **48** extending beyond the perimeter of north pole face **14** in another direction. Similarly, pole piece **44** includes a first path portion **50** extending beyond the perimeter of south pole face **16** in one direction and a second path portion **52** extending beyond the perimeter of south pole face **16** in another direction. Each pole piece path portion **46**, **48**, **50**, **52** includes a respective end face. A first armature **54** which can be positioned adjacent to the end faces of pole piece path components **48** and **52** provides a first magnetic flux path **56** and a second armature **58** is which can be positioned adjacent the end faces of pole piece path components **46** and **50** provides a second magnetic flux path **60**. If the flux carrying area along flux paths **56** and **60** is the same as the flux carrying area along flux path **32** of **Fig.1**, the magnetic flux density along each flux path **56** and **60** will be one-half the magnetic flux density along flux path **32** of **Fig.1** because the same amount of flux is split between two like paths. The effect of dividing a given amount of magnetic flux along two like flux paths instead of it passing along just one flux path can be seen by examining the holding force on armature **54** as compared to the holding force on armature **26** of **Fig.1**. As already noted the magnetic flux density along path **56** will be one-half that along flux path **32** and thus the total holding force F_{T54} can be determined as:

$$F_{T54}=(B/2)2A/,\mu_0=B^2A/4\mu_0=F_{T26}/4.$$

It is therefore seen that dividing the same amount of magnetic flux along two flux paths rather than along one flux path reduces the magnetic holding or coupling force on an armature to one-fourth rather than one-half as might have been expected. This unexpected magnetic holding or coupling force differential, resulting from multiple flux paths, can provide advantageous properties in linear, reciprocating, and rotary motion devices.

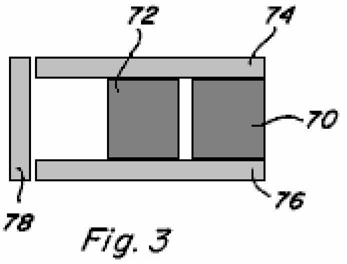

Fig. 3

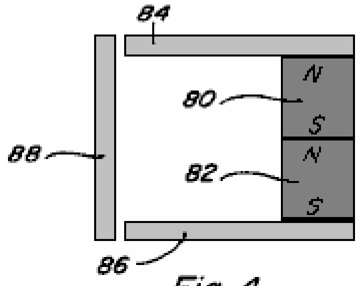

Fig. 4

Referring now to **Fig.3** and **Fig.4**, the behaviour of multiple magnetic flux sources arranged in parallel and series is described as compared to a single flux source. When identical flux sources or magnetic flux producing members **70** and **72** are positioned in parallel as shown in **Fig.3** with pole pieces **74** and **76** positioned adjacent the poles thereof to provide a flux path through armature **78**, the flux density B through armature **78** is double what the flux density would be if only one magnetic flux producing member were present. However, the field intensity H resulting from the two members **70** and **72** remains unchanged. This result holds true regardless of whether members **70** and **72** are both permanent magnets, are both electromagnets, or are a combination of one permanent magnet and one electromagnet. On the other hand, the properties resulting from magnetic flux producing members **80** and **82** arranged pole-to-pole in series between pole pieces **84** and **86**, with armature **88**, as shown in **Fig.4**, will vary depending on the nature of the members **80** and **82**.

In a first case, if both members **80** and **82** are permanent magnets, the magnetic field intensity H resulting from the two permanent magnets will be double that of one permanent magnet and the flux density B through armature **88** will be the same as what the flux density would be if only one permanent magnet type member were present.

In a second case, if both members **80** and **82** are electromagnets, the field intensity H again doubles and the flux density B increases according to the B/H curve or relationship of the pole piece **84**, **86** and armature **88** materials.

In a third case, if member **80** is a permanent magnet and member **82** is an electromagnet, the field intensity H again doubles, but, since the permanent magnet is near flux density saturation B_r the flux density can only be increased from B_r to B_{max} of the permanent magnet. At the point where electromagnet-type member **82** contacts permanent magnet-type member **80** the flux from the electromagnet-type member **82** couples with the flux of the permanent magnet-type member **82** until the flux density through permanent magnet-type member **80** reaches B_{max}. At that point additional flux from electromagnet-type member **82** does not contribute to the flux density along the flux path unless a bypass path around the permanent magnet-type member is provided. Use of such bypass paths will be described below.

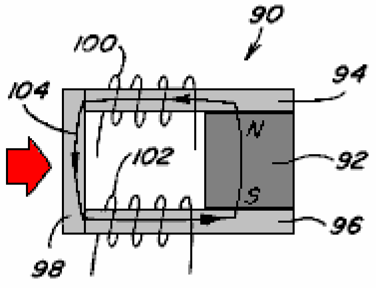

Fig. 5

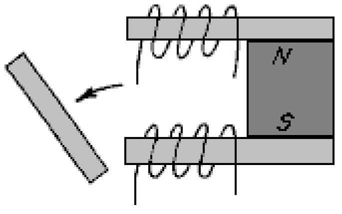

Fig. 6

Controlling the flow of flux along both one and multiple flux paths is best described with reference to **Figs.5-9**. In **Fig.5** and **Fig.6** a permanent magnet device **90** including a permanent magnet **92** having pole pieces **94** and **96** positioned adjacent to it's pole faces, and an armature **98** completing a low reluctance path **104** from pole to pole is shown. Control coils **100**, **102** are positioned along path **104**. When control coils **100**, **102** are not energised, the magnetic flux of permanent magnet **92** follows path **104** as shown and armature **98** is held in place against pole pieces **94**, **96** due to the resulting magnetic coupling forces. However, if coils **100**, **102** are energised to provide an equal but opposing magnetic flux to that of permanent magnet **92**, the result is that the magnetic flux of permanent magnet **92** is blocked and no magnetic flux traverses the path which includes armature **98** and therefore no magnetic coupling forces act on armature **98** allowing it to fall away as shown in **Fig.6**. The permanent magnet device **90** is useful, although as will become apparent below, it is more advantageous to provide multiple flux paths rather than one.

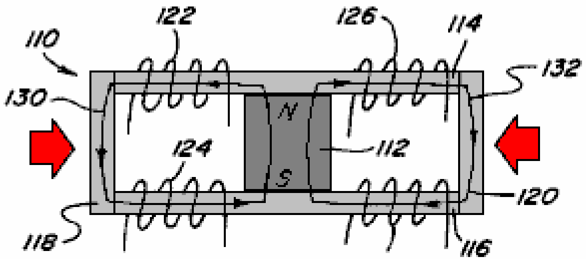

Fig. 7

In this regard, in **Fig.7** a permanent magnet device **110** includes a permanent magnet **112** having pole pieces **114**, **116** positioned adjacent the pole faces of it, with armatures **118**, **120** completing two low-reluctance paths **130**, **132** from pole to pole thereof. Control coils **122**, **124** are positioned along path **130** and control coils **126**, **128** are positioned along path **132**. The two paths provided are assumed to be of equal reluctance. With no coils energised, the magnetic flux of permanent magnet **112** divides equally along flux path **130** and flux path **132** such that both armatures **118**, **120** are subjected to a magnetic coupling force which holds them in place against pole pieces **114**, **116**.

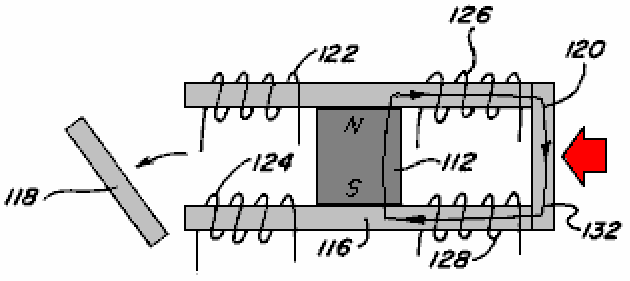

Fig. 8

If coils **122**, **124** are energised to provide a magnetic flux equal to but opposing the magnetic flux which travels along flux path **130** from permanent magnet **112** when no coils are energised, the result is that the magnetic flux of permanent magnet **112** is blocked and no magnetic flux traverses the path which includes armature **118** and therefore no magnetic coupling forces act on armature **118** allowing it to fall away as shown in **Fig.8**. Further, the magnetic flux traversing path **132** will be double that of when no coils are energised and therefore the magnetic coupling force on armature **120** will be about four (4) times that of when no coils are energised. By energising coils **126**, **128** in an opposing manner a similar result would be achieved such that armature **120** would fall away and such that the magnetic coupling force on armature **118** would be increased.

If coils **122**, **124** are energised to provide a magnetic flux equal to and aiding the magnetic flux which travels along flux path **130** when no coils are energised, the result is that the control coils couple completely with the magnetic flux of permanent magnet **112** and no magnetic flux traverses the path which includes armature **120** and therefore no magnetic coupling forces act on armature **120** allowing it to fall away as shown in **Fig.9**. Further, the magnetic flux traversing path **130** will be double that of when no coils are energised and therefore the magnetic coupling force on armature **118** will be about four (4) times that when no coils are energised. By energising coils **126**, **128** in an aiding manner a similar result would be achieved such that armature **118** would fall away and the magnetic coupling force on armature **120** would be increased.

Based on the foregoing, it is seen that the full magnetic coupling force available from the permanent magnet **112,** can be switched from one path to another path by the application of one half the power it would require for a coil alone to produce the same magnetic flux along one path. The ability to switch the full magnetic coupling force easily from one path to another, allows for efficient reciprocating, linear, and rotary motion and power conversion to be achieved.

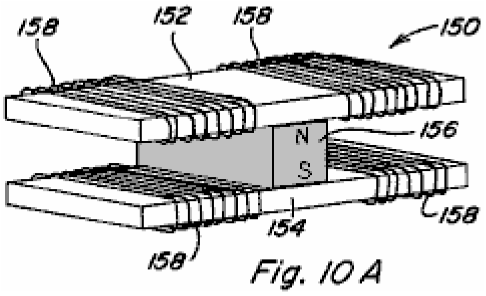

Fig. 10 A

The basic device utilised to achieve permanent magnet flux division and to control such permanent magnet flux division is defined herein as a "permanent magnet control component," various configurations of which are shown by way of example only, and not by way of limitation, in **Figs.10A-10F**. **Fig.10A** depicts a permanent magnet control component **150** in which pole pieces **152** and **154** are positioned adjacent to the pole faces of permanent magnet **156** to provide two magnetic flux paths extending from opposite sides of permanent magnet. Control coils **158** are positioned along each path.

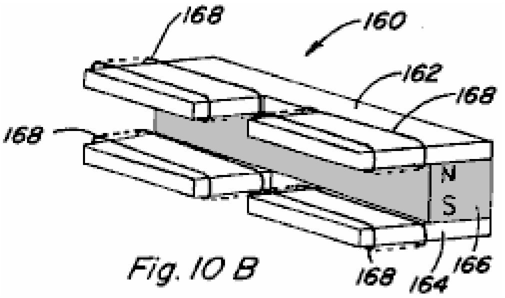

Fig. 10 B

Fig.10B depicts a permanent magnet control component **160** in which pole pieces **162** and **164** are positioned against the pole faces of permanent magnet **166** to provide two spaced, adjacent magnetic flux paths extending from the same side of permanent magnet **166**. Control coils **168** are positioned along each path.

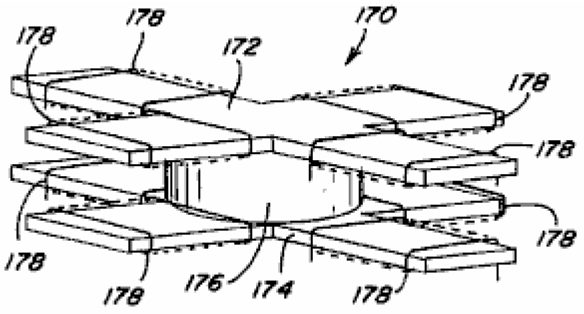

Fig. 10 C

Fig.10C depicts a permanent magnet control component **170** in which pole pieces **172** and **174** are configured so as to be positioned adjacent the pole faces of permanent magnet **176** so as to provide four flux paths, each flux path extending in a respective direction from permanent magnet **176**. Control coils **178** are also positioned along each path.

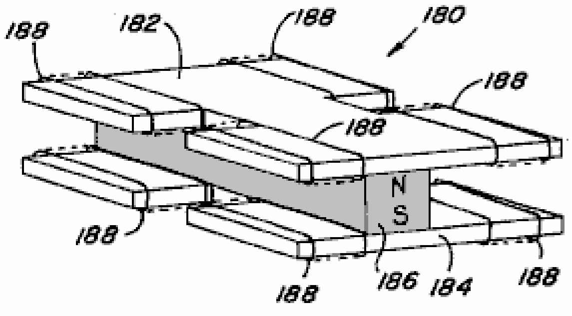

Fig. 10D

Fig.10D depicts another four-path configuration of a permanent magnet control component **180** in which pole pieces **182**, **184** are configured and positioned to provide four flux paths for permanent magnet **186**, with a pair of spaced, adjacent flux paths extending from each side of permanent magnet **186**. Control coils **188** are positioned along each path.

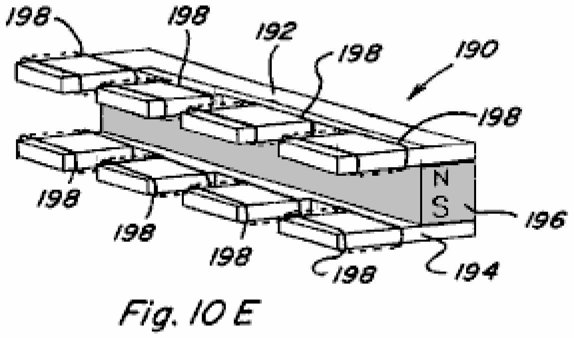

Fig. 10 E

Fig.10E depicts another four-path configuration of a permanent magnet control component **190** in which all four flux paths formed by pole pieces **192**, **194** extend from one side of permanent magnet **196**. Again, control coils **198** are positioned along each flux path.

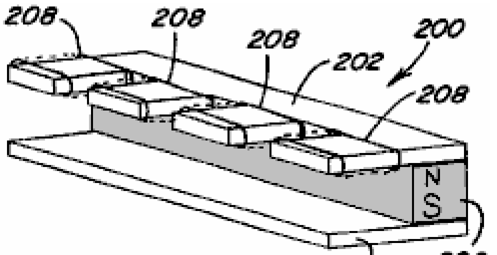

Fig. 10 F

Fig.10F still further depicts a four-path configuration of a permanent magnet control component **200** in which pole pieces **202**, **204** extend to one side of permanent magnet **206**, with pole piece **202** defining four flux paths and with pole piece **204** including a continuous return path. Control coils **208** are positioned along each path of pole piece **202**. Many other variations are possible.

Accordingly, it is seen that a variety of different configurations of permanent magnet control components are possible, in accordance with the present invention. The important considerations for division of permanent magnet flux in such permanent magnet control components include, extending each pole piece to, or beyond, the outer perimeter of the pole face of the permanent magnet in each region where a flux path is intended and assuring that the pole face of the permanent magnet intersects each of the flux paths. It is not necessary for each pole piece to include the same number of path portions extending beyond the perimeter of the respective permanent magnet pole face as noted with reference to permanent magnet control component **200**. Although two control coils are shown along each of the flux paths in **Figs.10A-10E**, it is apparent from component **200** in **Fig.10F** that one control coil positioned along a flux path is generally sufficient for purposes of the present invention. Further, although in the illustrated configurations each pole piece is positioned to contact a respective pole face of the permanent magnet, a small spacing between a pole piece and its adjacent permanent magnet pole face could be provided, particularly in applications where relative movement between the subject pole piece and the permanent magnet will occur.

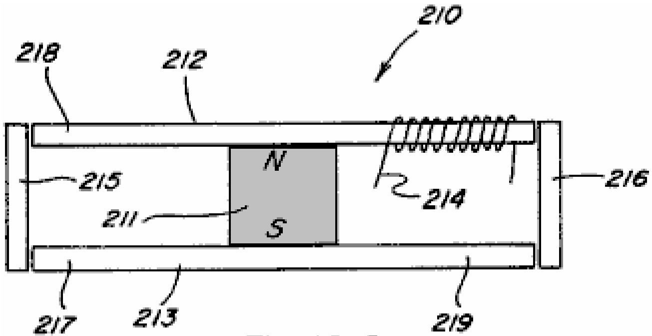

Fig. 10 G

In its simplest form a two path permanent magnet control component only requires one control coil positioned along one of the control paths to permit the magnetic flux of a permanent magnet to be switched between the two paths. In particular, a side view of such a two path component **210** is shown in **Fig.10G** and includes a permanent magnet **211** pole pieces **212** and **213**, and control coil **214** which may be connected to a suitable control circuit. By alternating energising control coil **214** in an opposing manner and an aiding manner the magnetic flux of permanent magnet can be switched between the path including armature **215** and the path including armature **216**. When control coil **214** is energised in an opposing manner the magnetic flux will traverse the path including armature **215** and when control coil **214** is energised in an aiding manner the magnetic flux will traverse the path including armature **216**. Control coil 214 could also be placed at any of the positions **217**, **218**, or **219** to achieve the flux path switching.

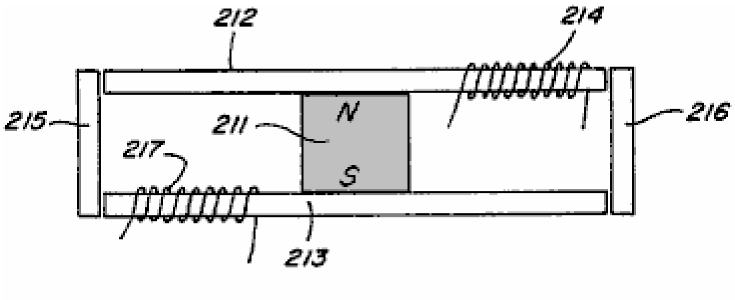

Fig. 10 H

Further, in the two coils embodiment shown in **Fig.10H** control coil **217** is added. In such a device, flux switching can be achieved by simultaneously energising control coil **214** in a flux aiding manner and control coil **217** in a flux opposing manner, and by then simultaneously reversing the energisation of the respective control coils **214** and **217**.

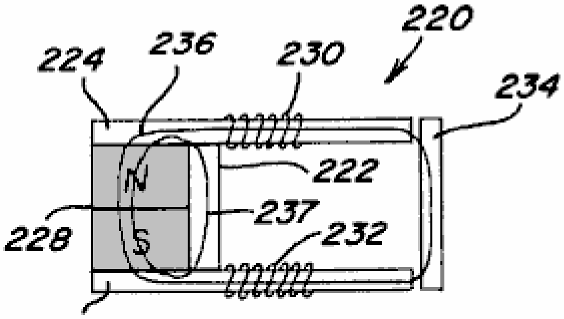

Fig. 11A

Reference is made to **Figs.11A-11F** which depict devices similar to that of **Figs.5-6** except that a bypass, formed of magnetic material, is provided in each case. In device **220** of **Figs.11A-11C** a bypass **222** is provided from pole piece **224** to pole piece **226** and is located between permanent magnet **228** and control coils **230**, **232**, with armature **234** located adjacent the ends of pole pieces **224**, **226**. In **Fig.11A** with no coil energisation, magnet flux components **236** and **237** travel as shown.

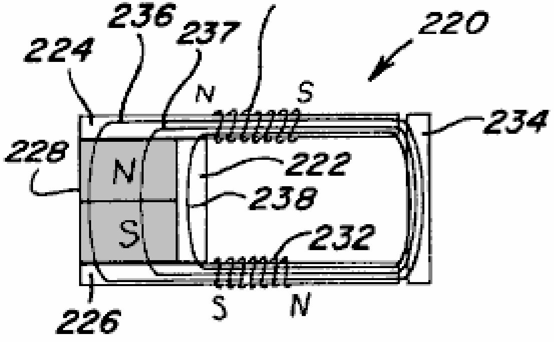

Fig. 11 B

When coils **230** and **232** are energised in an aiding or adding manner as in **Fig.11B**, the result is permanent magnet magnetic flux components **236** and **237** travelling as shown, and with the added magnetic flux component

238 from coils **230** and **232** also travelling as shown. Thus, in device **220** energising the coils in an aiding manner results in an increased magnetic coupling force on armature **234**.

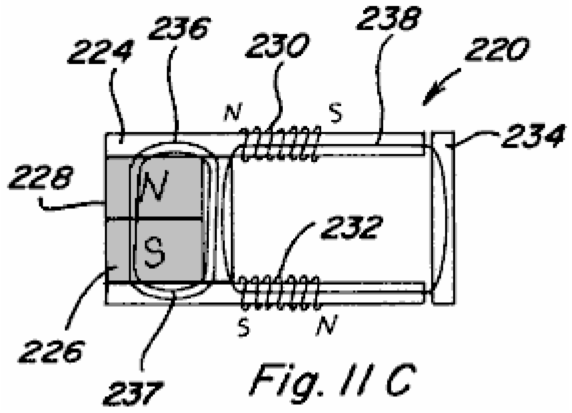

Fig. 11 C

In **Fig.11C** coils **230**, **232** are energised in an opposing exceeding manner which results in permanent magnetic flux components **236** and **237** travelling as shown and excess magnetic flux component **238** travelling as shown. Thus, in device **220** energising the coils in an opposing exceeding manner results in magnetic coupling force on armature **234**, albeit smaller than that in the aiding exceeding case.

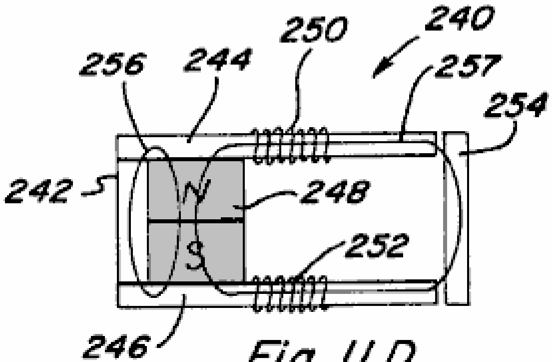

Fig. 11 D

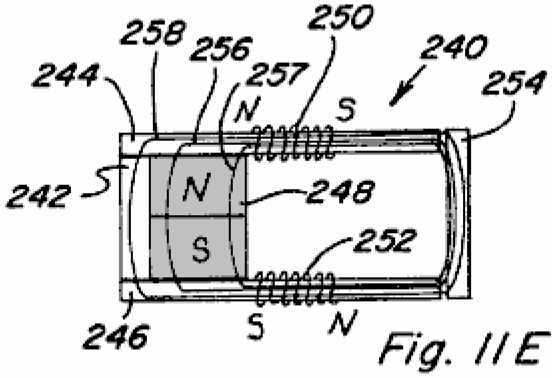

Fig. 11 E

In device **240** of **Figs.11D-11F** a bypass **242** is provided between pole piece **244** and pole piece **246** but is located on an opposite side of permanent magnet **248** as compared to control coils **250**, **252** and armature **254**. Permanent magnet flux components **256** and **257** are shown for no coil energisation in **Fig.11D**. In **Fig.11E** the paths of permanent magnet flux components **256** and **257**, as well as excess coil magnetic flux **258**, are shown when coils **250**, **252** are energised in an aiding exceeding manner.

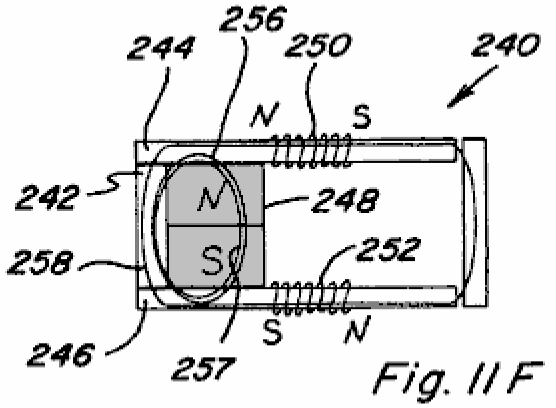

Fig. 11 F

In **Fig.11F** the path of each magnetic flux component **256**, **257**, and **258** is shown when coils **230**, **232** are energised in an opposed exceeding manner.

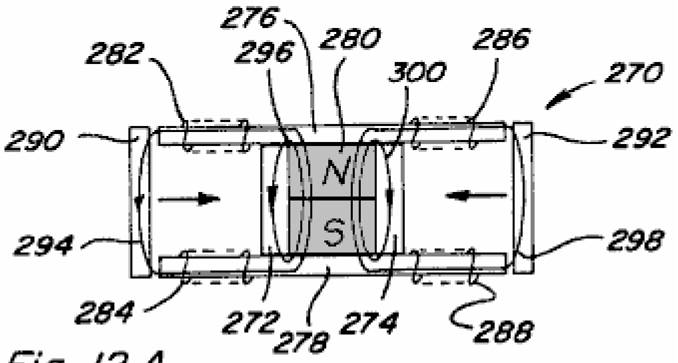

Fig. 12 A

Figs.12A-12E depict a device **270** similar to that shown in **Figs.7-9** except that bypasses **272** and **274** are provided from pole piece **276** to pole piece **278**. Bypass **272** is located between permanent magnet **280** and control coils **282**, **284** and bypass **274** is located between permanent magnet 280 and control coils **286**, **288**. Armatures **290** and **292** are also provided. When no coils are energised permanent magnet magnetic flux components **294**, **296**, **298**, and **300** travel as shown in **Fig.12A**.

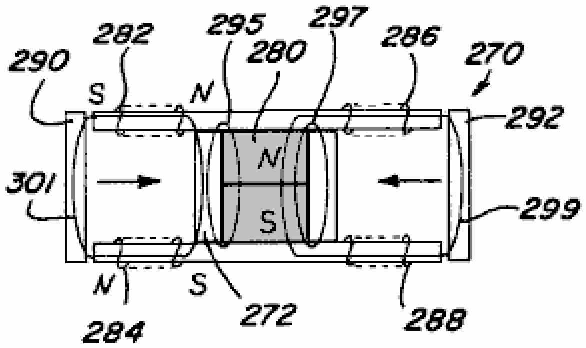

Fig. 12 C

If coils **282**, **284** are energised in an opposing manner permanent magnet flux components **295**, **297**, and **299** travel as shown, with no flux component traversing the path which includes armature **290** and therefore no magnetic coupling force acting thereon. This would be the case when coils **282**, **284** are energised to the level where the coils magnetic flux just blocks, but does not exceed, the magnetic flux component **294** (**Fig.12A**) from permanent magnet **280**. However, if coils **282**, **284** are energised in an opposed exceeding manner an excess coil magnetic flux component **301** is produced which travels a path including armature **290** and bypass **272** results as shown in **Fig.12C**.

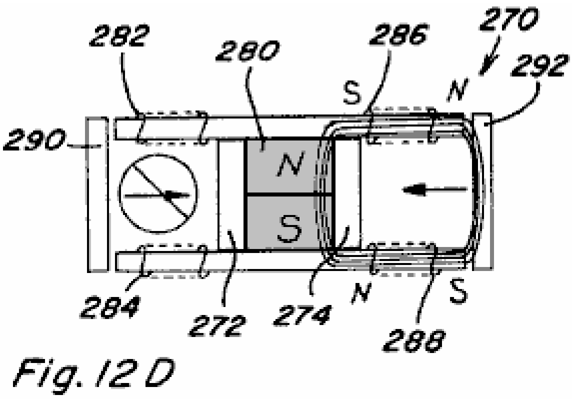

Fig. 12 D

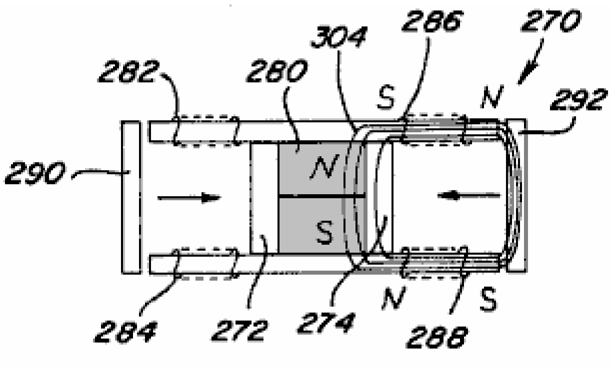

Fig. 12 E

Coils **286**, **288** may be energised in an aiding manner such that all permanent magnet magnetic flux travels along the path which includes armature **292** as shown in **Fig.12D**. If coils **286**, **288** are energised in excess of the level of **Fig.12D** then the excess magnetic flux component **304** traverses the path which includes armature **292** and bypass **274** as shown in **Fig.12E**, thereby increasing the magnetic coupling force on armature **292** as compared to **Fig.12D**. The advantage of incorporating such bypasses into permanent magnet control components in certain applications will become apparent below.

Reciprocating Motion

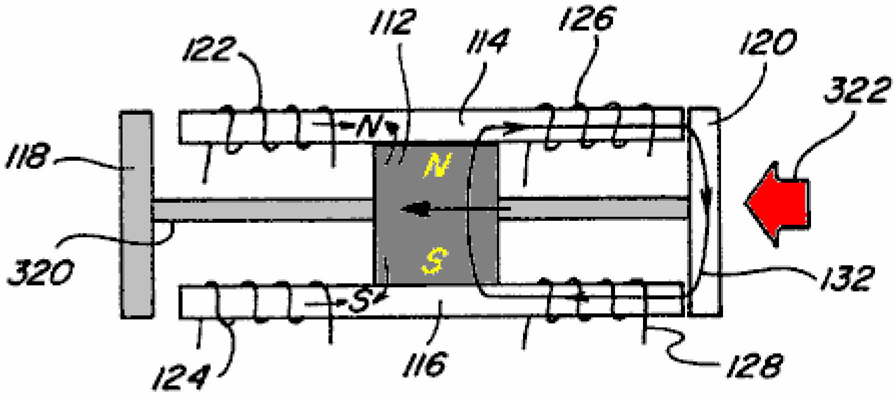

Fig. 13 A

As mentioned above, controlling the path of magnetic flux from a permanent magnet can be useful in a variety of applications such as achieving reciprocating motion. In this regard, if the device **110** of **Figs.7-9** is modified such that armatures **118** and **120** are fixed to a sliding shaft **320** as shown in **Figs.13A-13C**, and if the distance between the armatures is greater than the end to end length of pole pieces **114**, **116**, limited linear motion in two directions (left and right in **Figs.13A-13C**), and therefore linear reciprocating motion, can be achieved by the timed, alternate delivery of electrical signals to control coils **122**, **124** and control coils **126**, **128**. By way of example, **Fig.13A** represents the position of shaft connected armatures **118**, **120** when coils **122**, **124** are energised in an opposing manner to block the flux of permanent magnet **112** such that all magnetic flux traverses path **132** as shown and such that the resulting magnetic coupling force acts to the left as indicated by arrow **322.**

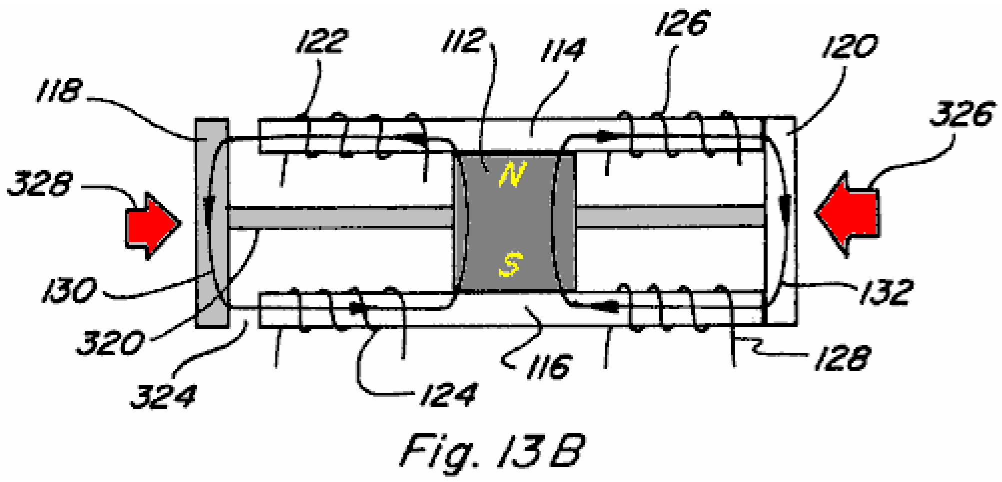

Fig. 13B

As shown in **Fig.13B** when coils **122**, **124** are de-energised the magnetic flux from permanent magnet **112** can again travel along path **130** through armature **118**. However, due to the air gap **324** between armature **118** and pole pieces **114**, **116** the reluctance along path **130** will be significantly greater than the reluctance along path **132**. Accordingly, the amount of magnetic flux which flows along path **130** will be less than the amount of magnetic flux which flows along path **132** such that the magnetic coupling force on armature **118** acting to the right will be significantly less than the magnetic coupling force on armature **120** acting to the left as shown by arrows **326** and **328**, which arrows are sized to represent the strength of the respective directional force.

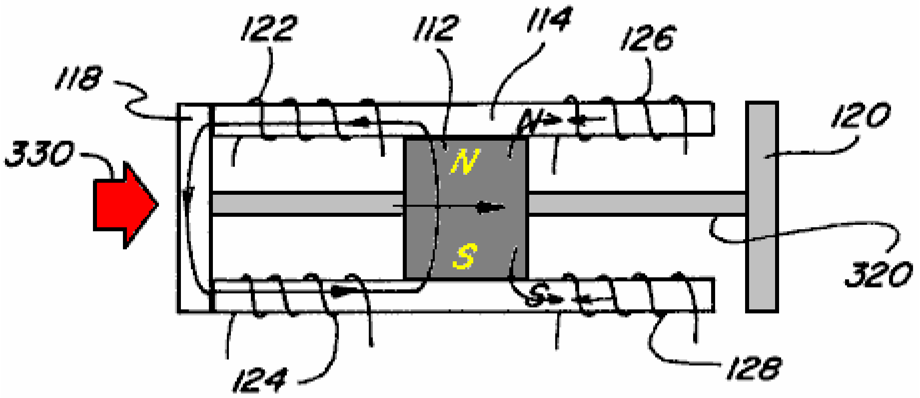

Fig. 13 C

Fig.13C represents the position of shaft connected armatures **118**, **120** after coils **126**, **128** are energised in a manner to oppose the flux of permanent magnet **112** such that all flux traverses path **130** and the resulting magnetic coupling force on armature **118**, depicted by arrow **330**, moves the shaft **10** connected armatures **118**, **120** to the right.

Control coils **122**, **124** and **126**, **128** could also be energised in a flux aiding manner to achieve the same result. In such a device, **Fig.13A** would represent coils **126**, **128** energised to aid magnetic flux along path **132**, **Fig.13B** would again represent no coils energised, and **Fig.13C** would represent coils **122**, **124** energised to aid magnetic flux along path **130**.

Thus, by alternately energising and de-energising control coils **122**, **124** and **126**, **128** a linear reciprocating motion of shaft connected armatures **118**, **120** may be achieved. Further, such reciprocating motion may be achieved by energising the coils in either an opposing or aiding manner. The magnetic coupling force exerted on a given armature when **20** the control coils are energised to establish all magnetic flux along a single path which includes that armature is significantly greater than the magnetic coupling force which would be exerted on such armature by an identical energisation of the control coils in the absence of the permanent magnet.

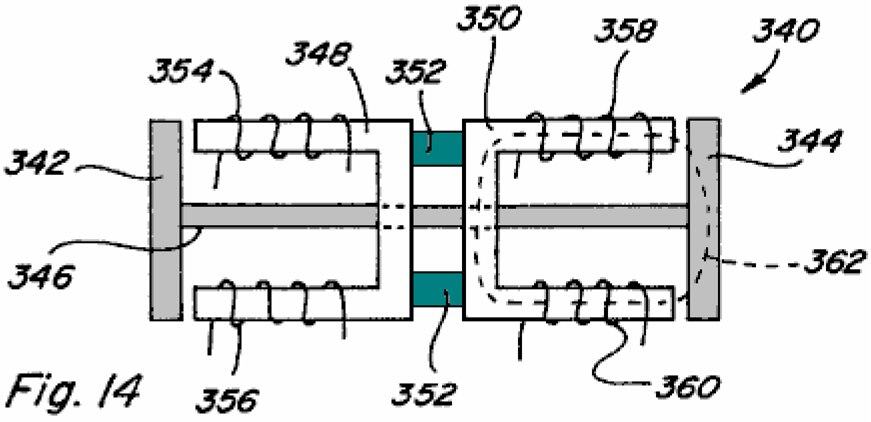

Fig. 14

This is demonstrated with reference to **Fig.14** which depicts a reciprocating device **340** in which only coils or electromagnets are utilised. As shown armatures **342** and **344** are connected by shaft **346**, and each armature **342**, **344** includes a respective U-shaped pole path piece **348**, **350** which pole path pieces are mechanically connected by a non-magnetic material **352**. Each pole path piece **348** and **350** has respective control coils **354**, **356** and **358**, **360** positioned along them. By comparison with the device of **Figs.13A-13C**, if coils **358**, **360** of device **340** are energised to cause magnetic flux flow in either direction, clockwise or counterclockwise, along path **362**, the amount of electrical energy which would be required in order to achieve the same magnetic coupling force on armature **344** as achieved on armature **120** above in **Fig.13A** would be twice that delivered to coils **122**, **124** or **126**, **128** in **Fig.13A**. It is therefore demonstrated, that by controlling or switching the flow of magnetic flux from a permanent magnet between at least two different paths results in greater coupling forces per unit of input electrical energy, and therefore that such control or switching will enable more work to be achieved per unit of input electrical energy.

As described above, if a coil is energised beyond the point where the magnetic flux produced by the coil aiding the amount of the permanent magnet's flux that is either opposed or aided, the extra magnetic flux needs a low reluctance path between the poles of the coil that produces the excess magnetic flux. If a complete low-reluctance path is not provided for the excess magnetic flux, there is little potential for taking advantage of the excess magnetic flux in terms of producing additional magnetic coupling forces. The path for such excess flux cannot be through a permanent magnet member. In assemblies which include an armature on each path, the armature will provide the necessary low-reluctance path.

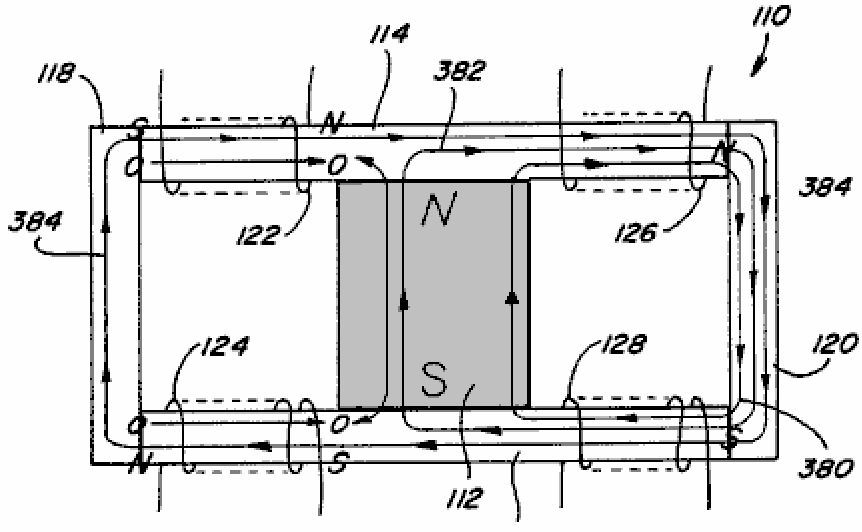

Fig. 15

Referring to **Fig.15**, various components of the magnetic flux in device **110** (**Figs.7-9**) are depicted by numerals **380**, **382**, and **384** for the case when coils **122**, **124** are energised to oppose the magnetic flux of permanent magnet **112** in an amount which exceeds the level of magnetic flux which permanent magnet **112** would cause to flow through armature **118** when no coils are energised. **Fig.15** is likewise representative of the case when coils **126**, **128** are energised to aid the magnetic flux of permanent magnet **112** by an amount which exceeds the level of magnetic flux which permanent magnet **112** would cause to flow through armature **118** when no coils are energised. In particular, magnetic flux component **380** represents the magnetic flux of permanent magnet **112** which normally flows through the path including armature **120**; magnetic flux component **382** represents the magnetic flux of permanent magnet **112** which is diverted by the opposing field of coils **122**, **124** so as to traverse the path which includes armature **120**; and magnetic flux component **384** represents the magnetic flux produced by coils **122**, **124** which is in excess of the diverted magnetic flux **382**. As shown, the excess magnetic flux **384** produced by coils **122**, **124** traverses the path which includes armature **120** and bypasses permanent magnet **112** so as to also traverse the path which includes armature **118**. Thus, the excess magnetic flux produced by coils **122**, **124** adds to the permanent magnet flux traversing the path which includes armature **120**, thus increasing the magnetic coupling force on armature **120**, while at the same time providing a magnetic coupling force on armature **118**.

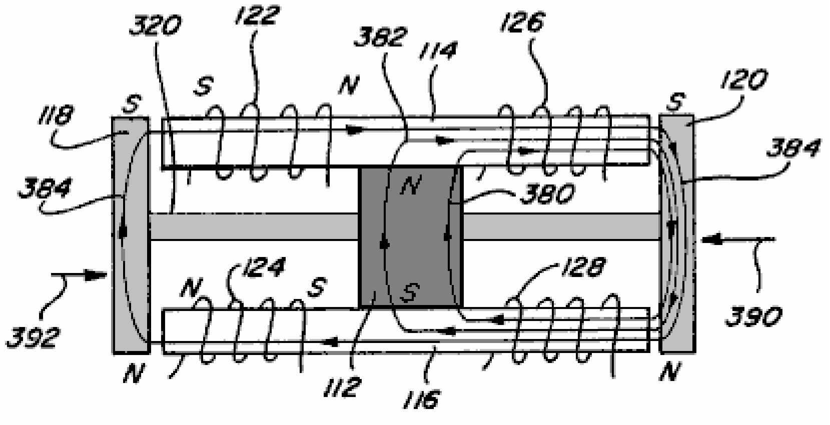

Fig. 16 A

In a reciprocating device where armatures **118** and **120** are connected by shaft **320** as shown in **Figs.13A-13C** and again in **Fig.16A**, excess magnetic flux **384** will increase magnetic coupling force **390** on armature **120** acting to the left. However, because such excess flux **384** also traverses the path which includes armature **118**, such excess magnetic flux **384** also results in a magnetic coupling force **392** on armature **118** which acts to the right. Even though excess magnetic flux **384** traversing the path which includes an armature **118** has an opposite polarity to that which would traverse the path due to permanent magnet **112**, the magnetic coupling force on armature **118** still acts to the right because armature **118** is not polarity sensitive, that is, armature **118** will be attracted regardless of the direction of the magnetic flux traversing the path. The overall effect is that a resultant force which is the difference between force **390** and force **392** will act on the shaft-connected armatures **118**, **120**. However, if armatures **118** and **120** were formed by permanent magnets having polarities as shown at the top and bottom of such armatures, the force acting on each armature would be in the same direction and therefore additive.

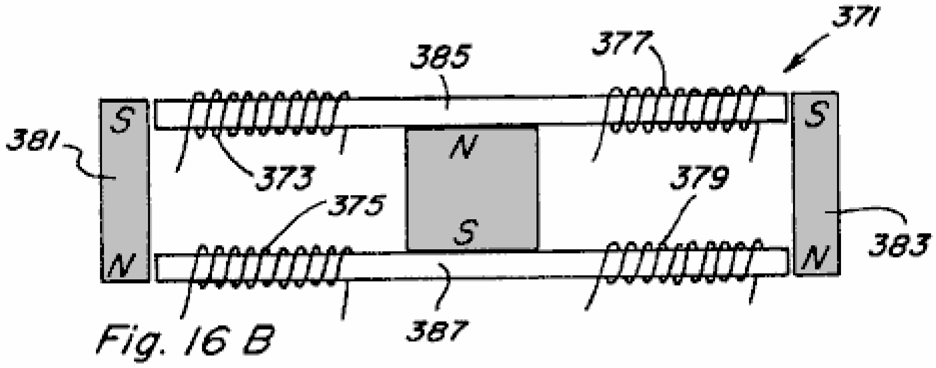

Fig. 16 B

In this regard reference is made to **Fig.16B** in which a two path device **371** having four control coils **373**, **375**, **377** and **379** is shown with the illustrated armatures being formed by permanent magnets **381** and **383** having polarities as shown. With no coils energised both permanent magnet armatures **381** and **383** are attracted to the ends of pole pieces **385** and **387**. With coils **373**, **375** energised in an opposing manner and coils **377**, **379** energised in an aiding manner, the attractive force on permanent magnet armature **383** will generally increase and the attractive force on permanent magnet armature **381** will generally decrease.

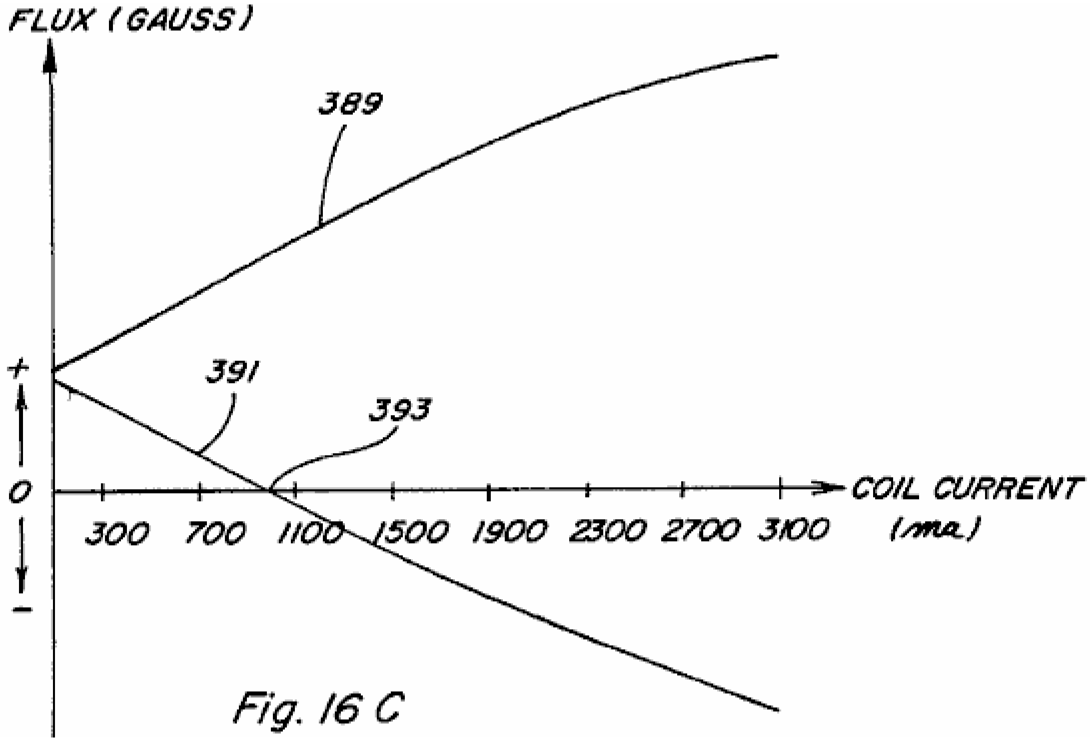

Fig. 16 C

This is demonstrated with reference to the graph of **Fig.16C** which depicts a graph of the current flowing in the control coils on the x-axis verses the magnetic flux in gauss on the y-axis with line **389** representing the flux along the aiding side of device **371** and line **391** representing the flux along the opposing side of device **371**. As shown, the magnetic flux on the coil opposing side decreases as the coil current increases and passes through zero at point **393**. After point **393**, reverse magnetic flux begins to be produced and would result in a repelling force on permanent magnet armature **381**. In some applications, particularly those where permanent magnet armatures and rotors are not utilised, it is critical to recognise point **393** so that reverse magnetic flux is not produced.

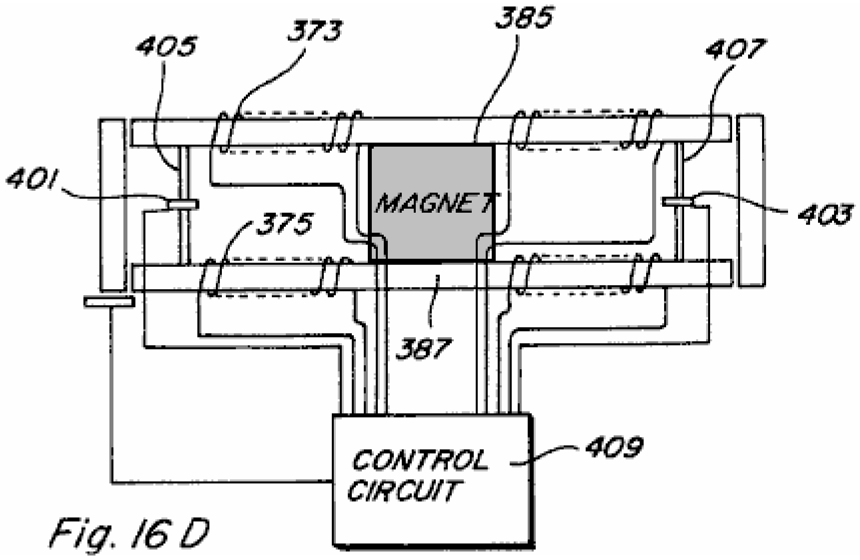

Fig. 16 D

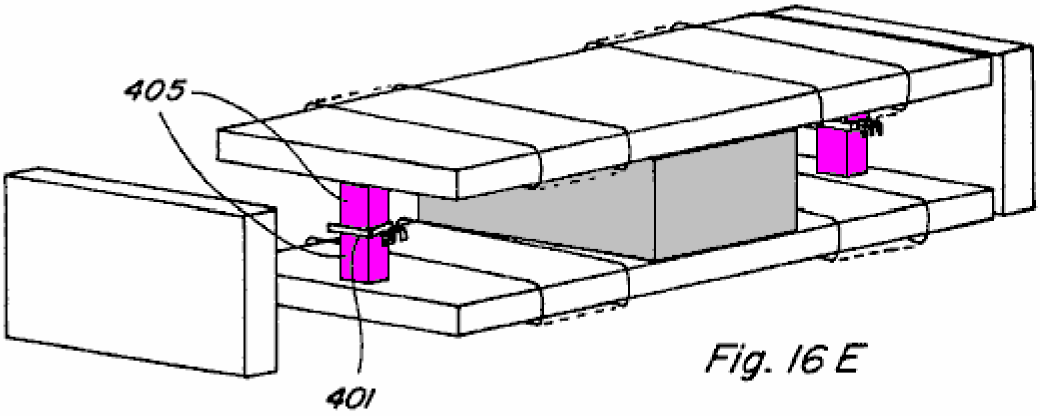

Fig. 16 E

In this regard, reference is made to **Fig.16D** and **Fig.16E**, in which use of Hall Effect switches **401** and **403** is made to enable control of the coil energising current in situations where it is desirable to prevent reverse magnetic flux. As shown, small bypasses **405** and **407** are provided with Hall Effect switches **401** and **403** positioned in gaps along them, the switches being connected to control circuit **409**. As the flux travelling along the bypass path falls to zero, the Hall Effect switch can be utilised to prevent further energisation of the control coils so that no reverse flux is created.

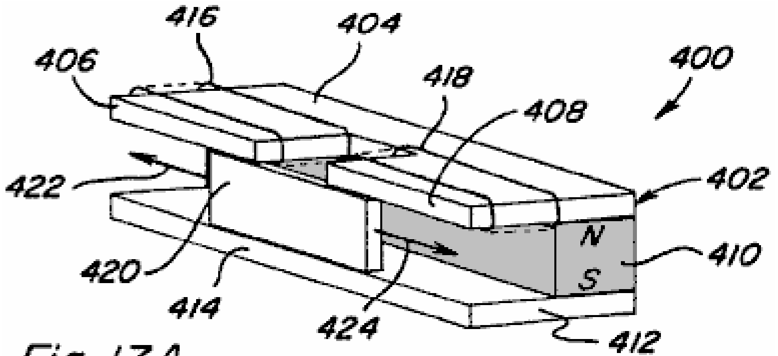

Fig. 17A

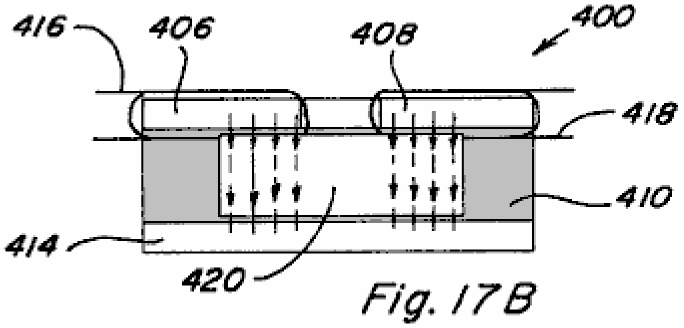

Fig. 17 B

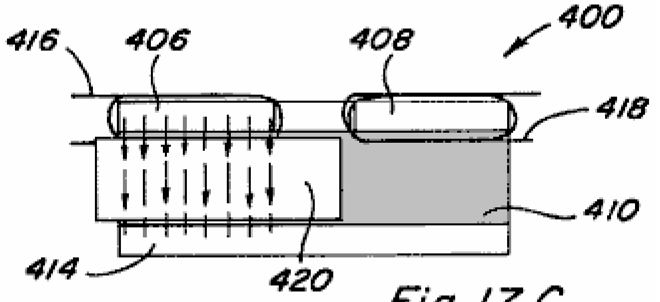

Fig. 17 C

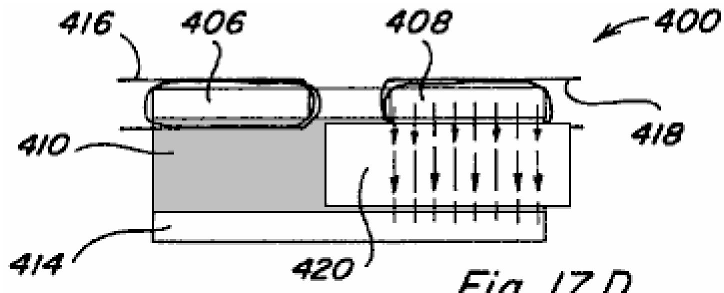

Fig. 17D

Another embodiment of a device **400** which would provide reciprocating motion is shown in **Figs.17A-17D** in which a permanent magnet control component **402** having two flux paths may is provided. A first pole piece **404**, has two spaced, adjacent path portions **406** and **408** extending beyond the perimeter of the pole face of permanent magnet **410**, and a second pole piece **412** includes only one continuous portion **414** extending beyond the perimeter of the pole face of permanent magnet **410**, each path portion **406** and **408** of pole piece **404** being substantially aligned with at least a part of portion **414** of pole piece **412**. Control coil **416** is positioned along pole piece path portion **406** and control coil **418** is positioned along pole piece portion **408.** An armature **420** is positioned in the region between pole piece path portions **404**, **406** and pole piece portion **414** and is free to slide from side to side as shown by arrows **422** and **424**.

A front view of component device **400** with no coils energised and armature **420** at a mid-point depicts flux flowing from the north pole face of permanent magnet **410**, through each of pole piece path portions **406** and **408**, through armature **420**, and returning to the south pole face through pole piece portion **414**. Thus, the magnetic flux divides equally along two paths. If coil **416** is energised in an aiding manner, or if coil **418** is energised in an opposing manner, all or a majority of the magnetic flux of the permanent magnets can be made to flow through pole piece portion **406** so that a resulting magnetic coupling force on armature **420** causes it to move to the left as shown in **Fig.17C**.

Likewise, if control coil **416** is energised in an opposing manner, or if control coil **418** is energised in an aiding manner, all or a majority of the permanent magnet flux can be made to flow through pole piece path portion **408** such that a resulting magnetic coupling force on armature **420** causes it to move to the right as shown in **Fig.17D**. Accordingly, by alternately energising and de-energising coils **416** and **418** a reciprocating motion of armature **420** may be achieved.

Linear Motion

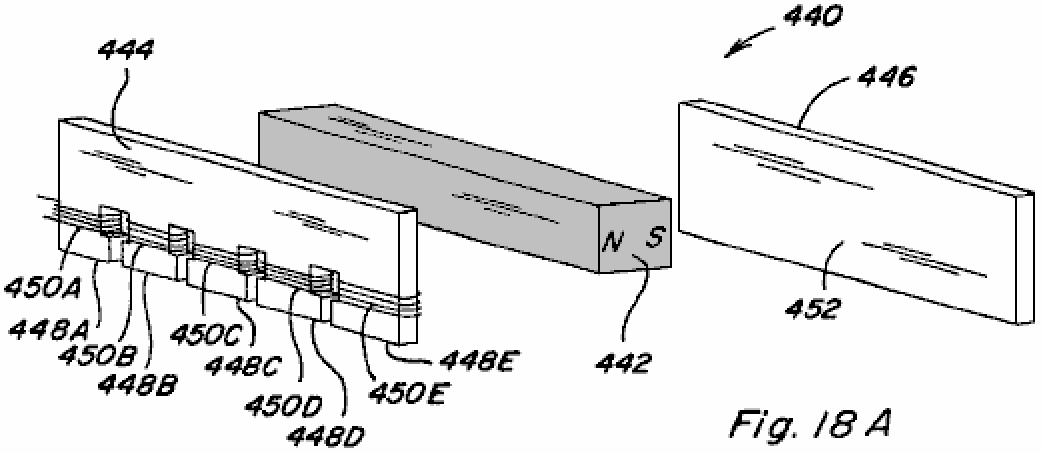

Fig. 18A

Referring now to **Figs.18A-18E**, linear motion in accordance with the present invention is described. In particular, a permanent magnet control component **440** including a permanent magnet **442** with a pole piece **444** positioned against it's north pole face and a pole piece **446** positioned against it's south pole face is shown in an exploded view in **Fig.18A** and assembled in **Fig.18B**.

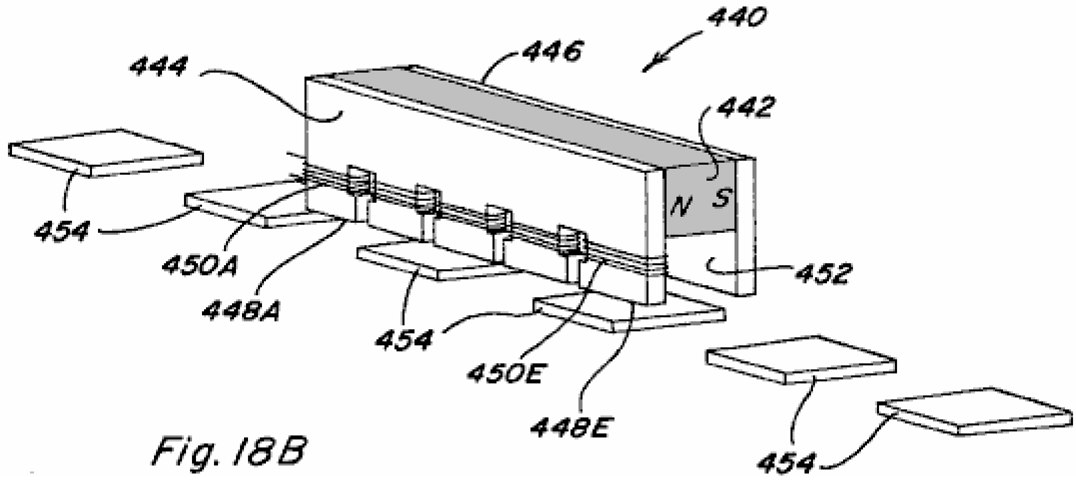

Fig. 18B

Pole piece **444** includes five path portions **448A-448E** which extend beyond the edge of the north pole face of permanent magnet **442** to one side of it and at respective positions along it's length, and it has path portion **448A-448E** each with a control coil **450A-450E** positioned around them. Pole piece **446** includes one portion **452** extending beyond the edge of the south pole face of permanent magnet **442** to the one side of it, and this portion **452** extends along the entire length of permanent magnet **442**. A number of armatures **454** define a path of relative movement between permanent magnet control component **440** and such armatures **454**, and by providing timed energisation of given control coils **450A-450E** such relative movement can be achieved.

Fig. 18C

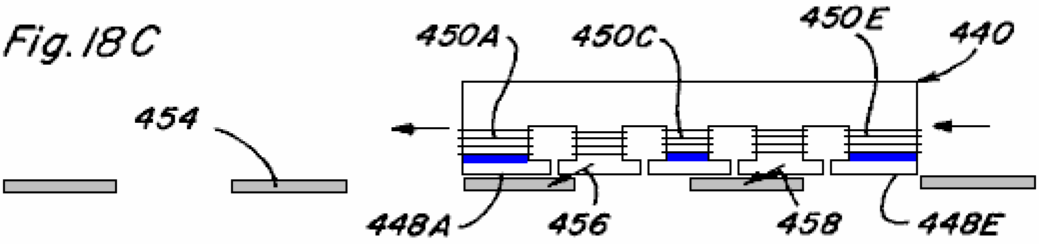

Fig. 18D

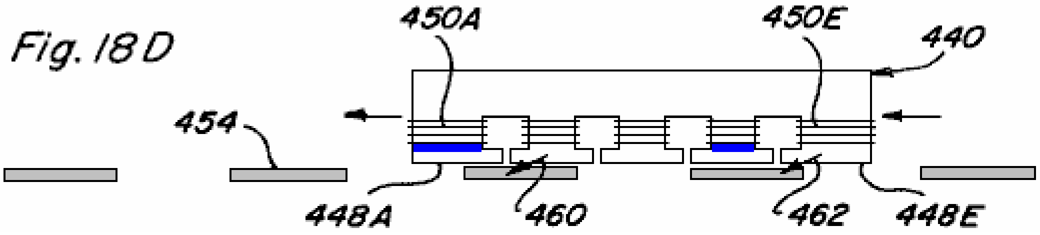

Fig. 18E

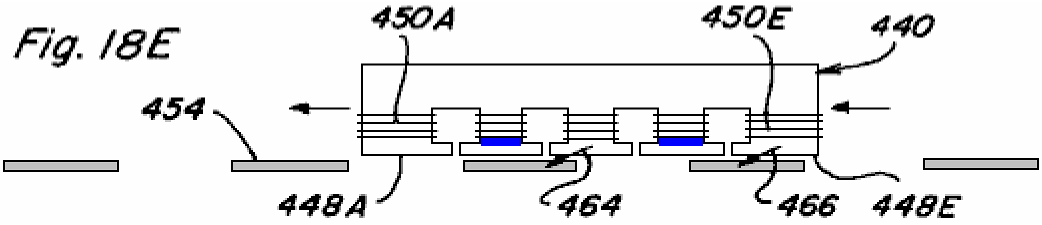

The sequence of side views depicted in **Figs.18C-18E** illustrate such relative movement,
with coils **450A**, **450C** and **450E** being **energised** in an opposing manner simultaneously in **Fig.18C**,
with coils **450A** and **450D** being **energised** simultaneously in an opposing manner in **Fig.18D**, and
with coils **450B** and **450D** being **energised** simultaneously in an opposing manner in **Fig.18E**.

In **Fig.18C**, magnetic flux will only flow along path portions **448B** and **448C** of pole piece **444** causing resultant magnetic coupling forces depicted by arrows **456**, **458** which act to move permanent magnet control component **440** to the left, assuming armatures **454** are fixed. Similarly, due to the timing of subsequent coil energisation resultant magnetic forces depicted by arrows **460**, **462** in **Fig.18D** and arrows **464**, **466** in **Fig.18E** act to continue movement of permanent magnet control component **440** to the left. Thus, if permanent magnet control component **440** were fixed to a device or structure, controlled movement of the device or structure along the path defined by armatures **454** could be achieved. Conversely, if permanent magnet control component **440** were fixed and armatures **454** were located on a device or structure, controlled movement of the device or structure could also be achieved. It is also easily recognised that by varying the coil energisation sequence and timing relative movement in the opposite direction can be achieved. Further, if the permanent magnet was doughnut shaped and the armatures were arranged in a circumferential pattern, rotary motion would likewise be achievable.

Rotary Motion

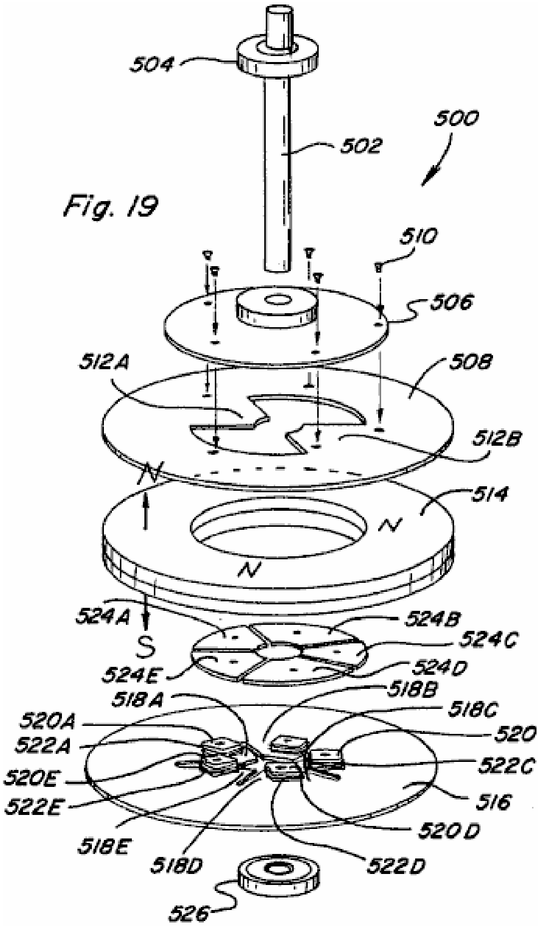
Fig. 19

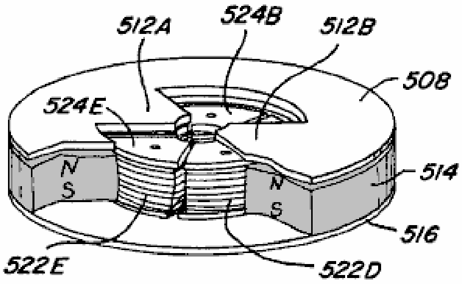
Fig. 20

One embodiment of a rotary motion device or motor **500** which incorporates various permanent magnet flux control aspects of the present invention is shown in the exploded view of **Fig.19** and in the partial assembled view of **Fig.20**. Motor **500** includes a rotor assembly which includes a shaft **502** and associated upper bearing **504**, a non-magnetic disk member **506** mounted for rotation with shaft **502**, and a rotor pole piece **508** which is mounted for rotation with disk member **506** such as by the use of screws **510**. Rotor pole piece **508** includes a ring-shaped portion having two inwardly extending magnetic flux path portions **512A** and **512B**. A stator assembly of motor **500** includes a doughnut or ring-shaped permanent magnet **514** having an upwardly directed north pole face positioned adjacent and in close proximity to rotor pole piece **508**, and a downward directed south pole face positioned adjacent and in contact with a stator pole piece **516**. Stator pole piece includes a ring-shaped portion having five inwardly projecting path portions **518A-518E**. Each path portion includes a respective winding post **520A-520E** extending therefrom and having a respective control coil **522A-522E** wound on it. Stator pole piece faces **524A-524E** are which can be positioned on respective winding posts **518A-518B** and, as shown in the partial assembly of **Fig.20**, are substantially aligned with the top surface of permanent magnet **514** so as to be which can be positioned adjacent rotor path portions **512A** and **512B** when aligned therewith. Each of winding posts **518A-518E** and stator pole piece faces are formed of magnetic material, and although shown as separate pieces, an integral, one piece stator could be formed with similar winding posts and pole piece faces machined on it. Lower bearing **526** is also shown.

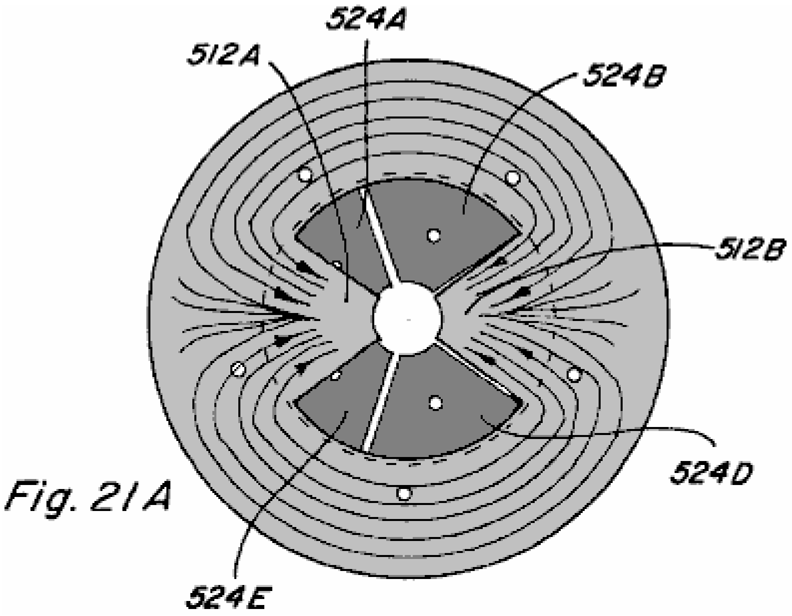

Fig. 21A

Figs.21A-21E illustrate top views of the partial assembly of **Fig.20** with magnetic flux shown. In **Fig.21A** magnetic flux travel when none of coils **522A-522E** are energised is depicted. Disregarding leakage flux, due to the low-reluctance path provided by rotor pole piece path portions **512A** and **512B**, the majority of magnetic flux from the north pole face of permanent magnet **514** will travel radially inward along one of such path portions before passing downward through the stator assembly and returning to the south pole face of permanent magnet **514**. It is noted that rotor pole piece **508** includes two path portions and stator pole piece **516** includes five path portions such that rotor pole piece path portions **512A** and **512B** will always be skewed relative to the stator pole piece faces **524A-524E**. Only one rotor pole piece path portion can directly align with a stator pole piece face at a given time. By alternately energising the control coils of each of the stator pole piece paths, rotary motion of the rotor may be achieved.

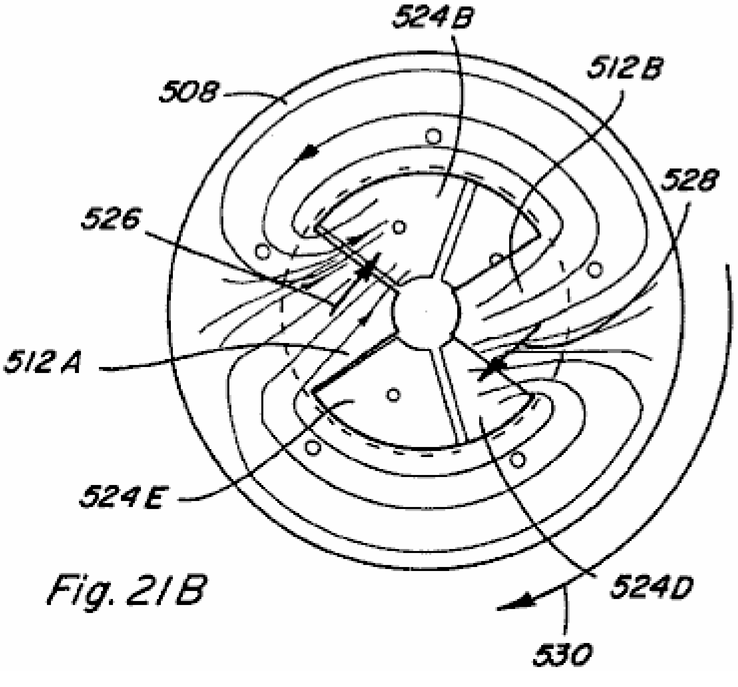

Fig. 21B

In particular, referring to **Figs.21B-21D**, an energising sequence which results in such rotary motion is described. In **Fig.21B**, control coils **522A** and **522C** are energised in a permanent magnet flux opposing manner. Permanent magnet magnetic flux travelling along rotor pole piece path portion **512A** tends to traverse to stator pole piece face **524B** causing a magnetic coupling force indicated by arrow **526**. Likewise, permanent magnet flux travelling along rotor pole piece path portion **512B** tends to traverse to stator pole piece face **524D** causing a magnetic coupling force indicated by arrow **528**. The result is rotation of rotor pole piece **508** in a clockwise direction as indicated by arrow **530**.

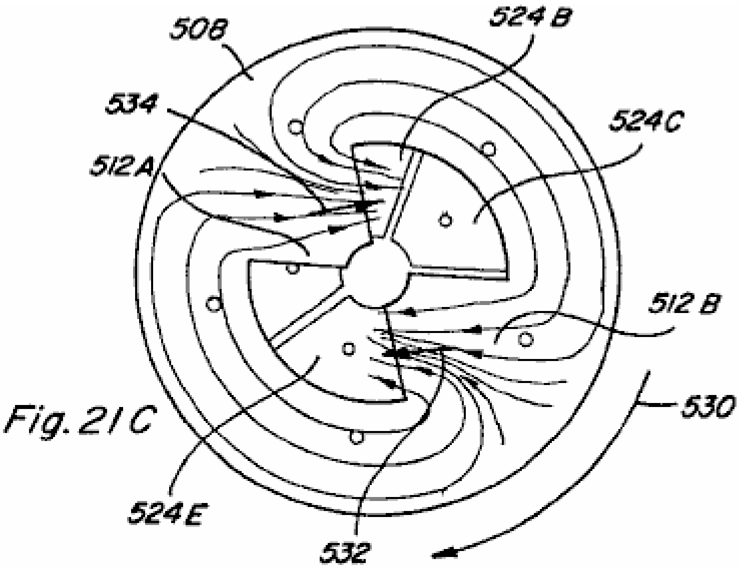

Fig. 21 C

Referring to **Fig.21C**, just after rotor pole piece path portion **512B** is no longer aligned with stator pole piece face **524D**, control coil **522C** is de-energised and control coil **522D** is energised in an opposing manner such that the permanent magnet flux travelling along rotor pole piece path **512B** tends to traverse to stator pole piece face **524E** resulting in magnetic coupling force indicated by arrow **532**. Control coil **522A** remains energised such that a magnetic coupling force indicated by arrow **534** results. Accordingly, clockwise rotation of rotor pole piece **508** is continued.

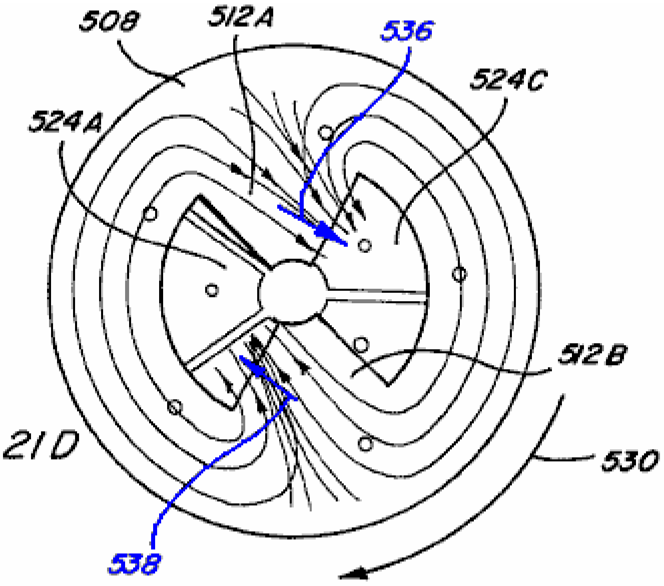

Fig. 21 D

In **Fig.21D**, just after rotor pole piece path portion **512A** is no longer aligned with stator pole piece face **524B**, control coil **522A** is de-energised and control coil **522B** is energised in a permanent magnet magnetic flux opposing manner such that the permanent magnet magnetic flux travelling along rotor pole piece path **512A** tends to traverse to stator pole piece face **524C** such that a magnetic coupling force indicated by arrow **536** results. Control coil **522D** remains energised such that a magnetic coupling force indicated by arrow **538** results, and clockwise rotation of rotor pole piece **508** is continued.

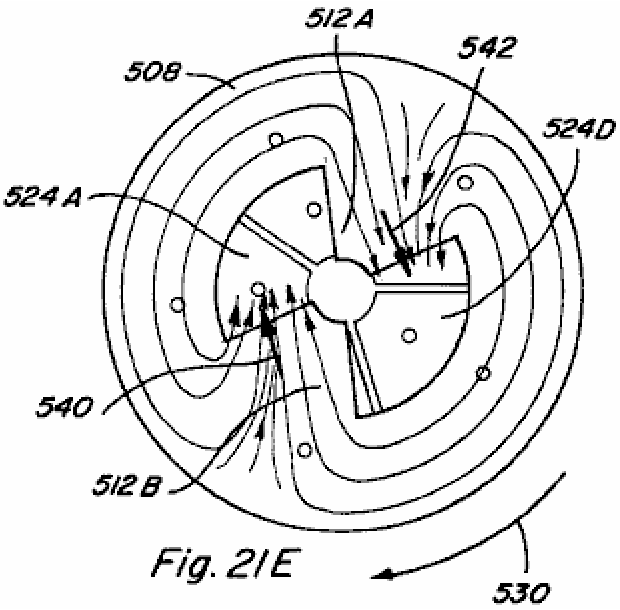

Fig. 21E

As shown in **Fig.21E**, just after rotor pole piece path portion **512B** is no longer aligned with stator pole piece face **524E**, control coil **522D** is de-energised and control coil **522E** is energised in a permanent magnet magnetic flux opposing manner such that the permanent magnet magnetic flux travelling along rotor pole piece path **512B** tends to traverse to stator pole piece face **524A** such that a magnetic coupling force indicated by arrow **540** results. Control coil **522B** remains energised such that a magnetic coupling force indicated by arrow **542** results, and clockwise rotation of rotor pole piece **508** is continued.

Thus, by alternating energising and de-energising control coils **522A-522E**, in a predetermined timed sequence based upon rotation of the rotor assembly, continued rotation movement of rotor pole piece **508** may be achieved. Such an energisation/de-energisation scheme can be achieved utilising circuitry common in the art, such as the control circuitry described in Applicant's U.S. Pat. Nos. 5,463,263 and 5,455,474, as well as various of the circuit configurations described below.

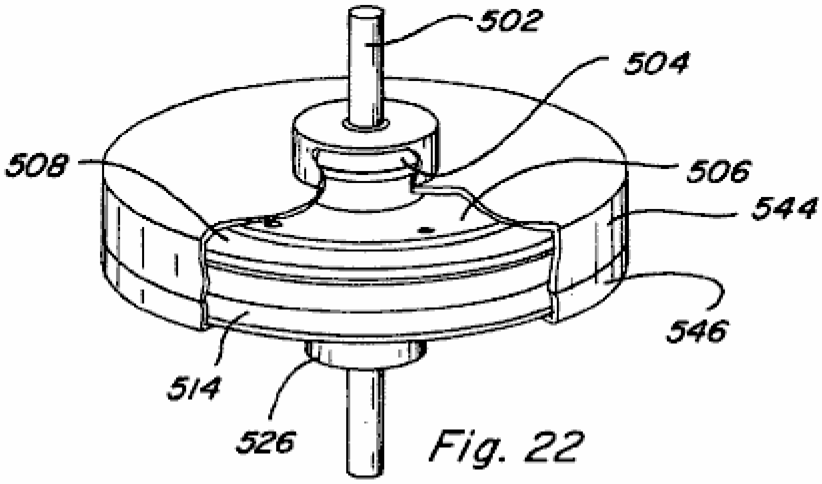

Fig. 22

Referring now to **Fig.22**, an assembled view of rotary motor **500** is shown including a housing or cover formed by an upper housing member **544** and a lower housing member **546**, with portions of each housing member cut away to expose motor structure described above. It is recognised that such housing members **544** and **546** should be constructed from a non-magnetic material, and likewise that motor shaft **502** and bearings **504**, **526** should be constructed from a non-magnetic material.

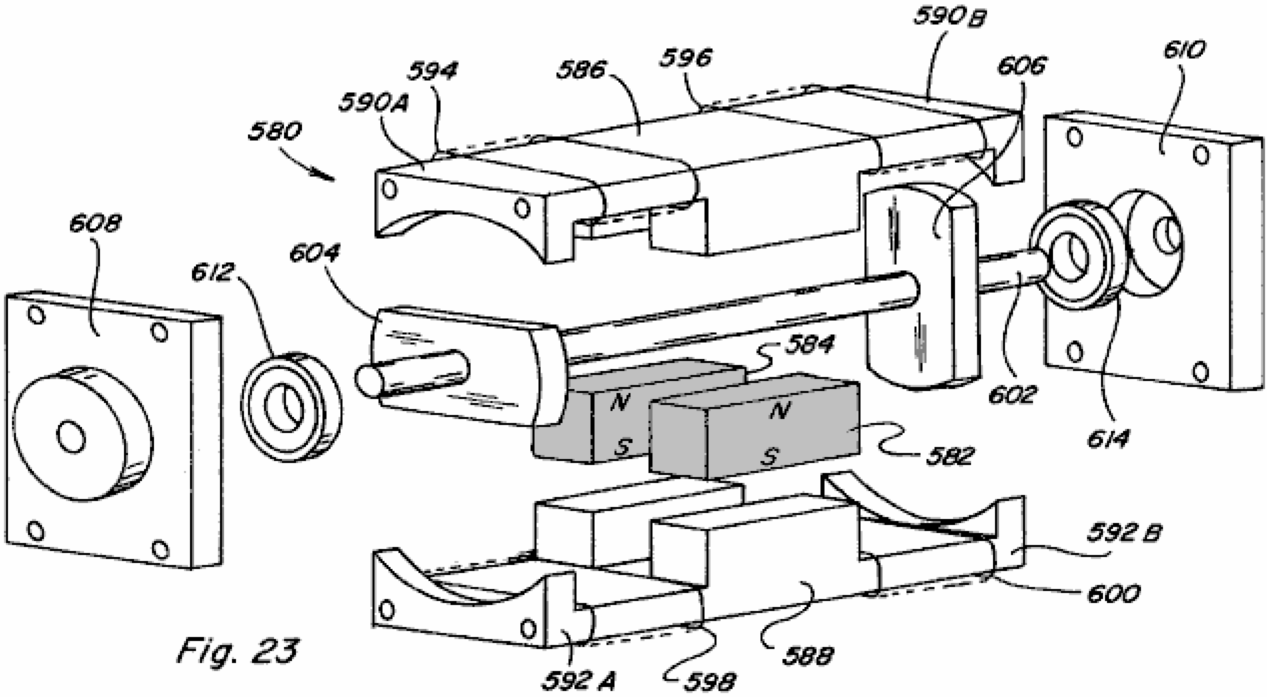

Fig. 23

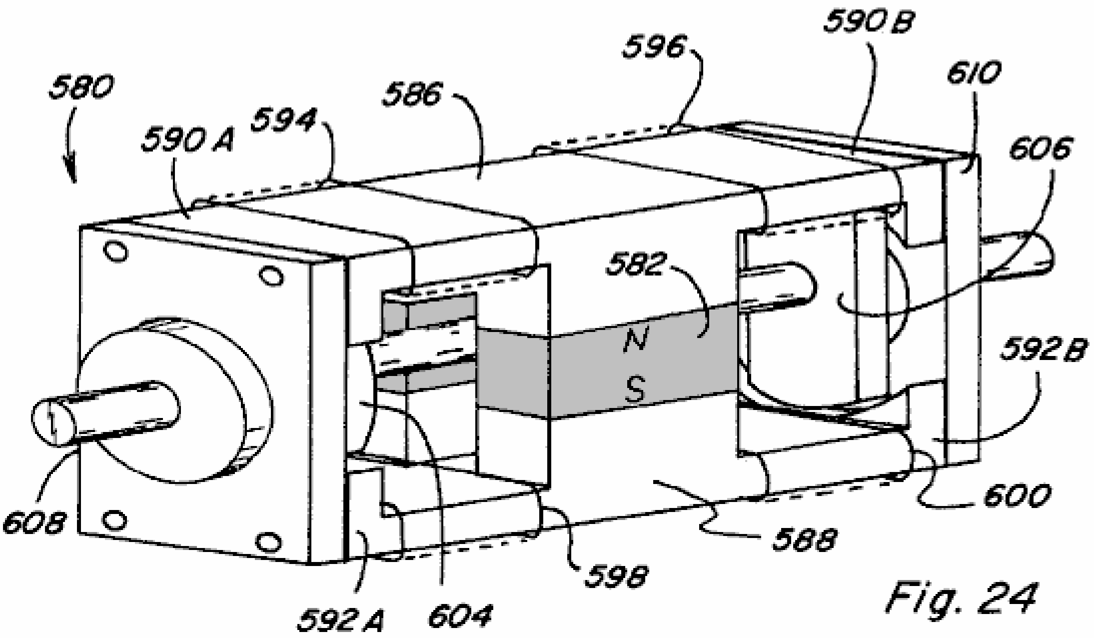

Fig. 24

In another embodiment, a rotary motion device or motor **580** in accordance with the present invention is shown in an exploded perspective view in **Fig.23** and in an assembled perspective view in **Fig.24**. Two spaced permanent magnets **582** and **584** are positioned between stator pole pieces **586** and **588**. Stator pole piece **586** includes two path portions **590A** and **590B** extending away from permanent magnets **582**, **584** in opposite directions. Likewise, stator pole piece **588** includes two path portions **592A** and **592B** extending away from permanent magnets **582**, **584** in opposite directions and which can be aligned with stator pole piece path portions **590A** and **590B**. Control coils **594**, **596**, **598**, and **600** are each positioned along a stator pole piece path portion as shown. A non-magnetic shaft **602** includes a pair of matching elongated rotor members **604** and **606**, formed of magnetic material, mounted at spaced locations on the shaft and being set at an angle to each other, shaft **602** passing between spaced permanent magnets **582** and **584**. Two end cap members **608** and **610**, made from non-magnetic material, are attached to the ends of stator pole pieces **586** and **588** and are configured for receiving shaft **602** and respective bearings **612** and **614**.

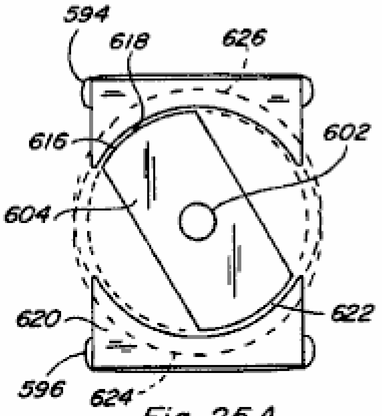

Fig. 25A

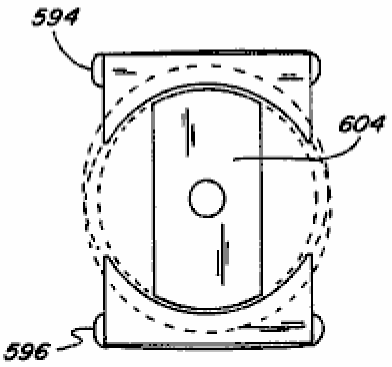

Fig. 25B

The ends of the stator pole pieces **506** and **508** are configured for a given desired coupling relationship with rotor members **604** and **606**. For example, as shown in the exemplary end views of **Fig.25A** and **Fig.25B**, with end cap **608** removed, the end of stator pole piece **586** may include an curved portion **616** which is configured to create a variable-reluctance air gap **618** with elongated rotor member **604**. The end of stator pole piece **588** includes an curved portion **620** which is also configured to create a variable-reluctance air gap **622** with rotor member **604.**

In particular, portion **618** includes a circumferential curvature which has a centre point offset below the axis of rotation of shaft **602** and rotor member **604** as indicated by circle **624** shown in shadow. Similarly, portion **620** includes a circumferential radius of curvature which has a centre point offset above the axis of rotation of shaft **602** and rotor member **604**. When magnetic flux is passing along the path which includes a given end of the assembly, maximum coupling between the rotor member and stator pole pieces occurs when the rotor is positioned as shown in **Fig.25B**. Accordingly, the illustrated rotor member and stator pole piece configurations of themselves do not provide any skewing to the direction of rotation of the rotor assembly.

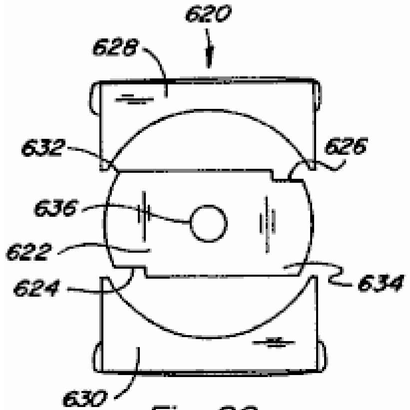

Fig. 26

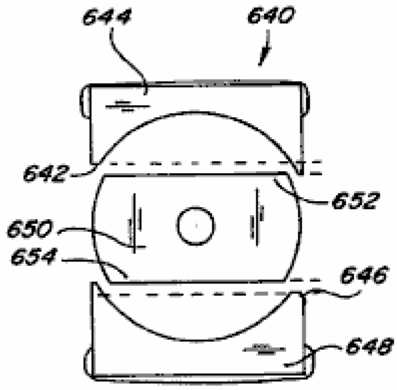

Fig. 27

In this regard, various configurations for the rotor and ends of the stator pole piece are shown in the end views of **Figs.26-28**, which configurations provide skewing the direction of rotation. In particular, in device **620** of **Fig.26** a rotor member **622** having notches **624** and **626**, which notches provide for greater magnetic coupling with the stator pole pieces **628** and **630** at corners **632** and **634** such that rotation is skewed in the clockwise direction. If notches were instead located at corners **632** and **634**, skewed rotation in the counterclockwise direction would be the result. In device **620** such counterclockwise rotation could also be achieved by removing rotor **622** from shaft **636**, flipping it end to end, and replacing it on shaft **636**.

In the device **640** of **Fig.27**, a portion **642** of the curved end portion of stator pole piece **644** is removed and a portion **646** of the curved end portion of stator pole piece **648** is removed. This configuration results in greater magnetic coupling between rotor member **650** and stator pole piece **644** at corner **652**, and greater magnetic coupling between rotor member **650** and stator pole piece **648** at corner **654**, such that rotation is skewed in the counterclockwise direction. Clockwise rotation could be achieved by instead modifying the opposite side of stator pole pieces **644** and **648**.

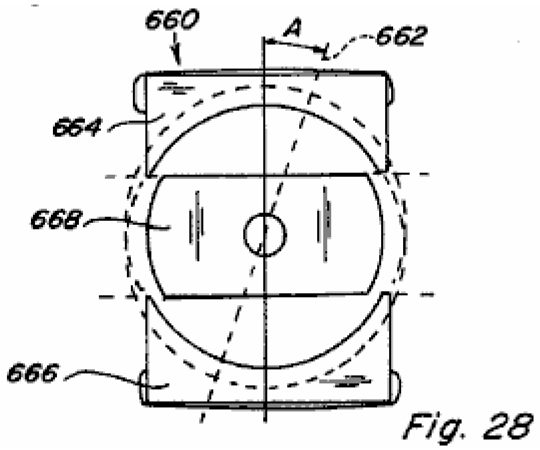

Fig. 28

Fig.28 depicts an end view of a device **660** in which the axis **662** of the curved end portion of upper stator pole piece **664** and lower stator pole piece **666** is placed at an angle **A** as shown. This configuration creates an unequal variable-reluctance air gap where opposite corners of rotor member **668** are closer to stator pole pieces **664** and **666**. Further, the angle at which maximum magnetic coupling between rotor member **668** and stator pole pieces **664** and **666** occurs is retarded by angle **A**. Rotation would be in the counterclockwise direction for the illustrated configuration.

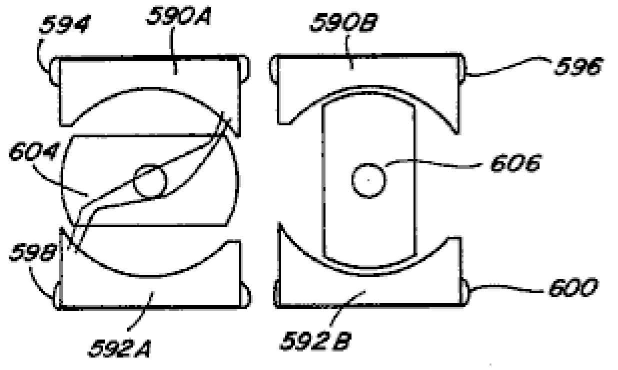

Fig. 29A

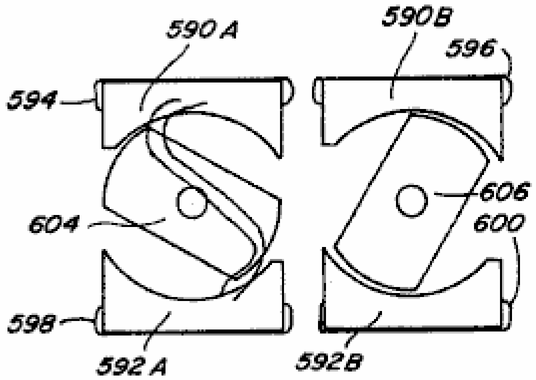

Fig. 29B

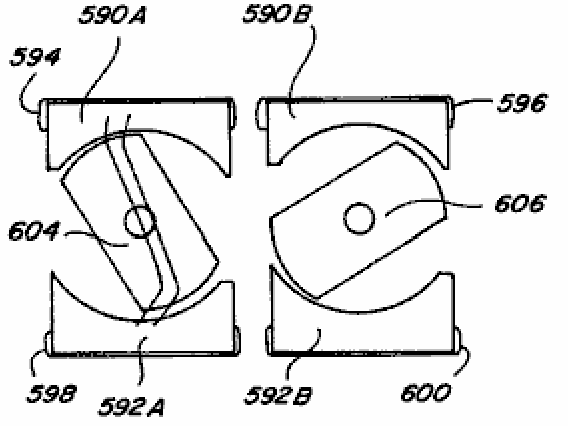

Fig.29C

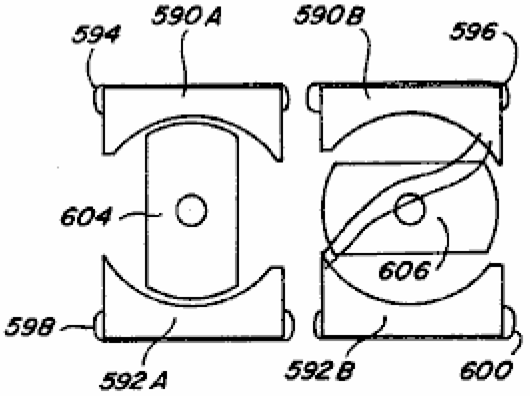

Fig.29D

Referring again to motor **580** of **Figs.23-25**, rotary motion of such device is depicted in the end views of **Figs.29A-29D**. In each end view the end cap has been removed to show rotation of the rotor members and in each of **Figs.29A-29D** an end view depicting rotor member **604** and an end view depicting rotor member **606** are shown side-by-side. In **Fig.29A**, rotor member **604** is defined as being at zero degrees and rotor member **606** is defined as being at ninety degrees. Control coils **594**, **598** are energised in a permanent magnet magnetic flux aiding manner such that no magnetic flux passes through stator pole piece path portions **590B** and **592B**. This allows rotor member **606** to move out of its ninety degree position and the magnetic coupling between rotor member **604** and stator pole piece path portions **590A** and **592A** will cause rotation to the position shown in **Fig.29B** and then **Fig.29C**. When rotor member **604** reaches the ninety degree position shown in **Fig.29D** control coils **594**, **598** are de-energised and control coils **596**, **600** are energised in a permanent magnet magnetic flux aiding manner causing rotation to continue due to the magnetic coupling between rotor member **606** and stator pole piece path portions **590B** and **592B**. Thus, by alternately energising the control coils of each path with every ninety degree rotation of rotor members **604** and **606**, continuous rotary motion is achieved.

The initial direction of rotation can be controlled by the circuit means used to energise control coils **594**, **598** and **596**, **600**, which circuit means includes circuitry for detecting the angular position of the rotor members. In particular, if rotor members **604** and **606** are at rest in the position shown in **Fig.29A**, and coils **594**, **598** are energised in an aiding manner, rotation may be clockwise or counterclockwise. If the desired direction is clockwise but upon energisation of coils **594**, **598** the rotor members begin to move counterclockwise, the detection circuitry will immediately de-energise coils **594**, **598** and energise coils **596**, **600** so that the clockwise direction is achieved.

Further, bypasses around permanent magnets **582** and **584** could be provided in rotary motion device **580**, such as those shown in **Fig.12**, and rotor members **604** and **606** could be formed by permanent magnets so as to take advantage of energising the control coils in an exceeding manner.

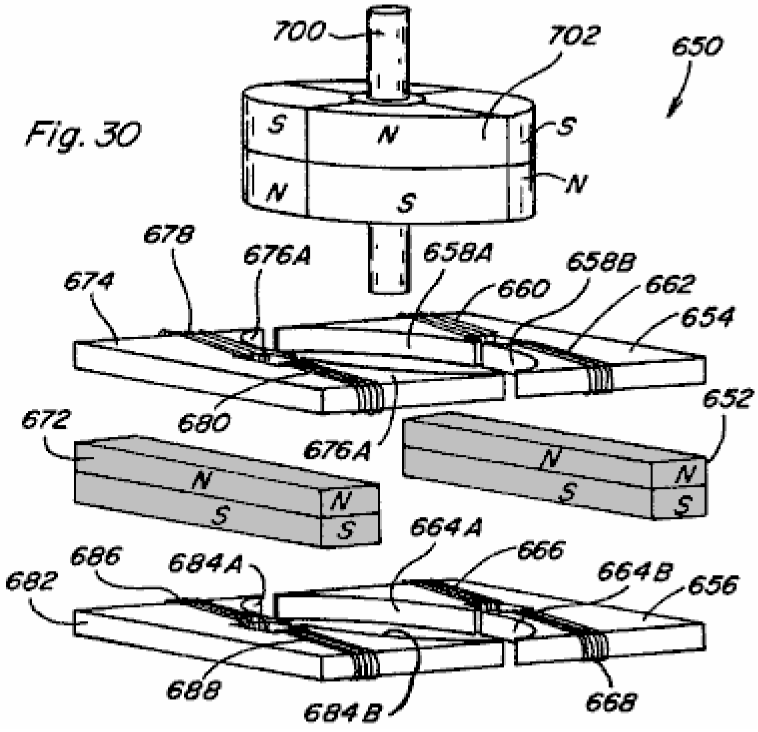

Fig. 30

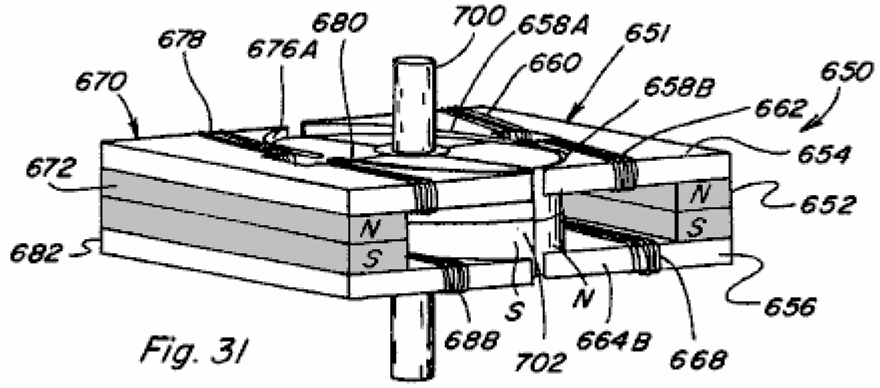

Fig. 31

A third embodiment of a rotary motion device or motor **650** is shown in the exploded partial perspective view of **Fig.30** and in the assembled partial perspective view of **Fig.31**. In motor **650** the stator assembly includes a control component **651** including a permanent magnet **652** having a stator pole piece **654** positioned adjacent to one pole face of the magnet and a stator pole piece **656** positioned adjacent to the opposite pole face. Stator pole piece **654** includes a path portion **658A** extending to one side of permanent magnet **652** and a path portion **658B** extending to the one side thereof and spaced from first path portion **658A**. Control coils **660** and **662** are positioned along respective stator pole piece path portions **658A** and **658B**.

In the same way, stator pole piece **656** includes path portions **664A** and **664B** which extend in a similar manner from it so as to be aligned with stator path portions **658A** and **658B** respectively. Control coils **666** and **668** are positioned along respective stator pole piece path portions **664A** and **664B**. Positioned opposite, and facing control component **651**, is a similar control component **670** including permanent magnet **672** stator pole piece **674** with path portions **676A** and **676B** having the control coils **678** and **680**, and stator pole piece **682** with path portions **684A** and **684B** having their control coils **686** and **688**. The end of each of the pole piece path portions **658A, 658B, 664A, 664B, 676A, 676B, 684A**, and **684B** is of a generally curved configuration.

A rotor assembly of motor **650** includes a non-magnetic shaft **700** having a permanent magnet rotor member **702** mounted on it and which rotates with it. Permanent magnet rotor member **702** is generally ring-shaped and segmented to include distinct north and south pole faces which reverse about every ninety degrees around them. When assembled, the top and bottom surfaces of permanent magnet rotor member **702** align with pole pieces **654, 656, 674**, and **682** of the stator assembly and are preferably configured so that there is a minimal gap between the outer surface of permanent magnet rotor member **702** and the curved surfaces of the pole piece path portions.

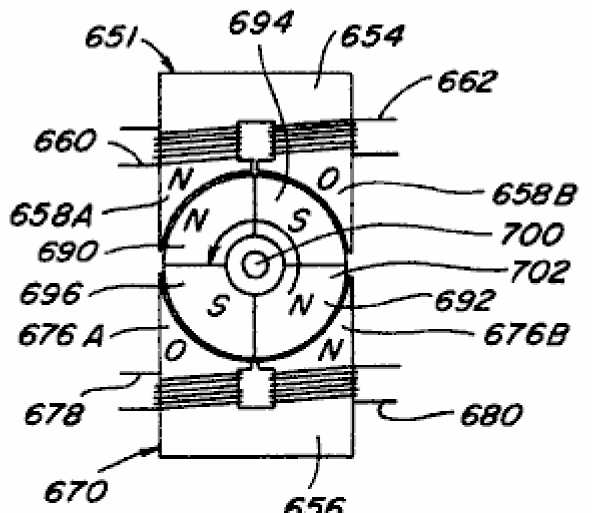

Fig.32A

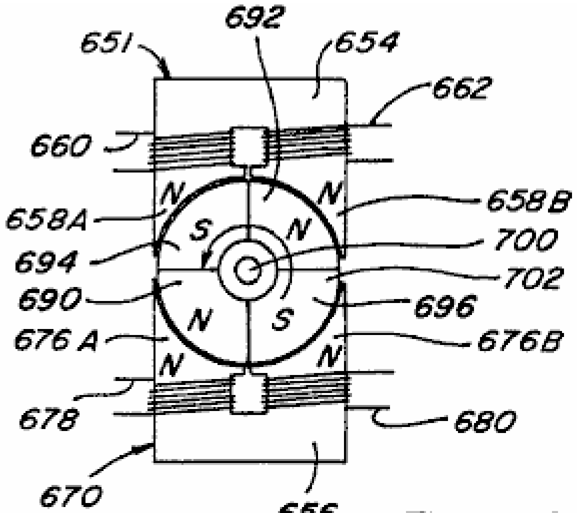

Fig. 32B

Rotation of device **650** can be achieved by controlled, timed energising and de-energising of control coils **660, 662, 666, 668, 678, 680, 686**, and **688**. Exemplary rotation is demonstrated with reference to the top views of **Figs.32A-32B** which depict counterclockwise rotation of permanent magnet rotor member **702** through one-hundred and eighty degrees. In **Fig.32A** stator pole piece path portion **658A** of component **651** is active and stator pole piece path portion **658B** is not active, which may be achieved by energising control coil **660** in a permanent magnet magnetic flux aiding manner or by energising control coil **662** in a permanent magnet magnetic flux opposing manner. Stator pole piece path portion **676B** of component **670** is active and stator pole piece path portion **676A** is not active, which may be achieved by energising control coil **680** in a permanent magnet magnetic flux aiding manner or by energising control coil **678** in a permanent magnet magnetic flux opposing manner.

Thus, portions **690** and **692** of permanent magnet rotor member **702**, which both have a north magnetic polarity, will be repelled by the north polarity of stator pole piece path portions **658A** and **676B** aligned with it. Portions **694** and **696** of permanent magnet rotor member **702**, both of which have a south magnetic polarity, will be attracted to the active path portions **658A** and **676B**. At the instant that rotor member portion **694** becomes aligned with stator pole piece path portion **658A**, as shown in **Fig.32B**, all coils are de-energised such that all pole piece path portions will be active as shown. Pole piece path portions **658B** and **676A** are then kept active while pole piece path portions **658A** and **676B** are made inactive. This is achieved by energising control coils **662** and **678** in a permanent magnet magnetic flux aiding manner or by energising control coils **660** and **680** in a permanent magnet magnetic flux opposing manner. Rotor member portions **690** and **692** will again be repelled by the north polarity of path portions **658B** and **676A** aligned with it so that rotation of permanent magnet rotor **702** is continued.

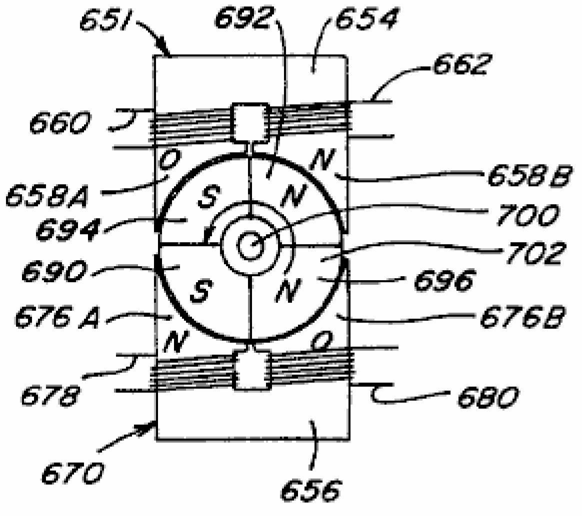

Fig. 32C

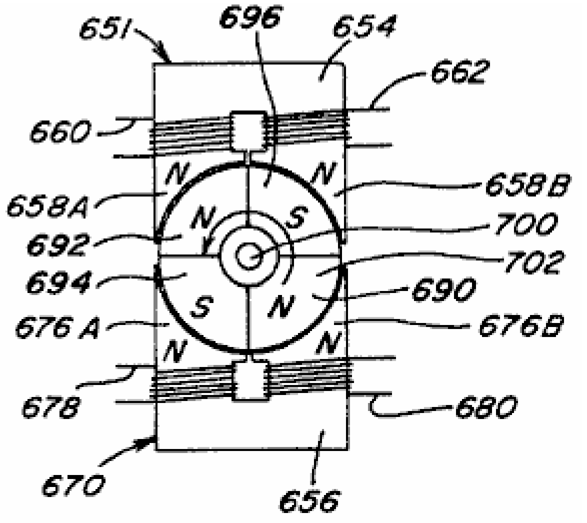

Fig. 32 D

In **Fig.32D** all coils are shown de-energised when rotor portion **692** aligns with pole piece path portion **658A**. By continuing this timed sequence of energisation and de-energisation of the control coils, continued rotary movement is achieved. As explained above, the initial direction of rotation can be controlled by circuit means which detects the initial direction of permanent magnet rotor **702** and immediately alters the coil energisation scheme if the initial direction is incorrect.

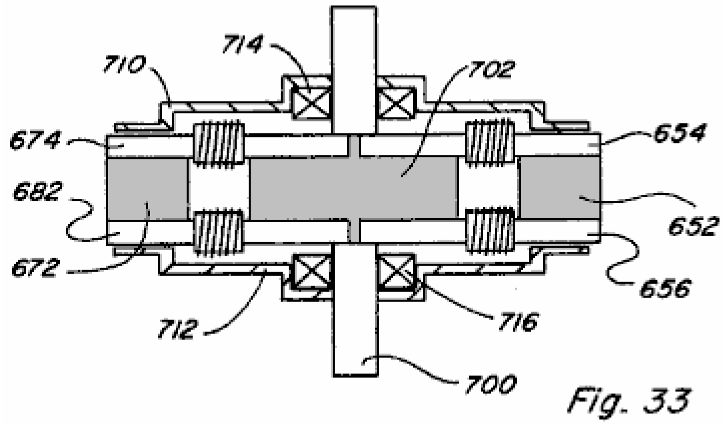

Fig. 33

A side view of assembled motor **650** is shown in **Fig.33** and includes an upper housing or enclosure portion **710**, a bottom housing portion **712**, upper bearing **714**, and a lower bearing **716**.

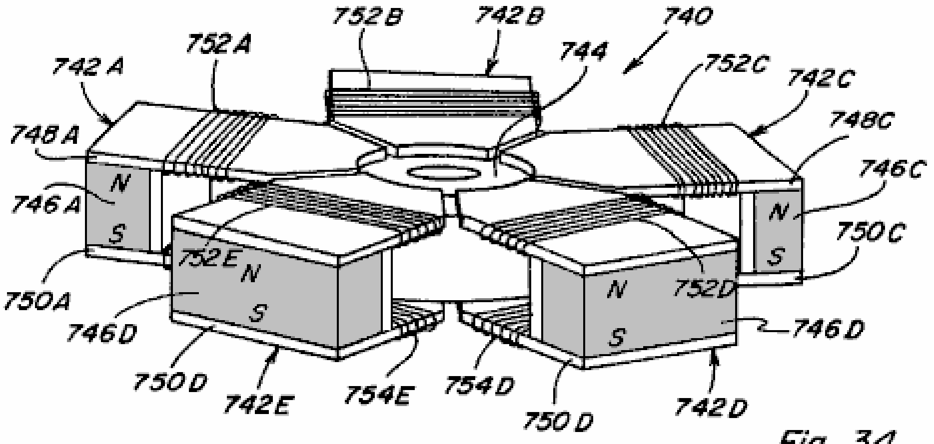

Fig. 34

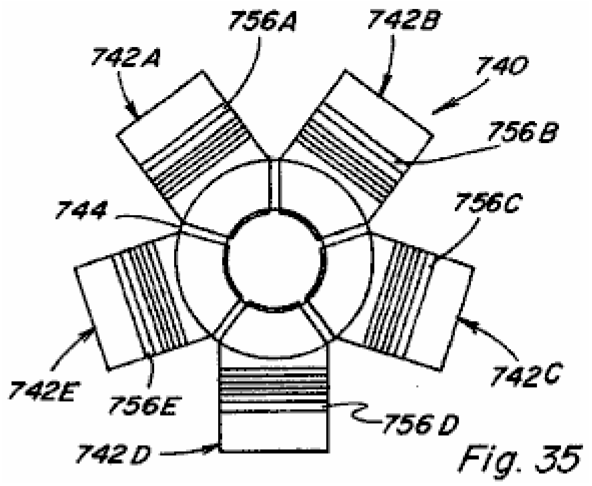

Fig. 35

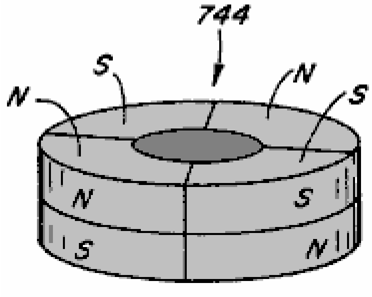

Fig. 36

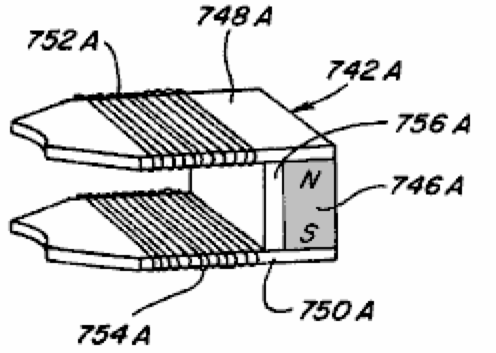

Fig. 37

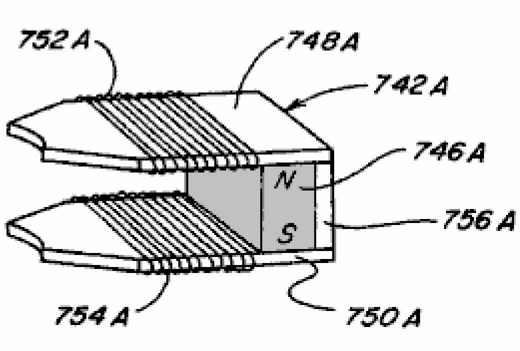

Fig. 38

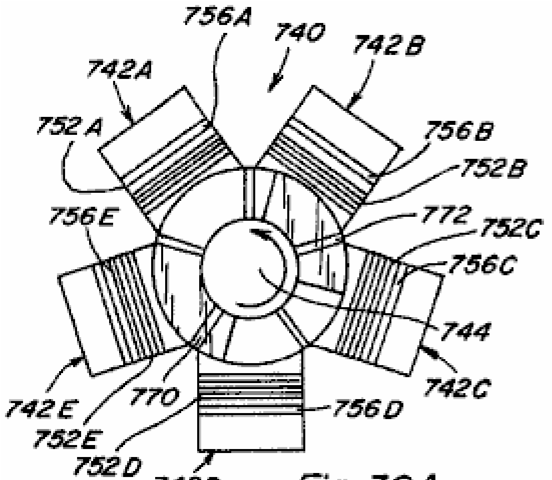

Fig. 39A

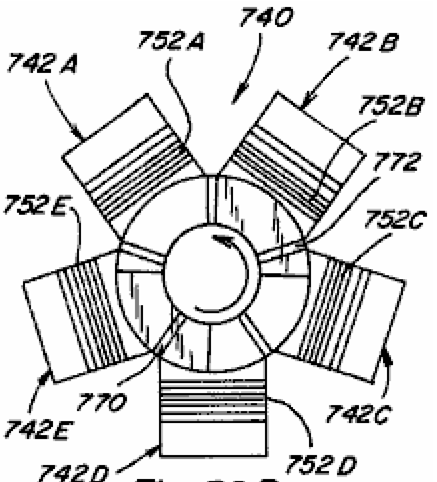

Fig. 39B

A fourth embodiment of a rotary motion device or motor **740** is illustrated in **Figs.34-39**. Motor **740** includes five stator control components **742A-742E** positioned around a ring shaped permanent magnet rotor member **744** (**Fig.36**). As shown with reference to component **742A** in **Fig.37**, each stator component **742A** includes a permanent magnet **746A** with an upper pole piece **748A** positioned adjacent to one pole face and a lower pole piece **750A** positioned adjacent to the opposite pole face. Control coils **752A**, **754A** are positioned along respective pole pieces **748A**, **750A**. A bypass **756A** extends from pole piece **748A** to pole piece **750A** and is positioned between permanent magnet **746A** and control coils **752A**, **754A**. Alternatively, bypass **756A** could be provided on the opposite side of permanent magnet **746A** as shown in **Fig.38**. Although not shown, it is anticipated that permanent magnet rotor member **744** would be mounted on an axis for rotation with it and that a motor housing or enclosure could be provided, such as shown in relation to motor **650** of **Fig.33**.

Referring to the top views of **Figs.39A-39D**, rotary motion of rotor member **744** is depicted by the sequence of views. Regions **770** and **772** in **Figs.39A-39D** represent the magnetic north regions of the top of permanent magnet rotor **744**. In **Fig.39A** control coils **752E** and **752C** are energised in a permanent magnet aiding and exceeding manner such that regions **770** and **772** of permanent magnet rotor **744** are repulsed by components **742E** and **742C** while permanent magnet motor regions **774** and **776** are attracted by components **742E** and **742C**. The resultant coupling forces act to move permanent magnet rotor in a counterclockwise direction to the location shown in **Fig.39B**. Just after permanent magnet rotor region **772** passes the point shown in **Fig.39C**, control coil **752B** is energised in a permanent magnet aiding and exceeding manner, while control coils **752E** and **752C** also remain energised, and counterclockwise rotation of permanent magnet rotor **744** is continued. Just after permanent magnet rotor region **772** passes by control component **742C** control coil **752C** is de-energised, while control coils **752E** and **752B** remain energised, so as to continue counterclockwise rotation. Then, just after permanent magnet rotor region **770** reaches the location shown in **Fig.39D** control coil **752D** is energised in a permanent magnet flux aiding and exceeding manner, while coils **752E** and **752B** remain energised, so as to continue counterclockwise rotation. Thus, as in the other embodiments, repeated and timed energisation and de-energisation of the control coils produces the desired rotational movement.

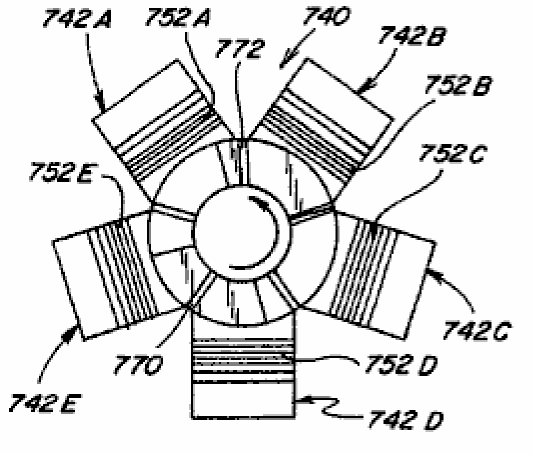

Fig. 39 C

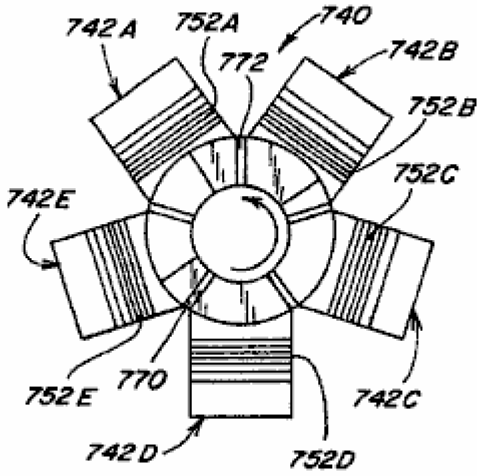

Fig. 39 D

In terms of controlling the energisation of coils in the devices described above, various electronic control circuit/switching means and electromechanical control circuit/switching machines are depicted in **Figs.40-44**. In circuit **800** of **Fig.40** a given coil **802** is placed in series between an electrical energy source **804** and a power MOSFET **806**. An LED **808** is connected to electrical energy source **804** through resistor **810** and is positioned to impinge upon a phototransistor **812** which is connected in series with resistor **814**. A control input of MOSFET **806** is connected between phototransistor **812** and resistor. Accordingly, when LED **808** activates phototransistor **812** the voltage drop across resistor **814** activates, or turns ON, MOSFET **806** and coil **802** is energised. Timed energisation of coil **802** is provided by mounting an interrupter **816**, such as shown in **Fig.42**, to the shaft **816** of the motor device to be controlled, such that as interrupter **814** rotates with shaft **816** coil **802** is alternately energised and de-energised. In a device with a plurality of coils a corresponding plurality of LED/photoresistor pairs may be provided.

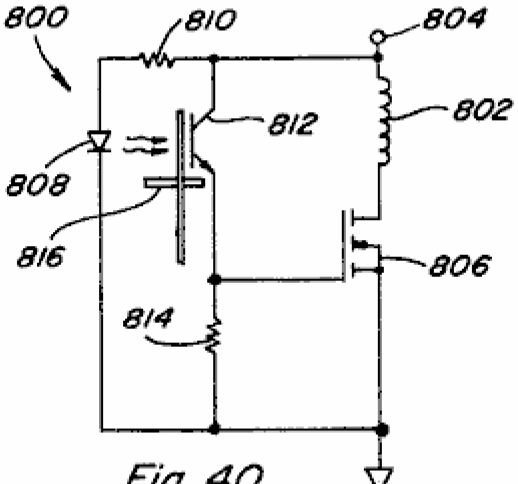

Fig. 40

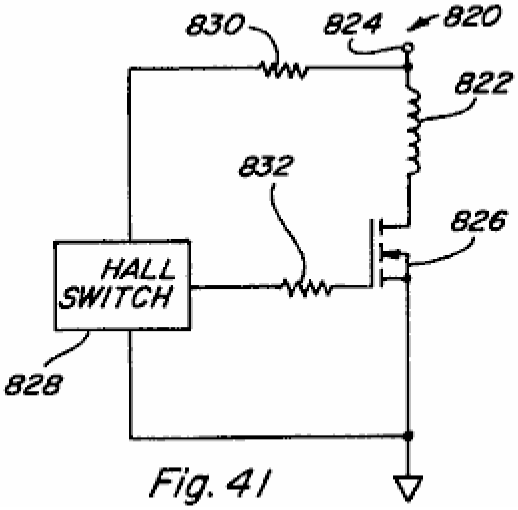

Fig. 41

In circuit **820** of **Fig.41** a coil **822** is positioned between electrical energy source **824** and power MOSFET **826**. A hall switch **828** is connected in series with resistor **830**. Hall switch **828** is also connected to the control input of MOSFET **826** through resistor **832**. In a given device hall switch **828** would be positioned to react to a change in magnetic flux so as to control the ON/OFF switching of MOSFET **826**, and thus the alternate energisation and de-energisation of coil **822**.

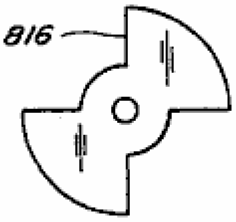

Fig. 42

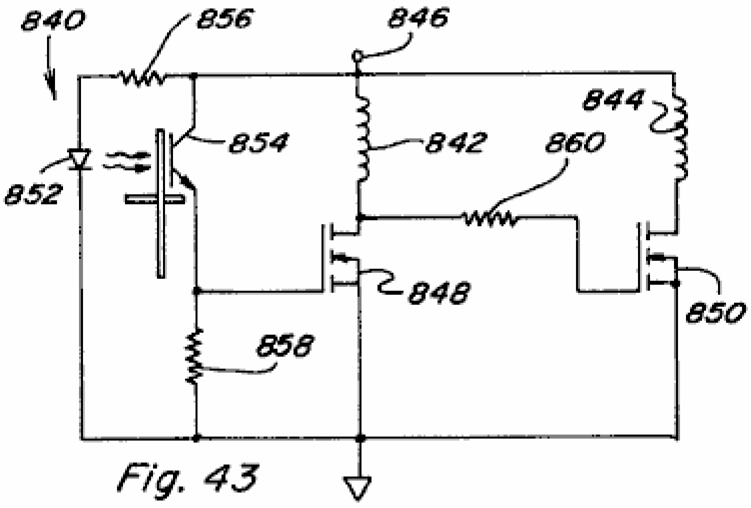

Fig. 43

In **Fig.43** a circuit **840** for controlling two coils in an opposite manner is provided such that when coil **842** is energised coil **844** is de-energised, and such that when coil **842** is de-energised coil **844** is energised. Both coils **842** and **844** are connected in series between electrical energy source **846** and respective power MOSFETs **848** and **850**. An LED **852** and phototransistor **854** arrangement is provided, LED connected in series with resistor **856** and phototransistor connected in series with resistor **858**. When LED **852** turns phototransistor **854** ON the voltage drop across resistor **858** turns MOSFET **848** ON and coil **842** is energised. At that time the voltage applied at the control input of MOSFET **850** will be low and therefore MOSFET **850** will be OFF and coil **844** will be de-energised. When interrupter **814** blocks LED 852, phototransistor **854** is turned OFF and MOSFET **848** is likewise turned OFF. The control input of MOSFET **850** is therefore pulled high through resistor **860** and MOSFET **850** is turned ON such that coil **844** is energised.

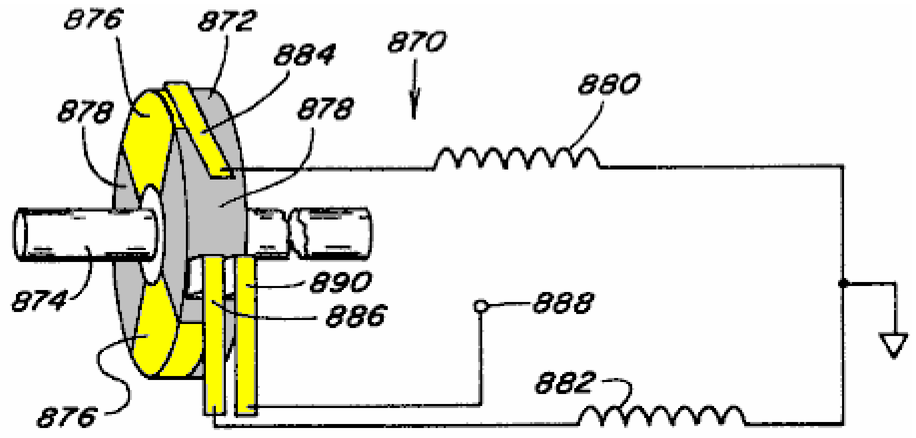

Fig. 44

In **Fig.44** a system **870** including member **872** mounted on rotating shaft **874** is provided, with the left side of member **872** being alternately conductive at **876** and non-conductive at **878**. Coils **880** and **882** are connected to respective brushes **884** and **886** which are positioned to contact member **872** during each rotation of the shaft. Member **872** is connected through brush **890** to power supply **888**. Thus, coils **880** and **882** will alternately be energised and de-energised as the respective brushes thereof contact the conductive and non-conductive portions of member **872**.

Any of such circuit means, variations thereof, or other circuit means may be used to provide the timed energisation of the control coils in the various embodiments of the present invention.

From the preceding description of the illustrated embodiments, it is evident that the objects of the invention are attained. Although the invention has been described and illustrated in detail, it is to be clearly understood that the same is intended by way of illustration and example only and is not to be taken by way of limitation.

For example, although the magnetic flux control techniques of the present invention have been discussed as applicable mainly to various motive applications, such magnetic flux control techniques are also useful in static applications.

Power Conversion

Referring to **Figs.45A-45C** there is shown the permanent magnet device **900** of **Figs.45A-45C** which has two magnetic flux paths provided by rectangular pole piece **902** which includes upper portion **904** and lower portion **906** each positioned against a respective pole face of permanent magnet **910**. Unlike the device of **Figs.7-9**, fall away armatures are not provided. Instead, fixed armatures in the form of integral pole piece portions **912** and **914** extend from upper portion **904** to lower portion **906** completing the two flux paths in a permanent manner. Control coils **916**, **918** are provided along one flux path and control coils **920**, **922** are provided along the other flux path, such control coils acting as primary windings in device **900**. One coil **924** is positioned around pole piece portion **912** and another coil **926** is positioned around pole piece portion **914**, such coils **924**, **926** acting as secondary windings in device **900**.

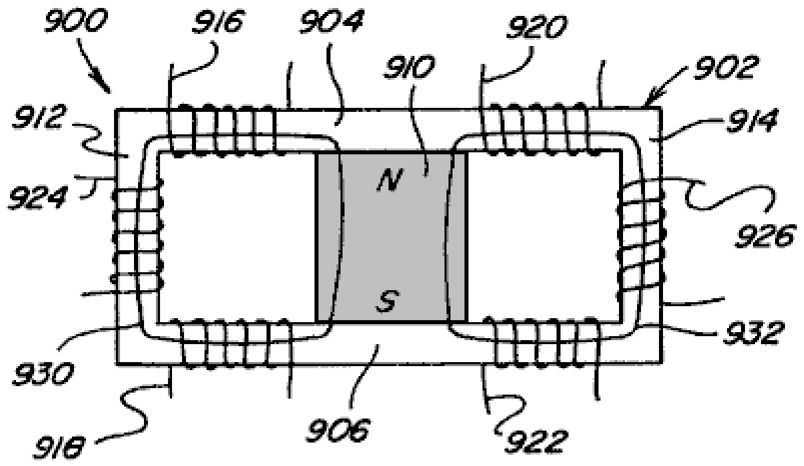

Fig. 45A

In **Fig.45A** no coils are energised and the permanent magnet magnetic flux splits evenly between paths **930** and **932**, coupling with both coil **924** and coil **926**.

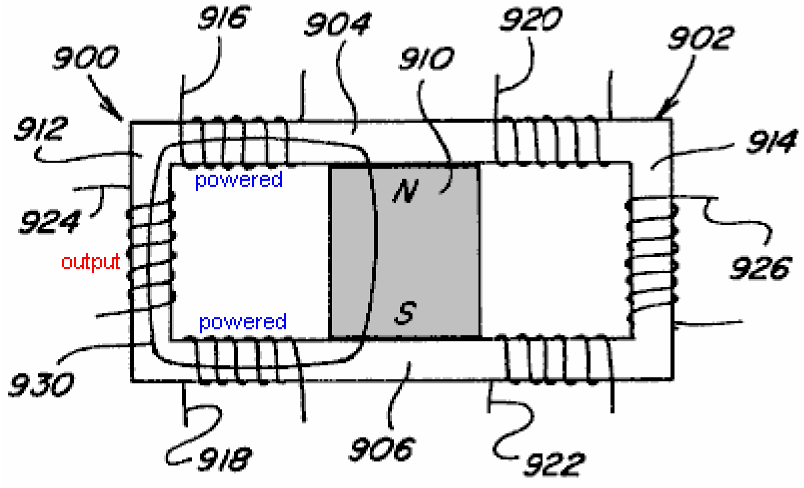

Fig. 45B

In **Fig.45B** coils **916**, **918** are energised in a permanent magnet magnetic flux aiding manner so as to couple with all the magnetic flux of permanent magnet **910**. All magnetic flux flows along path **930** as shown and thus couples with coil **924**.

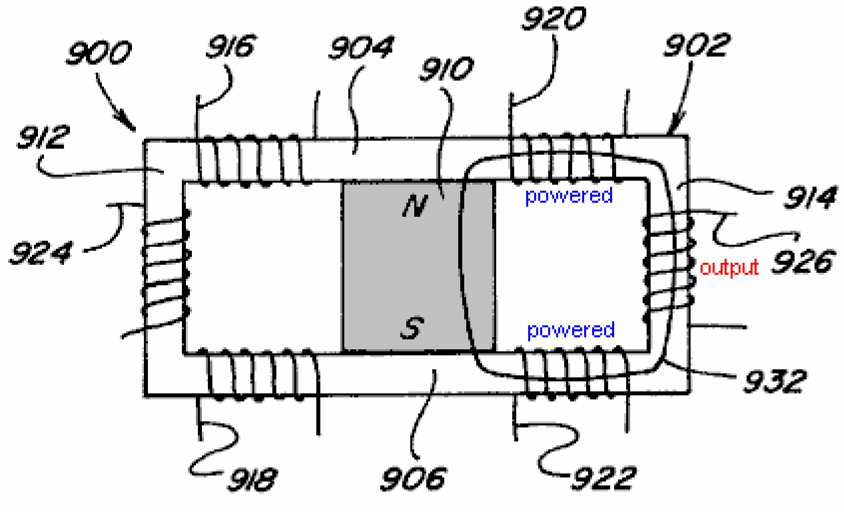

Fig. 45C

In **Fig.45C** coils **920**, **922** are energised in a permanent magnet magnetic flux aiding manner such that all magnetic flux traverses path **932** and couples with coil **926**. By continuously alternately energising and de-energising coils **916**, **918** and **920**, **922** in such a manner energy conversion is achieved due to the coupling with coils **924** and **926**. The magnetic flux in the integral pole piece portions **912** and **914**, and thus the flux coupling with respective coils **924** and **926**, varies by a factor of twice the amount of magnetic flux generated by energising coils **916**, **918** and **920**, **922**.

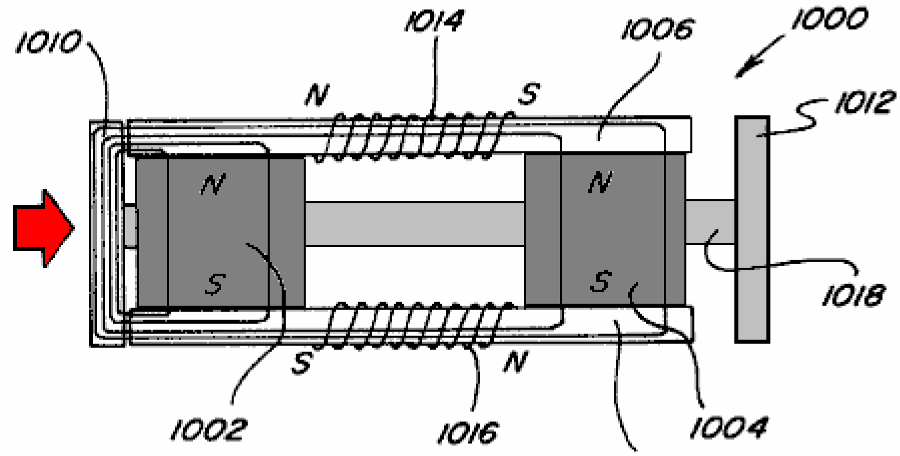

Fig. 47

The construction shown in **Fig.45A** and **Fig.45X** are similar to the construction shown in **Fig.7** and **Fig.47**. The difference in both cases relates to replacing the two flux paths and armatures with one continues flux path. The arrangement in **Fig.7** has one permanent magnet and four coils and the arrangement in **Fig.47** has two permanent magnets and two coils. Although the physical aspects of the two arrangements and the details of the flux control vary, the control method for varying the permanent magnets flux are similar and will be described simultaneously and only differences will be pointed out.

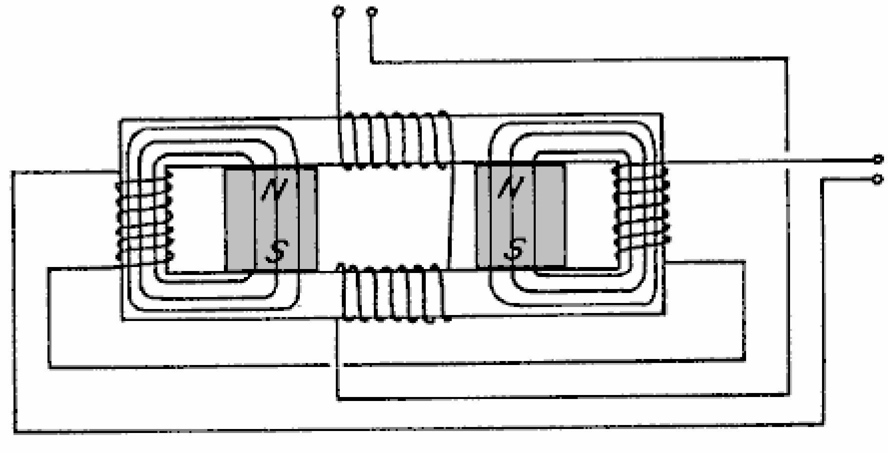

Fig. 45 X

With continuous flux paths the static flux from the permanent magnet or magnets is useless. However, if the static flux of the permanent magnet confined to the flux paths were modified to be time varying it would have utility for electromagnetic induction devices for power conversion like transformers and power inverters. However, the same basic method for controlling the flux of a permanent magnet to provide linear and rotary motion can also be applied to time varying the static flux from the permanent magnet. The construction shown in **Fig.45X** utilises four control coils and a single permanent magnet while the construction shown in **Fig.45A** uses two control coils and two permanent magnets. The flux that would normally be supplied by a primary winding is supplied by the static flux of the permanent magnet or magnets and the control coils convert this static flux into a time varying flux in a novel way. Both arrangements use two secondary coils, the secondary coils are placed in the region of the continuous flux path that would be occupied by an armature or rotor in the linear or rotary arrangements. The regions of the flux paths that perform work are the same in all cases.

In all cases the control coils can either be wired in series or parallel and the secondary coils can be either wound in series or parallel. More than one secondary coil or secondary coils with multiple taps can be placed in the working regions and further multiple flux paths can be utilised with one or more secondary coils placed in each of the working regions. This is made obvious by the disclosures of the linear and rotary devices herein and based on the fact that the working regions of the flux paths are identical.

Fig.45X and **Fig.45A** also show the paths of the static flux of the permanent magnet or magnets when no current is flowing in the control coils. In the arrangement shown in **Fig.45X** the flux from the single permanent magnet divides between the two working areas of the flux path. In the arrangement of **Fig.45A** all of the flux of one of the permanent magnets passes through one of the working regions and all of the flux of the second permanent magnet passes through the other working region. Each of the working regions in both cases are occupied by secondary coils.

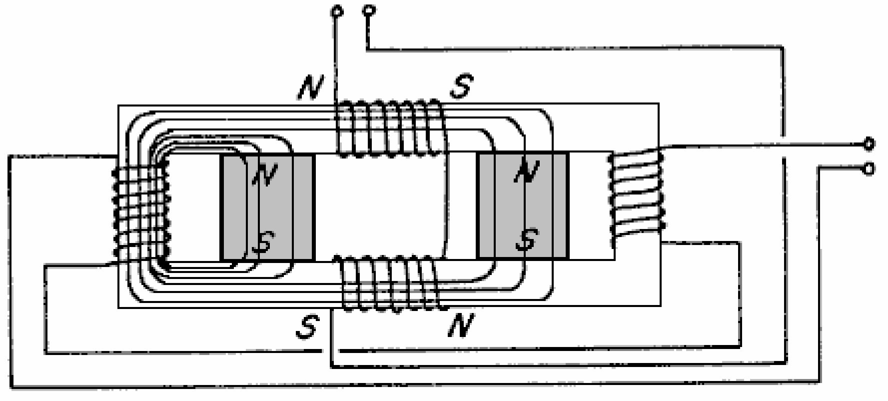

Fig. 45 Y

Fig.45Y and **Fig.45B** show the control coils energised with the polarity shown with respect to the polarity of the permanent magnet or magnets included. In **Fig.45Y** the opposing coil, blocks the passage of flux from the permanent magnet, and the aiding coil couples with the flux of the permanent magnet and therefore all of the flux of the permanent magnet passes through one working region as shown. In **Fig.45B** the opposing side of the coil blocks the passage of flux from the permanent magnet on the opposing side of the coil and the aiding side of the coil couples with the flux of the other permanent magnet and therefore all of the flux of both the permanent magnets passes through the working region as shown.

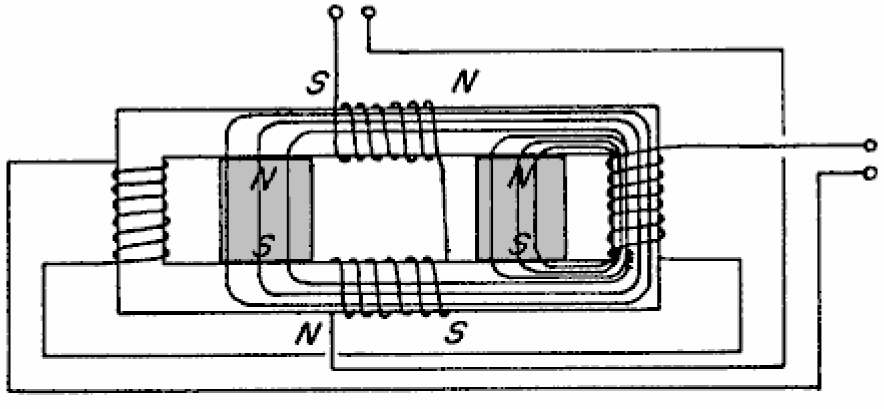

Fig. 45 Z

Fig.45Z and **Fig.45C** show the control coils energised with a polarity opposite of that shown in **Fig.45Y** and **Fig.45B**. The same action occurs and results in all of the permanent magnet or magnets path flux passing through the opposite working regions.

By alternating the polarity of the control coils during one cycle, one working region experiences an increasing flux and the opposite region experiences a decreasing flux and during the next cycle the opposite occurs. This results in the induction of a voltage in the secondary coils that is decided by the magnitude of the change in flux in the working region and the time in which this change occurs. The novelty of this discovery is that the primary flux inducing the voltage in the secondary coils is supplied by the permanent magnet or magnets and is far greater than the flux supplied by the control coils.

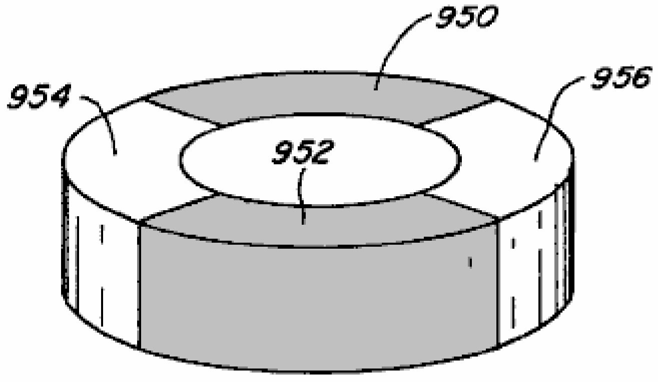

Fig. 46

Further, in the rotary motion devices of **Fig.31** and **Fig.34**, it is not necessary that respective rotor members **702** and **744** be formed of permanent magnets. Each could take the form shown in **Fig.46** where sections **950** and **952** are formed of magnetic material such as soft iron and sections **954** and **956** are formed by a non-magnetic filler material.

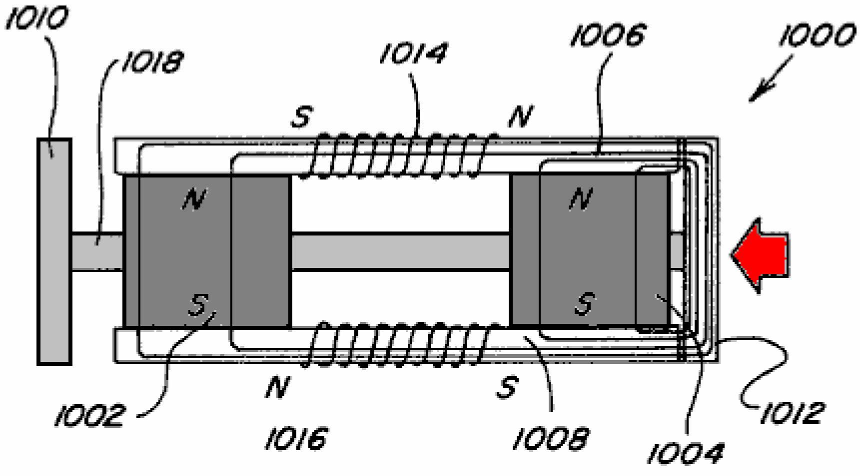

Fig. 48

Fig.47 and **Fig.48** show another embodiment **1000** of the subject device. The embodiment **1000** includes two spaced permanent magnets **1002** and **1004** each of which has its north pole adjacent to the upper surface and its south pole adjacent to the lower surface. A magnetisable bridging member **1006** extends across and makes contact with the north magnetic poles of the magnets **1002** and **1004** and another magnetisable bridging member **1008** makes contact with the south magnetic poles of the two permanent magnets **1002** and **1004**.

The members **1006** and **1008** extend slightly beyond the opposite sides of the respective permanent magnets **1002** and **1004** and a pair of spaced armature members **1010** and **1012** are positioned to move into and out of engagement with the ends of the members **1006** and **1008**. Coils **1014** and **1016** are mounted respectively on the members **1006** and **1008** in the space between the permanent magnets **1002** and **1004**, and the armatures **1010** and **1012** are shown connected together by a rod **1018** which enables them to move backwards and forwards into engagement with the respective members **1006** and **1008** when different voltages are applied to the respective coils **1014** and **1016**.

In **Fig.47**, the coils **1014** and **1016** are energised as shown with the coil **1014** having its north magnetic end to the left and its south magnetic end to the right and the opposite is true of the coil **1016**. In **Fig.48**, the voltage applied to the respective coils **1014** and **1016** is reversed so that the polarity of the left end of coil **1014** is south and the polarity of the opposite end of the same coil **1014** is a north magnetic pole. The reverse is true of the coil **1016**. In **Fig.47** and **Fig.48** it should be noted that the relationship of aiding and opposing is indicated on the figures to indicate the relationship when the coils are energised. For example, in **Fig.47** when the coils are energised as shown the relationship is opposing for the permanent magnet **1002** and is aiding with respect to the permanent magnet **1004**. The reverse is true when the voltage on the coils is reversed as shown in **Fig.48**. The movement of the armature is therefore controlled by the proper timing of the voltage on these coils. The same principles can be applied to produce rotating movement as shown in **Fig.42**.

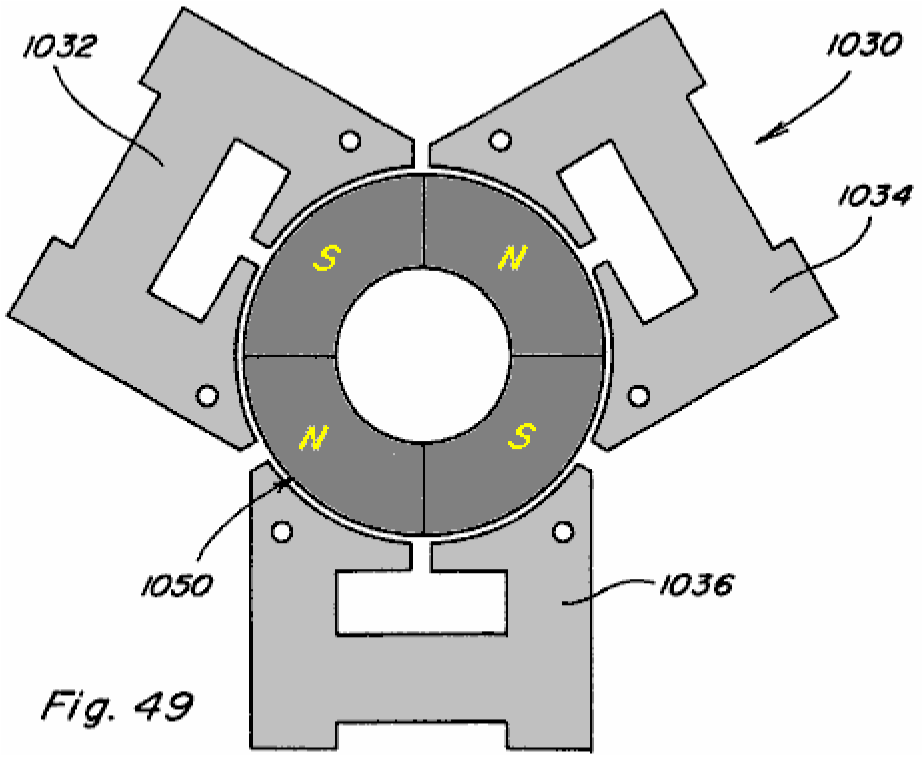

Fig. 49

Fig.49 shows another embodiment **1030** of the subject invention using principles similar to those described in connection with **Fig.47** and **Fig.48**. The embodiment **1030** includes a plurality, three being shown, of stationary members **1032**, **1034** and **1036**.

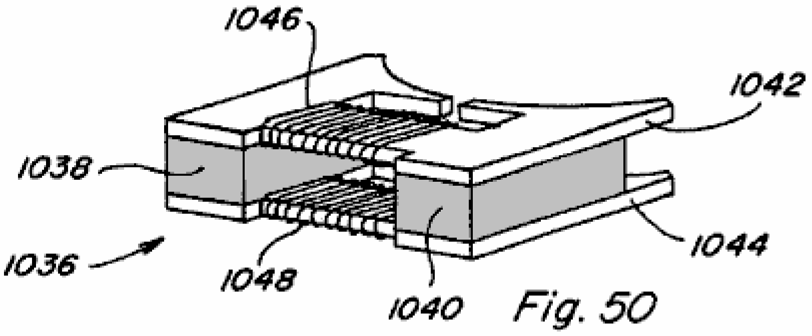

Fig. 50

The details of these members are better shown in **Fig.50** which shows the details of the member **1036**. This member includes a pair of permanent magnets **1038** and **1040**, each of which has magnetisable members mounted adjacent to it's opposite sides, as in the previous construction. The members **1042** and **1044** also have coils **1046** and **1048**, respectively, and the coils are energised as described in connection with **Fig.47** and **Fig.48** to produce aiding and opposing magnetism. The construction shown in **Fig.49** may have three stator portions as shown or it may have more stator portions as desired. The rotor **1050** is positioned in the space between the members **1032**, **1034** and **1036** and includes a permanent magnet portion part of which has its north magnetic pole on the surface as shown and the other parts has its south magnetic pole in the same surface as shown. The permanent magnets **1038** and **1040** on the stators interact with the permanent magnets on the rotor to produce the rotating motion and is controlled by the energising of the coils.

Other applications and advantages of the devices and methods of the present invention exist and various modifications are possible, and therefore the present invention is not intended to be limited to the specific examples disclosed herein. Accordingly, the spirit and scope of the invention are to be limited only by the terms of the appended claims.

CLAIMS

1. A permanent magnet device, comprising a permanent magnet having north and south pole faces, a first pole piece, a second pole piece, a first control coil, a second control coil, and circuit means, the first pole piece positioned adjacent the north pole face of the permanent magnet and including a first path portion, a second path portion and a third portion, the first path portion extending beyond a perimeter of the north pole face in one direction and the second path portion extending beyond the perimeter of the north pole face in another direction to define first and second flux paths for magnetic flux emanating from the north pole face of the permanent magnet, the first path portion of the first pole piece connected to the second path portion of the first pole piece by the third portion which extends across the north pole face of the permanent magnet, the second pole piece positioned adjacent the south pole face and including a first path portion and a second path portion, the first path portion extending beyond a perimeter of the south pole face and substantially aligned with the first path portion of the first pole piece, the second path portion extending beyond the perimeter of the south pole face and substantially aligned with the second path portion of the first pole piece, the first control coil positioned around the first path portion of the first pole piece, the second control coil positioned around the second path portion of the first pole piece, the circuit means connected to each of the first control coil and the second control coil to alternately energise the first coil and the second coil in a timed sequential manner.

2. The permanent magnet device as set forth in claim 1, wherein the first control coil and the second control coil are alternately energised in a permanent magnet magnetic flux aiding manner.

3. The permanent magnet device as set forth in claim 1, wherein the first control coil and the second control coil are alternately energised in a permanent magnet magnetic flux opposing manner.

4. The permanent magnet device as set forth in claim 1, further comprising a rotor member mounted on a shaft for rotation therewith, the rotor member sized, shaped, and positioned to extend substantially from the first path portion of the first pole piece to the first path portion of the second pole piece during at least some part of its rotation.

5. The permanent magnet device as set forth in claim 4, wherein the rotor member is formed by at least one permanent magnet.

6. The permanent magnet device as set forth in claim 1, wherein the second path portion of the first pole piece and the second path portion of the second pole piece are positioned alongside the first path portion of the first pole piece and the first path portion of the first pole piece.

7. The permanent magnet device as set forth in claim 1, further comprising a first bypass extending from the first path portion of the first pole piece to the first path portion of the second pole piece, one end of the first bypass positioned adjacent the first path portion of the first pole piece and between the permanent magnet and the first control coil.

8. The permanent magnet device as set forth in claim 6, further comprising a second bypass extending from the second path portion of the first pole piece to the second path portion of the second pole piece, one end of the second bypass positioned adjacent the second path portion of the first pole piece and between the permanent magnet and the second control coil.

9. The permanent magnet device as set forth in claim 1, further comprising a plurality of armatures arranged to define a path of movement, wherein the second path portion of the first pole piece and the second path portion of the second pole piece are positioned alongside the first path portion of the first pole piece and the first path portion of the second pole piece, and wherein all of such pole piece path portions include an end face positioned adjacent the path of movement defined by the plurality of armatures.

10. The permanent magnet device as set forth in claim 1, wherein the first control coil and the second control coil are simultaneously energised one in a permanent magnet magnetic flux aiding manner and one in a permanent magnet magnetic flux opposing manner.

11. The permanent magnet device as set forth in claim 1, further comprising two shaft connected armatures which can be positioned adjacent the ends of the first and second pole pieces, wherein each of the armatures is formed by a permanent magnet.

12. The permanent magnet device of claim 1 further comprising a first fixed armature extending between the first path portion of the first pole piece to the first path portion of the second pole piece and a second fixed armature extending between the second path portion on the first pole piece to the second path portion of the second pole piece.

13. The permanent magnet device of claim 12 where a first secondary coil is wrapped around the first fixed armature and a second secondary coil is wrapped around the second fixed armature.

14. The permanent magnet device of claim 13 including circuit means connected to the control coils to control the energising thereof to produce a varying flux in the armatures and to induce voltage in the secondary coils.

15. The permanent magnet device of claim 1 wherein there are at least two permanent magnets each having north and south pole faces, the first pole piece being positioned extending between the north pole faces of the permanent magnets and the second pole piece positioned extending between adjacent south pole faces of the permanent magnets.

16. A method for controlling the path of magnetic flux from a permanent magnet, the method comprising the steps of:

(**a**) placing a first pole piece adjacent a first pole face of the permanent magnet so as to have at least first and second path portions extending beyond a perimeter of the first pole face;

(**b**) placing a second pole piece adjacent a second pole face of the permanent magnet so as to include at least one portion which substantially aligns with the first and second path portions of the first pole piece;

(**c**) placing a first control coil along and around the first path portion of the first pole piece;

(**d**) placing a second control coil along and around the second path portion of the first pole piece;

(**e**) repeatedly energising the first control coil in a permanent magnet magnetic flux opposing manner so as to prevent magnetic flux of the permanent magnet from traversing the first path portion of the first pole piece; and

(**f**) repeatedly energising the second control coil in a permanent magnet magnetic flux opposing manner so as to prevent magnetic flux of the permanent magnet from traversing the second path portion of the first pole piece.

17. The method as set forth in claim 16 wherein the energisation of steps (e) and (t) take place in a simultaneous manner.

18. A method for controlling the path of magnetic flux from a permanent magnet, the method comprising the steps of:

(**a**) placing a first pole piece adjacent a first pole face of the permanent magnet so as to have at least first and second path portions extending beyond a perimeter of the first pole face;

(**b**) placing a second pole piece adjacent a second pole face of the permanent magnet so as to include at least one portion which substantially aligns with the first and second path portions of the first pole piece;

(**c**) placing a first control coil along and around the first path portion of the first pole piece;

(**d**) placing a second control coil along and around the second path portion of the first pole piece; and

(**e**) alternately performing the following steps in a repeated manner:

(**i**) energising the first control coil in a permanent magnet magnetic flux aiding manner so as to couple with substantially all magnetic flux of the permanent magnet such that substantially no magnetic flux of the permanent magnet traverses the second path portion of the first pole piece when the first control coil is so energised; and

(**ii**) energising the second control coil in a permanent magnet magnetic flux opposing manner so as to couple with substantially all magnetic flux of the permanent magnet such that substantially no magnetic flux of the permanent magnet traverses the first path portion of the first pole piece when the second control coil is so energised.

19. A method for controlling the path of magnetic flux from a permanent magnet the method comprising the steps of:

(**a**) placing a first pole piece adjacent a first pole face of the permanent magnet so as to have at least first and second path portions extending beyond a perimeter of the first pole face;

(**b**) placing a second pole piece adjacent a second pole face of the permanent magnet so as to include at least one portion which substantially aligns with the first and second path portions of the first pole piece;

(**c**) placing a first control coil along and around the first path portion of the first pole piece;

(**d**) placing a second control coil along and around the second path portion of the first pole piece; and

(**e**) alternately performing the following steps in a repeated manner:

(**i**) simultaneously energising the first control coil in a permanent magnet magnetic flux aiding manner and the second control coil in a permanent magnet flux opposing manner; and

(**ii**) simultaneously energising the first control coil in a permanent magnet flux opposing manner and the second control coil in a permanent magnet magnetic flux aiding manner.

20. A rotary motion device, comprising a rotor assembly including a shaft which defines an axis of rotation of the assembly, a rotor pole piece mounted for rotation with the shaft, the rotor pole piece including an outer ring portion having at least two path portions extending inwardly from a periphery of the outer ring portion;

a stator assembly including a permanent magnet having a generally ring-shaped configuration, a first pole face of the permanent magnet positioned adjacent the outer ring portion of the rotor pole piece, the stator assembly further comprising a stator pole piece including an outer ring portion positioned adjacent a second pole face of the permanent magnet and having a plurality of path portions extending inwardly from the periphery, each path portion further including a respective portion which extends toward a plane defined by the first pole face of the permanent magnet and capable of being aligned with each of the rotor pole piece path portions at certain rotational positions of the rotor pole piece, each path portion including a control coil positioned along it;

and circuit means connected to each of the coils and including a source of electrical energy and switch means for energising respective ones of the control coils in a predetermined timed sequence based upon rotation of the rotor assembly.

21. A rotary motion device, comprising:

a rotor assembly including a shaft which defines an axis of rotation of the assembly, a pair of spaced elongated rotor members mounted on the shaft at spaced locations thereon and angularity oriented with respect to each other, each of the elongated rotor members formed of a magnetic material;

a stator assembly including a permanent magnet having opposed first and second pole faces, a first pole piece positioned adjacent the first pole face and a second pole piece positioned adjacent the second pole face, each pole piece including a respective first path portion extending beyond a perimeter of its adjacent pole face and having an curved shaped end portion, the first path portion of the first pole piece aligned with the first path portion of the second pole piece, each pole piece further including a respective second path portion extending beyond the perimeter of its adjacent pole face in a direction opposite to that of the first path portions and having an curved shaped end portion, the second path portion of the first pole piece aligned with the second path portion of the second pole piece, at least one of the first path portions of the first pole piece and the first path portion of the second pole piece including a control coil mounted on at least one of the pole pieces, at least one of the second path portions of the first pole piece and the second path portion of the second pole piece including a control coil mounted on at least one of the pole pieces,

wherein the rotor assembly extends from end to end of the stator assembly such that the elongate members are aligned with the curved shaped end portions of the path portions of the pole pieces;

and circuit means connected to each of the coils and including a source of electrical energy and switch means for energising respective ones of the control coils in a predetermined timed sequence based upon rotation of the rotor assembly.

22. A rotary motion device comprising:

a rotor assembly including a shaft which defines an axis of rotation of the assembly, a ring-shaped rotor member mounted for rotation with the shaft, the ring-shaped rotor member including a plurality of distinct circumferential regions;

a stator assembly including a first permanent magnet, a first pole piece positioned against a first pole face and a second pole piece positioned against a second pole face, the first pole piece including at least a first path portion extending beyond a perimeter of the first pole face, the second pole piece including at least a first path portion extending beyond a perimeter of the second pole face, the first path portion of the first pole piece aligned with the first path portion of the second pole piece, at least a portion of the ring-shaped rotor member positioned between the first path portion of the first pole piece and the first path portion of the second pole piece, at least one of the first path portions of the first pole piece and the first path portion of the second pole piece including a first control coil positioned at a point intermediate the first permanent magnet and the ring-shaped rotor member;

and circuit means connected to the first control coil and including a source of electrical energy and switch means for energising the first control coil in a predetermined timed manner based upon rotation of the rotor assembly.

23. The rotary motion device as set forth in claim 22, wherein the ring-shaped rotor member is formed by a permanent magnet having distinct circumferential regions of opposite polarity.

24. The rotary motion device as set forth in claim 23, wherein the first pole piece includes a second path portion spaced from and extending adjacent to the first path portion, the second pole piece including a second path portion spaced from and extending adjacent to the first path portion such that the second path portion of the first pole piece is aligned with the second path portion of the second pole piece, at least a portion of the ring-shaped permanent magnet rotor member positioned between the second path portion of the first pole piece and the second path portion of the second pole piece, at least one of the second path portions of the first pole piece and the second path portion of the second pole piece having a second control coil mounted on at least one of the pole pieces at a point intermediate the first permanent magnet and the ring-shaped permanent magnet rotor member, the second control coil connected to the circuit means so as to be energised in a predetermined timed manner based upon rotation of the rotor assembly.

25. The rotary motion device as set forth in claim 22, wherein the stator assembly further comprises a second permanent magnet, a third pole piece positioned adjacent a first pole face of the second permanent magnet and a fourth pole piece positioned adjacent a second pole face of the second permanent magnet, the third pole piece including at least a first path portion extending beyond a perimeter of the second permanent magnet first pole face, the fourth pole piece including at least a first path portion extending beyond a perimeter of the second permanent magnet second pole face, the first path portion of the third pole face aligned with the first path portion of the fourth pole piece, at least a portion of the ring-shaped permanent magnet rotor member positioned between the first path portion of the third pole piece and the first path portion of the fourth pole piece, at least one of the first path portions of the third pole piece and the first path portion of the fourth pole piece including a third control coil mounted on at least one of the pole pieces at a point intermediate the second permanent magnet and the ring-shaped permanent magnet rotor member, the third pole piece including a second path portion spaced from and extending adjacent to the first path portion the fourth pole piece including a second path portion spaced from and extending adjacent to the first path portion thereof such that the second path portion of the third pole piece is aligned with the second path portion of the fourth pole piece, at least a portion of the ring-shaped permanent magnet rotor member positioned between the second path portion of the third pole piece and the second path portion of the fourth pole piece, at least one of the second path portions of the third pole piece and the second path portion of the fourth pole piece including a fourth control coil mounted on at least one of the pole pieces at a point intermediate the second permanent magnet and the ring-shaped permanent magnet rotor member, wherein each of the third and fourth control coils are connected to the circuit means so as to be energised in a predetermined timed manner based upon rotation of the rotor assembly.

26. A device for producing rotary motion comprising:

a rotor assembly including a shaft which defines an axis of rotation for the assembly, a ring-shaped rotor member mounted for rotation with the shaft, the ring-shaped rotor member having a plurality of distinct circumferentially positioned regions extending around the axis, a stator assembly including a first permanent magnet, a first pole piece positioned against the first pole face of the first pole piece and a second pole piece positioned against a second pole face of the first pole piece, the first pole piece including at least a first path portion extending beyond a perimeter of the first pole face, the second pole piece including at least a first path portion extending beyond the perimeter of the second pole face, the first path portion of the first pole piece aligned with the first path portion of the second pole piece, at least a portion of the ring-shaped rotor member positioned between the first path portion of the first pole piece and the first path portion of the second pole piece, at least one of the first path portions of the first pole piece and the first path portion of the second pole piece including a first control coil mounted on at least one of the pole pieces at a point intermediate the first permanent magnet and the ring-shaped rotor member; and circuit means connected to the first control coil and including a source of electrical energy and switch means for energising the first control coil in a predetermined timed manner based upon position of the rotor assembly during rotation of the rotor assembly.

27. The device for producing rotary motion of claim 26 wherein the circuit means includes means for timing the energising of the first control coil includes means for adjusting the timing thereof.

28. The device for producing rotor motion of claim 26 including means to vary the flux generated in the first and second pole pieces.

29. A device for handling the flux between two separate permanent magnets each of which has a north magnetic pole adjacent one side face and the south magnetic pole adjacent to the opposite side face, the north and south side pole faces respectively of both magnets being substantially in alignment, a first member in surface-to-surface contact with the north magnetic faces of the spaced permanent magnets, a second member in surface-to-surface contact with the south magnetic faces of the spaced permanent magnets, first and second armatures each positioned adjacent opposite ends of the first and second permanent magnets and adjacent to opposite ends of the spaced members, a coil mounted on each of the members in the space between the adjacent permanent magnets, and means for applying voltages of predetermined polarities across the respective coils to change the magnetic coupling between the permanent magnets and between the armatures.

30. A device for producing rotational movement comprising:

a rotor having a shaft rotatable about the axis thereof, a member constructed of permanent magnets mounted on the shaft, said member having circumferential portions some of which have a north magnetic pole and others a south magnetic pole adjacent to the same side thereof, the opposite surface of the permanent magnet member having north magnetic poles opposite the south magnetic poles and south magnetic poles opposite the north magnetic poles, a stator having a plurality of circumferentially spaced portions each of which includes at least one permanent magnet and a pair of members mounted adjacent opposite sides of the permanent magnets, the members being positioned adjacent to the periphery of the rotor permanent magnet member and means on the member adjacent each opposite side of the stator permanent magnet for mounting a coil, and means for energising the coil on each stator portion in sequence to produce magnetic coupling force between the stator and the rotor in a direction to produce rotating motion of the rotor.

31. A device including a rotating member and a stationary member, each having a permanent magnet portion positioned to produce magnetic coupling force between them in predetermined positions thereof, the rotor including a shaft rotatable about its axis and the permanent magnet extending around the shaft and formed by a plurality of adjacent portions of permanent magnet material whereby adjacent portions have their north and south magnetic pole faces on opposite sides of the rotor permanent magnet, a plurality of stator members each stator member having at least one permanent magnet having a north magnetic pole adjacent one side and a south magnetic pole adjacent to the opposite side, a pair of members positioned adjacent respective opposite sides of the stator permanent magnet in position to extend to adjacent the rotor permanent magnet whereby a flux path is formed between the members and the stator and rotor permanent magnets, a coil mounted on each member of the stator and means for applying a voltage of predetermined polarity to each of said coils to control the flux through a path between the permanent magnets and to control the coupling force between the permanent magnets on the stator and the permanent magnets on the rotor.

32. A motion producing device comprising at least one permanent magnet having a north pole opposite and spaced from a south pole, a pair of spaced substantially parallel members adjacent respectively the north and south poles of the at least one permanent magnet and extending outwardly to substantially aligned opposite edges, a flux supporting member positioned adjacent the respective opposite edges of each pair of parallel members, a coil on selected ones of the parallel members, and a source of electrical energy connected to each of the coils for energising the coils to change the flux in the parallel members and in the flux supporting members.

33. The motion producing device of claim 32 wherein there are at least two spaced permanent magnets extending between the parallel members.

34. The motion producing device of claim 32 wherein one of said pair of parallel members is subdivided into a plurality of sidewardly extending portions extending to one of said opposite side edges, at least one of said coils being positioned on at least one of said sidewardly extending portions.

35. The motion producing device of claim 34 wherein there are coils on a plurality of respective ones of the sidewardly extending portions.

36. The motion producing device of claim 32 wherein the permanent magnet and the parallel members are annular in shape.

37. The motion producing device of claim 32 including a by-pass member extending between the pair of spaced substantial parallel members adjacent one side of the permanent magnet.

38. A permanent magnet device comprising at least two permanent magnets each having north and south pole faces, a first pole piece, a second pole piece, a first control coil, a second control coil and circuit means, the first pole piece positioned adjacent the north pole faces of the at least two permanent magnets and including a first path portion, a second path portion and a third path portion, the first path portion extending beyond the perimeter of the north pole faces and the second path portion extending beyond the perimeter of the north pole faces to define first and second flux paths for magnetic flux emitting from the north pole faces of the at least two permanent magnets, the first path portion of the first pole piece connected to the second path portion of the first pole piece by a third portion which extends across the north pole face of the at least two permanent magnets, the second pole piece positioned adjacent to the south pole faces of the at least two permanent magnets and including a first path portion and a second path portion, the first path portion extending beyond a perimeter of the south pole faces and substantially aligned with the first path portion of the first pole piece, the second path portion extending beyond the perimeter of the south pole faces and substantially aligned with the second path portion of the first pole piece, the first control coil positioned around the first path portion of the first pole piece, the second control coil positioned around the second path portion of the first pole piece, and the circuit means connected to each of the first control coil and the second control coil to alternately energise the first coil and the second coil in a timed sequential manner.

39. The permanent magnet device of claim 38 further comprising a first fixed armature extending between the first path portion of the first pole piece to the first path portion of the second pole piece and a second fixed armature extending between the second path portion of the first pole piece to the second path portion of the second pole piece.

40. The permanent magnet device of claim 39 where a first secondary coil is wrapped around the first fixed armature and a second secondary coil is wrapped around the second fixed armature.

41. The permanent magnet device of claim 40 including circuit means connected to the control coils to control the energising thereof to produce a varying flux in the armatures and to induce voltage in the secondary coils.

42. The permanent magnet device of claim 38 wherein there are at least two permanent magnets each having north and south pole faces, the first pole piece being positioned extending between the north pole faces of the permanent magnets and the second pole piece positioned extending between the south pole faces of the permanent magnets.

United States Patent 6,362,718 Dated: 26th March 2002

Inventors: **Stephen Patrick, Thomas Bearden, James Hayes, Kenneth Moore and James Kenny**

MOTIONLESS ELECTROMAGNETIC GENERATOR

Please note that this is a re-worded excerpt from this patent. It describes an electrical device which both powers itself and supplies current to additional external equipment.

ABSTRACT

An electromagnetic generator without moving parts includes a permanent magnet and a magnetic core including first and second magnetic paths. A first input coil and a first output coil extend around portions of the first magnetic path, while a second input coil and a second output coil extend around portions of the second magnetic path. The input coils are alternatively pulsed to provide induced current pulses in the output coils. Driving electrical current through each of the input coils reduces a level of flux from the permanent magnet within the magnet path around which the input coil extends. In an alternative embodiment of an electromagnetic generator, the magnetic core includes annular spaced-apart plates, with posts and permanent magnets extending in an alternating fashion between the plates. An output coil extends around each of these posts. Input coils extending around portions of the plates are pulsed to cause the induction of current within the output coils.

DESCRIPTION

1. Field of the Invention: This invention relates to a magnetic generator without moving parts, used to produce electrical power, and more particularly, to such a device capable of powering itself.

2. Description of the Related Art: The patent literature describes a number of magnetic generators, each of which includes a permanent magnet, two magnetic paths external to the permanent magnet, each of which extends between the opposite poles of the permanent magnet, switching means for causing magnetic flux to flow alternately along each of the two magnetic paths, and one or more output coils in which current is induced to flow by means of changes in the magnetic field within the device. These devices operate in accordance with an extension of Faraday's Law, indicating that an electrical current is induced within a conductor within a changing magnetic field, even if the source of the magnetic field is stationary.

A method for switching magnetic flux to flow predominantly along either of two magnetic paths between opposite poles of a permanent magnet is described as a "flux transfer" principle by R. J. Radus in Engineer's Digest, Jul. 23, 1963. This principle is used to exert a powerful magnetic force at one end of both the north and south poles and a very low force at the other end, without being used in the construction of a magnetic generator. This effect can be caused mechanically, by keeper movement, or electrically, by driving electrical current through one or more control windings extending around elongated versions of the pole pieces **14**. Several devices using this effect are described in U.S. Patent Nos. 3,165,723, 3,228,013, and 3,316,514.

Another step toward the development of a magnetic generator is described in U.S. Patent No. 3,368,141, as a device including a permanent magnet in combination with a transformer having first and second windings about a core, with two paths for magnetic flux leading from each pole of the permanent magnet to either end of the core, so that, when an alternating current induces magnetic flux direction changes in the core, the magnetic flux from the permanent magnet is automatically directed through the path which corresponds with the direction taken by the magnetic flux through the core due to the current. In this way, the magnetic flux is intensified. This device can be used to improve the power factor of a typically inductively loaded alternating current circuit.

Other patents describe magnetic generators in which electrical current from one or more output coils is described as being made available to drive a load, in the more conventional manner of a generator. For example, U.S. Patent No. 4,006,401 describes an electromagnetic generator including a permanent magnet and a core member, in which the magnetic flux flowing from the magnet in the core member is rapidly alternated by switching to generate an alternating current in a winding on the core member. The device includes a permanent magnet and two separate magnetic flux circuit paths between the north and south poles of the magnet. Each of the circuit paths includes two switching means for alternately opening and closing the circuit paths, generating an alternating current in a winding on the core member. Each of the switching means includes a switching magnetic circuit intersecting the circuit path, with the switching magnetic circuit having a coil through which current is driven to induce magnetic flux to saturate the circuit path extending to the permanent magnet. Power to drive these coils is derived directly from the output of a continuously applied alternating current source. What is needed is an electromagnetic generator not requiring the application of such a current source.

U.S. Patent No. 4,077,001 describes a magnetic generator, or dc/dc converter, comprising a permanent magnet having spaced-apart poles and a permanent magnetic field extending between the poles of the magnet. A variable-reluctance core is disposed in the field in fixed relation to the magnet and the reluctance of the core is varied to cause the pattern of lines of force of the magnetic field to shift. An output conductor is disposed in the field in fixed relation to the magnet and is positioned to be cut by the shifting lines of permanent magnetic force so that a voltage is induced in the conductor. The magnetic flux is switched between alternate paths by means of switching coils extending around portions of the core, with the flow of current being alternated between these switching coils by means of a pair of transistors driven by the outputs of a flip-flop. The input to the flip flop is driven by an adjustable frequency oscillator. Power for this drive circuit is supplied through an additional, separate power source. What is needed is a magnetic generator not requiring the application of such a power source.

U.S. Patent No. 4,904,926 describes another magnetic generator using the motion of a magnetic field. The device includes an electrical winding defining a magnetically conductive zone having bases at each end, the winding including elements for the removing of an induced current therefrom. The generator further includes two pole magnets, each having a first and a second pole, each first pole in magnetic communication with one base of the magnetically conductive zone. The generator further includes a third pole magnet, the third pole magnet oriented intermediately of the first poles of the two pole electromagnets, the third pole magnet having a magnetic axis substantially transverse to an axis of the magnetically conductive zone, the third magnet having a pole nearest to the conductive zone and in magnetic attractive relationship to the first poles of the two pole electromagnets, in which the first poles thereof are like poles. Also included in the generator are elements, in the form of windings, for cyclically reversing the magnetic polarities of the electromagnets. These reversing means, through a cyclical change in the magnetic polarities of the electromagnets, cause the magnetic flux lines associated with the magnetic attractive relationship between the first poles of the electromagnets and the nearest pole of the third magnet to correspondingly reverse, causing a wiping effect across the magnetically conductive zone, as lines of magnetic flux swing between respective first poles of the two electromagnets, thereby inducing electron movement within the output windings and thus generating a flow of current within the output windings.

U.S. Patent No. 5,221,892 describes a magnetic generator in the form of a direct current flux compression transformer including a magnetic envelope having poles defining a magnetic axis and characterised by a pattern of magnetic flux lines in polar symmetry about the axis. The magnetic flux lines are spatially displaced relative to the magnetic envelope using control elements which are mechanically stationary relative to the core. Further provided are inductive elements which are also mechanically stationary relative to the magnetic envelope. Spatial displacement of the flux relative to the inductive elements causes a flow of electrical current. Further provided are magnetic flux valves which provide for the varying of the magnetic reluctance to create a time domain pattern of respectively enhanced and decreased magnetic reluctance across the magnetic valves, and, thereby, across the inductive elements.

Other patents describe devices using superconductive elements to cause movement of the magnetic flux. These devices operate in accordance with the Meissner effect, which describes the expulsion of magnetic flux from the interior of a superconducting structure as the structure undergoes the transition to a superconducting phase. For example, U.S. Patent No. 5,011,821 describes an electric power generating device including a bundle of conductors which are placed in a magnetic field generated by north and south pole pieces of a permanent magnet. The magnetic field is shifted back and forth through the bundle of conductors by a pair of thin films of superconductive material. One of the thin films is placed in the superconducting state while the other thin film is in a non-superconducting state. As the states are cyclically reversed between the two films, the magnetic field is deflected back and forth through the bundle of conductors.

U.S. Patent No. 5,327,015 describes an apparatus for producing an electrical impulse comprising a tube made of superconducting material, a source of magnetic flux mounted about one end of the tube, a means, such as a coil, for intercepting the flux mounted along the tube, and a means for changing the temperature of the superconductor mounted about the tube. As the tube is progressively made superconducting, the magnetic field is trapped within the tube, creating an electrical impulse in the means for intercepting. A reversal of the superconducting state produces a second pulse.

None of the patented devices described above use a portion of the electrical power generated within the device to power the reversing means used to change the path of magnetic flux. Thus, like conventional rotary generators, these devices require a steady input of power, which may be in the form of electrical power driving the reversing means of one of these magnetic generators or the torque driving the rotor of a conventional rotary generator. Yet, the essential function of the magnetic portion of an electrical generator is simply to switch magnetic fields in accordance with precise timing. In most conventional applications of magnetic generators, the voltage is switched across coils, creating magnetic fields in the coils which are used to override the fields of permanent magnets, so that a substantial amount of power must be furnished to the generator to power the switching means, reducing the efficiency of the generator.

Recent advances in magnetic material, which have particularly been described by Robert C. O'Handley in Modern Magnetic Materials, Principles and Applications, John Wiley & Sons, New York, pp. 456-468, provide nanocrystalline magnetic alloys, which are particularly well suited forth rapid switching of magnetic flux. These alloys are primarily composed of crystalline grains, or crystallites, each of which has at least one dimension of a few nanometres. Nanocrystalline materials may be made by heat-treating amorphous alloys which form precursors for the nanocrystalline materials, to which insoluble elements, such as copper, are added to promote massive nucleation, and to which stable, refractory alloying materials, such as niobium or tantalum carbide are added to inhibit grain growth. Most of the volume of nanocrystalline alloys is composed of randomly distributed crystallites having dimensions of about 2-40 nm. These crystallites are nucleated and grown from an amorphous phase, with insoluble elements being rejected during the process of crystallite growth. In magnetic terms, each crystallite is a single-domain particle. The remaining volume of nanocrystalline alloys is made up of an amorphous phase in the form of grain boundaries having a thickness of about 1 nm.

Magnetic materials having particularly useful properties are formed from an amorphous Co--Nb--B (cobalt-niobium-boron) alloy having near-zero magnetostriction and relatively strong magnetisation, as well as good mechanical strength and corrosion resistance. A process of annealing this material can be varied to change the size of crystallites formed in the material, with a resulting strong effect on DC coercivity. The precipitation of nanocrystallites also enhances AC performance of the otherwise amorphous alloys.

Other magnetic materials are formed using iron-rich amorphous and nanocrystalline alloys, which generally show larger magnetisation that the alloys based on cobalt. Such materials are, for example, Fe--B--Si--Nb--Cu (iron-boron-silicon-niobium-copper) alloys. While the permeability of iron-rich amorphous alloys is limited by their relatively large levels of magnetostriction, the formation of a nanocrystalline material from such an amorphous alloy dramatically reduces this level of magnetostriction, favouring easy magnetisation.

Advances have also been made in the development of materials for permanent magnets, particularly in the development of materials including rare earth elements. Such materials include samarium cobalt, SmCo.sub.5, which is used to form a permanent magnet material having the highest resistance to demagnetisation of any known material. Other magnetic materials are made, for example, using combinations of iron, neodymium, and boron.

<u>SUMMARY OF THE INVENTION:</u>

It is a first objective of the present invention, to provide a magnetic generator which eliminates the need for an external power source during operation of the generator.

It is a second objective of the present invention to provide a magnetic generator in which a magnetic flux path is changed without a need to overpower a magnetic field to change its direction.

It is a third objective of the present invention to provide a magnetic generator in which the generation of electricity is accomplished without moving parts.

In the apparatus of the present invention, the path of the magnetic flux from a permanent magnet is switched in a manner not requiring the overpowering of the magnetic fields. Furthermore, a process of self-initiated iterative switching is used to switch the magnetic flux from the permanent magnet between alternate magnetic paths within the apparatus, with the power to operate the iterative switching being provided through a control circuit consisting of components known to use low levels of power. With self-switching, a need for an external power source during operation of the generator is eliminated, with a separate power source, such as a battery, being used only for a very short time during start-up of the generator.

According to a first aspect of the present invention, an electromagnetic generator is provided, including a permanent magnet, a magnetic core, first and second input coils, first and second output coils, and a switching circuit. The permanent magnet has magnetic poles at opposite ends. The magnetic core includes a first magnetic path, around which the first input and output coils extend, and a second magnetic path, around which the second input and output coils extend, between opposite ends of the permanent magnet. The switching circuit drives electrical current alternately through the first and second input coils. The electrical current driven through the first input oil causes the first input coil to produce a magnetic field opposing a concentration of magnetic flux from the permanent magnet within the first magnetic path. The electrical current driven through the second input coil causes the second input coil to produce a magnetic field opposing a concentration of magnetic flux from the permanent magnet within the second magnetic path.

According to another aspect of the present invention, an electromagnetic generator is provided, including a magnetic core, a plurality of permanent magnets, first and second pluralities of input coils, a plurality of output coils, and a switching circuit. The magnetic core includes a pair of spaced-apart plates, each of which has a central aperture, and first and second pluralities of posts extending between the spaced-apart plates. The permanent magnets each extend between the pair of spaced apart plates. Each permanent magnet has magnetic poles at opposite ends, with the magnetic fields of all the permanent magnets being aligned to extend in a common direction. Each input coil extends around a portion of a plate within the spaced-apart plates, between a post and a permanent magnet. An output coil extends around each post. The switching circuit drives electrical current alternately through the first and second input coils. Electrical current driven through each input coil in the first plurality of input coils causes an increase in magnetic flux within each post within the first plurality of posts from permanent magnets on each side of the post and a decrease in magnetic flux within each post within the second plurality of posts from permanent magnets on each side of the post. Electrical current driven through each input coil in the second plurality of input coils causes a decrease in magnetic flux within each post within the first plurality of posts from permanent magnets on each side of the post and an increase in magnetic flux within each post within the second plurality of posts from permanent magnets on each side of the post.

BRIEF DESCRIPTION OF THE DRAWINGS:

Figure 1 is a partly schematic front elevation of a magnetic generator and associated electrical circuits built in accordance with a first version of the first embodiment of the present invention:

FIG. 1

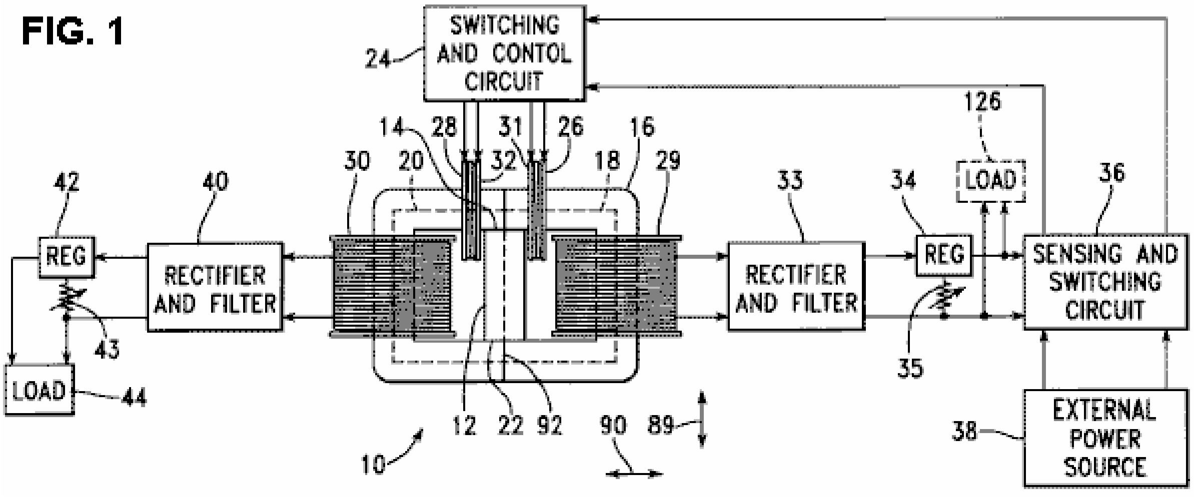

Figure 2 is a schematic view of a first version of a switching and control circuit within the associated electrical circuits of Figure 1:

FIG. 2

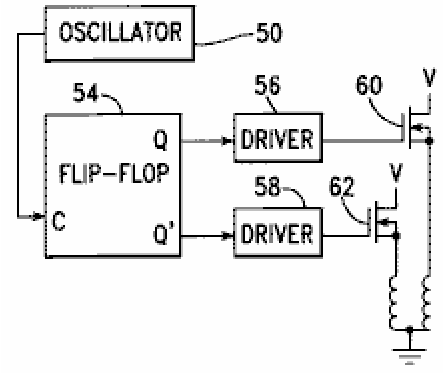

Figure 3 is a graphical view of drive signals produced within the circuit of Figure 2:

FIG. 3

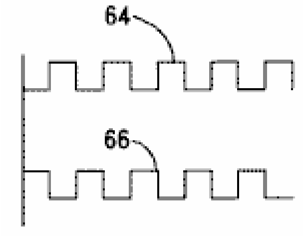

Figure 4 is a schematic view of a second version of a switching and control circuit within the associated electrical circuits of Figure 1:

FIG. 4

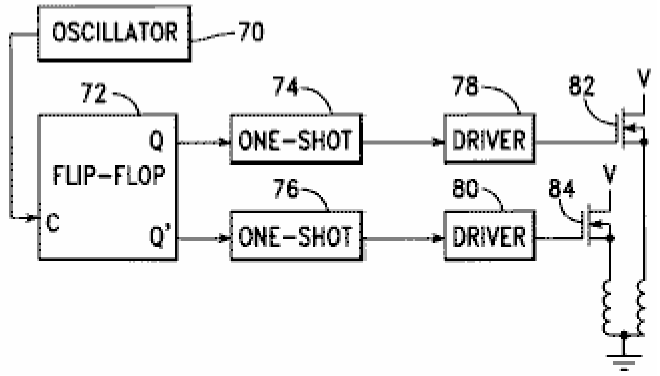

Figure 5 is a graphical view of drive signals produced within the circuit of Figure 3:

FIG. 5

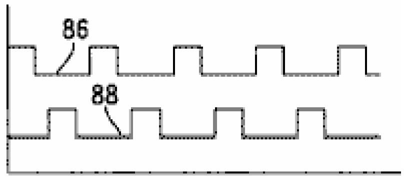

Figure 6A is a graphical view of a first drive signal within the apparatus of Figure 1,

Figure 6B is a graphical view of a second drive signal within the apparatus of Figure 1,

Figure 6C is a graphical view of an input voltage signal within the apparatus of Figure 1,

Figure 6D is a graphical view of an input current signal within the apparatus of Figure 1,

Figure 6E is a graphical view of a first output voltage signal within the apparatus of Figure 1,

Figure 6F is a graphical view of a second output voltage signal within the apparatus of Figure 1,

Figure 6G is a graphical view of a first output current signal within the apparatus of Figure 1,

Figure 6H is a graphical view of a second output current signal within the apparatus of Figure 1:

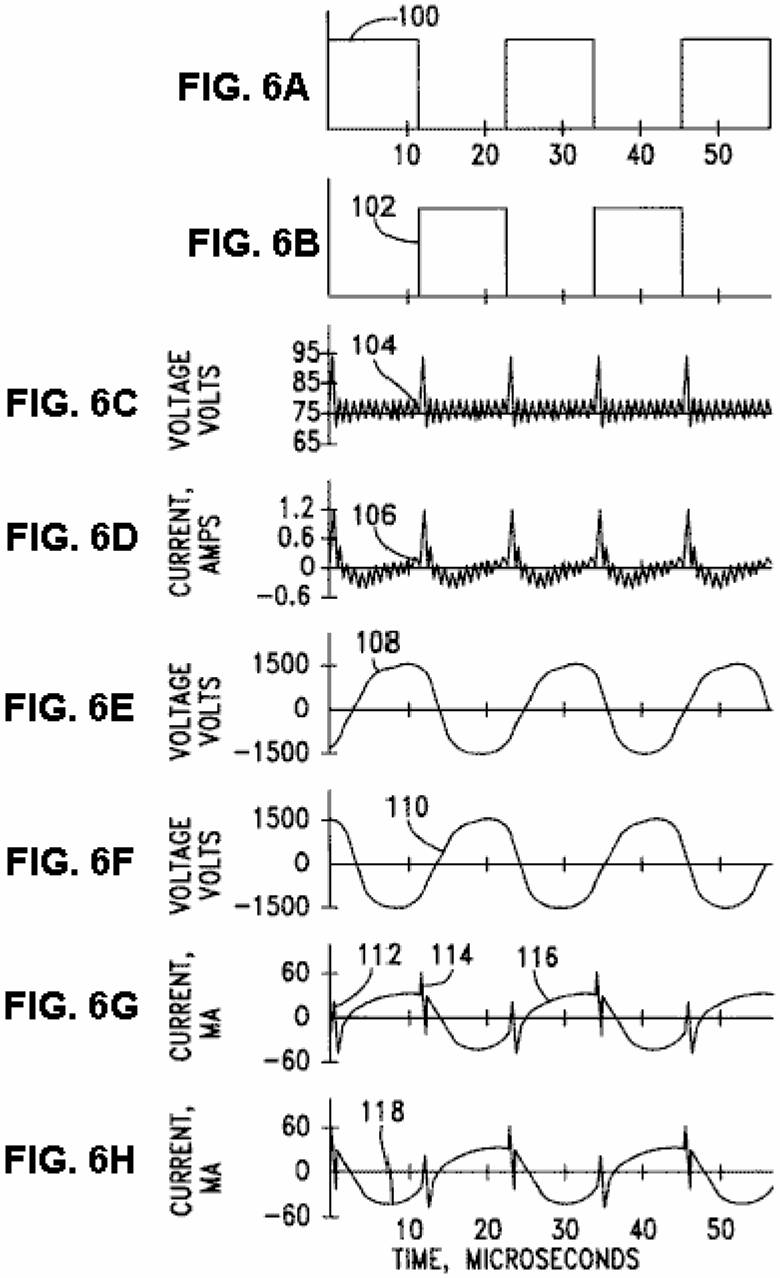

Figure 7 is a graphical view of output power measured within the apparatus of Figure 1, as a function of input voltage:

FIG. 7

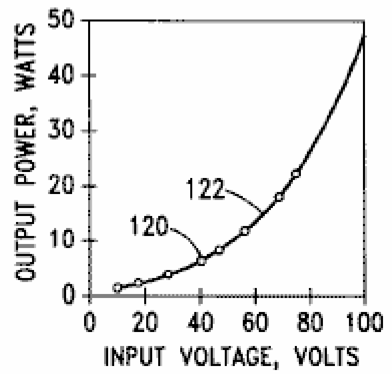

Figure 8 is a graphical view of a coefficient of performance, calculated from measurements within the apparatus of Figure 1, as a function of input voltage:

FIG. 8

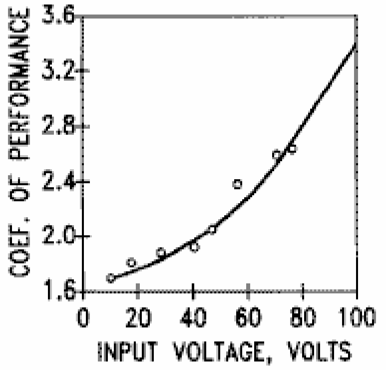

Figure 9 is a cross-sectional elevation of a second version of the first embodiment of the present invention:

FIG. 9

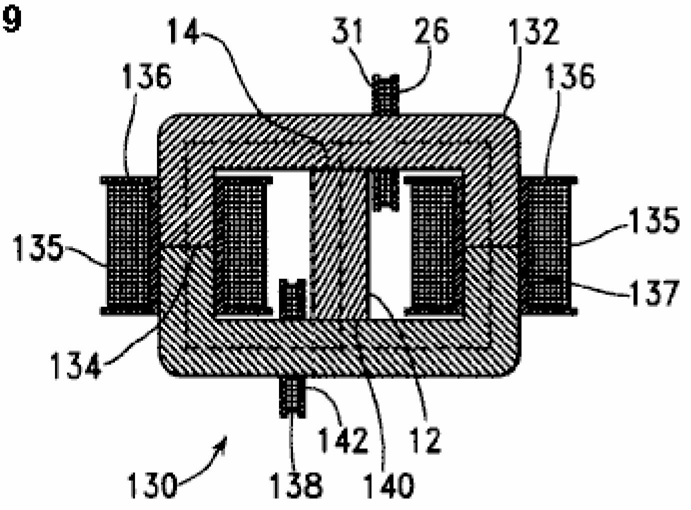

Figure 10 is a top view of a magnetic generator built in accordance with a first version of a second embodiment of the present invention:

FIG. 10

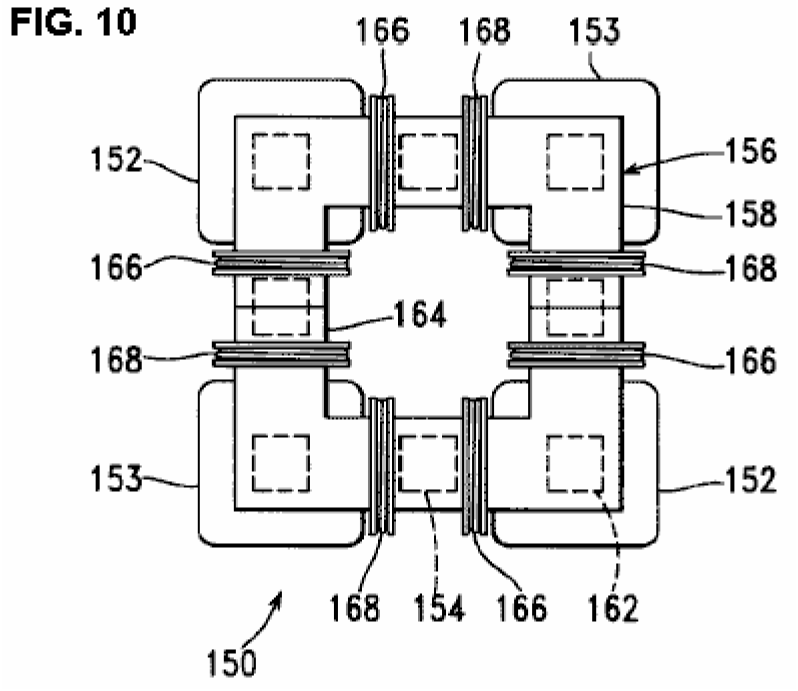

Figure 11 is a front elevation of the magnetic generator of Figure 10:

FIG. 11

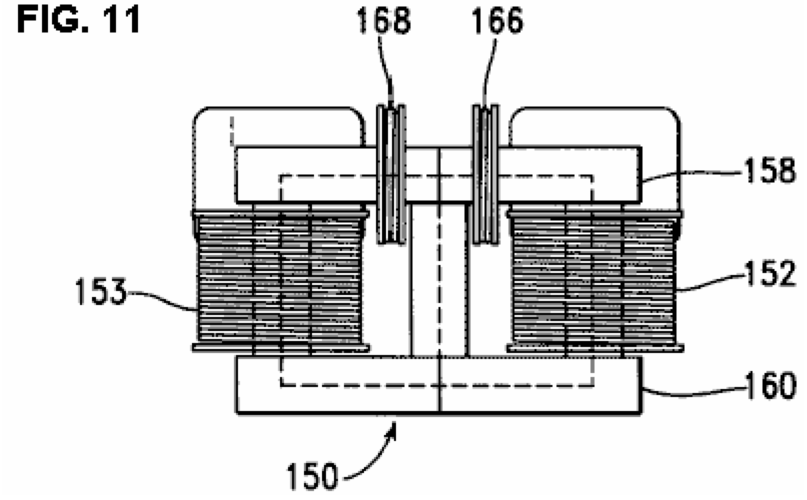

Figure 12 is a top view of a magnetic generator built in accordance with a second version of the second embodiment of the present invention:

FIG. 12

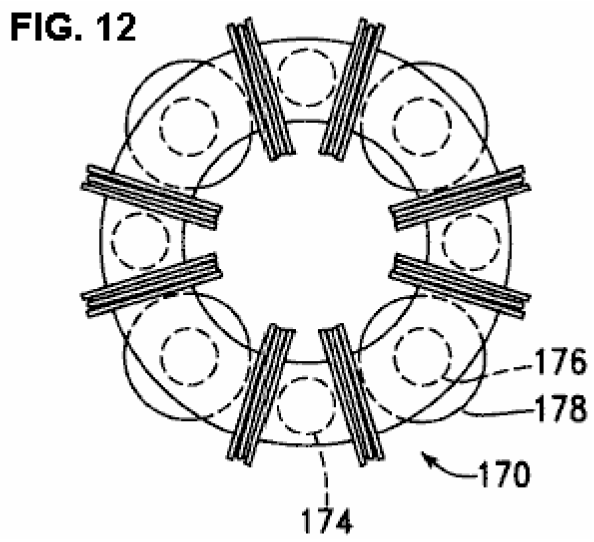

DETAILED DESCRIPTION OF THE INVENTION:

Fig.1 is a partly schematic front elevation, of an electromagnetic generator **10**, built in accordance with a first embodiment of the present invention, to include a permanent magnet **12** to supply input lines of magnetic flux moving from the north pole **14** of the magnet **12,** outward into magnetic flux path core material **16**.

The flux path core material **16** is configured to form a right magnetic path **18** and a left magnetic path **20**, both of which extend externally between the north pole **14** and the south pole **22** of the magnet **12**.

The electromagnetic generator **10** is driven by means of a switching and control circuit **24**, which alternately drives electrical current through a right input coil **26** and a left input coil **28**. These input coils each extend around a portion of the core material **16**, with the right input coil **26** surrounding a portion of the right magnetic path **18** and with the left input coil **28** surrounding a portion of the left magnetic path **20**. A right output coil **29** also surrounds a portion of the right magnetic path **18**, while a left output coil **30** surrounds a portion of the left magnetic path **20**.

In accordance with a preferred version of the present invention, the switching and control circuit **24** and the input coils **26, 28** are arranged so that, when the right input coil **26** is energised, a north magnetic pole is present at its left end **31**, the end closest to the north pole **14** of the permanent magnet **12**, and so that, when the left input coil **28** is energised, a north magnetic pole is present at its right end **32**, which is also the end closest to the north pole **14** of the permanent magnet **12**. Thus, when the right input coil **26** is magnetised, magnetic flux from the permanent magnet **12** is repelled from extending through the right input coil **26**. Similarly, when the left input coil **28** is magnetised, magnetic flux from the permanent magnet **12** is repelled from extending through the left input coil **28**.

Thus, it is seen that driving electrical current through the right input coil **26** opposes a concentration of flux from the permanent magnet **12** within the right magnetic path **18**, causing at least some of this flux to be transferred to the left magnetic path **20**. On the other hand, driving electrical current through the left input coil **28** opposes a concentration of flux from the permanent magnet **12** within the left magnetic path **20**, causing at least some of this flux to be transferred to the right magnetic path **18**.

While in the example of **Fig.1**, the input coils **26, 28** are placed on either side of the north pole of the permanent magnet **12**, being arranged along a portion of the core **16** extending from the north pole of the permanent magnet **12**, it is understood that the input coils **26, 28** could as easily be alternately placed on either side of the south pole of the permanent magnet **12**, being arranged along a portion of the core **16** extending from the south pole of the permanent magnet **12**, with the input coils **26, 28** being wired to form, when energised, magnetic fields having south poles directed toward the south pole of the permanent magnet **12**. In general, the input coils **26, 28** are arranged along the magnetic core on either side of an end of the permanent magnet forming a first pole, such as a north pole, with the input coils being arranged to produce magnetic fields of the polarity of the first pole directed toward the first pole of the permanent magnet.

Further in accordance with a preferred version of the present invention, the input coils **26, 28** are never driven with so much current that the core material **16** becomes saturated. Driving the core material **16** to saturation means that subsequent increases in input current can occur without effecting corresponding changes in magnetic flux, and therefore that input power can be wasted. In this way, the apparatus of the present invention is provided with an advantage in terms of the efficient use of input power over the apparatus of U.S. Patent No. 4,000,401, in which a portion both ends of each magnetic path is driven to saturation to block flux flow.

In the electromagnetic generator **10**, the switching of current flow within the input coils **26, 28** does not need to be sufficient to stop the flow of flux in one of the magnetic paths **18, 20** while promoting the flow of magnetic flux in the other magnetic path. The electromagnetic generator **10** works by changing the flux pattern; it does not need to be completely switched from one side to another.

Experiments have determined that this configuration is superior, in terms of the efficiency of using power within the input coils **26, 28** to generate electrical power within the output coils **29, 30**, to the alternative of arranging input coils and the circuits driving them so that flux from the permanent magnet is driven through the input coils as they are energised. This arrangement of the present invention provides a significant advantage over the prior-art methods shown, for example, in U.S. Patent No. 4,077,001, in which the magnetic flux is driven through the energised coils.

The configuration of the present invention also has an advantage over the prior-art configurations of U.S. Patent Nos. 3,368,141 and 4,077,001 in that the magnetic flux is switched between two alternate magnetic paths **18, 20** with only a single input coil **26, 28** surrounding each of the alternate magnetic paths. The configurations of U.S. Patent Nos. 3,368,141 and 4,077,001 each require two input coils on each of the magnetic paths. This advantage of the present invention is significant both in the simplification of hardware and in increasing the efficiency of power conversion.

The right output coil **29** is electrically connected to a rectifier and filter **33**, having an output driven through a regulator **34**, which provides an output voltage adjustable through the use of a potentiometer **35.** The output of the linear regulator **34** is in turn provided as an input to a sensing and switching circuit **36**. Under start up conditions, the sensing and switching circuit **36** connects the switching and control circuit **24** to an external power source **38**, which is, for example, a starting battery. After the electromagnetic generator **10** is properly started, the sensing and switching circuit **36** senses that the voltage available from regulator **34** has reached a predetermined level, so that the power input to the switching and control circuit **24** is switched from the external power source **38** to the output of regulator **34**. After this switching occurs, the electromagnetic generator **10** continues to operate without an application of external power.

The left output coil **30** is electrically connected to a rectifier and filter **40**, the output of which is connected to a regulator **42**, the output voltage of which is adjusted by means of a potentiometer **43**. The output of the regulator **42** is in turn connected to an external load **44.**

Fig.2 is a schematic view of a first version of the switching and control circuit **24**. An oscillator **50** drives the clock input of a flip-flop **54**, with the Q and Q' outputs of the flip-flop **54** being connected through driver circuits **56, 58** to power FETs **60, 62** so that the input coils **26, 28** are driven alternately. In accordance with a preferred version of the present invention, the voltage V applied to the coils **26, 28** through the FETs **60, 62** is derived from the output of the sensing and switching circuit **36**.

Fig.3 is a graphical view of the signals driving the gates of FETs **60, 62** of **Fig.2**, with the voltage driving the gate of FET **60** being represented by line **64**, and with the voltage driving FET **62** being represented by line **66**. Both of the coils **26, 28** are driven with positive voltages.

Fig.4 is a schematic view of a second version of the switching and control circuit **24.** In this version, an oscillator **70** drives the clock input of a flip-flop **72**, with the Q and Q' outputs of the flip-flop **72** being connected to serve as triggers for one-shots **74, 76.** The outputs of the one-shots **74, 76** are in turn connected through driver circuits **78, 80** to drive FETs **82, 84**, so that the input coils **26, 28** are alternately driven with pulses shorter in duration than the Q and Q' outputs of the flip flop **72**.

Fig.5 is a graphical view of the signals driving the gates of FETs **82, 84** of **Fig.4**, with the voltage driving the gate of FET **82** being represented by line **86**, and with the voltage driving the gate of FET **84** being represented by line **88**.

Referring again to **Fig.1**, power is generated in the right output coil **29** only when the level of magnetic flux is changing in the right magnetic path **18**, and in the left output coil **30** only when the level of magnetic flux is changing in the left magnetic path **20**. It is therefore desirable to determine, for a specific magnetic generator configuration, the width of a pulse providing the most rapid practical change in magnetic flux, and then to provide this pulse width either by varying the frequency of the oscillator **50** of the apparatus of **Fig.2**, so that this pulse width is provided with the signals shown in **Fig.3**, or by varying the time constant of the one-shots **74, 76** of **Fig.4**, so that this pulse width is provided by the signals of **Fig.5** at a lower oscillator frequency. In this way, the input coils are not left on longer than necessary. When either of the input coils is left on for a period of time longer than that necessary to produce the change in flux direction, power is being wasted through heating within the input coil without additional generation of power in the corresponding output coil.

A number of experiments have been conducted to determine the adequacy of an electromagnetic generator built as the generator **10** in **Fig.1**, to produce power both to drive the switching and control logic, providing power to the input coils **26, 28**, and to drive an external load **44**. In the configuration used in this experiment, the input coils **26, 28** had 40 turns of 18-gauge copper wire, and the output coils **29, 30** had 450 turns of 18-gauge copper wire. The permanent magnet **12** had a height of 40 mm (1.575 in. between its north and south poles, in the direction of arrow **89**, a width of 25.4 mm (1.00 in.), in the direction of arrow **90**, and in the other direction, a depth of 38.1 mm (1.50 in.). The core **16** had a height, in the direction of arrow **89**, of 90 mm (3.542 in.), a width, in the direction of arrow **90**, of 135 mm (5.315 in.) and a depth of 70 mm (2.756 in.). The core **16** had a central hole with a height, in the direction of arrow **89**, of 40 mm (1.575 mm) to accommodate the magnet **12**, and a width, in the direction of arrow **90**, of 85 mm (3.346 in.). The core **16** was fabricated of two "C"-shaped halves, joined at lines **92**, to accommodate the winding of output coils **29, 30** and input coils **26, 28** over the core material.

The core material was a laminated iron-based magnetic alloy sold by Honeywell as METGLAS Magnetic Alloy 2605SA1. The magnet material was a combination of iron, neodymium, and boron.

The input coils **26, 28** were driven at an oscillator frequency of 87.5 KHz, which was determined to produce optimum efficiency using a switching control circuit configured as shown in **Fig.2**. This frequency has a period of 11.45 microseconds. The flip flop **54** is arranged, for example, to be set and reset on rising edges of the clock signal input from the oscillator, so that each pulse driving one of the FETs **60, 62** has a duration of 11.45 microseconds, and so that sequential pulses are also separated to each FET are also separated by 11.45 microseconds.

Fig.6A to **Fig.6H**, are graphical views of signals which occurred simultaneously during the operation of the apparatus shown in **Fig.1** and **Fig.2**, when the input voltage applied was 75 volts. **Fig.6A** shows a first drive signal **100** driving FET **60**, which conducts to drive the right input coil **26**. **Fig.6B** shows a second drive signal **102**, driving FET **62**, which, when it conducts, provides the drive to the left input coil **28**.

Fig.6C and **Fig.6D** show voltage and current signals produced when the current driving the FETs **60, 62** is provided from a battery source. **Fig.6C** shows the level **104** of voltage V. While the nominal voltage of the battery was 75 volts, a decaying transient signal **106** is superimposed on this voltage each time one of the FETs **60, 62** is switched on. The specific pattern of this transient signal depends on the internal resistance of the battery, as well as on a number of characteristics of the magnetic generator **10**. Similarly, **Fig.6D** shows the current **106** flowing into FETs **60, 62** from the battery source. Since the signals **104, 106** show the effects of current flowing into both FETs **60, 62** the transient spikes are 11.45 microseconds apart.

Figs.6E to 6H, show the voltage and current levels measured at the output coils **29, 30**. **Fig.6E** shows a voltage output signal **108** of the right output coil **29**, while **Fig.6F** shows a voltage output signal **110** of the left output coil **30**. For example, the output current signal **116** of the right output coil **29** includes a first transient spike **112** caused when a pulse of current is generated in the left input coil **28** in order to boost the magnetic flux passing through the right magnetic path **18**, and a second transient spike **114** caused when the left input coil **28** is turned off as the right input coil **26** is being turned on. **Fig.6G** shows an output current signal **116** of the right output coil **29**, while **Fig.6H** shows an output current signal **118** of the left output coil **30**.

Fig.7 is a graphical view of output power measured using the electromagnetic generator **10** and eight levels of input voltage, varying from 10v to 75v. The oscillator frequency was retained at 87.5 KHz. The measured values are represented by points **120**, while the curve **122** is generated by polynomial regression, (a least squares fit).

Fig.8 is a graphical view of a coefficient of performance, defined as the ratio of the output power to the input power, for each of the measurement points shown in **Fig.7**. At each measurement point, the output power was substantially higher than the input power. Real power measurements were computed at each data point using measured voltage and current levels, with the results being averaged over the period of the signal. These measurements agree with RMS power measured using a Textronic THS730 digital oscilloscope.

While the electromagnetic generator **10** was capable of operation at much higher voltages and currents without saturation, the input voltage was limited to 75 volts because of voltage limitations of the switching circuits being used. Those familiar with electronics will understand that components for switching circuits capable of handling higher voltages are readily available for use in this application.

The experimentally-measured data were extrapolated to predict operation at an input voltage of 100 volts, with the input current being 140 mA, the input power being 14 watts, and with a resulting output power being

48 watts for each of the two output coils **29, 30**, at an average output current of 12 mA and an average output voltage of 4000 volts. This means that for each of the output coils **29, 30**, the coefficient of performance ("COP") would be 3.44.

While an output voltage of 4000 volts may be needed for some applications, the output voltage can also be varied through a simple change in the configuration of the electromagnetic generator **10**. The output voltage is readily reduced by reducing the number of turns in the output windings. If this number of turns is decreased from 450 to 12, the output voltage is dropped to 106.7, with a resulting increase in output current to 0.5 amps for each output coil **29, 30**, (i.e. 53 watts). In this way, the output current and voltage of the electromagnetic generator can be varied by varying the number of turns of the output coils **29, 30**, without making a substantial change in the output power, which is instead determined by the input current, which determines the amount of magnetic flux shuttled during the switching process.

All of the **C**oefficients **O**f **P**erformance were significantly greater than 1. These are plotted in **Fig.8** and they indicate that the output power levels measured in each of the output coils **29, 30** were substantially greater than the corresponding input power levels driving both of the input coils **26, 28**. Therefore, it is apparent that the electromagnetic generator **10** can be built in a self-powered form, as discussed above in reference to **Fig.1**. In the example of **Fig.1**, except for a brief application of power from the external power source **38** to start the process of power generation, the power required to drive the input coils **26, 28** is derived entirely from power developed within the right output coil **29**. If the power generated in the single output coil **29**, is more than sufficient to drive the input coils **26, 28**, an additional load **126** may be added to be driven with power generated in the output coil **29**. On the other hand, each of the output coils **29, 30** may be used to drive a portion of the input coil power requirements, for example, output coils 26 can provide the driving voltage V for FET **60** while output coil 28 can provide the driving voltage V for FET **62**.

Regarding thermodynamic considerations, it is noted that when the electromagnetic generator **10** is operating, it is an open system not in thermodynamic equilibrium. The system receives static energy from the magnetic flux of the permanent magnet. Because the electromagnetic generator **10** is self-switched without an additional energy input, the thermodynamic operation of the system is an open dissipative system, receiving, collecting, and dissipating energy from its environment; in this case, from the magnetic flux stored within the permanent magnet. Continued operation of the electromagnetic generator **10** causes demagnetisation of the permanent magnet. The use of a magnetic material including rare earth elements, such as a samarium cobalt material or a material including iron, neodymium, and boron is preferable within the present invention, since such a magnetic material has a relatively long life in this application.

Thus, an electromagnetic generator operating in accordance with the present invention should not be considered as a perpetual-motion machine, but rather as a system in which flux radiated from a permanent magnet is converted into electricity, which is used both to power the apparatus and to power an external load. This is analogous to a system including a nuclear reactor, in which a number of fuel rods radiate energy which is used to keep the chain reaction going and to heat water for the generation of electricity to drive external loads.

Fig.9 is a cross-sectional elevation of an electromagnetic generator **130** built in accordance with a second version of the first embodiment of the present invention. This electromagnetic generator **130** is generally similar in construction and operation to the electromagnetic generator **10** built in accordance with the first version of this embodiment, except that the magnetic core **132** of the electromagnetic generator **10** is built in two halves joined along lines **134**, allowing each of the output coils **135** to be wound on a plastic bobbin **136** before being placed over the legs **137** of the core **132**.

Fig.9 also shows an alternate placement of an input coil **138**. In the example of **Fig.1**, both of the input coils **26, 28** were placed on the upper portion of the magnetic core **16**, with these coils being configured to generate magnetic fields having north magnetic poles at the inner ends **31, 32** of the coils **26, 28**, with these north magnetic poles thus being closest to the end **14** of the permanent magnet **12** having its north magnetic pole. In the example of **Fig.9**, a first input coil **26** is as described above in reference to **Fig.1**, but the second input coil **138** is placed adjacent the south pole **140** of the permanent magnet **12**. This input coil **138** is configured to generate a south magnetic pole at its inner end **142**, so that, when input coil **138** is turned on, flux from the permanent magnet **12** is directed away from the left magnetic path **20** into the right magnetic path **18**.

Fig.10 and **Fig.11** show an electromagnetic generator **150** built in accordance with a first version of a second embodiment of the present invention, with **Fig.10** being a top view, and **Fig.11** being a front elevation. This electromagnetic generator **150** includes an output coil **152, 153** at each corner, and a permanent magnet **154** extending along each side between output coils. The magnetic core **156** includes an upper plate **158**, a lower plate **160**, and a square post **162** extending within each output coil **152, 153**. Both the upper plate **158** and the lower plate **160** include central apertures **164**.

Each of the permanent magnets **154** is oriented with a like pole, such as a north pole, against the upper plate **158**. Eight input coils **166, 168** are placed in positions around the upper plate **158** between an output coil **152, 153** and a permanent magnet **154**. Each input coil **166, 168** is arranged to form a magnetic pole at its end nearest to the adjacent permanent magnet **154** of the same polarity as the magnetic poles of the magnets **154** adjacent the upper plate **158**. Thus, the input coils **166** are switched on to divert the magnetic flux of the permanent magnets **154** from the adjacent output coils **152**, into magnetic paths through the output coils **153**. Then, the input coils **168** are switched on to divert magnetic flux of the permanent magnets **154** from the adjacent output coils **153**, with this flux being diverted into magnetic paths through the output coils **152**. Thus, the input coils form a first group of input coils **166** and a second group of input coils **168**, with these first and second groups of input coils being alternately energised in the manner described above in reference to **Fig.1** for the single input coils **26, 28**. The output coils produce current in a first train of pulses occurring simultaneously within coils **152** and in a second train of pulses occurring simultaneously within coils **153**.

Thus, driving current through input coils **166** causes an increase in flux from the permanent magnets **154** within the posts **162** extending through output coils **153** and a decrease in flux from the permanent magnets **154** within the posts **162** extending through output coils **152**. On the other hand, driving current through input coils **168** causes a decrease in flux from the permanent magnets **154** within the posts **162** extending through output coils **153** and an increase in flux from the permanent magnets **154** within the posts **162** extending through output coils **152**.

While the example of **Fig.10** and **Fig.11** shows all of the input coils **166,168** deployed along the upper plate **158**, it is understood that certain of these input coils **166, 168** could alternately be deployed around the lower plate **160**, in the manner generally shown in **Fig.9**, with one input coil **166**, **168** being within each magnetic circuit between a permanent magnet **154** and an adjacent post **162** extending within an output coil **152, 153**, and with each input coil **166, 168** being arranged to produce a magnetic field having a magnetic pole like the closest pole of the adjacent permanent magnet **154.**

Fig.12 is a top view of a second version **170** of the second embodiment of the present invention, which is similar to the first version thereof, which has been discussed in reference to **Fig.10** and **Fig.11**, except that an upper plate **172** and a similar lower plate (not shown) are annular in shape, while the permanent magnets **174** and posts **176** extending through the output coils **178** are cylindrical. The input coils **180** are oriented and switched as described above in reference to **Fig.9** and **Fig.10**.

While the example of **Fig.12** shows four permanent magnets, four output coils and eight input coils it is understood that the principles described above can be applied to electromagnetic generators having different numbers of elements. For example, such a device can be built to have two permanent magnets, two output coils, and four input coils, or to have six permanent magnets, six output coils, and twelve input coils.

In accordance with the present invention, material used for magnetic cores is preferably a nanocrystalline alloy, and alternately an amorphous alloy. The material is preferably in a laminated form. For example, the core material is a cobalt-niobium-boron alloy or an iron based magnetic alloy.

Also in accordance with the present invention, the permanent magnet material preferably includes a rare earth element. For example, the permanent magnet material is a samarium cobalt material or a combination of iron, neodymium, and boron.

While the invention has been described in its preferred versions and embodiments with some degree of particularity, it is understood that this description has been given only by way of example and that numerous changes in the details of construction, fabrication, and use, including the combination and arrangement of parts, may be made without departing from the spirit and scope of the invention.

CLAIMS:

1. An electromagnetic generator comprising: a permanent magnet having magnetic poles at opposite ends; a magnetic core including first and second magnetic paths between said opposite ends of said permanent magnet, wherein said magnetic core comprises a closed loop, said permanent magnet extends within said closed loop, and said opposite ends of said permanent magnet are disposed adjacent opposite sides of said closed loop and against internal surfaces of said magnetic core comprising said closed loop; a first input coil extending around a portion of said first magnetic path, a second input coil extending around a portion of said second magnetic path, a first output coil extending around a portion of said first magnetic path for providing a first electrical output; a second output coil extending around a portion of said second magnetic path for providing a second electrical output; and a switching circuit driving electrical current alternately through said first and second input coils, wherein said electrical current driven through said first input coil causes said first input coil to produce a magnetic field opposing a concentration of magnetic flux

from said permanent magnet within said first magnetic path, and said electrical current driven through said second input coil causes said second input coil to produce a magnetic field opposing a concentration of magnetic flux from said permanent magnet within said second magnetic path.

2. An electromagnetic generator comprising: a permanent magnet having magnetic poles at opposite ends; a magnetic core including first and second magnetic paths between said opposite ends of said permanent magnet, wherein said magnetic core comprises a closed loop, said permanent magnet extends within said closed loop, said opposite ends of said permanent magnet are disposed adjacent opposite sides of said closed loop, and a first type of pole of said permanent magnet is disposed adjacent a first side of said closed loop; a first input coil, disposed along said first side of said closed loop, extending around a portion of said first magnetic path, a second input coil, disposed along said first side of said closed loop, extending around a portion of said second magnetic path, a first output coil extending around a portion of said first magnetic path for providing a first electrical output; a second output coil extending around a portion of said second magnetic path for providing a second electrical output; and a switching circuit driving electrical current alternately through said first and second input coils, wherein said electrical current driven through said first input coil causes said first input coil to produce a magnetic field opposing a concentration of magnetic flux from said permanent magnet within said first magnetic path, and additionally causes said first input coil to produce a magnetic field having said first type of pole at an end of said first input coil adjacent said permanent magnet, and said electrical current driven through said second input coil causes said second input coil to produce a magnetic field opposing a concentration of magnetic flux from said permanent magnet within said second magnetic path, and additionally causes said second input coil to produce a magnetic field having said first type of pole at an end of said of said second input coil adjacent said permanent magnet.

3. An electromagnetic generator comprising: a permanent magnet having magnetic poles at opposite ends; a magnetic core including first and second magnetic paths between said opposite ends of said permanent magnet, wherein said magnetic core comprises a closed loop, said permanent magnet extends within said closed loop, and said opposite ends of said permanent magnet are disposed adjacent opposite sides of said closed loop, a first type of pole of said permanent magnet is disposed adjacent a first side of said closed loop, and a second type of pole, opposite said first type of pole, of said permanent magnet is disposed adjacent a second side of said closed loop; a first input coil extending around a portion of said first magnetic path, wherein said first input coil is disposed along said first side of said closed loop; a second input coil extending around a portion of said second magnetic path wherein said second input coil is disposed along said second side of said closed loop; a first output coil extending around a portion of said first magnetic path for providing a first electrical output; a second output coil extending around a portion of said second magnetic path for providing a second electrical output; and a switching circuit driving electrical current alternately through said first and second input coils, wherein said electrical current driven through said first input coil causes said first input coil to produce a magnetic field opposing a concentration of magnetic flux from said permanent magnet within said first magnetic path, and additionally causes said first input coil to produce a magnetic field having said first type of pole at an end of said first input coil adjacent said permanent magnet, and said electrical current driven through said second input coil causes said second input coil to produce a magnetic field opposing a concentration of magnetic flux from said permanent magnet within said second magnetic path, and additionally causes said second input coil to produce a magnetic field having said second type of pole at an end of said of said second input coil adjacent said permanent magnet.

4. An electromagnetic generator comprising: a permanent magnet having magnetic poles at opposite ends; a magnetic core including first and second magnetic paths between said opposite ends of said permanent magnet; a first input coil extending around a portion of said first magnetic path, a second input coil extending around a portion of said second magnetic path, a first output coil extending around a portion of said first magnetic path for providing a first electrical output; a second output coil extending around a portion of said second magnetic path for providing a second electrical output; and a switching circuit driving electrical current alternately through said first and second input coils, wherein said electrical current driven through said first input coil causes said first input coil to produce a magnetic field opposing a concentration of magnetic flux from said permanent magnet within said first magnetic path, and wherein said electrical current driven through said second input coil causes said second input coil to produce a magnetic field opposing a concentration of magnetic flux from said permanent magnet within said second magnetic path, wherein a portion of electrical power induced in said first output coil provides power to drive said switching circuit.

5. The electromagnetic generator of claim 4, wherein said switching circuit is driven by an external power source during a starting process and by power induced in said first output coil during operation after said starting process.

6. The electromagnetic generator of claim 2, wherein said magnetic core is composed of a nanocrystalline magnetic alloy.

7. The electromagnetic generator of claim 6, wherein said nanocrystalline magnetic alloy is a cobalt-niobium-boron alloy.

8. The electromagnetic generator of claim 6, wherein said nanocrystalline magnetic alloy is an iron-based alloy.

9. The electromagnetic generator of claim 2, wherein said changes in flux density within said magnetic core occur without driving said magnetic core to magnetic saturation.

10. The electromagnetic generator of claim 2, wherein said switching circuit drives said electrical current through said first input coil in response to a first train of pulses, said switching circuit drives said electrical current through said second input coil in response to a second train of pulses, alternating with pulses within said first train of pulses, and said pulses in said first and second trains of pulses are approximately 11.5 milliseconds in duration.

11. The electromagnetic generator of claim 2, wherein said permanent magnet is composed of a material including a rare earth element.

12. The electromagnetic generator of claim 11, wherein said permanent magnet is composed essentially of samarium cobalt.

13. The electromagnetic generator of claim 11, wherein said permanent magnet is composed essentially of iron, neodymium, and boron.

14. An electromagnetic generator comprising: a magnetic core including a pair of spaced-apart plates, wherein each of said spaced-apart plates includes a central aperture, and first and second pluralities of posts extending between said spaced-apart plates; a plurality of permanent magnets extending individually between said pair of spaced-apart plates and between adjacent posts within said plurality of posts, wherein each permanent magnet within said plurality of permanent magnets has magnetic poles at opposite ends, wherein all magnets within said plurality of magnets are oriented to produce magnetic fields having a common direction; first and second pluralities of input coils, wherein each input coil within said first and second pluralities of input coils extends around a portion of a plate within said spaced-apart plates between a post in said plurality of posts and a permanent magnet in said plurality of permanent magnets; an output coil extending around each post in said first and second pluralities of posts for providing an electrical output; a switching circuit driving electrical current alternatively through said first and second pluralities of input coils, wherein said electrical current driven through each input coil in said first plurality of input coils causes an increase in magnetic flux within each post within said first plurality of posts from permanent magnets on each side of said post and a decrease in magnetic flux within each post within said second plurality of posts from permanent magnets on each side of said post, and wherein said electrical current driven through input coil in said second plurality of input coils causes a decrease in magnetic flux within each post within said first plurality of posts from permanent magnets on each side of said post and an increase in magnetic flux within each post within said second plurality of posts from permanent magnets on each side of said post.

15. The electromagnetic generator of claim 14, wherein each input coil extends around a portion of a magnetic path through said magnetic core between said opposite ends a permanent magnet adjacent said input coil, said magnetic path extends through a post within said magnetic core adjacent said input coil, and driving electrical current through said input coil causes said input coil to produce a magnetic field opposing a concentration of magnetic flux within said magnetic path.

16. The electromagnetic generator of claim 14, wherein said switching circuit is driven by an external power source during a starting process and by power induced in said output coils during operation after said starting process.

17. The electromagnetic generator of claim 14, wherein said magnetic core is composed of a nanocrystalline magnetic alloy.

18. The electromagnetic generator of claim 2, wherein a portion of electrical power induced in said first output coil provides power to drive said switching circuit.

19. The electromagnetic generator of claim 18, wherein said switching circuit is driven by an external power source during a starting process and by power induced in said first output coil during operation after said starting process.

20. The electromagnetic generator of claim 3, wherein a portion of electrical power induced in said first output coil provides power to drive said switching circuit.

21. The electromagnetic generator of claim 20, wherein said switching circuit is driven by an external power source during a starting process and by power induced in said first output coil during operation after said starting process.

22. The electromagnetic generator of claim 3, wherein said magnetic core is composed of a nanocrystalline magnetic alloy.

23. The electromagnetic generator of claim 22, wherein said nanocrystalline magnetic alloy is a cobalt-niobium-boron alloy.

24. The electromagnetic generator of claim 22, wherein said nanocrystalline magnetic alloy is an iron-based alloy.

25. The electromagnetic generator of claim 3, wherein said changes in flux density within said magnetic core occur without driving said magnetic core to magnetic saturation.

26. The electromagnetic generator of claim 3, wherein said switching circuit drives said electrical current through said first input coil in response to a first train of pulses, said switching circuit drives said electrical current through said second input coil in response to a second train of pulses, alternating with pulses within said first train of pulses, and said pulses in said first and second trains of pulses are approximately 11.5 milliseconds in duration.

27. The electromagnetic generator of claim 3, wherein said permanent magnet is composed of a material including a rare earth element.

28. The electromagnetic generator of claim 27, wherein said permanent magnet is composed essentially of samarium cobalt.

29. The electromagnetic generator of claim 27, wherein said permanent magnet is composed essentially of iron, neodymium, and boron.

US Patent 5,568,005 22nd October 1996 Inventor: Dan A. Davidson

ACOUSTIC-MAGNETIC POWER GENERATOR

Please note that this is a re-worded excerpt from this patent. If the content interests you, then you should obtain a full copy via the www.freepatentsonline.com web site. This patent describes an electrical device very similar to the MEG device, capable of powering itself while powering additional external items of equipment.

ABSTRACT

The Acoustic Magnetic Field Power Generator uses an acoustic signal focused into a permanent magnet to stimulate the nuclear structure of the magnet to cause the magnetic field of the permanent magnet to move or oscillate. This effect can be used to tap power from the oscillating magnetic field by putting a coil of wire in the oscillating field. When an alternating current signal generator is connected simultaneously to an acoustic transducer and a stimulating coil; whereby, both the acoustic transducer and the stimulating coil are located within the magnetic field of the magnet, the acoustic signal enhances the stimulating effect to the permanent magnet transformer. The acoustic transducer can be any acoustic generation device such as a piezoelectric, magnetostrictive, or other acoustic transducer. The combined effect of the acoustic signal and the stimulating coil increases the efficiency of permanent magnet induction transformers.

BACKGROUND OF THE INVENTION

The present invention relates to a solid state electrical generator having no moving parts. More particularly, the invention makes use of a new method of stimulating the nuclear material of a permanent magnet so that the electronic structure of the atom will vibrate and thus cause the magnetic field of the permanent magnet to oscillate. It is a well-known fact that an oscillating magnetic field will induce electrical current in a coil as was discovered by Michael Faraday in the last century. What is new in this invention, is the discovery of the ability of an acoustic field to stimulate the nuclear structure of a material to cause the electrons to wobble under the influence of the acoustic field. If the material is magnetic or temporarily magnetised by an external magnetic field then the magnetic field will vibrate under the stimulus of the acoustic field. If this effect is combined with a coil which is simultaneously stimulating the magnet then the efficiency of stimulating the permanent magnet's field is enhanced. If a pickup coil is placed in the oscillating magnetic field so as to create an induction transformer then the combination of the acoustic and magnetic stimulation will enhance the efficiency of the induction transformer.

The most relevant prior art known to the inventor comprises U.S. Pat. No. 4,904,926 (1990) to Mario Pasichinsky, entitled Magnet Motion Electrical Generator; and U.S. Pat. No. 4,077,001 (1978) to Frank Richardson, entitled Electromagnetic Converter With Stationary Variable-Reluctance Members; and U.S. Pat. No. 4,006,401 (1977) to de Rivas, entitled Electromagnetic Generator.

The above references to Pasichinsky, Richardson, and de Rivas, all use inductive methods to stimulate the motion of a permanent magnetic field. In the de Rivas invention, ‘Electromagnetic Generator’, the flux of the permanent magnet is "alternated by switching" using inductive coupling. In the Richardson disclosure an "energy conversion system" the flux of the permanent magnet is also "shifted" by inductive means. In the Pasichinsky disclosure, alternating magnetic coils induce flux changes in a closed magnetic circuit and output coils attached to the circuit are induced by the changing flux to produce a magnetic field. All of these devices are essentially variations of transformer design with permanent magnets as part of the transformer cores and all use magnetic induction. The transformer aspect of these references is the use of permanent magnets as the transformer core with coils wrapped around the magnetic core which are energised to produce oscillation or movement of the permanent magnet's field. The above references will, in this document, be called "permanent magnet transformers".

Other prior art relevant to the invention are U.S. Pat. No. 2,101,272 (1937) to H. J. Scott, entitled Combined Magnetostriction and Piezoelectric Selective Device; and U.S. Pat. No. 2,636,135 (1953) to R. L. Peek, Jr. entitled Stress Coupled Core and Crystal Transformer, and U.S. Pat. No. 2,834,943 (1958) to R. O. Grisdale, etal entitled Mechanically Coupled Electromechanical and Magnetomechanical Transducers, and U.S. Pat. No. 3,246,287 (1966) to H. F. Benson entitled Piezoelectric Transformer, and U.S. Pat. No. 3,261,339 (1966) to H. P. Quinn entitled Magnetostrictive Transformer, and U.S. Pat. No. 3,274,406 (1966) to H. S. Sommers, Jr. entitled Acoustic Electromagnetic Device, and U.S. Pat. No. 3,309,628 (1967) to F. A. Olson entitled YIG Variable Acoustic Delay Line, and U.S. Pat. No. 3,457,463 (1969) to L. Balamuth entitled Method and Apparatus for Generating Electric Currents of Small Magnitude, and U.S. Pat. No. 4,443,731 (1984) to Butler et al. entitled Hybrid Piezoelectric and

Magnetostrictive Acoustic Wave Transducer, and U.S. Pat. No. 4,552,071 (1985) to R. B. Thompson entitled Method and Apparatus for Measuring Stress.

The reference to Peek cited above, takes advantage of the difference in operation of piezoelectric and magnetostrictive crystals to produce a response in one when stimulated by the other. The Peek patent does not use an acoustic wave to stimulate a permanent magnet as in the present invention.

The reference to Sommers cited above, is a transducer which uses a conductive bar or tube, which supports relatively slow helicon waves, placed next to a piezoelectric or magnetostrictive crystal. The transducer is designed in such a way as to either enhance the acoustic wave or the electric wave by interaction of the two materials. The Sommers patent does not use an acoustic wave to stimulate a permanent magnet to enhance to oscillation of the magnetic field as the present invention does.

The reference to Balmuth cited above, uses mechanically resonant reeds, rods, or chambers which are coupled to transducers that are piezoelectric, magnetostrictive, or transistorised. The electrical output of the transducers stimulates an electrical circuit when the resonator receives acoustic energy and again does not use an acoustic wave to stimulate a permanent magnet to enhance to oscillation of the magnetic field as the present invention does.

The reference to Olson cited above, uses an acoustically responsive material such as a piezoelectric or a magnetostrictive to act as a delay line for microwave signals and again does not use an acoustic wave to stimulate a permanent magnet to enhance to oscillation of the magnetic field as the present invention does.

The references to Benson, Quinn, Grisdale, Scott, and Butler cited above, are all concerned with acoustic transducers which convert acoustic pressure to an electrical signal or vice versa using only the piezoelectric and/or the magnetostrictive effect. The Benson patent is an underwater acoustic transformer which converts acoustic waves hitting a transducer into an electromagnetic field which excites a transformer. The Quinn patent uses a magnetostrictive effect to stimulate piezoelectric crystals to output a high voltage which is a reverse of the Benson patent. The Grisdale patent uses mechanically stacked piezoelectric or magnetostrictive crystals to produce a more efficient mechanical gyrator. The Scott patent uses and electrical oscillator to stimulate magnetostrictive rods which put pressure on piezoelectric crystals to output a high voltage from the piezoelectric crystals. The Butler patent uses a combined effect of piezoelectric and magnetostrictive crystals to produce an enhanced acoustic energy detector.

The reference to Thompson cited above, uses a permanent magnetic transducer to induce eddy currents in metal which is in the field of the transducer or uses moving eddy currents in a piece of metal to stimulate a magnetic field. The induction of the eddy currents is the result of an oscillating magnetic field generated in the transducer.

None of the references cited above, use an acoustic wave to stimulate the atoms of a permanent magnet and hence are not related to this invention.

SUMMARY OF THE INVENTION

An object of this invention is to provide a power generator with no moving parts.

Another object of this invention is to use an acoustic field to stimulate the nuclear level of the magnetic material and provide a method of oscillating the magnetic field of permanent magnets.

Another object of this invention is to provide a simple method of generating electrical energy by including a piezoelectric transducer which is used to vibrate the magnetic field of a permanent magnet. When the nucleus of the atom is vibrated by the piezoelectric, it in turn, vibrates the electronic structure of all the atoms. Since the electronic structure is the basis of the magnetic field of the magnet then the entire magnetic field of the magnet is vibrated when the electronic structure is vibrated. Coils placed in the vibrating magnetic field will have voltage and current induced in them.

It is a well established fact, that when the magnetic field of a permanent magnet is vibrated, it is possible to generate an alternating current in a coil winding placed within the vibrating magnetic field. What is unique about this invention, is to increase the efficiency of permanent magnet transformers by using acoustic stimulation from piezoelectrics to further stimulate the permanent magnet so as to add to the inductive effects of permanent magnet transformers. This invention does this by stimulating the permanent magnet cores of permanent magnet transformers with an acoustic field generated by a piezoelectric or other acoustically active generator which is vibrated at the same frequency as the electrical induction of the permanent magnet transformers.

BRIEF DESCRIPTION OF THE DRAWINGS

FIG.1 illustrates a frequency signal generator attached to and driving a piezoelectric transducer which is in the acoustic proximity of a bar type of permanent magnet with a output coil placed within the magnetic field of the permanent magnet.

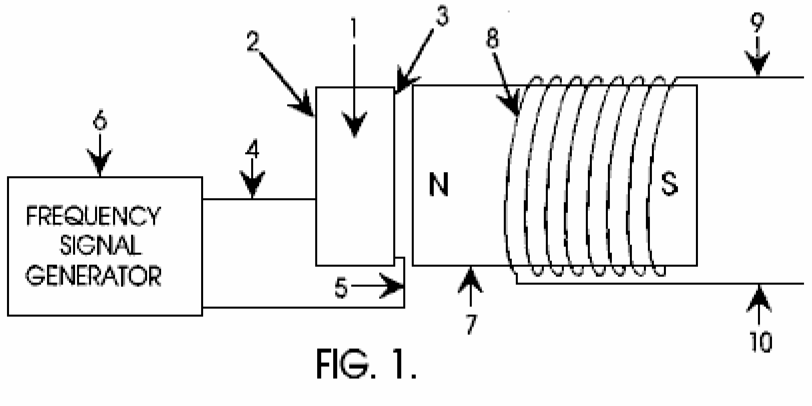

FIG. 1.

Fig.2 illustrates a frequency signal generator attached to and driving a piezoelectric transducer which is in the acoustic proximity of a torroidal type of permanent magnet with an output coil wrapped around the torroidal permanent magnet.

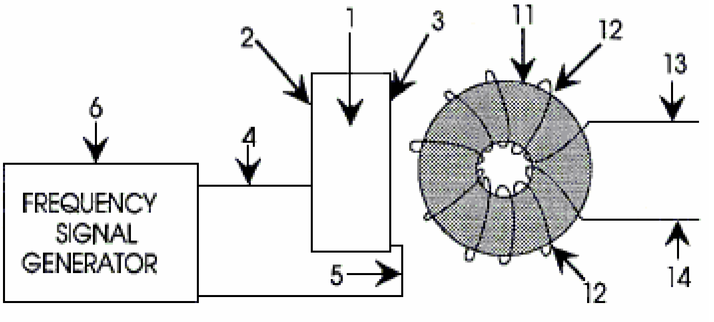

FIG. 2.

Fig.3 illustrates a frequency signal generator attached to and driving a piezoelectric transducer which is in the acoustic proximity of a torroidal type of permanent magnet transformer and the signal generator is also driving the input coil of the torroidal permanent magnet transformer.

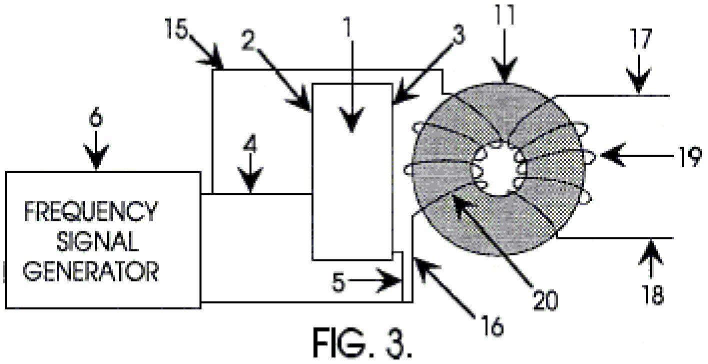

FIG. 3.

Fig.4 illustrates a frequency signal generator attached to and driving two torroidal core permanent magnet transformers as well as an acoustic transducer that is in acoustic proximity of the torroidal cores.

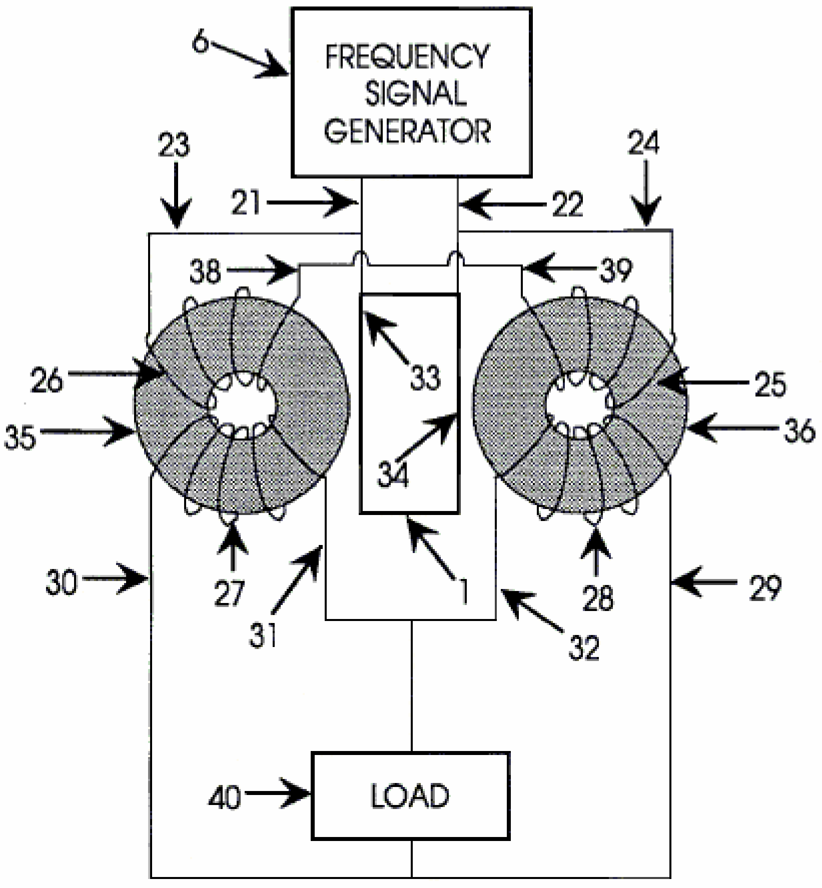
6
FREQUENCY SIGNAL GENERATOR
23
24
21
22
38
39
33
26
25
35
36
34
27
28
30
29
31
1
32
40
LOAD

FIG. 4.

DETAILED DESCRIPTION OF THE INVENTION

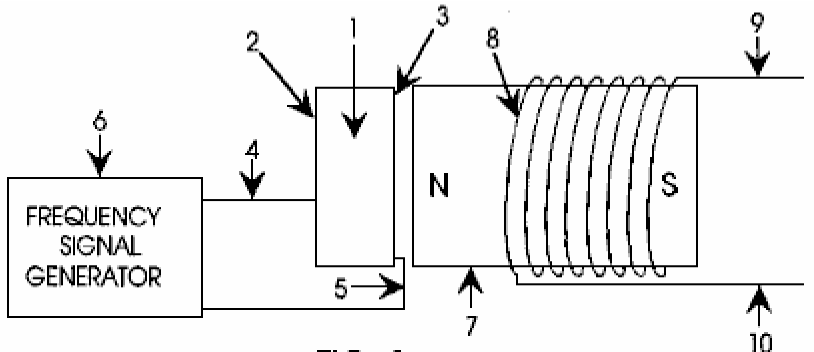

FIG. 1.

In **Fig.1**, a frequency signal generator **6** is connected to a piezoelectric transducer **1** via wires **4** and **5** connected to the electrode surfaces of the piezoelectric transducer **2** and **3** respectively. The piezoelectric transducer **1** is made from a high dielectric material such as barium titanate or lead zirconate titanate or any other acoustic transducer material suitable for sonic and ultrasonic generators. The piezoelectric transducer **1** is placed in close proximity to the permanent magnet **7** such that the acoustic field of the piezoelectric transducer **1** can radiate into the permanent magnet material. A permanent magnet transformer shown as coil **8** is positioned in the magnetic field of the permanent magnet **7**. When the piezoelectric transducer **1** is stimulated by the frequency generator **6** then a voltage and current is generated between the output leads **9** and **10** of the permanent magnet transformer.

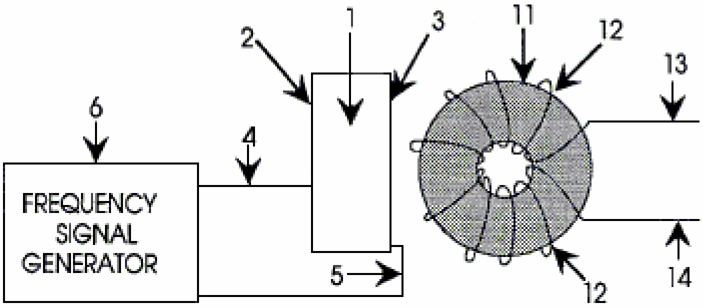

FIG. 2.

Another embodiment of this invention is shown in **Fig.2**. which is similar to **Fig.1**, with a similar frequency signal generator **6** connected to a piezoelectric material **1** via wires **4** and **5** connected to the electrode surfaces of the piezoelectric transducer **2** and **3**. The piezoelectric transducer **1** is as defined above, that is to say that it is constructed from a material suitable for sonic and ultrasonic generators. The piezoelectric transducer **1** is placed in close proximity to the permanent magnet **11** so that the acoustic field of the piezoelectric transducer **1** can radiate into the permanent magnet material. A permanent magnet transformer shown as coil **12** is placed in the magnetic field of the permanent magnet **11**. When the piezoelectric transducer **1** is stimulated by the frequency generator **6** then a voltage and current is generated between the output leads **13** and **14** of the above defined magnetic transformer.

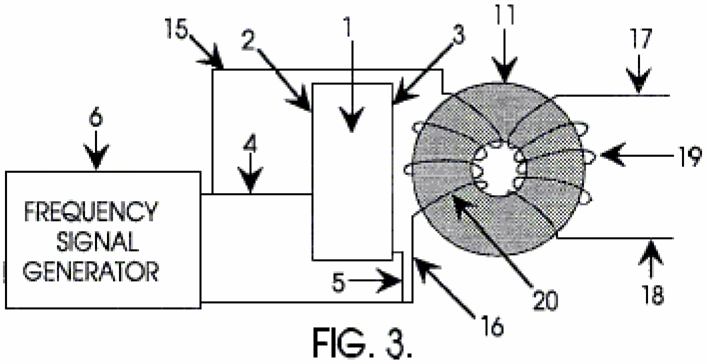

FIG. 3.

Fig.3 is similar to **Fig.1** and **Fig.2** with a frequency signal generator **6** connected to a piezoelectric transducer **1** via wires **4** and **5** connected to the electrode surfaces **2** and **3** of the piezoelectric transducer. The piezoelectric transducer **1** is as defined in the descriptions above. The signal generator **6** is also connected to the input coil **20**

of the permanent magnet transformer defined by the torroidal permanent magnet core **11**, input coil **20** and output coil **19**. The piezoelectric transducer **1** is placed in close proximity to the permanent magnet **11** so that the acoustic field of the piezoelectric transducer **1** can radiate into the permanent magnet material. The magnetic transformer defined by **11**, **19**, and **20** is in the magnetic field of the permanent magnet **11** and is connected to the frequency signal generator **6** via wires **15** and **16**. The frequency generator **6** stimulates the piezoelectric transducer **1** which stimulates the permanent magnet transformer via the acoustic field and at the same time the signal generator also stimulates the coil electromagnetically. A voltage and current is generated at the output coil **19** and power can be taken from the output wires **17** and **18** of the magnetic transformer.

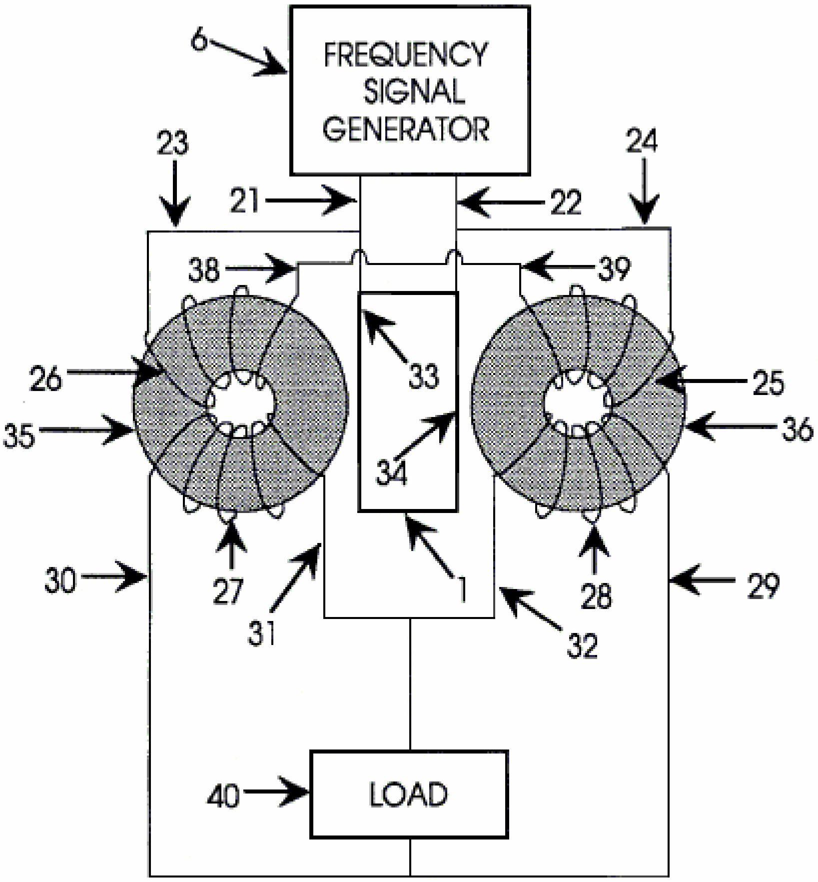

FIG. 4.

A further embodiment of this invention, shown in **Fig.4**, is a frequency signal generator **6** driving a pair of permanent magnet transformers defined by **26, 35, 27** and **25, 36, 28** respectively, also driving a piezoelectric transducer **1**. The piezoelectric transducer is as described above. The signal generator is connected via input wires **23** and **24** to the input coil **26** of the permanent magnet transformer on the left and to the input coil **25** of the transformer on the right respectively. The other input wire **38** of the left permanent magnet transformer is connected to the remaining input wire **39** of the right magnetic transformer. The output of the signal generator in also connected to the piezoelectric transducer **1** via connections **21** and **22** to the connector surface of the piezoelectric **33** and **34** respectively. The output of the permanent magnet transformer on the left is connected to a load **40** via wire **30** and the output of the permanent magnet transformer on the right is connected to the load via wire **29**. The remaining output wires **31** and **32** of the left and right permanent magnet transformers are also connected to the load. The load **40** can be anything such as a motor or electrical lights or any appliance.

This invention is not limited to the 4 different versions of the invention shown in **Figs. 1, 2, 3**, and **4** as there are any number of cascading and electrical hook-up techniques that can be accomplished to amplify power and to take advantage of the acoustic influence of the piezoelectric upon the magnetic material. Similarly, this invention is not limited to the torroidal core configuration as there can be many types of permanent magnet transformers with any number of magnetic core and coil configurations that can be enhanced with acoustic stimulation depending on power and output requirements according to the rules of electronics and those familiar with the state of the art in permanent magnet power transformers.

CLAIMS

1. An acoustic magnetic power generator composed of an alternating current signal generator connected to an acoustic transducer which stimulates the core of a permanent magnet such that the atoms of the magnet are caused to vibrate which in turn causes the magnetic field to vibrate and causes a current and voltage to be generated in an output coil wrapped around a permanent magnet or in the magnetic field of the permanent magnet which said current and voltage can be used for powering a load.

2. An acoustic magnetic power generator composed of an alternating signal generator connected to an acoustic transducer which stimulates the core of a permanent magnet and causes the core to vibrate; the signal generator further connected to a drive coil surrounding the permanent magnet, and an output coil within the field of the permanent magnet which by induction generates an electrical output.

3. A method of causing the magnetic field of permanent magnet transformers to oscillate by the application of an acoustic signal applied to the atomic structure of permanent magnet.

4. A method of maximising the efficiency of permanent magnet transformers by stimulating the core material of the permanent magnet transformers with both an acoustic vibration and an electromagnetic signal simultaneously.

United States Patent 6,545,444 8th April 2003 Inventor: John C. Bedini

DEVICE AND METHOD FOR UTILISING A MONOPOLE MOTOR TO CREATE BACK-EMF TO CHARGE BATTERIES

Please note that this is a re-worded excerpt from this patent. It describes a self-contained device which can charge an external battery or battery bank.

ABSTRACT

A back EMF monopole motor and method using a rotor containing magnets all of the same polarity and in a monopole condition when in momentary apposition with a magnetised pole piece of a stator having the same polarity, the stator being comprised of a coil with three windings: a power-coil winding, a trigger-coil winding, and a recovery-coil winding. The back EMF energy is rectified using a high voltage bridge, which transfers the back EMF energy to a high voltage capacitor for storage in a recovery battery. The stored energy can then be discharged across the recovery battery through the means of a contact rotor switch for further storage.

DESCRIPTION

Technical Field:

The invention relates generally to the capturing of available electromagnetic energy using a device and method for creating an electromagnetic force (‘EMF’) and then using the available stored energy for recycling into the system as stored energy. The method of creating back EMF is the result of coupling/uncoupling a coil to a voltage source.

Background:

The operation of present day normal magnetic motors, has the rotor pole attracting the stator pole, resulting in the generation of mechanical power from the magnets to the rotor and flywheel. During this phase, energy flows from the magnetics to the rotor/flywheel and is stored as kinetic energy in the increased rotation. A rotor pole leaving a stator pole and creating a condition of "drag" results in power having to be put back into the magnetic section by the rotor and flywheel to forcibly overcome the drag. In a perfect, friction-free motor, the net force field is therefore referred to as "most conservative". A most conservative EMF motor has maximum efficiency. Without extra energy continually fed to the motor, no net work can be done by the magnetic field, since half the time the magnetic field adds energy to the load (the rotor and flywheel) and the other half of the time it subtracts energy from the load (the rotor and flywheel). Therefore, the total net energy output is zero in any such rotary process without additional energy input. To use a present day magnetic motor, continuous energy must be fed to the motor to overcome drag and to power the motor and its load.

Motors and generators presently in use, all use such conservative fields and therefore, have internal losses. Hence, it is necessary to continually input all of the energy that the motor outputs to the load, plus more energy to cover losses inside the motor itself. EMF motors are rated for efficiency and performance by how much energy "input" into the motor actually results in "output" energy to the load. Normally, the Coefficient of Performance (‘COP’) rating is used as a measure of efficiency. The COP is the actual output energy going into the load and powering it, divided by the energy that must be input into the device with its motor/load combination. If there were zero internal losses in a motor, that "perfect" motor would have a COP equal to 1.0. That is, all energy input into the motor would be output by the motor directly into the load, and none of the input energy would be lost or dissipated in the motor itself.

In magnetic motor generators presently in use, however, due to friction and design flaws, there are always internal losses and inefficiencies. Some of the energy input into the motor is dissipated in these internal losses. As a consequence, the energy that gets to the load is always less than the input energy. So a standard motor operates with a COP of less than 1.0, which is expressed as COP<1.0. An inefficient motor may have a COP of 0.4 or 0.45, while a specially designed and highly efficient motor may have a COP of 0.85.

The conservative field inside of a motor itself is divided into two phases. Producing a conservative field involves net symmetry between the "power out" phase from the magnetics to the rotor/flywheel and the "power back in" phase from the rotor/flywheel back to the magnetics. That is, the two flows of energy are identical in magnitude but opposite in direction. Each phase alone is said to be "asymmetrical", that is, it either has: 1) a net energy flow out to the rotor/flywheel; or 2) a net energy flow back into the magnetics from the rotor/flywheel. In simplified terms, it is referred to as "power out" and "power back in" phases with respect to the motor magnetics.

For the power-out phase, energy is derived from the EMF existing between the stator pole and incoming rotor pole in an attraction mode. In this phase, the rotary motion (angular momentum and kinetic energy) of the rotor and flywheel is increased. In short, power is added to the rotor/flywheel (and thus to the load) from the fields between stator pole and rotor pole (the electromagnetic aspects of the system).

For the "power back in" phase, energy must be fed back into the magnetics from the rotor and flywheel (and the load) to overcome the drag forces existing between stator pole and outgoing rotor pole. In this phase, energy is returned to the internal magnetic system from the rotary motion of the rotor and flywheel (the angular momentum, which is the rotational energy multiplied by time). As is well known in physics, a rotor/flywheel's angular momentum provides a convenient way to store energy with the spinning rotor/flywheel mass acting as an energy reservoir.

Most present day conventional magnetic motors use various methods for overcoming and partially reversing back EMF. Back EMF may be defined as the return pulse from the coil out of phase and is the result of re-gauging, which is the process of reversing the magnetics polarity, that is, form North to South, etc. The back EMF is shorted out and the rotor is attracted back in, therefore eliminating drag. This can be accomplished by pouring more energy in, which overpowers the back EMF, thereby producing a forward EMF in that region. The energy required for this method is furnished by the operator.

It is well known that changing the voltage alone creates a back EMF and requires no work. This is because to change the potential energy does not require changing the form of that potential energy, but only its magnitude. Work is the changing of the form of energy. Therefore, as long as the form of the potential energy is not changed, the magnitude can be changed without having to perform work in the process. The motor of the present invention takes advantage of this permissible operation to create back EMF asymmetrically, and thereby change its own usable available potential energy.

In an electric power system, the potential (voltage) is changed by inputting energy to do work on the internal charges of the generator or battery. This potential energy is expended within the generator (or battery) to force the internal charges apart, forming a source dipole. Then the external closed circuit system connected to that source dipole ineptly pumps the spent electrons in the ground line back through the back EMF of the source dipole, thereby scattering the charges and killing the dipole. This shuts off the energy flow from the source dipole to the external circuit. As a consequence of this conventional method, it is a requirement to input and replace additional energy to again restore the dipole. The circuits currently utilised in most electrical generators have been designed to keep on destroying the energy flow by continually scattering all of the dipole charges and terminating the dipole. Therefore, it is necessary to keep on inputting energy to the generator to keep restoring its source dipole.

A search of prior art failed to reveal any monopole motor devices and methods that recycle available energy from back EMF to charge a battery or provide electrical energy for other uses as described in the present invention. However, the following prior art patents were reviewed:
U.S. Pat. No. 4,055,789 to Lasater, Battery Operated Motor with Back EMF Charging.
U.S. Pat. No. 2,279,690 to Z. T. Lindsey, Combination Motor Generator.

SUMMARY OF THE INVENTION

An aspect of the device and method of the present invention is a new monopole electromagnetic motor that captures back EMF energy. The captured back EMF energy may be used to charge or store electrical energy in a recovery battery. The amount of energy recoverable, as expressed in watts, is dependent upon the configuration, circuitry, switching elements and the number and size of stators, rotors, magnets and coils which comprise the motor.

The motor uses a small amount of energy from a primary battery to "trigger" a larger input of available energy by supplying back EMF, thus increasing the potential energy of the system. The system then utilises this available potential energy to reduce, or reverse, the back EMF, thereby increasing the efficiency of the motor and, therefore, the COP.

If the energy in phase 1 (the power-out phase) is increased by additional available energy in the electromagnetics themselves, then the energy in phase 1 can be made greater than the energy in phase 2 (the power-back-in phase) without the operator furnishing the energy utilised. This produces a non-conservative nett field. Nett power can then be taken from the rotating stator and flywheel, because the available energy added into the stator and flywheel by the additional effects, is transformed by the rotor/flywheel into excess angular momentum and stored as such. Angular momentum is conserved at all times, but now, some of the angular momentum added to the flywheel, is evoked by additional effects in the electromagnetics, rather than being furnished by the operator.

That is, the motor is designed to deliberately create a back EMF itself, and thus increase its potential energy, thereby retaining each extra force for a period of time and applying it to increase the angular momentum and kinetic energy of the rotor and flywheel. Specifically, this back EMF energy with its nett force is deliberately applied in the motor of the present invention to overcome and even reverse the conventional drag-back (the back EMF). Hence, less energy needs to be taken from the rotor and flywheel to overcome the reduced back EMF, and in the ideal case, none is required since the back EMF has been overpowered and converted to forward EMF by the back EMF energy and force. In the motor, the conventional drag section of the magnetics becomes a forward-EMF section and now adds energy to the rotor/flywheel instead of reducing it. The important feature is that the operator only pays for the small amount of energy necessary to trigger the back EMF from the primary battery, and does not have to furnish the much larger back EMF energy itself.

Thus, when the desired energy in phase 1 (the power-out phase) is made greater than the undesired drag energy in phase 2, then part of the output power normally taken from the rotor and flywheel by the fields in phase 2, is not required. Hence, in comparison to a system without special back EMF mechanisms, additional power is available from the rotor/flywheel. The rotor therefore maintains additional angular momentum and kinetic energy, compared to a system which does not produce back EMF itself. Consequently, the excess angular momentum retained by the rotor and flywheel can be utilised as additional shaft power to power an external load.

In this motor, several known processes and methods are utilised. These allow the motor to operate periodically as an open dissipative system (receiving available excess energy from back EMF) far from thermodynamic equilibrium, whereby it produces and receives its excess energy from a known external source.

A method is utilised to temporarily produce a much larger source of available external energy around an energised coil. Design features of this new motor provide a device and method that can immediately produce a second increase in that energy concurrently as the energy flow is reversed. Therefore, the motor is capable of producing two asymmetrical back EMFs, one after the other, of the energy within a single coil, which dramatically increases the energy available and causes that available excess energy to then enter the circuit as impulses which are collected and utilised.

The motor utilises this available excess back EMF energy to overcome and even reverse the drag EMF between stator pole and rotor pole, while furnishing only a small trigger pulse of energy from a primary battery necessary to control and activate the direction of the back EMF energy flow.

By using a number of such dual asymmetrical self back EMFs for every revolution of the rotor, the rotor and flywheel collectively focus all the excess impulsive inputs into increased angular momentum (expressed as energy multiplied by time), shaft torque, and shaft power.

Further, some of the excess energy deliberately generated in the coil by the utilisation of the dual process manifests in the form of excess electrical energy in the circuit and can be utilised to charge a recovery battery or batteries. The excess energy can also be used to power electrical loads or to power the rotor and flywheel, with the rotor/flywheel also furnishing shaft horsepower for powering mechanical loads.

The motor utilises a means to furnish the relatively small amount of energy from a primary battery to initiate the impulsive asymmetrical self back EMF actions. Then part of the available excess electrical power drawn off from back EMF created energy is utilised to charge a recovery battery with dramatically increased over-voltage pulses.

Design features of this monopole motor utilise one magnetic pole of each rotor and stator magnet. The number of impulsive self-back EMF in a single rotation of the rotor is doubled. Advanced designs can increase the number of self-back EMFs in a single rotor rotation with the result that there is an increase in the number of impulses per rotation, which increase the power output of this new motor.

The sharp voltage spike produced in the coil of this monopole motor by the rapidly collapsing field in the back EMF coil is connected to a recovery battery(s) in charge mode and to an external electrical load. The nett result is that the coil asymmetrically creates back EMF itself in a manner which adds available energy and impulse to the circuit. The available energy collected in the coil is used to reverse the back-EMF phase of the stator-rotor fields to a forward EMF condition, with the impulses adding acceleration and angular momentum to the rotor and flywheel. The available back EMF energy collected in the coil is used to charge a battery. Loads can then be driven by the battery.

A device and method in which the monopole motor alters the reaction cross section of the coils in the circuit, which briefly changes the reaction cross section of the coil in which it is invoked. Thus, since this new motor uses only a small amount of current in the form of a triggering pulse, it is able to evoke and control the immediate change of the coil's reaction cross section to this normally wasted energy-flow component. As a result, the motor captures and directs some of this usually wasted available environmental energy, collecting the available excess energy in the coil and then releasing it for use in the motor. Through timing and switching, the innovative gate design of this new motor directs the available excess energy so that it overcomes and reverses the return EMF of the rotor-stator pole combination during what would normally be the back EMF and demonstrates the creation of the second back EMF of the system. Now, instead of an "equal retardation" force being produced in the back EMF region, a forward EMF is produced which adds to the rotor/flywheel energy, rather than subtracting from it. In short, it further accelerates the rotor/flywheel.

This results in a non-conservative magnetic field along the rotor's path. The line integral of the field around that path (i.e., the net work on the rotor/flywheel to increase its energy and angular momentum) is not zero but a significant amount. Hence, the creation of an asymmetrical back EMF impulse magnetic motor:
1) Takes its available excess energy from a known external source, the huge usually non-intercepted portion of the energy flow around the coil;
2) Further increases the source dipolarity by this back EMF energy; and
3) Produces available excess energy flow directly from the source dipole's increased broken symmetry in its fierce energy exchange with the local vacuum.

By operating as an open dissipative system, not in thermodynamic equilibrium with the active vacuum, the system can permissibly receive available energy from a known environmental source and then output this energy to a load. As an open dissipative system not in thermodynamic equilibrium, this new and unique monopole motor can tap in on back EMF to energise itself, loads and losses simultaneously, fully complying with known laws of physics and thermodynamics.

BRIEF DESCRIPTION OF THE DRAWINGS

Fig.1 is a perspective side view of a monopole back EMF motor with a single stator and a single rotor.

FIG. 1

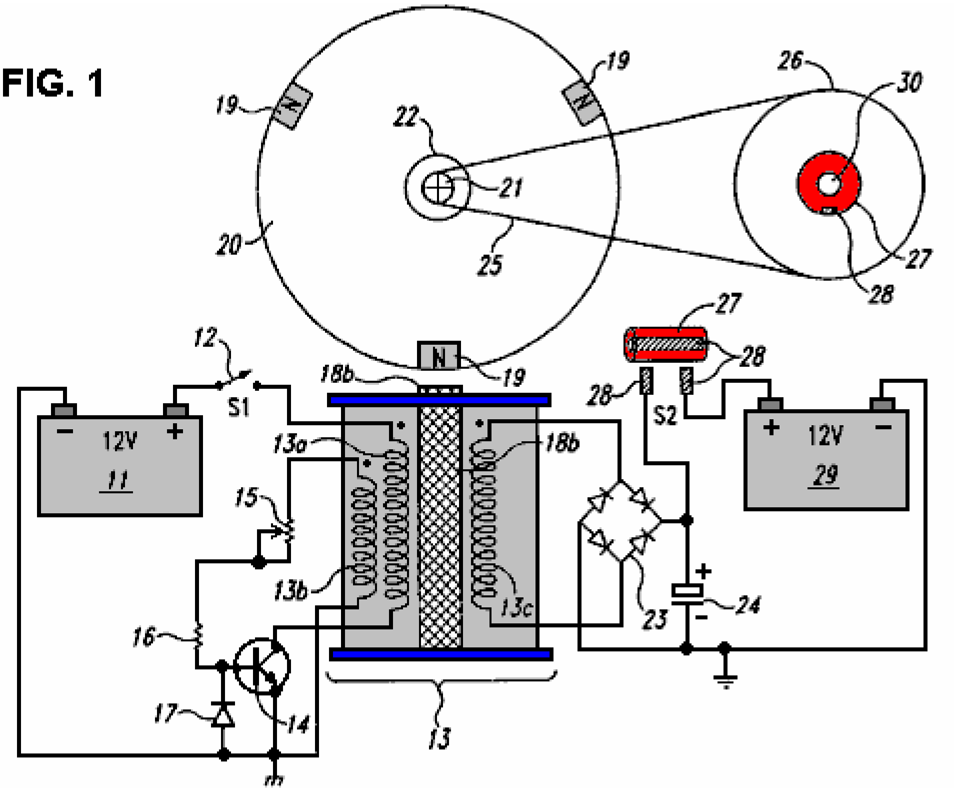

Fig.2 is a perspective top view of a monopole back EMF motor with a single stator and a single rotor.

FIG. 2

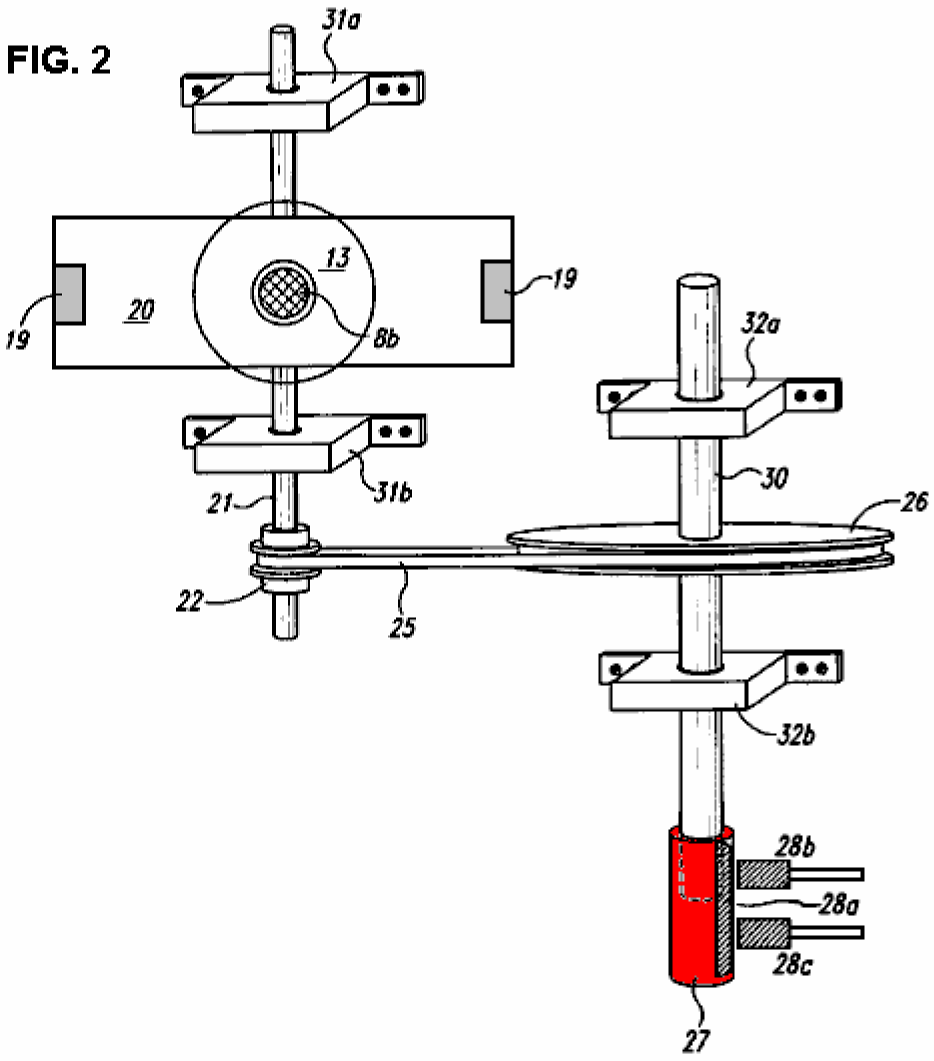

Fig.3 is a block diagram demonstrating the circuitry for a monopole back EMF motor.

FIG. 3

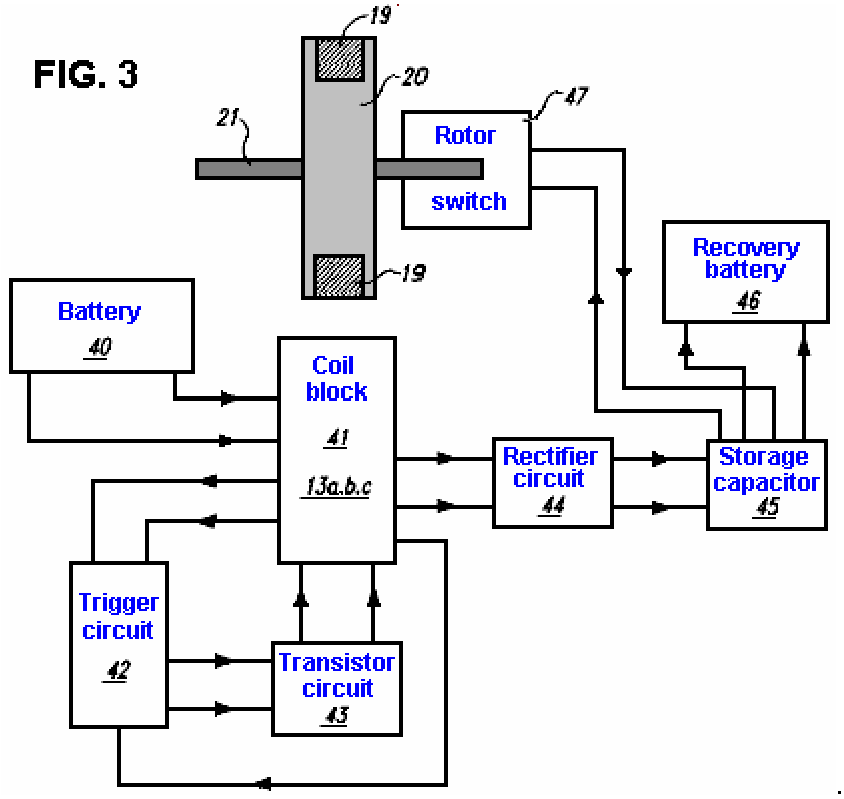

DETAILED DESCRIPTION OF THE INVENTION

An embodiment of the present invention is a device and method for a monopole back EMF electromagnetic motor. As described in the Summary of the Invention, this monopole motor conforms to all applicable electrodynamic laws of physics and is in harmony with the law of the conservation of energy, the laws of electromagnetism and other related natural laws of physics.

The monopole back EMF electromagnetic motor comprises a combination of elements and circuitry to capture available energy (back EMF) in a recovery element, such as a capacitor, from output coils. The available stored energy in the recovery element is used to charge a recovery battery.

As a starting point, an arbitrary method in describing this device will be employed, namely, the flow of electrical energy and mechanical forces will be tracked from the energy's inception at the primary battery to its final storage in the recovery battery.

FIG. 1

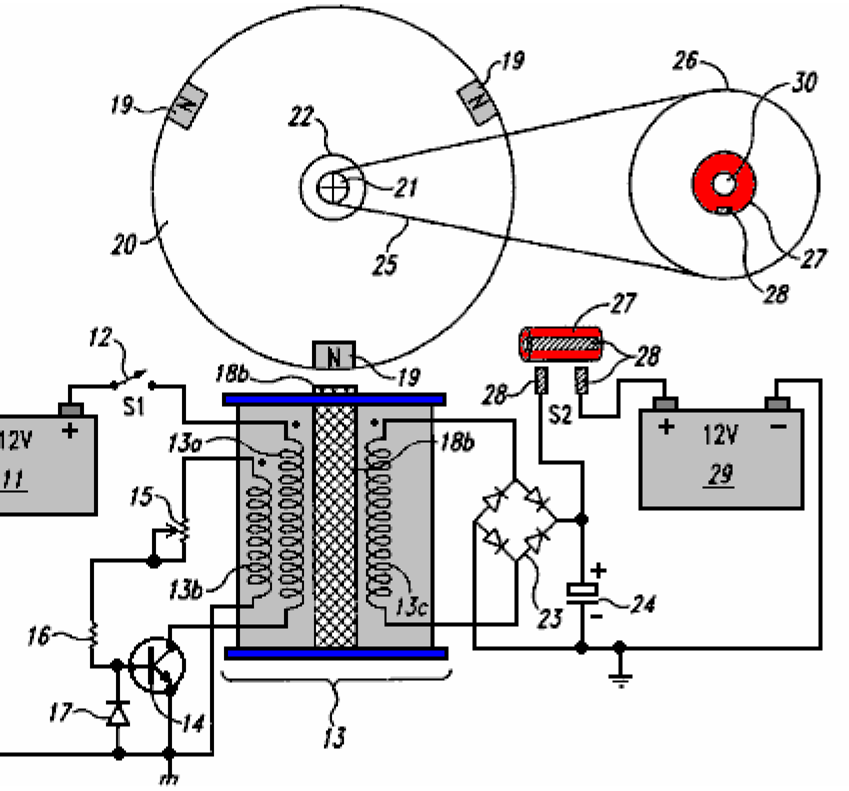

Fig.1 is a perspective side view of the monopole motor according to an embodiment of the invention. As shown in **Fig.1**, electrical energy from primary battery **11** periodically flows through power switch **12** and through power-coil wiring **13a**. In one embodiment, power switch **12** is merely an On-Off mechanical switch and is not electronic. However, the switch **12** may be a solid-state switching circuit, a magnetic Reed switch, a commutator, an optical switch, a Hall-effect switch, or any other conventional transistorised or mechanical switch. Coil **13** is comprised of three windings: power-coil winding **13a**, trigger-coil winding **13b**, and recovery-coil winding **13c**. However, the number of windings can be more or fewer than three, depending upon the size of the coil **13**, size of the motor and the amount of available energy to be captured, stored and used, as measured in watts. Electrical energy then periodically flows from power-coil winding **13a** and through transistor **14**.

Trigger energy also periodically flows through variable resistor **15** and resistor **16**. Clamping diode **17** clamps the reverse base-emitter voltage of transistor switch **14** at a safe reverse-bias level that does not damage the transistor. Energy flows to stator **18a** and pole piece **18b**, an extension of stator **18a**. Pole piece **18b** is electrically magnetised only when transistor switch **14** is on and maintains the same polarity as the rotor poles **19** - North pole in this instance - when electrically magnetised. The North rotor poles **19a**, **19b** and **19c**, which are attached to rotor **20**, come in momentary apposition with pole piece **18b** creating a momentary monopole interface. The poles **19a,b,c**, which are actually permanent magnets with their North poles facing outward from the rotor **20**, maintain the same polarity when in momentary alignment with pole piece **18b**.

Rotor **20** is attached to rotor shaft **21**, which has drive pulley **22**. Attached to rotor shaft **21** are rotor-shaft bearing blocks **31a** and **31b**, as seen in **Fig.2**. As rotor **20** begins to rotate, the poles **19a,b,c** respectively comes into alignment with magnetised pole piece **18b** in a momentary monopole interface with energy flowing through diode bridge rectifier **23** and capacitor **24**. The number of capacitors may be of a wide range, depending upon the amount of energy to be temporarily stored before being expelled or flash charged into recovery battery **29**. Timing belt **25** connects drive pulley **22** on timing shaft **21** to timing wheel **26**. Attached to timing wheel **26** is contact rotor **27**, a copper insulated switch that upon rotation, comes in contact with brushes on mechanical switch **28**. The means for counting the number of rotor revolutions may be a timing gear or a timing belt. Finally, the available energy derived from the back EMF that is stored in capacitor **24** is then discharged and stored in recovery battery **29**.

FIG. 2

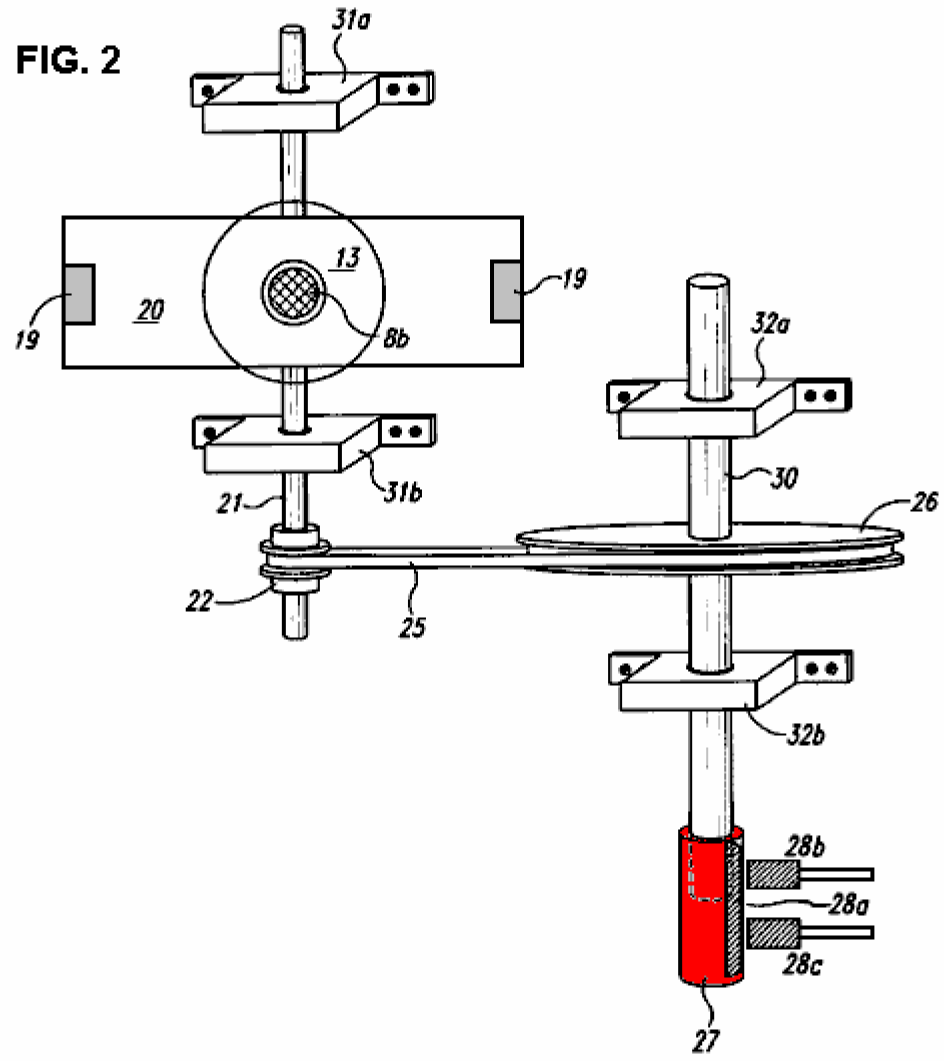

Fig.2 is a mechanical perspective top view of the monopole motor of the instant invention without electrical circuitry. Stator **18a** consists of coil **13**, which is comprised of three separate coil windings: power-coil winding **13a**, trigger-coil winding **13b** and recovery-coil winding **13c**. Pole piece **18b** is at the end of stator **18a**. As rotor **20**, (which is attached to rotor shaft **21**) rotates, each pole **19** respectively comes in a momentary monopole interface with pole piece **18b**. The polarity of pole piece **18b** is constant when electrically magnetised. Rotor shaft **21** has rotor shaft bearing blocks **31a,b** attached to it for stabilisation of rotor shaft **21**. Attached to rotor shaft **21** is drive pulley **22** with timing belt **25** engaged with it. Another means for timing may be a timing gear. Timing belt **25** engages with timing wheel **26** at its other end. Timing wheel **26** is attached to timing shaft **30**. Shaft **30** is stabilised with timing shaft bearing blocks **32a,b**. Attached to one end of timing shaft **30** is contact rotor **27** with brush **28a**, which, upon rotation of the timing shaft, comes into momentary contact with brushes **28b,c**.

Fig.3 is a block diagram detailing the circuitry of the monopole motor. Block **40** represents primary battery **11** with energy flowing to coil block **41**, which represents coil windings **13a,b,c**. From coil block **41** energy flows into three directions: to trigger-circuit block **42**, transistor-circuit block **43**, and rectifier-circuit block **44**. Energy flows from rectifier-block **44** to storage-capacitor block **45** with energy flowing from block **45** to both recovery-battery block **46** and rotor-switch block **47**.

Referring to **Fig.1**, the operation of the motor is described according to an embodiment of the invention. For purpose of explanation, assume that the rotor **20** is initially not moving, and one of the poles **19** is in the three o'clock position.

FIG. 1

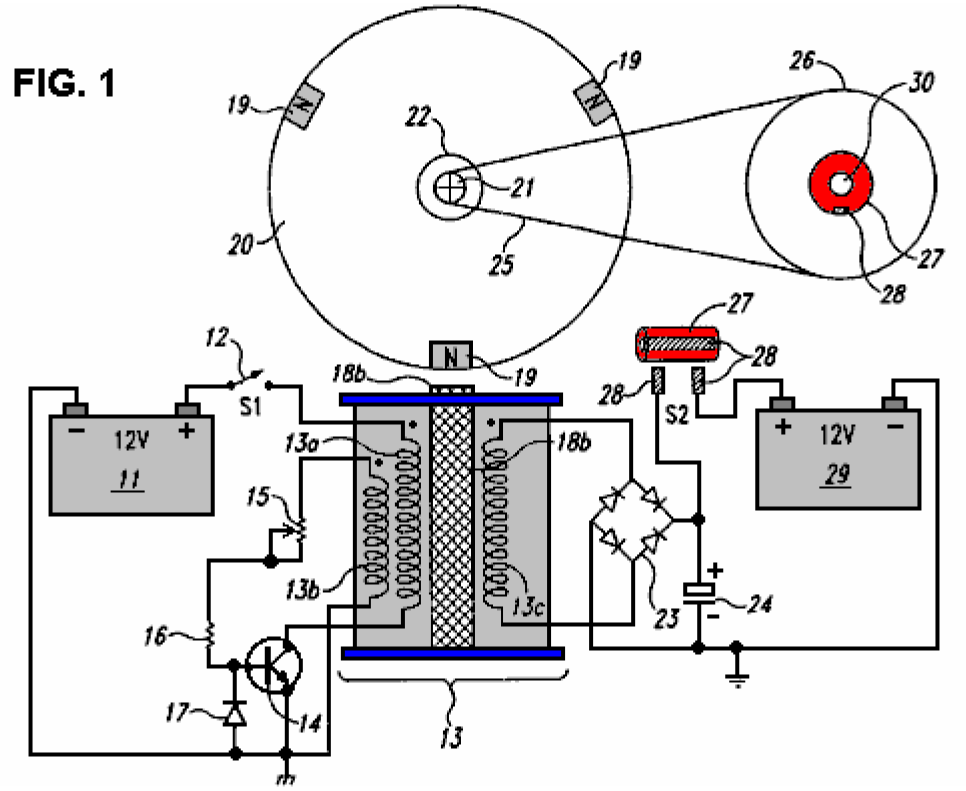

First, the switch **12** is closed. Because the transistor **14** is off, no current flows through the winding **13a**.

Next, the motor is started by rotating the rotor **20**, say, in a clockwise direction. The rotor may be rotated by hand, or by a conventional motor-starting device or circuit (not shown).

As the rotor **20** rotates, the pole **19** moves from the three o'clock position towards the pole piece **18b** and generates a magnetic flux in the windings **13a**,**13b** and**13c**. More specifically, the stator **18a** and the pole piece **18b** include a ferromagnetic material such as iron. Therefore, as the pole **19** moves nearer to the pole piece **18b**, it magnetises the pole piece **18b** to a polarity - South in this instance - that is opposite to the polarity of the pole **19** (which is North). This magnetisation of the pole piece **18b** generates a magnetic flux in the windings **13a-13c**. Furthermore, this magnetisation also causes a magnetic attraction between the pole **19** and the pole piece **18b**. This attraction pulls the pole **19** toward the pole piece **18b**, and thus reinforces the rotation of the rotor **20**.

The magnetic flux in the windings **13a-13c** generates voltages across their respective windings. More specifically, as the pole **19** rotates toward the pole piece **18b**, the magnetisation of the stator **18a** and the pole piece **18b**, and thus the magnetic flux in the windings **13a-13c**, increases. This increasing flux generates voltages across the windings **13a-13c** such that the dotted (top) end of each winding is more positive than the opposite end. These voltages are proportional to the rate at which the magnetic flux is increasing, and so, they are proportional to the velocity of the pole **19**.

At some point, the voltage across the winding **13b** becomes high enough to turn the transistor **14c** on. This turn-on, i.e., trigger, voltage depends on the combined serial resistance of the potentiometer **15** and the resistor **16**. The higher this combined resistance, the higher the trigger voltage, and vice-versa. Therefore, one can set the level of the trigger voltage by adjusting the potentiometer **15**.

In addition, depending on the level of voltage across the capacitor **24**, the voltage across the winding **13c** may be high enough to cause an energy recovery current to flow through the winding **13c**, the rectifier **23**, and the capacitor **24**. Thus, when the recovery current flows, the winding **13c** is converting magnetic energy from the rotating pole **19** into electrical energy, which is stored in the capacitor **24**.

Once turned on, the transistor **14** generates an opposing magnetic flux in the windings **13a-13c**. More specifically, the transistor **14** draws a current from the battery **11**, through the switch **12** and the winding **13b**. This current increases and generates an increasing magnetic flux that opposes the flux generated by the rotating pole **19**.

When the opposing magnetic flux exceeds the flux generated by the rotating pole **19**, the opposing flux reinforces the rotation of the rotor **20**. Specifically, when the opposing flux (which is generated by the increasing current through winding **13a**) exceeds the flux generated by the pole **19**, the magnetisation of the pole piece **18** inverts to North pole. Therefore, the reverse-magnetic pole piece **18** repels the pole **19**, and thus imparts a rotating force to the rotor **20**. The pole piece **18** rotates the rotor **20** with maximum efficiency if the pole-piece magnetisation inverts to North when the centre of the pole **19** is aligned with the centre of the pole piece. Typically, the potentiometer **15** is adjusted to set the trigger voltage of the transistor **14** at a level which attains or approximates to this maximum efficiency.

The transistor **14** then turns off before the opposing flux can work against the rotation of the rotor **20**. Specifically, if the pole piece **18** remains magnetised to North pole, it will repel the next pole **19** in a direction (counterclockwise in this example) opposite to the rotational direction of the rotor **20**. Therefore, the motor turns transistor **14** off, and thus demagnetises the pole piece **18**, before this undesirable repulsion occurs. More specifically, when the opposing flux exceeds the flux generated by the pole **19**, the voltage across the winding **13b** reverses polarity such that the dotted end is less positive than the opposite end. The voltage across the winding **13b** decreases as the opposing flux increases. At some point, the voltage at the base of the transistor decreases to a level that turns transistor **14** off. This turn-off point depends on the combined resistance of potentiometer **15** and resistor **16** and the capacitance (not shown) at the transistor base. Therefore, potentiometer **15** can be adjusted, or other conventional techniques can be used to adjust the timing of this turn-off point.

The rectifier **23** and capacitor **24** recapture the energy that is released by the magnetic field (which energy would otherwise be lost) when the transistor **14** turns off. Specifically, turning transistor **14** off abruptly, cuts off the current flowing through winding **13a**. This generates voltage spikes across the windings **13a-13c** where the dotted ends are less positive than their respective opposite ends. These voltage spikes represent the energy released as the current-induced magnetisation of stator **18**a and pole piece **18b** collapses, and may have a magnitude of several hundred volts. But, as the voltage spike across the winding **13c** increases above the sum of the two diode drops of the rectifier **23**, it causes an energy-recovery current to flow through the rectifier **23** and the voltage across the capacitor **24** charge the capacitor **24**. Thus, a significant portion of the energy released upon collapse of the current-induced magnetic field is recaptured and stored as a voltage in the capacitor **24**. In addition, the diode **17** prevents damage to the transistor **14** by clamping the reverse base-emitter voltage caused by the voltage spike across the winding **13b**.

The recaptured energy can be used in a number of ways. For example, the energy can be used to charge a battery **29**. In one embodiment, the timing wheel **26** makes two revolutions for each revolution of the rotor **20**. The contact rotor **27** closes a switch **28**, and thus dumps the charge on the capacitor **24** into the battery **29**, once each revolution of the wheel **26**. Other energy-recapture devices and techniques may also be used. Rotor **20** may be stopped, either by applying a brake to it or by opening the switch **12**.

Other embodiments of the monopole motor are contemplated. For example, instead of remaining closed for the entire operation of the motor, the switch **12** may be a conventional optical switch or a Hall-effect switch that opens and closes automatically at the appropriate times. To increase the power of the motor, the number of stators **18a** and pole pieces **18b**, may be increased and/or the number of poles **19**. Furthermore, one can magnetise the stator **18a** and pole piece **18b** during the attraction of the pole **19** instead of or in addition to magnetising the stator and pole piece during the repulsion of the pole **19**.

Moreover, the stator **18a** may be omitted so that coil **13** becomes an air coil, or the stator **18a** and the pole piece **18b** may compose a permanent magnet. In addition, although the transistor **14** is described as being a bipolar transistor, a MOSFET transistor may also be used. Furthermore, the recaptured energy may be used to recharge the battery **11**. In addition, although described as rotating in a clockwise direction, the rotor **20** can rotate in a counterclockwise direction. Moreover, although described as attracting a rotor pole **19** when no current flows through winding **13a** and repelling the pole **19** when a current flows through winding **13a**, the pole piece **18b** may be constructed so that it attracts the pole **19** when a current flows through winding **13a** and repels the pole **19** when no current flows through winding **13a**.

In multiple stator/rotor systems, each individual stator may be energised one at a time or all of the stators may be energised simultaneously. Any number of stators and rotors may be incorporated into the design of such multiple stator/rotor monopole motor combinations. However, while there may be several stators per rotor, there can only be one rotor for a single stator. The number of stators and rotors that would comprise a particular motor is dependent upon the amount of power required in the form of watts. Any number of magnets, used in a monopole fashion, may comprise a single rotor. The number of magnets incorporated into a particular rotor is dependent upon the size of the rotor and power required of the motor. The desired size and horse power of the motor determines whether the stators will be in parallel or fired sequentially. Energy is made accessible through the capturing of available energy from the back EMF as a result of the unique circuitry and timing of the monopole motor. Individual motors may be connected in sequence with each motor having various combinations of stators and rotors or they may be connected in parallel. Each rotor may have any number of rotor magnets, all arranged without change of polarity. The number of stators for an individual motor may also be of a wide range.

One feature that distinguishes this motor from all others, is the use of monopole magnets in momentary apposition with the pole piece of the stator maintaining the same polarity when magnetised. In this particular embodiment, there are three magnets and one pole piece, the pole piece being an extension of a permanent-magnet stator. Finally, although the invention has been described with reference of particular means, materials and embodiments, it is to be understood that the invention is not limited to the particulars disclosed and extends to all equivalents within the scope of the claims.

CLAIMS

1. A back EMF monopole motor utilising a rotor wherein the magnets maintain a polarity when in apposition with a stator pole piece having the polarity, said motor to capture available back EMF energy for charging and storage in a recovery device, the motor comprising:
  a. A means for producing initial energy;
  b. A means for capturing energy in the form of back EMF, caused by a collapsing field in a coil comprised of multiple windings with a pole piece at one end of the stator of the coil, the pole piece having the correct polarity when magnetised and in aligned with the magnets of the rotor;
  c. A means for rectifying the back EMF energy, comprising of a voltage bridge for transferring the back EMF energy to a capacitor for storage;
  d. A means for discharging the stored voltage across a recovery battery; and
  e. A means for counting the revolutions of the rotor.

2. The back EMF monopole motor of Claim 1, where a battery is used to provide the initial energy.

3. The back EMF monopole motor of claim 1, where the rotor revolutions are counted by a timing gear.

4. The back EMF monopole motor of claim 1, where the rotor revolutions are counted by a timing belt.

5. The back EMF monopole motor of claim 1, where the means for discharging collected energy comprises a rotating switching commutator which discharges the collected energy into a recovery battery, the commutator switch having the same polarity as the recovery battery.

6. A back EMF monopole motor utilising a rotor in which the rotor magnets maintain a polarity when aligned with a magnetised stator pole piece, suited to capturing available back EMF energy for charging and storage in a recovery device, the motor comprising:
  a. A primary input battery and a means for switching the battery, namely, either a solid-state switching circuitry, a magnetic Reed switch, a commutator, an optical switch, or a Hall-effect switch;
  b. A means for capturing energy in the form of back EMF, created by a collapsing field in a coil comprised of multiple windings and a pole piece at one end of the stator coil;
  c. A means for rectifying the back EMF energy comprising a voltage bridge for transferring the energy to a capacitor for storage;
  d. A means for discharging the stored voltage across a recovery battery, the means being a rotating contact rotor switch;
  e. A means for counting the revolutions of the rotor via a timing gear or timing belt;
f. A rotating switching commutator for switching the rotating contact rotor switch.

US Patent 6,392,370 21st May 2002 Inventor: John C. Bedini

DEVICE AND METHOD OF A BACK EMF PERMANENT ELECTROMAGNETIC MOTOR GENERATOR

ABSTRACT

This invention is a back EMF permanent electromagnetic motor generator and method using a regauging process for capturing available electromagnetic energy in the system. The device comprises a rotor with magnets of the same polarity; a timing wheel in apposition to a magnetic Hall-effect pickup switch semiconductor; and a stator comprised of two bars connected by a permanent magnet with magnetised pole pieces at one end of each bar. There are input and output coils created by wrapping each bar with a conducting material such as copper wire. Energy from the output coils is transferred to a recovery rectifier or diode. The magnets of the rotor, which is located on a shaft along with the timing wheel, are in apposition to the magnetised pole pieces of the two bars. The invention works through a process of regauging, that is, the flux fields created by the coils is collapsed because of a reversal of the magnetic field in the magnetised pole pieces thus allowing the capture of available back EMF energy. Additional available energy may be captured and used to re-energise the battery, and/or sent in another direction to be used for work. As an alternative, the available back EMF energy may be dissipated into the system.

BACKGROUND OF THE INVENTION

1. Field of the Invention

The invention relates generally to the capturing of electromagnetic energy using a method and device to create back EMF (electromagnetic force) and re-phasing of the back EMF to recycle and capture the available back EMF energy. Back EMF is also referred to as regauging and may be defined as energy created by the magnetic field from coils, and only from coils, and not from magnets.

2. Background Information and Related Art

Operation of a normal magnetic motor has the rotor pole attracting the stator pole, resulting in the generation of power from the magnets to the rotor and flywheel. During this phase, energy flows from the magnetics to the rotor/flywheel and is stored in the increased rotation. A rotor pole leaving a stator pole and creating a condition of drag-back results in power having to be put back into the magnetic section by the rotor and flywheel to forcibly overcome the drag-back. In a perfect, friction-free motor, the nett force field is therefore referred to as most conservative. In other words, a most conservative EMF motor has maximum efficiency. Without extra energy continually fed to the motor, no nett work can be done by the magnetic field, since half the time the magnetic field adds energy to the load (the rotor and flywheel) and the other half of the time it subtracts energy from the load (the rotor and flywheel). Therefore the total nett energy output is zero in any such rotary process without additional energy input. To use a present day magnetic motor, continuous energy must be fed to the motor to overcome drag-back and to power the motor and its load.

Present EMF motors and generators all use such conservative fields and therefore, have internal losses. Hence, it is necessary to continually input all of the energy that the motor outputs to the load, plus more energy to cover losses inside the motor itself. EMF motors are rated for efficiency and performance by how much energy input into the motor actually results in output energy to the load. Normally, the Coefficient of Performance (COP) rating is used as a measure of efficiency. The COP is the actual output energy going into the load and powering it, divided by the energy that must be input into the device with its load. COP is the power out into the load, divided by the power input into the motor/load combination. If there were zero internal losses in a motor, that "perfect" motor would have a coefficient of performance (COP) equal to 1.0. That is, all energy fed into the motor would be output by the motor directly into the load, and none of the input energy would be lost or dissipated in the motor itself.

In magnetic motor generators presently in use, however, due to friction and design flaws, there are always internal losses and inefficiencies. Some of the energy input into the motor is dissipated in these internal losses. As a consequence, the energy that gets to the load is always less than the input energy. So a standard motor operates with a COP of less than 1.0 which is expressed as COP<1.0. An inefficient motor may have a COP of 0.4 or 0.45, while a specially designed, highly efficient motor may have a COP of 0.85.

The conservative field inside a motor itself can be divided into two phases. Producing a conservative field involves nett symmetry between the "power out" phase from the magnetics to the rotor/flywheel and the "power back in" phase from the rotor/flywheel back to the magnetics. That is, the two flows of energy (one from the

magnetics into the rotor and flywheel, and one from the rotor and flywheel back to the magnetics) are identical in magnitude but opposite in direction. Each phase alone is said to be "asymmetrical"; that is, it either has:
1) a nett energy flow out to the rotor/flywheel; or
2) a nett energy flow back into the magnetics from the rotor/flywheel.
In simplified terms, it is referred to as "power out" and "power back in" phases with respect to the motor magnetics. Hence, the two asymmetrical phases are:
1) the power-out phase; and
2) the "power back in" phase, with reference to the magnetics.

For the power-out phase, energy is derived from the EMF existing between the stator pole and incoming rotor pole in an attraction mode. In this phase, the rotary motion (angular momentum and kinetic energy) of the rotor and flywheel is increased. In short, power is added to the rotor/flywheel (and thus to the load) from the fields between stator pole and rotor pole (the electromagnetic aspects of the system).

For the "power back in" phase, energy must be fed back into the magnetics from the rotor and flywheel (and the load) to overcome the drag-back forces existing between stator pole and outgoing rotor pole. In this phase, energy is returned to the internal magnetic system from the rotary motion of the rotor and flywheel (the angular momentum, which is the rotational energy multiplied by time). As is well known in physics, a rotor/flywheel's angular momentum provides a convenient way to store energy with the spinning rotor/flywheel mass acting as an energy reservoir.

All present day conventional magnetic motors use various methods for overcoming, and partially reversing, back EMF. Back EMF is the out of phase return pulse from the coil and is also referred to as regauging. The back EMF is shorted out and the rotor is attracted back in, therefore eliminating back drag. This can be accomplished by pouring more energy in to overpower the back EMF, thereby producing a forward EMF in that region. The energy required for this method must be furnished by the operator.

The motor of the present invention uses only a small amount of energy to "trigger" a much larger input of available energy by supplying back EMF, thus increasing the potential energy of the system. It then utilises this excess potential energy to reduce or reverse back EMF, thereby increasing the efficiency of the motor and, therefore, the COP.

If the energy in phase 1 (the power-out phase) is increased by additional available energy in the electromagnetics themselves, then the energy in phase 1 can be made greater than the energy in phase 2 (the power-back-in phase) without the operator furnishing the energy utilised. This produces a non-conservative nett field. Nett power can then be taken from the rotating stator and flywheel, because the available energy transferred into the stator and flywheel by the additional effects, is transformed by the rotor/flywheel into additional angular momentum and stored as such. Angular momentum is conserved at all times; but now some of the angular momentum added to the flywheel is generated by additional effects in the electromagnetics rather than being provided by the operator.

Electrodynamicists assume that the potential available energy of any system can be changed at will and without cost. This is back EMF and is well-known in physics. It is also routinely employed by electrodynamicists in the theoretical aspects. However, to simplify the mathematics, electrodynamicists will create a back EMF twice simultaneously, each back EMF being carefully selected so that the two available forces which are produced, are equal and opposite and cancel each other "symmetrically". This is referred to as "symmetrical back EMF". A symmetrical back EMF system cannot produce a COP>1.0.
On the other hand, the motor of the present invention deliberately creates a back EMF itself and its potential energy only once at a time, thereby retaining each extra force for a period of time and applying it to increase the angular momentum and kinetic energy of the rotor and flywheel. Specifically, this back EMF energy with its nett force is deliberately applied in the motor of the present invention to overcome and even reverse the conventional drag-back (the back EMF). Hence less energy need be taken from the rotor and flywheel to overcome the reduced back EMF, and in the ideal case none is required since the back EMF has been overpowered and converted to forward EMF by the back EMF energy and force. In the motor of the present invention, the conventional back-drag section of the magnetics becomes a forward-EMF section and now adds energy to the rotor/flywheel instead of subtracting it. The important feature is that the operator only has to provide the small amount of energy necessary to trigger the back EMF, and does not have to furnish the much larger back EMF energy itself.

When the desired energy in phase 1 (the power out phase) is thus made greater than the undesired "drag-back" energy in phase 2, then part of the output power normally dragged back from the rotor and flywheel by the fields in phase 2 is not required. Hence, compared to a system without the special back EMF mechanisms, additional power is available from the rotor/flywheel. The rotor maintains additional angular momentum and kinetic energy, compared to a system which does not produce back EMF itself. Consequently, the excess angular momentum retained by the rotor and flywheel can be utilised as additional shaft power to power an external load connected to the shaft.

A standard magnetic motor operates as the result of the motor being furnished with external energy input into the system by the operator to reduce phase 2 (power back into the magnetics from the rotor/flywheel) by any of several methods and mechanisms. The primary purpose of this external energy input into the system is to overcome the back EMF and also provide for the inevitable energy losses in the system. There is no input of energy separate from the operator input. Therefore, the COP of any standard magnetic motor is COP less than 1.0. The efficiency of a standard magnetic motor varies from less than 50% to a maximum of about 85%, and so has a COP<1.0. When nothing is done in the motor that will produce a reduction of the back EMF without the operator inputting all the energy for it, then for even a frictionless, ideal permanent magnet motor, the COP can never exceed 1.0.

Until the introduction of the motor of the present invention, it has been standard universal practice that the operator must furnish all energy used to reduce the back EMF, provide for the internal losses, and power the load. It is therefore a common belief by the scientific community that an ideal (loss-less) permanent magnet motor cannot exceed a COP of 1.0. That is true, so long as the operator himself must furnish all the energy. Furthermore, since real permanent magnetic motors have real internal losses, some of the input energy is always lost in the motor itself, and that lost energy is not available for powering the rotor/flywheel and load. Hence a real permanent magnetic motor of the conventional kind will always have a COP<1.0.

The common assumption that the COP of a motor is limited to less than 1.0 is not necessarily true, and that COP>1.0 is permitted without violating the laws of nature, physics, or thermodynamics. However, it can immediately be seen that any permanent magnet motor exhibiting a COP>1.0 must have some available energy input returning in the form of back EMF.

A problem relates to how back EMF energy can be obtained from a circuit's external environment for the specific task of reducing the back-drag EMF without the operator having to supply any input of that excess energy. In short, the ultimate challenge is to find a way to cause the system to:
1) become an open dissipative system, that is, a system receiving available excess energy from its environment, in other words, from an external source; and
2) use that available excess energy to reduce the drag-back EMF between stator and rotor poles as the rotor pole is leaving the stator pole.
If this objective can be accomplished, the system will be removed from thermodynamic equilibrium. Instead, it will be converted to a system out-of-thermodynamic equilibrium. Such a system is not obliged to obey classical equilibrium thermodynamics.

Instead, an out-of-equilibrium thermodynamic system must obey the thermodynamics of open systems far from the established and well-known parameters of thermodynamic equilibrium. As is well known in the physics of thermodynamics, such open systems can permissibly:
1) self-order;
2) self-oscillate;
3) output more back EMF energy than energy input by the operator (the available excess back EMF energy is received from an external source and some energy is input by the operator as well);
4) power itself as well as its loads and losses simultaneously (in that case, all the energy is received from the available external source and there is no input energy from the operator); and
5) exhibit negative entropy, that is, produce an increase of energy that is available in the system, and that is independent of the energy put into the system by the operator.

As a definition, entropy roughly corresponds to the energy of a system that has become unavailable for use. Negative entropy corresponds to additional energy of a system that has become available for use.

In the back EMF permanent magnet electromagnetic motor generator of the present invention, several known processes and methods are utilised which allow the invention to operate periodically as an open dissipative system (receiving available excess energy from back EMF) far from thermodynamic equilibrium, whereby it produces and receives its excess energy from a known external source.

A method is utilised to temporarily produce a much larger source of available external energy around an energised coil. Then the unique design features of this new motor provides a method and mechanism that can immediately produce a second increase in that energy, concurrently as the energy flow is reversed. Therefore, the motor is capable of producing two asymmetrical back EMFs, one after the other, of the energy within a single coil, which dramatically increases the energy available and causes that available excess energy to then enter the circuit as an impulse, being collected and utilised.

The present motor utilises this available excess back EMF energy to overcome and even reverse the back-drag EMF between stator pole and rotor pole, while furnishing only a small trigger pulse of energy necessary to control and activate the direction of the back EMF energy flow.

By using a number of such dual asymmetrical self back EMFs for every revolution of the rotor, the rotor and flywheel collectively focus all the excess impulsive inputs into increased angular momentum (expressed as energy multiplied by time), shaft torque, and shaft power.

Further, some of the excess energy deliberately generated in the coil by the utilisation of the dual process manifests itself in the form of excess electrical energy in the circuit and is utilised to power electrical loads, e.g., a lamp, fan, motor, or other electrical devices. The remainder of the excess energy generated in the coil can be used to power the rotor and flywheel, with the rotor/flywheel also furnishing shaft horsepower for powering mechanical loads.

This new and unique motor utilises a means to furnish the relatively small amount of energy to initiate the impulsive asymmetrical self back EMF actions. Then part of the available excess electrical power drawn off from the back EMFs is utilised to recharge the battery with dramatically increased over voltage pulses.

The unique design features of this motor utilise both north and south magnetic poles of each rotor and stator magnet. Therefore, the number of impulsive self back EMFs in a single rotation of the rotor is doubled. Advanced designs increase the number of self back EMFs in a single rotor rotation with the result that there is an increase in the number of impulses per rotation which increase the power output of this new motor.

The sharp voltage pulse produced in the coil of this new motor by the rapidly collapsing field in the back EMF coil is connected to a battery in charge mode and to an external electrical load. The nett result is that the coil asymmetrically creates back EMF itself in a manner adding available energy and impulse to the circuit. The excess available energy collected in the coil is used to reverse the back-EMF phase of the stator-rotor fields to a forward EMF condition, and through an impulse, adding acceleration and angular momentum to the rotor and flywheel. At the same time, a part of the excess energy collected in the coil is used to power electrical loads such as charging a battery and operating a lamp or such other device.

It is well known that changing the voltage alone, creates a back EMF and requires no work. This is because to change the potential energy does not require changing the form of that potential energy, but only its magnitude. Strictly speaking, work is the changing of the form of energy. Therefore, as long as the form of the potential energy is not changed, the magnitude can be changed without having to perform work in the process. The motor of the present invention takes advantage of this permissible operation to create back EMF asymmetrically, and thereby change its own usable available potential energy.

In an electric power system, the potential (voltage) is changed by inputting energy to do work on the internal charges of the generator or battery. This potential energy is expended within the generator (or battery) to force the internal charges apart, forming a source dipole. Then the external closed circuit system connected to that source dipole ineptly pumps the spent electrons in the ground line back through the back EMF of the source dipole, thereby scattering the charges and killing the dipole. This shuts off the energy flow from the source dipole to the external circuit. As a consequence of that conventional method, it is a requirement to input and replace additional energy to again restore the dipole. The circuits currently utilised in most electrical generators have been designed to keep on destroying the energy flow by continually scattering all of the dipole charges and terminating the dipole. Therefore, it is necessary to keep on inputting energy to the generator to keep restoring its source dipole.

An investigation of particle physics is required to see what furnishes the energy to the external circuit. Since neither a battery nor a generator furnishes energy to the external circuit, but only furnishes energy to form the source dipole, a better understanding of the electric power principle is required to fully understand how this new motor functions. A typical battery uses its stored chemical energy to form the source dipole. A generator utilises its input shaft energy of rotation to generate an internal magnetic field in which the positive charges are forced to move in one direction and the negative charges in the reverse direction, thereby forming the source dipole. In other words, the energy input into the generator does nothing except form the source dipole. None of the input energy goes to the external circuit. If increased current is drawn into the external load, there also is increased spent electron flow being rammed back through the source dipole, destroying it faster. Therefore, dipole-restoring-energy has to be inputted faster. The chemical energy of the battery also is expended only to separate its internal charges and form its source dipole. Again, if increased current and power is drawn into the external load, there is increased spent electron flow being rammed back through the source dipole, destroying it faster. This results in a depletion of the battery's stored energy faster, by forcing it to have to keep restoring the dipole faster.

Once the generator or battery source dipole is formed (the dipole is attached also to the external circuit), it is well known in particle physics that the dipole (same as any charge) is a broken symmetry in the vacuum energy flux.

By definition, this means that the source dipole extracts and orders part of that energy received from its vacuum interaction, and pours that energy out as the energy flowing through all space surrounding the external conductors in the attached circuit. Most of this enormous energy flow surging through space surrounding the external circuit does not strike the circuit at all, and does not get intercepted or utilised. Neither is it diverted into the circuit to power the electrons, but passes on out into space and is just "wasted". Only a small "sheath" of the energy flow along the surface of the conductors strikes the surface charges in those conductors and is thereby diverted into the circuit to power the electrons. Standard texts show the huge available but wasted energy flow component, but only calculate the small portion of the energy flow that strikes the circuit, is caught by it, and is utilised to power it.

In a typical circuit, the huge available but "wasted" component of the energy flow is about 10 to the power 13 times as large as the small component intercepted by the surface charges and diverted into the circuit to power it. Hence, around every circuit and circuit element such as a coil, there exists a huge non-intercepted, non-diverged energy flow that is far greater than the small energy flow being diverted and used by the circuit or element.

Thus there exists an enormous untapped energy flow immediately surrounding every EMF power circuit, from which available excess energy can be intercepted and collected by the circuit, if respective non-linear actions are initiated that sharply affect and increase the reaction cross section of the circuit (i.e., its ability to intercept this available but usually wasted energy flow).

The method in which the motor of the present invention alters the reaction cross section of the coils in the circuit, is by a novel use, which momentarily changes the reaction cross section of the coil in which it is invoked. Thus, by this new motor using only a small amount of current in the form of a triggering pulse, it is able to evoke and control the immediate change of the coil's reaction cross section to this normally wasted energy flow component. As a result, the motor captures and directs some of this usually wasted environmental energy, collecting the available excess energy in the coil and then releasing it for use in the motor. By timing and switching, the innovative gate design in this new motor directs the available excess energy so that it overcomes and reverses the return EMF of the rotor-stator pole combination during what would normally be the back EMF and demonstrates the creation of the second back EMF of the system. Now instead of an "equal retardation" force being produced in the back EMF region, a forward EMF is produced that is additive to the rotor/flywheel energy and not subtractive. In short, it further accelerates the rotor/flywheel.

This results in a non-conservative magnetic field along the rotor's path. The line integral of the field around that path (i.e., the nett work on the rotor/flywheel to increase its energy and angular momentum) is not zero but a significant amount. Hence, the creation of an asymmetrical back EMF impulse magnetic motor:
1) takes its available excess energy from a known external source, the huge usually non-intercepted portion of the energy flow around the coil;
2) further increases the source dipolarity by this back EMF energy; and
3) produces available excess energy flow directly from the source dipole's increased broken symmetry in its fierce energy exchange with the local vacuum.

No laws of physics or thermodynamics are violated in the method and device of the present invention, and conservation of energy rigorously applies at all times. Nonetheless, by operating as an open dissipative system not in thermodynamic equilibrium with the active vacuum, the system can permissibly receive available excess energy from a known environmental source and output more energy to a load than must be input by the operator alone. As an open system not in thermodynamic equilibrium, this new and unique motor can tap in to back EMF to energise itself, loads and losses simultaneously, fully complying with known laws of physics and thermodynamics.

A search of prior art failed to reveal any devices that recycle available energy from back EMF of a permanent electromagnetic motor generator as described in the present invention. However, the following prior art US patents were reviewed:

1. No. 5,532,532 to DeVault, et al., Hermetically Sealed Super-conducting Magnet Motor.
2. No. 5,508,575 to Elrod, Jr., Direct Drive Servovalve Having Magnetically Loaded Bearing.
3. No. 5,451,825 to Strohm, Voltage Homopolar Machine.
4. No. 5,371,426 to Nagate et al., Rotor For Brushless Motor.
5. No. 5,369,325 to Nagate et al., Rotor For Brushless Electromotor And Method For Making Same.
6. No. 5,356,534 to Zimmermann, deceased et al., Magnetic-Field Amplifier.
7. No. 5,350,958 to Ohnishi, Super-conducting Rotating Machine, A Super-conducting Coil, And A Super-conducting Generator For Use In A Lighting Equipment Using Solar Energy.
8. No. 5,334,894 to Nakagawa, Rotary Pulse Motor.
9. No. 5,177,054 to Lloyd, et al., Flux Trapped Superconductor Motor and Method.
10. No. 5,130,595 to Arora, Multiple Magnetic Paths Pulse Machine.
11. No. 4,980,595 to Arora, Multiple Magnetics Paths Machine.
12. No. 4,972,112 to Kim, Brushless D.C. Motor.

13. No. 4,916,346 to Kliman, Composite Rotor Lamination For Use In Reluctance Homopolar, And Permanent Magnet Machines.
14. No. 4,761,590 to Kaszman, Electric Motor.
15. No. 4,536,230 to Landa, et al., Anisotropic Permanent Magnets.
16. No. Re. 31,950 to Binns, Alternating Current Generators And Motors.
17. No. 4,488,075 to DeCesare, Alternator With Rotor Axial Flux Excitation.
18. No. 4,433,260 to Weisbord et al., Hysteresis Synchronous Motor Utilizing Polarized Rotor.
19. No. 4,429,263 to Muller, Low Magnetic Leakage Flux Brushless Pulse Controlled D-C Motor.
20. No. 4,423,343 to Field, II, Synchronous Motor System.
21. No. 4,417,167 to Ishii et al., DC Brushless Motor.
22. No. 4,265,754 to Menold, Water Treating Apparatus and Methods.
23. No. 4,265,746 to Zimmermann, Sr. et al. Water Treating Apparatus and Methods.
24. No. 4,222,021 to Bunker, Jr., Magnetic Apparatus Appearing To Possess a Single Pole.
25. No. 2,974,981 to Vervest et al., Arrester For Iron Particles.
26. No. 2,613,246 to Spodig, Magnetic System.
27. No. 2,560,260 to Sturtevant et al., Temperature Compensated Magnetic Suspension.

SUMMARY OF THE INVENTION

The device and method of the present invention is a new permanent electromagnetic motor generator that recycles back EMF energy (regauging) thus allowing the motor to produce an energy level of COP = 0.98, more or less, depending upon configuration, circuitry, switching elements and the number and size of stators, rotors and coils that comprise the motor. The rotor is fixed between two pole pieces of the stator. The motor generator is initially energised from a small starter battery means, analogous to a spark plug, that sends a small amount of energy to the motor, thus stimulating a rotating motion from the rotor. As the rotor rotates, energy is captured from the surrounding electromagnetic field containing an asymmetrical pulse wave of back EMF. The energy produced and captured can be directed in one of several directions, including returning energy to the initial starter battery, rotating a shaft for work and/or sending a current to energise a fan, light bulb or other such device.

BRIEF DESCRIPTION OF THE DRAWINGS

FIG.1 is the top view of a back EMF permanent electromagnetic motor generator with a single stator and a single rotor.

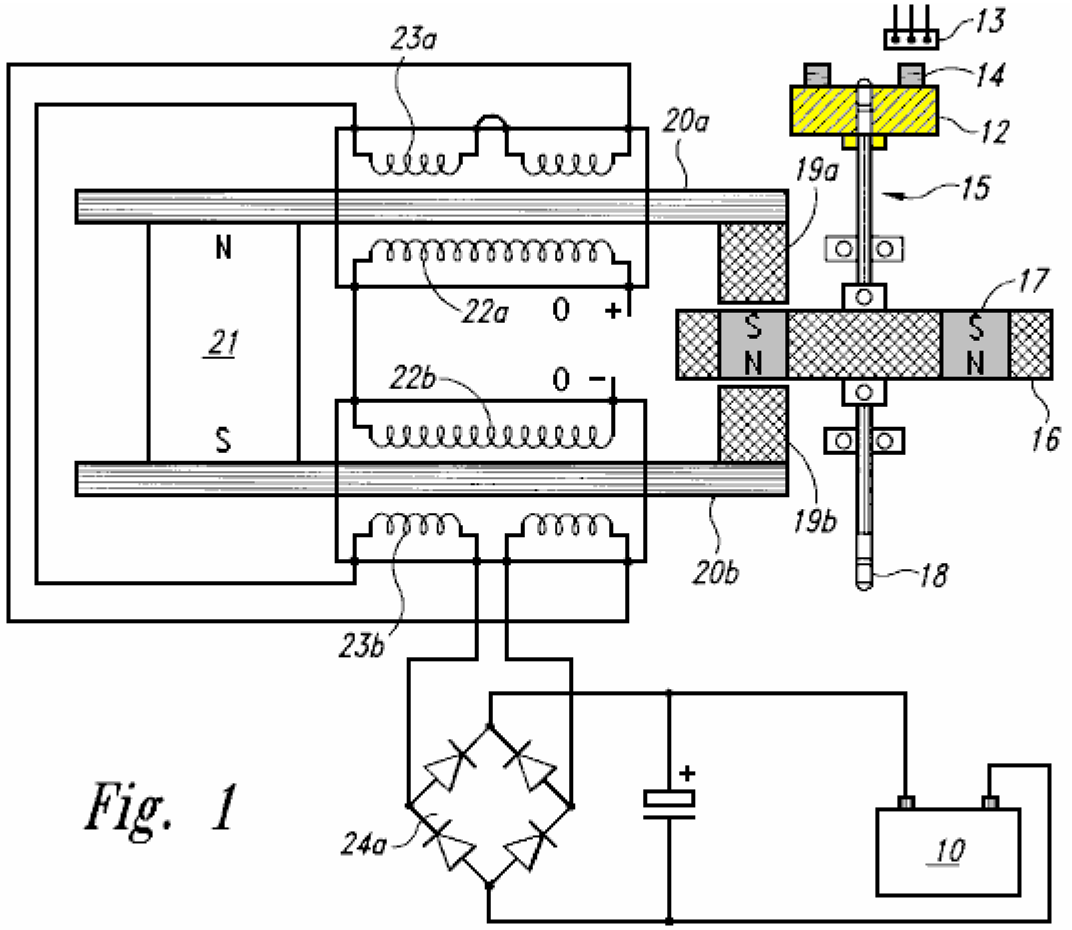

Fig. 1

Fig.1a is a side view of a timing wheel and magnetic Hall-effect sensor of the back EMF motor generator.

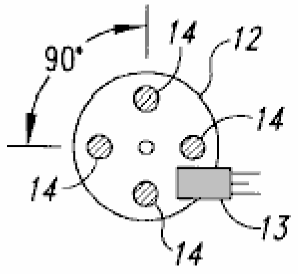

Fig. 1A

Fig.1b is a side view of the rotor of the back EMF motor generator.

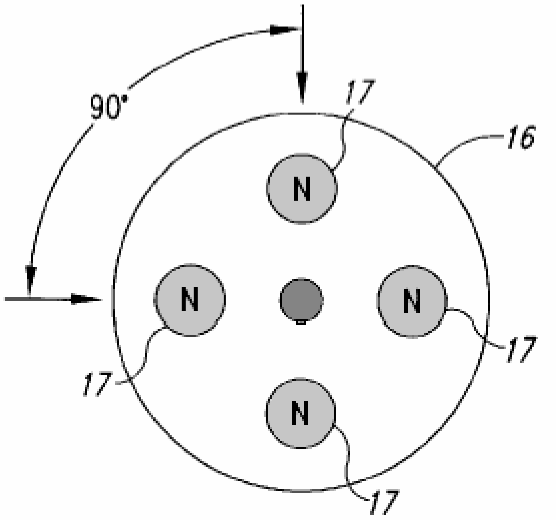

Fig. 1B

Fig.2 is a schematic drawing incorporating circuitry for the back EMF motor generator.

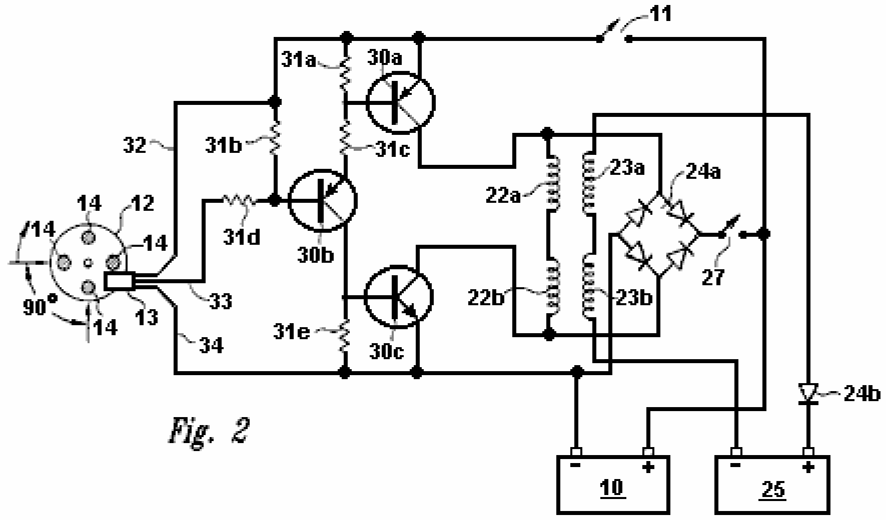

Fig. 2

Fig.3 is a box diagram showing the relationships of the back EMF motor generator circuitry.

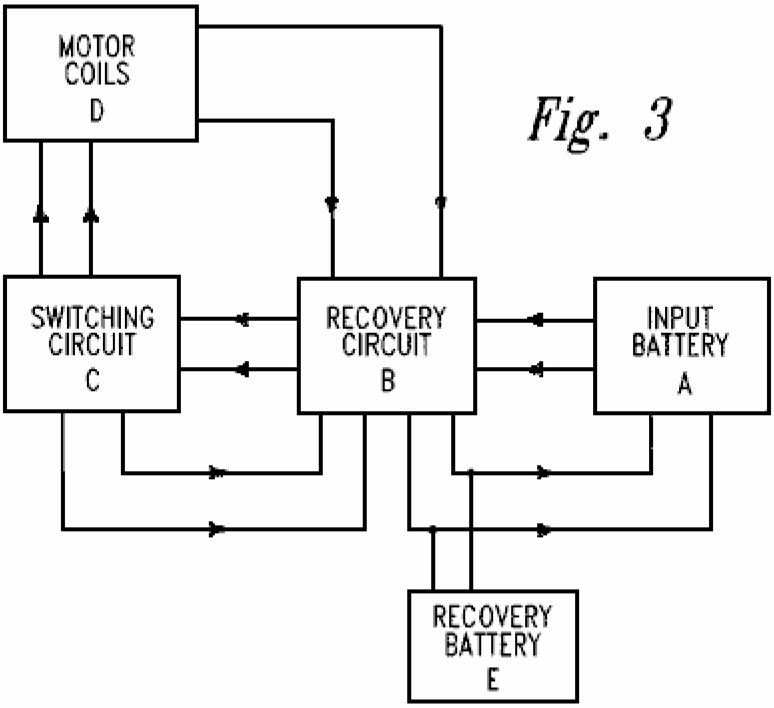

DETAILED DESCRIPTION OF THE INVENTION

The present invention is a device and method for creating a back EMF permanent electromagnetic motor generator. As described in the Background Information, this new motor generator conforms to all applicable electrodynamic laws of physics and is in harmony with the law of the conservation of energy, the laws of electromagnetism and other related natural laws.

The back EMF permanent electromagnetic motor generator is comprised of a combination of electrical, material and magnetic elements, arranged to capture available electromagnetic energy (back EMF) in a recovery rectifier or single diode from output coils. The capturing of back EMF energy is also known as 'regauging'. As an arbitrary starting point in describing this invention, an input battery, as a means of energy, sends power through a power on-off switch and then to a timing mechanism, such as a magnetic timing switch (a semiconductor Hall-effect magnetic pickup switch) which is triggered by a magnet on a timing wheel. The timing wheel may contain any number of magnets (i.e. one or more), with the South poles facing outwards and aligned with the Hall-effect pickup switch.

The timing wheel is mounted at the end of a shaft which is located along the centreline of a rotor, which in turn, may contain any number of magnets (i.e. two or more). The rotor magnets are arranged so that they have the same polarity and are equidistant from each other. The shaft has the timing wheel mounted at one end, the rotor, and then some means for performing work, such as a power take off at the opposite end. However, there are other embodiments in which the position of the rotor, timing wheel and power take-off have other configurations. The rotor is mounted on a platform or housing which is fixed in a stationary position within a stator.

The stator is comprised of a permanent magnet connected to a means for conducting electromagnetic energy such as two parallel bars, each bar having a magnetised pole piece at one end. The conduction material of the bar may be ferrous, powdered iron, silicon steel, stainless magnetic steel, laminations of conductive material or any other magnetic conductive material. Each bar has an input coil placed around it. The coil may be constructed from copper, aluminium or any other suitable conductive material. The primary or input coil is connected to the switching circuit. A second coil on top of the input coil becomes a secondary or output coil. The secondary or output coil is connected to the recovery circuit. The rotor is located symmetrically between the pole pieces of the bars of the stator and it contains a series of magnets all having the same polarity, North or South, with each magnet in the rotor being in aligned with the pole piece as the rotor rotates.

When the rotor is energised from the battery of the switching circuit, there is an initial magnetic field that is instantly overcome as the magnetised pole pieces align with the rotor magnets. As the rotor begins to move, increasing electromagnetic energy is produced as a result of flux gaiting from the aligned magnets of the rotor and pole pieces. The coils surrounding the bars "buck" the permanent magnet connecting the bars. This is known as the "buck boosting" principle. When the permanent magnet is bucked by the coils, it reverses the polarity of the pole pieces which are aligned with the rotor magnets causing the rotor to increase its rate of rotation. The energy available from the fields that are collapsing in the primary and secondary coils, (which creates the back EMF within the system), is now in non-equilibrium. Energy can now be put back into the system via the switching circuitry. Available energy captured from the back EMF, may be applied in different directions, including re-energising the input battery, storage in a capacitor, conversion by a recovery rectifier to be stored in the input battery, a capacitor or a secondary or recovery battery. Recovery rectifiers are used to convert this AC to DC. Available energy may be used to energise an electric bulb, fan or any other uses.

The shaft in the centre of the rotor can transfer energy in the form of work through a power take-off. The power take-off may be connected to any number of secondary shafts, wheels, gears and belts to increase or reduce torque.

This is a description of the basic invention, however, there are an innumerable number of combinations and embodiments of stators, rotors, Hall-effect magnetic pickup switches, coils, recovery rectifiers and electronic connecting modes that may be combined on a single shaft or several shafts connected in various combinations and sequences, and of various sizes. There may be any number of stators to one rotor, (however, there can be only one active rotor if there is a single stator). The number of Hall-effect pickup switches may vary, for example, in the case of multiple stators of high resistant coils, the coils may be parallel to form a low resistant coil so that one Hall-effect pickup with one circuit may fire all of the stators at the same time. The number of magnets in both the timing wheel and the rotor may also vary in number as well as the size and strength of the magnets. Any type of magnet may be used. The number of turns on both the input and output coils on each conducting bar may also vary in number and in conductive material.

The motor generator, as shown in **Fig.1**, a top perspective view of a single stator, single rotor back EMF motor and is comprised of a means of providing energy, such as input battery **10** connected to power switch **11** (shown in **Fig.2**) and Hall-effect magnetic pickup switch **13**. Magnetic pickup **13** interfaces with timing wheel **12** to form a timing switch. Timing wheel **12** contains four magnets **14** with the South pole of each said magnet facing outward towards magnetic pickup **13**. Timing wheel **12** is fixed at one end of shaft **15**. Located on shaft **15** is rotor **16**. Rotor **16** can be of any realistic size, and in this example the rotor contains four rotor magnets **17**. The rotor magnets **17** are arranged so all have the same polarity.

Opposite timing wheel **12** on shaft **15** is a means for performing work, such as a power take-off **18**. Rotor **16** is mounted in a fixed position with rotor magnets **17** in aligned with the magnetised pole pieces **19a** and **19b**. Each pole piece **19a** and **19b** is connected to iron bars **20a** and **20b**. These Iron bars are connected by a permanent magnet **21**. Wire is wrapped around iron bars **20a** and **20b** to form input coils **22a** and **22b**. Superimposed upon input coils **22a** and **22b** are output coils **23a** and **23b**. These output coils are connected to full wave bridge first recovery rectifier **24a** which then connects to battery **10**.

Fig.1a is a side view of the back EMF Motor Generator timing wheel **12** with Hall-effect magnetic pickup **13** positioned to be triggered by each of the four magnets **14** in turn as timing wheel **12** rotates. The magnets **14** have their South poles facing outward and they are spaced evenly with a 90 degree angular separation.

Fig.1b is a side view of rotor **16** with four rotor magnets **17** with 90 degree angular separation from each other and having the same polarity.

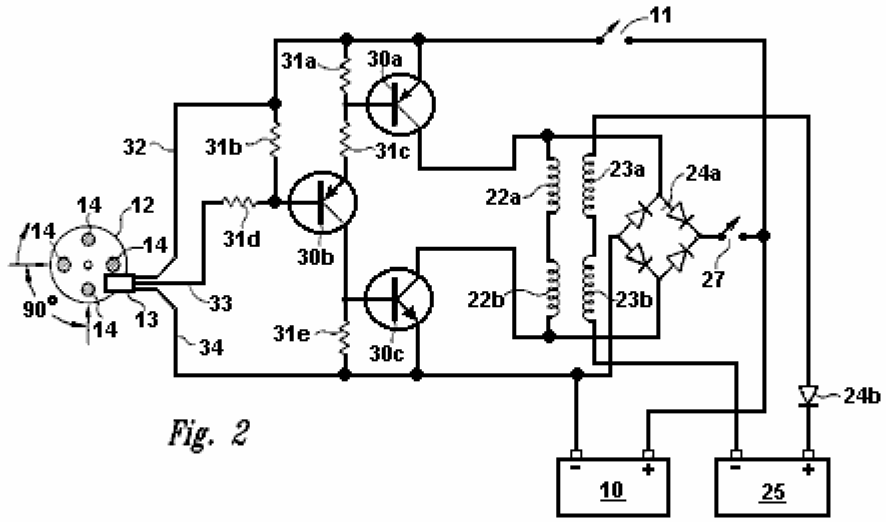

Fig. 2

Fig.2 is a schematic diagram of the motor generator circuitry showing input coil connections from input battery **10** through power switch **11**, transistors **30a,b,c** resistors **31a-e**, through power supply lead **32** (“VCC+”) and to magnetic pickup **13**. Magnetic pickup **13** is in aligned with timing wheel magnets **14** located on timing wheel **12**.

Collector lead **33** and ground lead **34** carry the signals from magnetic pickup **13**. When current is reversed, it flows through resistor **31e** and transistor **30c** to input battery **10**. Input coils **22a,b** send power to full wave bridge first recovery rectifier **24a** which then sends power through switch recovery **27** back into the system, and/or to the input battery **10**. Output coils **23a** and **23b** send power through single diode second recovery rectifier **24b** to recovery battery **25**.

In this particular embodiment, the value and type number of the components are as follows:
Hall-effect magnetic pickup switch **13** is a No. 3020;
Transistor **30a** is a 2N2955;
Transistor **30b** is an **MPS8599**;
Transistor **30c** is a 2N3055;
Resistors **31a** and **31b** are 470 ohms
Resistor **31b** is 2.2 K ohms
Resistor **31c** is 220 ohms
Resistor **31d** is 1 K ohms
Recovery rectifier **24a** is a 10 Amp, 400 volts bridge rectifier.

Fig.3 is a box diagram showing the flow of voltage from input battery **A**, through recovery circuit **B**, switching circuit **C** and motor coils **D**. Motor coils **D** send available back EMF energy through recovery circuit **B**, and then on to recovery battery **E** and input battery **A**. Available back EMF energy can also flow from switching circuit **C** to recovery circuit **B**.

In multiple stator/rotor systems, each individual stator may be energised one at a time or all of the stators may be energised simultaneously. Any number of stators and rotors may be incorporated into the design of such multiple stator/rotor motor generator combinations. However, while there may be several stators per rotor, there can only be one rotor for a single stator. The number of stators and rotors that would comprise a particular motor generator is dependent upon the amount of power required in the form of watts. The desired size and horsepower of the motor determines whether the stators will be in parallel or fired sequentially by the magnetic Hall-effect pickup or pickups. The number of magnets incorporated into a particular rotor is dependent upon the size of the rotor and power required of the motor generator. In a multiple stator/rotor motor generator, the timing wheel may have one or more magnets, but must have one magnet Hall-effect pickup for each stator if the stators are not arranged in parallel. The back EMF energy is made available through the reversing of the polarity of the magnetised pole pieces thus collapsing the field around the coils and reversing the flow of energy to the recovery diodes, which are capturing the back EMF.

Individual motors may be connected in sequence, with each motor having various combinations of stators and rotors, or they may be connected in parallel. Each rotor may have any number of magnets ranging from a minimum of 2 to maximum of 60. The number of stators for an individual motor may range from 1 to 60 with the number of conducting bars ranging from 2 to 120.

What distinguishes this motor generator from all others is the presence of a permanent magnet connecting the two conducting bars which transfer magnetic energy through the pole pieces to the rotor, thereby attracting the rotor between the pole pieces. With the rotor attracted in between the two pole pieces, the coils switch the polarity of the magnetic field of the pole pieces so that the rotor is repelled out. Therefore there is no current and voltage being used to attract the rotor. The only current being used is the repulsion of the rotor between the two conductive bar pole pieces thereby requiring only a small amount of current to repel the rotor. This is known as ‘a regauging system’ and allows the capturing of available back EMF energy.

Finally, although the invention has been described with reference of particular means, materials and embodiments, it is to be understood that the invention is not limited to the particulars disclosed and extends to all equivalents within the scope of the claims.

JOHN BEDINI: BATTERY PULSE CHARGER

US Patent Application 2003/117111 26th June 2003 Inventor: John C. Bedini

DEVICE AND METHOD FOR PULSE-CHARGING A BATTERY AND FOR DRIVING OTHER DEVICES WITH A PULSE

This is a slightly reworded copy of this patent application which shows a method of pulse-charging a battery bank or powering a heater and/or a motor. John Bedini is an intuitive genius with very considerable practical ability, so any information coming from him should be considered most carefully. At the end of this document there is some additional information not found in the patent.

ABSTRACT

This two-phase solid-state battery charger can receive input energy from a variety of sources including AC current, a battery, a DC generator, a DC-to-DC inverter, solar cells or any other compatible source of input energy. Phase 1 is the charging phase and Phase 2 is the discharge phase, where a signal, or current, passes through a dual timing switch which independently controls two channels, thus producing the two phases.

The dual timing switch is controlled by a logic chip, or pulse width modulator. A potential charge is allowed to build up in a capacitor bank. The capacitor bank is then disconnected from the energy input source and then a high voltage pulse is fed into the battery which is there to receive the charge. The momentary disconnection of the capacitor from the input energy source allows a free-floating potential charge in the capacitor. Once the capacitor has completed discharging the potential charge into the battery, the capacitor disconnects from the charging battery and re-connects to the energy source, thus completing the two-phase cycle.

TECHNICAL FIELD

This invention relates generally to a battery pulse-charger using a solid-state device and method where the current going to the battery is not constant. The signal or current is momentarily switch-interrupted as it flows through either the first channel, (the charging phase), or the second channel, (the discharging phase). This two-phase cycle alternates the signal in the two channels thereby allowing a potential charge in a capacitor to disconnect from its power source an instant before the capacitor discharges its stored potential energy into a battery set up to receive the capacitor's stored energy. The capacitor is then disconnected from the battery and re-connected to the power source upon completion of the discharge phase, thereby completing the charge-discharge cycle. The battery pulse-charger can also drive devices, such as a motor and a heating element, with pulses.

BACKGROUND AND PRIOR ART

Present day battery chargers use a constant charge current in their operation with no momentary disconnection of the signal or current as it flows either: (1) from a primary energy source to the charger; or (2) from the charger itself into a battery for receiving the charge. Some chargers are regulated to a constant current by any of several methods, while others are constant and are not regulated. There are no battery chargers currently in the art or available wherein there is a momentary signal or current disconnection between the primary energy source and the charger capacitors an instant before the capacitors discharge the stored potential energy into a battery receiving the pulse charge. Nor are there any chargers in the art that disconnect the charger from the battery receiving the charge when the charger capacitors receive energy from the primary source. The momentary current interruption allows the battery a short "rest period" and requires less energy from the primary energy source while putting more energy into the battery receiving the charge while requiring a shorter period of time to do it.

SUMMARY OF THE INVENTION

One aspect of the invention relates to a solid-state device and method for creating a pulse current to pulse-charge a battery or a bank of batteries in which a new and unique method is used to increase and preserve, for a longer period of time, the energy stored in the battery, as compared to constant-current battery chargers. The device uses a timed pulse to create a DC pulse waveform to be discharged into the battery receiving the charge.

One embodiment of the Invention uses a means for dual switching such as a pulse-width modulator (PWM), for example, a logic chip SG3524N PWM, and a means for optical coupling to a bank of high-energy capacitors to store a timed initial pulse charge. This is the charge phase, or phase 1. The charged capacitor bank then discharges the stored high energy into the battery receiving the charge in timed pulses. Just prior to discharging the stored energy into the battery, the capacitor bank is momentarily disconnected from the power source, thus completing the charge phase, and thereby leaving the capacitor bank as a free-floating potential charge disconnected from the primary energy source to then be discharged into the battery. The transfer of energy from the capacitor bank to the battery completes the discharge phase, or phase 2. The two-phase cycle now repeats itself.

This embodiment of the battery pulse-charger works by transferring energy from a source, such as an AC source, to an unfiltered DC source of high voltage to be stored in a capacitor or a capacitor bank. A switching regulator is set to a timed pulse, for example, a one second pulse that is 180 degrees out of phase for each set of switching functions. The first function is to build the charge in the capacitor bank from the primary energy source; the second function is to disconnect the power source from the capacitor bank; the third function is to discharge the stored high voltage to the battery with a high voltage spike in a timed pulse, for example, a one second pulse; and the fourth function is to re-connect the capacitor bank to the primary energy source.

The device operates through a two-channel on/off switching mechanism or a gauging/re-gauging function wherein the charger is disconnected from its primary energy source an instant before the pulse-charger discharges the high-energy pulse into the battery to be charged. As the primary charging switch closes, the secondary discharging switch opens, and vise-versa in timed pulses to complete the two phase cycle.

The means for a power supply is varied with several options available as the primary energy source. For example, primary input energy may come from an AC source connected into the proper voltage (transformer); from an AC generator; from a primary input battery; from solar cells; from a DC-to-DC inverter; or from any other adaptable source of energy. If a transformer is the source of primary input energy, then it can be a standard rectifying transformer used in power supply applications or any other transformer applicable to the desired function. For example, it can be a 120-volt to 45-volt AC step-down transformer, and the rectifier can be a full-wave bridge of 200 volts at 20 amps, which is unfiltered when connected to the output of the transformer. The positive output terminal of the bridge rectifier is connected to the drains of the parallel connected field-effect transistors, and the negative terminal is connected to the negative side of the capacitor bank.

The Field Effect Transistor (FET) switches can be IRF260 FETs, or any other FET needed to accomplish this function. All the FETs are connected in parallel to achieve the proper current handling capacity for the pulses. Each FET may be connected through a 7-watt, 0.05-ohm resistor with a common bus connection at the source. All the FET gates may be connected through a 240-ohm resistor to a common bus. There may also be a 2 K-ohm resistor wired between the FET gates and the drain bus.

A transistor, for example an MJE15024, can be used as a driver for the gates, driving the bus, and in turn, an optical coupler powers the driver transistor through the first channel. A first charging switch is used to charge the capacitor bank, which acts as a DC potential source to the battery. The capacitor bank is then disconnected from the power rectifier circuit. The pulse battery charger is then transferred to a second field effect switch through the second channel for the discharge phase. The discharge phase is driven by a transistor, and that transistor is driven via an optical coupler. When the second (discharge) switch is turned on, the capacitor bank potential charge is discharged into the battery waiting to receive the charge. The battery receiving the charge is then disconnected from the pulse-charger capacitor bank in order to repeat the cycle. The pulse-charger may have any suitable source of input power including:

(1) solar panels to raise the voltage to the capacitor bank;
(2) a wind generator;
(3) a DC-to-DC inverter;
(4) an alternator;
(5) an AC motor generator;
(6) a static source such as a high voltage spark; and
(7) other devices which can raise the potential of the capacitor bank.

In another embodiment of the invention, one can use the pulse-charger to drive a device such as a motor or heating element with pulses of energy.

BRIEF DESCRIPTION OF THE DRAWINGS

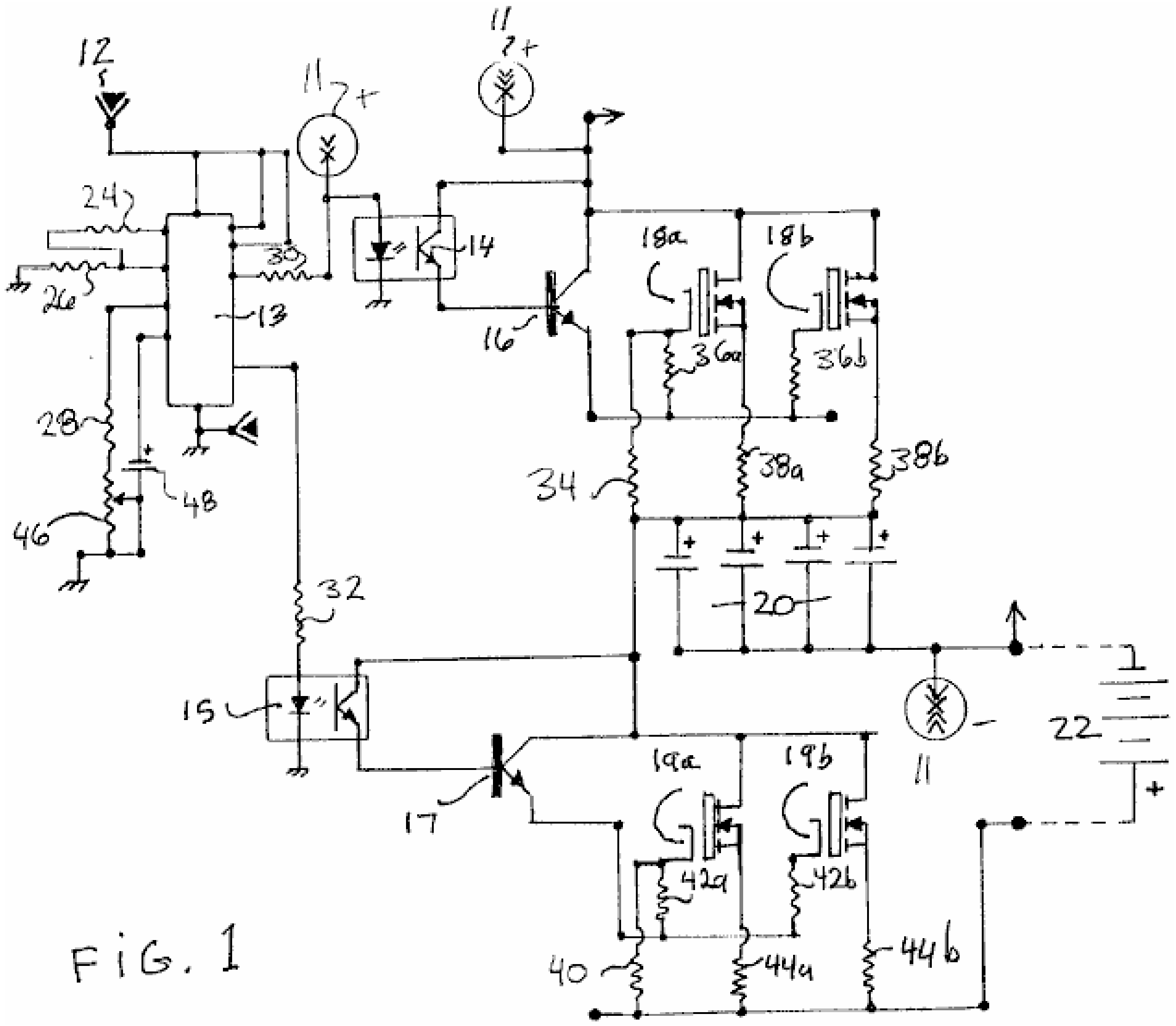

FiG. 1

Fig.1 is a schematic drawing of a solid-state pulse-charger according to an embodiment of the invention.

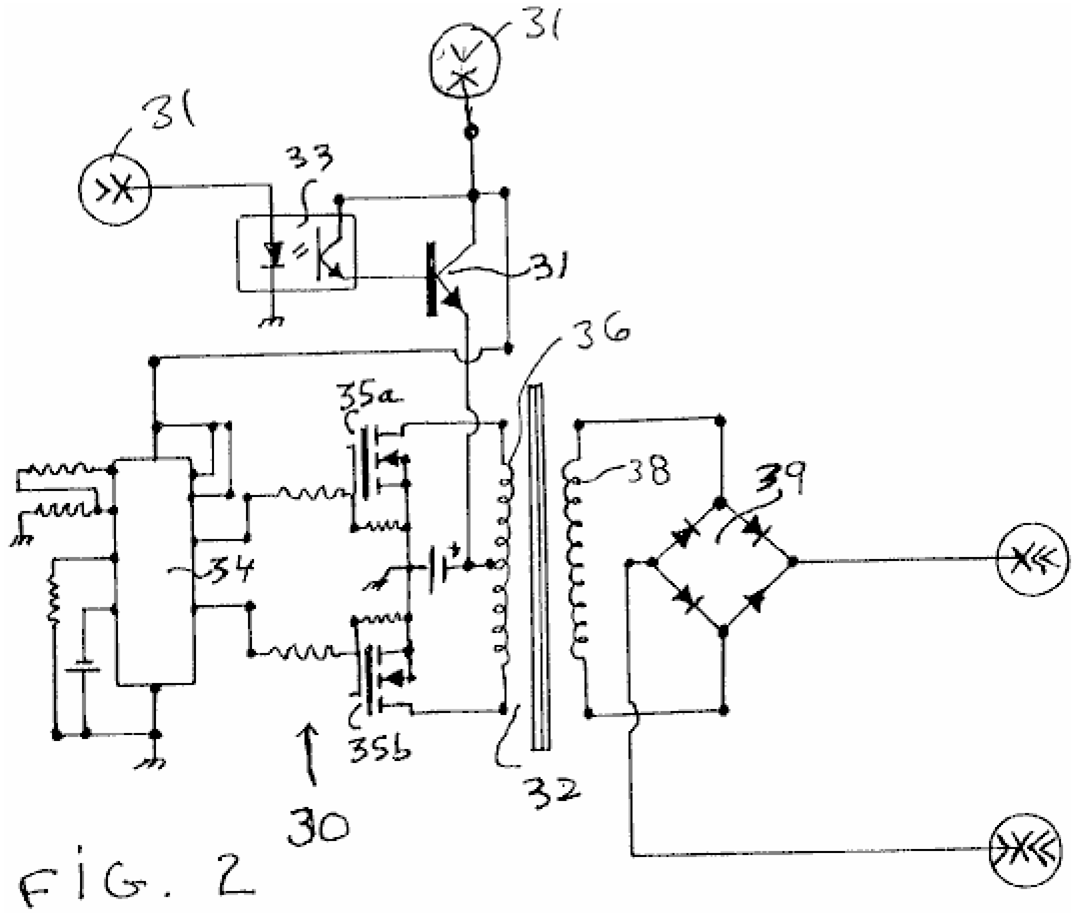

FiG. 2

Fig.2 is a schematic drawing of a conventional DC-to-DC converter that can be used to provide power to the pulse-charger of Fig.1 according to an embodiment of the invention.

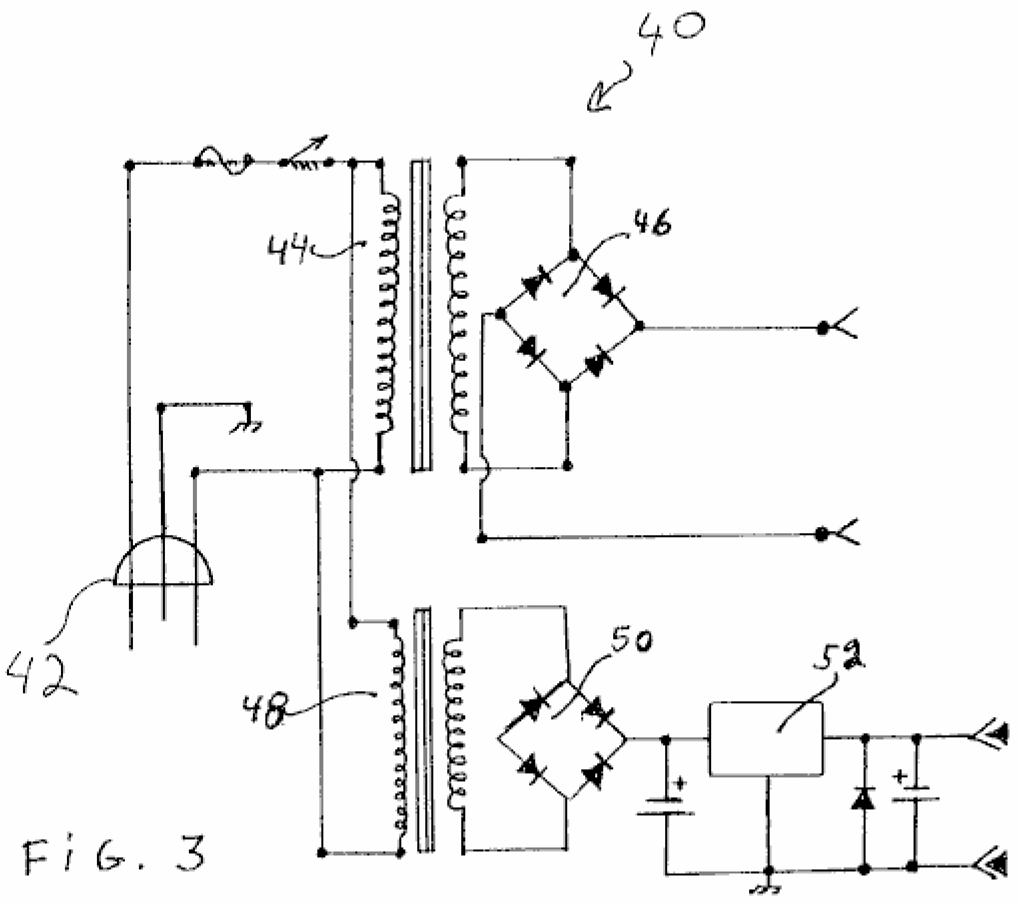

Fi G. 3

Fig.3 is a schematic drawing of a conventional AC power supply that can be used to provide power to the pulse-charger of Fig.1 according to an embodiment of the invention.

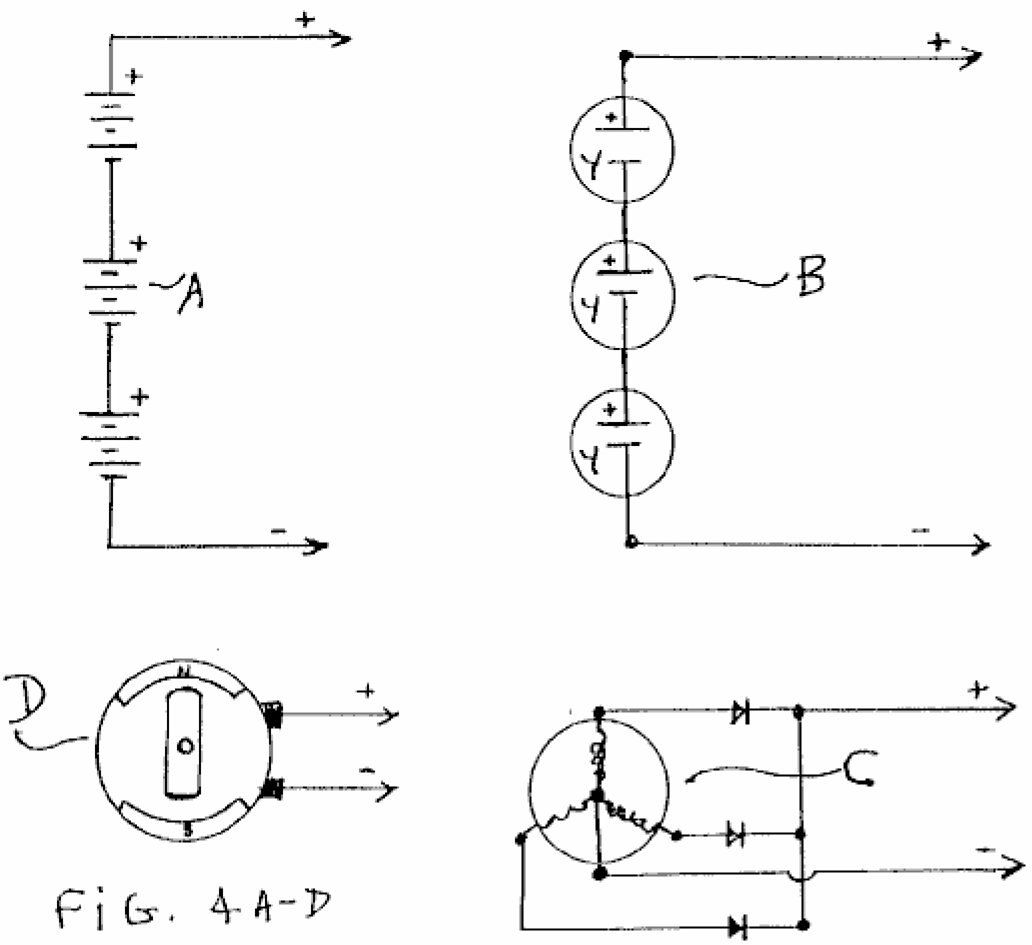

FiG. 4A-D

Fig.4A to Fig.4D are schematic drawings of other conventional power supplies that can be used to provide power to the pulse-charger of Fig.1 according to an embodiment of the invention.

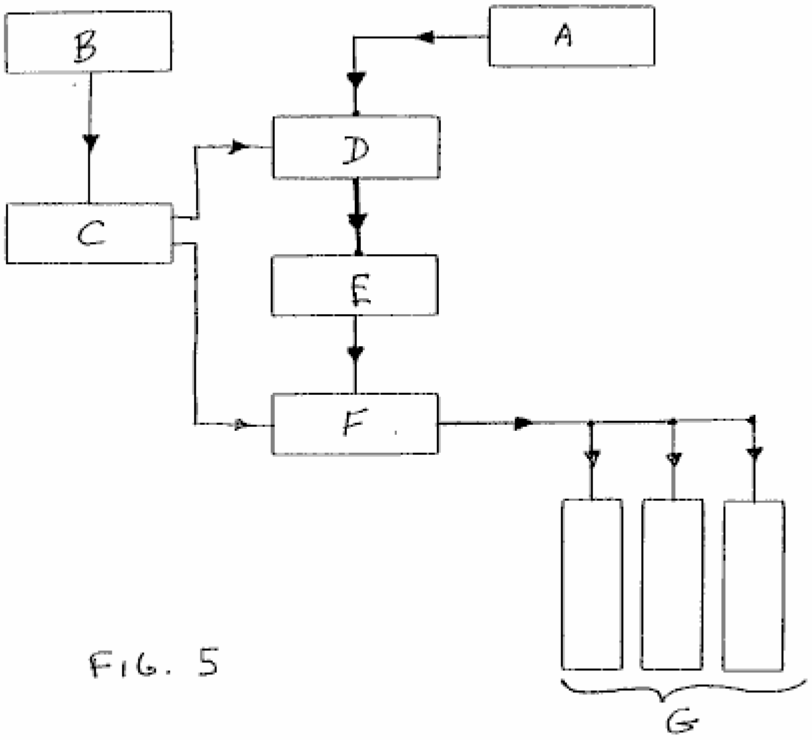

FiG. 5

Fig.5 is a block diagram of the solid-state pulse-charger of Fig.1 according to an embodiment of the invention.

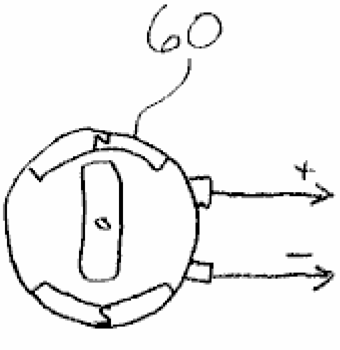

FIG. 6

Fig.6 is a diagram of a DC motor that the pulse-charger of Fig.1 can drive according to an embodiment of the invention.

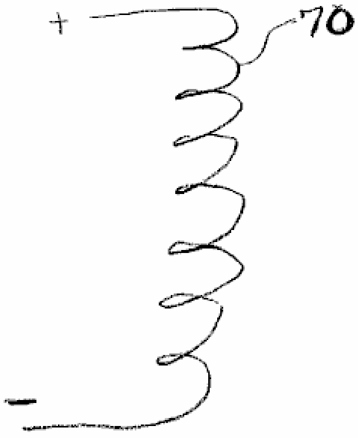

FIG. 7

Fig.7 is a diagram of a heating element that the pulse-charger of Fig.1 can drive according to an embodiment of the invention.

DETAILED DESCRIPTION OF THE INVENTION

An embodiment of the present invention is a device and method for a solid-state pulse-charger that uses a stored potential charge in a capacitor bank. The solid-state pulse-charger comprises a combination of elements and circuitry to capture and store available energy in a capacitor bank. The stored energy in the capacitors is then pulse-charged into the battery to be charged. In one version of this embodiment, there is a first momentary disconnection between the charger and the battery receiving the charge during the charge phase of the cycle, and a second momentary disconnection between the charger and the input energy source during the discharge phase of the cycle.

As a starting point, and an arbitrary method in describing this device and method, the flow of an electrical signal or current will be tracked from the primary input energy to final storage in the battery receiving the pulse charge.

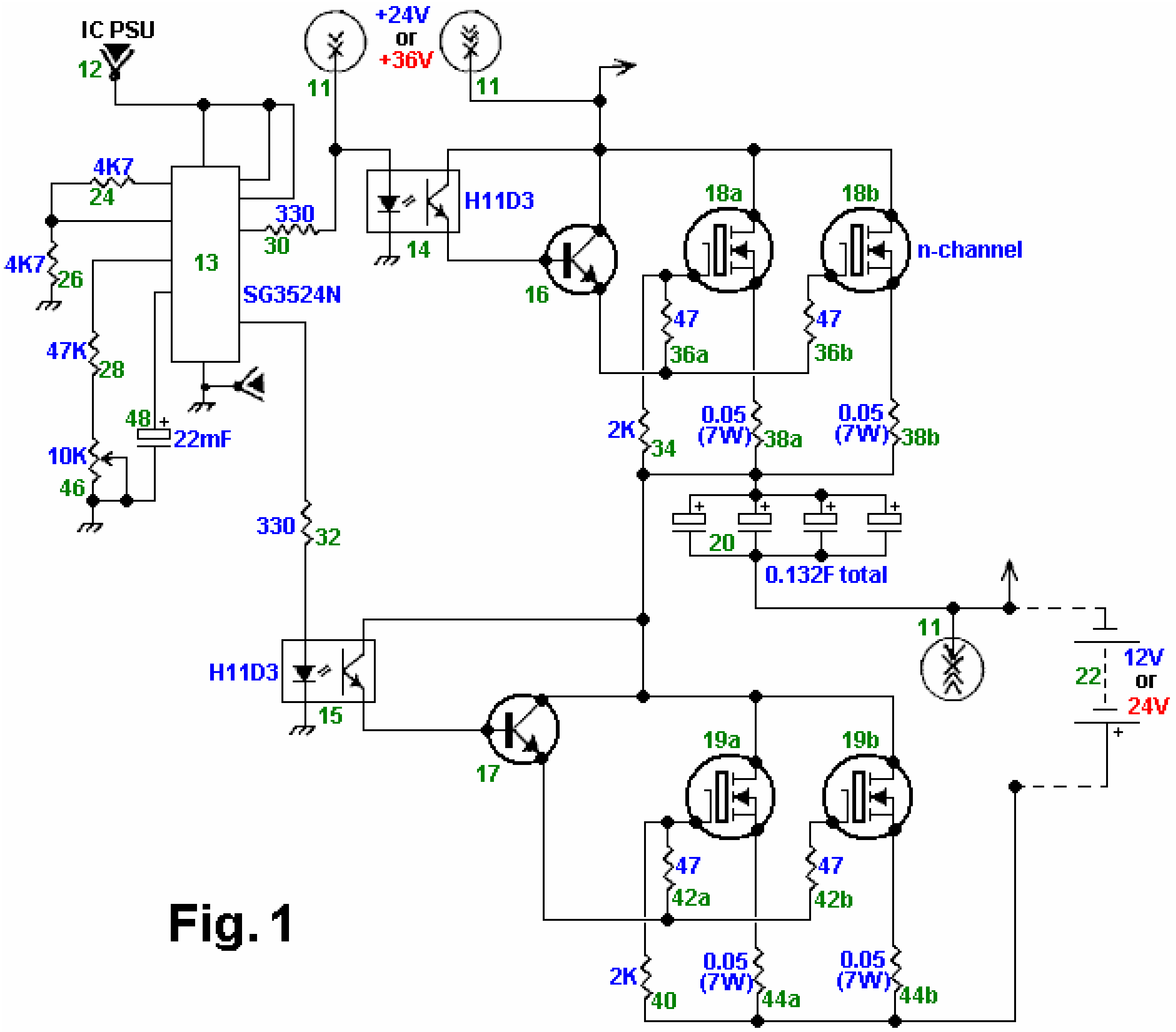

Fig. 1

Fig.1 is a schematic drawing of the solid-state pulse-charger according to an embodiment of the invention. As shown in **Fig.1**, the primary input energy source to the pulse-charger is a power supply **11**, examples of which are shown in **Fig.2**, **Fig.3**, and **Figs.4A-4D**. A 12-volt battery, as a low voltage energy source **12**, drives a dual switching means of control such as a logic chip or a pulse-width modulator (PWM) **13**.

Alternatively, the voltage from the power supply **11** may be converted to a voltage suitable to power the PWM **13**. The PWM **13** may be an SG3524N logic chip, and functions as an oscillator or timer to drive a 2-channel output with "on/off" switches that are connected when on to either a first optical isolator **14**, or alternatively, to a second optical isolator **15**. The first and second optical isolators **14** and **15** may be H11D3 optical isolators. When the logic chip **13** is connected to a first channel, it is disconnected from a second channel, thus resulting in two phases of signal direction; phase 1, a charge phase, and phase 2, a discharge phase.

When the logic chip **13** is switched to the charge phase, the signal flows to the first optical isolator **14**. From the optical isolator **14**, the signal continues its flow through a first NPN power transistor **16** that activates an N-channel MOSFET **18a** and an N-channel MOSFET **18b**. Current flowing through the MOSFETs **18a** and **18b** builds up a voltage across a capacitor bank **20**, thereby completing the charge phase of the switching activity.

The discharge phase begins when the logic chip **13** is switched to the second channel, with current flowing to the second optical isolator **15** and then through a second NPN power transistor **17**, which activates an N-channel MOSFET **19a** and an N-channel MOSFET **19b**. After the logic chip **13** closes the first channel and opens the second channel, the potential charge in the capacitor bank **20** is free floating between the power supply **11**, from which the capacitor bank **20** is now disconnected, and then connected to a battery **22** to receive the charge. It is at this point in time that the potential charge in the capacitor bank **20** is discharged through a high-energy pulse into the battery **22** or, a bank (not shown) of batteries. The discharge phase is completed once the battery **22** receives the charge. The logic chip **13** then switches the second channel closed and opens the first channel thus completing the charge-discharge cycle. The cycle is repetitive with the logic chip **13** controlling the signal direction into either channel one to the capacitor bank, or to channel two to the battery **22** from the capacitor bank. The battery **22** is given a momentary rest period without a continuous current during the charge phase.

The component values for the described embodiment are as follows. The resistors **24**, **26**, . . . **44b** have the following respective values: 4.7K, 4.7K, 47K, 330, 330, 2K, 47, 47, 0.05(7W), 0.05(7W), 2K, 47, 47, 0.05(7 W), and 0.05(7W). The potentiometer **46** is 10K, the capacitor **48** is 22 mF, and the total capacitance of the capacitor bank **20** is 0.132F. The voltage of the battery **22** is between 12-24 V, and the voltage of the power supply **11** is 24-50 V such that the supply voltage is approximately 12-15 V higher than the battery voltage.

Other embodiments of the pulse-charger are contemplated. For example, the bipolar transistors **16** and **17** may be replaced with field-effect transistors, and the transistors **18a**, **18b**, **19a**, and **19b** may be replaced with bipolar or insulated-gate bipolar (IGBT) transistors. Furthermore, one can change the component values to change the cycle time, the peak pulse voltage, the amount of charge that the capacitor bank **20** delivers to the battery **22**, etc. In addition, the pulse-charger can have one or more than two transistors **18a** and **18b**, and one or more than two transistors **19a** and **19b**.

Still referring to **Fig.1**, the operation of the above-discussed embodiment of the pulse-charger is discussed. To begin the first phase of the cycle during which the capacitor bank **20** is charged, the logic circuit **13** deactivates the isolator **15** and activates the isolator **14**. Typically, the circuit **13** is configured to deactivate the isolator **15** before or at the same time that it activates the isolator **14**, although the circuit **13** may be configured to deactivate the isolator **15** after it activates the isolator **14**.

Next, the activated isolator **14** generates a base current that activates the transistor **16**, which in turn generates a current that activates the transistors **18a** and **18b**. The activated transistors **18a** and **18b** charge the capacitors in the bank **20** to a charge voltage equal or approximately equal to the voltage of the power supply **11** less the lowest threshold voltage of the transistors **18a** and **18b**. To begin the second phase of the cycle during which the capacitor bank **20** pulse charges the battery **22**, the logic circuit **13** deactivates the isolator **14** and activates the isolator **15**. Typically, the circuit **13** is configured to deactivate the isolator **14** before or at the same time that it activates the isolator **15**, although the circuit **13** may be configured to deactivate the isolator **14** after it activates the isolator **15**.

Next, the activated isolator **15** generates a base current that activates the transistor **17**, which in turn generates a current that activates the transistors **19a** and **19b**. The activated transistors **19a** and **19b** discharge the capacitors in the bank **20** into the battery **22** until the voltage across the bank **20** is or is approximately equal to the voltage across the battery **22** plus the lowest threshold voltage of the transistors **19a** and **19b**. Alternatively, the circuit **13** can deactivate the isolator **15** at a time before the bank **20** reaches this level of discharge. Because the resistances of the transistors **19a** and **19b**, the resistors **44a** and **44b**, and the battery **22** are relatively low, the capacitors in the bank **20** discharge rather rapidly, thus delivering a pulse of current to charge the battery **22**. For example, where the pulse-charger includes components having the values listed above, the bank **20** delivers a pulse of current having a duration of about 100 ms and a peak of about 250 A.

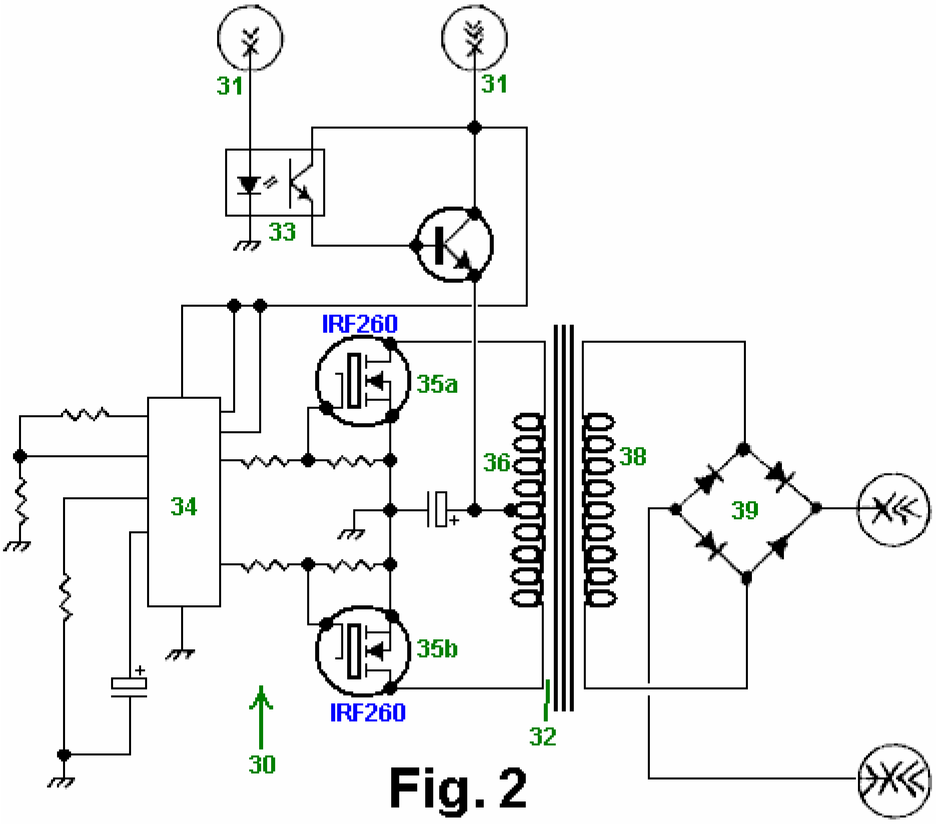

Fig. 2

Fig.2 is a schematic drawing of a conventional DC-to-DC converter **30** that can be used as the power supply **11** of **Fig.1** according to an embodiment of the invention. A DC-to-DC converter converts a low DC voltage to a higher DC voltage or vice-versa. Therefore, such a converter can convert a low voltage into a higher voltage that the pulse-charger of **Fig.1** can use to charge the capacitor bank **20** (**Fig.1**). More specifically, the converter **30** receives energy from a source **31** such as a 12-volt battery. An optical isolator sensor **33** controls an NPN power transistor which provides a current to a primary coil **36** of a power transformer **32**. A logic chip or pulse width modulator (PWM) **34** alternately switches on and off an IRF260 first N-channel MOSFET **35a** and an IRF260 second N-channel MOFSET **35b** such that when the MOSFET **35a** is on the MOSFET **35b** is off and vice-versa. Consequently, the switching MOSFETs **35a** and **35b** drive respective sections of the primary coil **36** to generate an output voltage across a secondary coil **38**. A full-wave bridge rectifier **39** rectifies the voltage across the secondary coil **38**, and this rectified voltage is provided to the pulse-charger of **Fig.1**. Furthermore, the secondary coil **38** can be tapped to provide a lower voltage for the PWM **13** of **Fig.1** such that the DC-to-DC converter **30** can be used as both the power supply **11** and the low-voltage supply **12** of **Fig.1**.

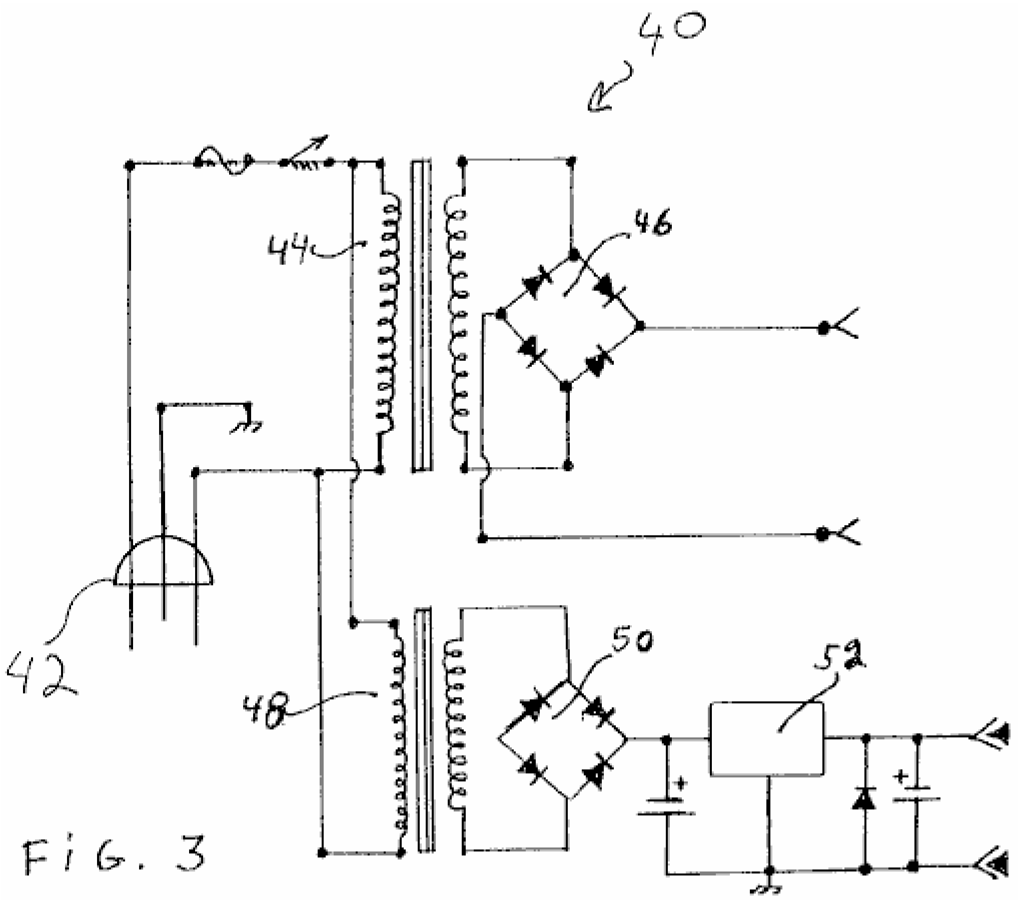

FiG. 3

Fig.3 is a schematic drawing of an AC power supply **40** that can be used as both the power supply **11** and the power supply **12** of **Fig.1** according to an embodiment of the invention. The power input **42** to the supply **40** is 120V AC. A first transformer **44** and full-wave rectifier **46** compose the supply **11**, and a second transformer **48**, full-wave rectifier **50**, and voltage regulator **52** compose the supply **12**.

Fig.4A to **Fig.4D** are schematic drawings of various conventional primary energy input sources which can be used as the supply **11** and/or the supply **12** of **Fig.1** according to an embodiment of the invention. **Fig.4A** is a schematic drawing of serially coupled batteries. **Fig.4B** is a schematic drawing of serially-coupled solar cells. **Fig.4C** is a schematic drawing of an AC generator, and **Fig.4D** is a schematic drawing of a DC generator.

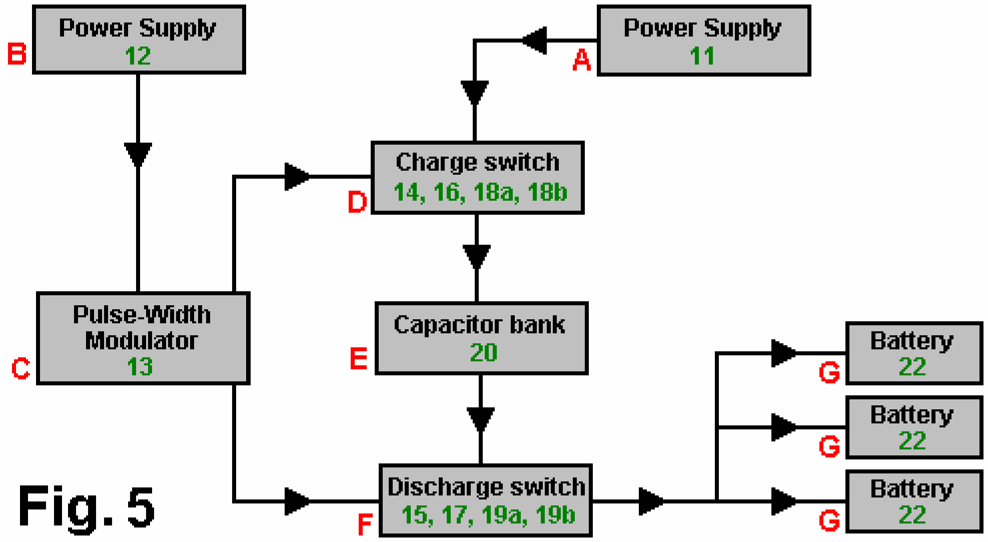

Fig. 5

Fig.5 is a block diagram of the solid-state pulse-charger of **Fig.1** according to an embodiment of the invention. Block **A** is the power supply **11**, which can be any suitable power supply such as those shown in **Fig.2**, **Fig.3**, **Figs.4A-4D**. Block **B** is the power supply **12**, which can be any suitable power supply such as a 12V DC supply or the supply shown in **Fig.3**. Block **C** is the PWM **13** and its peripheral components. Block **D** is the charge switch that includes the first optical isolator chip **14**, the first NPN power transistor **16**, the first set of two N-channel MOSFETs **18a** and **18b**, and their peripheral resistors. Block **E** is the capacitor bank **20**. Block **F** is the discharge switch that includes the second optical isolator chip **15**, the second NPN power transistor **17**, the second set of two N-channel MOSFETs **19a** and **19b**, and their peripheral resistors. Block **G** is the battery or battery bank **22** which is being pulse-charged.

A unique feature that distinguishes one embodiment of the pulse-charger described above, from conventional chargers is the method charging the battery with pulses of current instead of with a continuous current. Consequently, the battery is given a reset period between pulses.

Fig.6 is a diagram of a DC motor **60** that the pulse-charger of **Fig.1** can drive according to an embodiment of the invention. Specifically, one can connect the motor **60** in place of the battery **22** (**Fig.1**) such that the pulse-charger drives the motor with pulses of current. Although one need not modify the pulse-charger to drive the motor **60**, one can modify it to make it more efficient for driving the motor. For example, one can modify the values of the resistors peripheral to the PWM **13** (**Fig.1**) to vary the width and peak of the drive pulses from the capacitor bank **20** (**Fig.1**).

Fig.7 is a diagram of a heating element **70**, such as a dryer or water-heating element, that the pulse-charger of **Fig.1** can drive according to an embodiment of the invention. Specifically, one can connect the heating element **70** in place of the battery **22** (**Fig.1**) such that the pulse-charger drives the element with pulses of current. Although one need not modify the pulse-charger to drive the element **70**, one can modify it to make it more efficient for driving the element. For example, one can modify the values of the resistors peripheral to the PWM **13** (**Fig.1**) to vary the width and peak of the drive pulses from the capacitor bank **20** (**Fig.1**).

In the embodiments discussed above, specific electronic elements and components are used. However, it is known that a variety of available transistors, resistors, capacitors, transformers, timing components, optical isolators, pulse width modulators, MOSFETs, and other electronic components may be used in a variety of combinations to achieve an equivalent result. Finally, although the invention has been described with reference of particular means, materials and embodiments, it is to be understood that the invention is not limited to the particulars disclosed and extends to all equivalents within the scope of the claims.

CLAIMS

1. A solid-state pulse battery charger wherein input power from a primary source is stored as a potential charge in a capacitor bank, said capacitor bank then disconnected from said input power source through a dual timing means, said capacitor then connected to a battery to receive the potential charge, the charge then discharged into said battery from said capacitor, said battery then disconnected from said capacitor through said dual timing means, said capacitor then re-connected to said input power source completing a two phase switching cycle comprising:

- **a.** a means for providing input power;
- **b.** a means for timing a signal and a current flow in two phases, a charge phase and a discharge phase, through either a first channel output for charging said capacitor bank, or a second channel output for discharging stored energy from said capacitor into said battery, the current flowing from said first channel output through a first optical isolator and through a first NPN power transistor, said first transistor activating a first pair of N-channel MOSFETs with voltage stored as the potential charge in said capacitor bank, said capacitor disconnecting from said input power means by said timing means;
- **c.** said means for timing current flow connecting to said second channel output, current flowing from said second channel through a second optical isolator and through a second NPN power transistor, said second transistor activating a second pair of N-channel MOSFETs, said capacitor connecting to said battery, the potential charge discharging into said battery, said timing means disconnecting said capacitor from said battery, and connecting said capacitor to said power means.

2. The pulse-charger of claim 1 wherein the means for providing input power is an AC voltage current.

3. The pulse-charger of claim 1 wherein the means for providing input power is a battery.

4. The pulse-charger of claim 1 wherein the means for providing input power is a DC generator.

5. The pulse-charger of claim 1 wherein the means for providing input power is an AC generator.

6. The pulse-charger of claim 1 wherein the means for providing input power is a solar cell.

7. The pulse-charger of claim 1 wherein the means for providing input power is a DC-to-DC inverter.

8. The pulse-charger of claim 1 wherein the means for timing a signal is a pulse width modulator, said modulator an SG3524N logic chip.

9. The pulse-charger of claim 1 wherein the optical isolator is an H11D3 isolator.

10. The pulse-charger of claim 1 wherein the NPN power transistor is an MJE15024 transistor.

11. The pulse-charger of claim 1 wherein the N-channel MOSFET is a IRF260 MOSFET.

12. A solid-state pulsed battery charger wherein input power from a primary source is stored as a potential charge in a capacitor bank, said capacitor then disconnected from said input power source through a dual timing means, said capacitor then connected to a battery to receive the potential charge, the charge then discharged into said battery from said capacitor, said battery then disconnected from said capacitor through said dual timing means, said capacitor then reconnected to said input power source completing a two phase cycle comprising:

a. a means for providing said input power, said means either an AC voltage current, or a battery, or a DC generator, or an AC generator, or a solar cell, or a DC-to-DC inverter;

b. a means for timing a signal and a current flow, said timing means a pulse width modulator, logic chip SG3524N, the current flowing through either a first channel output, or a second channel output, the current flowing from said first channel output through a first optical isolator, said isolator an H11D3, and through a first NPN power transistor, said transistor an MJE15024, said first transistor activating a first pair of N-channel MOSFETs, said MOSFETs an IRF260, with current voltage stored as the potential charge in said capacitor bank, said capacitor disconnecting from said input power means by said logic chip;

c. said timing logic chip connecting to said second channel output, current flowing from said second channel through a second optical isolator, said isolator an H11D3, and through a second NPN power transistor, said second transistor an MJE15024, and activating a second pair of N-channel MOSFETs, said MOSFETs an IRF260, with current voltage stored as the potential charge in said capacitor bank, said capacitor disconnecting from said input power means by said logic chip, said capacitor connecting to said battery, the potential charge discharging into said battery, said timing means disconnecting said capacitor from said battery and connecting said capacitor to said power means.

13. A method of making a solid-state pulse battery charger wherein input power from a primary source is stored as a potential charge in a capacitor bank, said capacitor disconnected from said input power source through a dual timing means, said capacitor connected to a battery to receive the potential charge, said charge discharged into said battery from said capacitor, said battery disconnected from said capacitor through said dual timing means, said capacitor reconnected to said input power source completing a two phase cycle comprising the steps of:

a. providing a source of input power;

b. connecting a means for dual-timing said charger to control a signal or current flow through a first channel output comprising a first optical isolator, a first NPN power transistor and a first pair of N-channel MOSFETs;

c. capturing energy from said current and storing said energy in said capacitor bank thereby charging said capacitor;

d. switching the flow of said current using said timing device to a second channel comprising a second optical isolator, a second NPN power transistor and a second pair of N-channel MOSFETs, thus disconnecting said capacitor from said power source and connecting said capacitor to said battery;

e. discharging the potential charge into said battery;

f. switching the flow of the current using said timing device to said power source and said first channel to complete said cycle.

14. The pulse-charger of claim 13 wherein the means for providing input power is an AC voltage current.

15. The pulse-charger of claim 13 wherein the means for providing input power is a battery.

16. The pulse-charger of claim 13 wherein the means for providing input power is a DC generator.

17. The pulse-charger of claim 13 wherein the means for providing input power is an AC generator.

18. The pulse-charger of claim 13 wherein the means for providing input power is a solar cell.

19. The pulse-charger of claim 13 wherein the means for providing input power is a DC-to-DC inverter.

20. The pulse-charger of claim 13 wherein the means for timing a signal is a pulse width modulator, said modulator an SG3524N logic chip.

21. The pulse-charger of claim 13 wherein the optical isolator is an H11D3 isolator.

22. The pulse-charger of claim 13 wherein the NPN power transistor is an MJE15024 transistor.

23. The pulse-charger of claim 13 wherein the N-channel MOSFET is a IRF260 MOSFET.

24. A battery charger, comprising:
a supply node;
a charge node;
a switch circuit coupled to the supply and the charge nodes and operable to, allow a battery-charge current to flow into the charge node during a
battery-charge period, and prohibit the battery-charge current from flowing into the charge node during
a battery-rest period.

25. The battery charger of claim 24, further comprising:
a charge-storage device coupled to the switch circuit; and
wherein the switch circuit is operable to, allow the battery-charge current to flow from the charge-storage device into the charge node during the battery-charge period, and charge the charge-storage device during the battery-rest period.

26. The battery charger of claim 24, further comprising:
a capacitor coupled to the switch circuit; and
wherein the switch circuit is operable to, allow the battery-charge current to from the capacitor into the charge node
during the battery-charge period, and charge the capacitor during the battery-rest period.

27. A method, comprising:
charging a battery during a first period of a charge cycle; and
prohibiting the charging of the battery during a second period of the charge cycle.

28. The method of claim 27 wherein:
charging the battery comprises charging the battery with a charge current during the first period of the charge cycle; and
prohibiting the charging of the battery comprises prohibiting the charge current from flowing into the battery during the second period of the charge cycle.

29. The method of claim 27 wherein:
charging the battery comprises discharging a capacitor into the battery during the first period of the charge cycle; and
prohibiting the charging of the battery comprises uncoupling the capacitor from the battery during the second period of the charge cycle.

30. The method of claim 27, further comprising:
wherein charging the battery comprises discharging a capacitor into the battery during the first period of the charge cycle;
wherein prohibiting the charging of the battery comprises uncoupling the capacitor from the battery during the second period of the charge cycle; and
charging the capacitor during the second period of the charge cycle.

31. A method, comprising:
discharging a charge-storage device into a battery during a first period of a battery-charge cycle; and
uncoupling the charge-storage device from the battery and charging the charge-storage device during a second period of the battery-charge cycle.

32. The method of claim 31 wherein uncoupling the charge-storage device comprises uncoupling the charge-storage device from the battery before commencing charging of the charge-storage device.

33. The method of claim 31 wherein uncoupling the charge-storage device comprises uncoupling the charge-storage device from the battery after commencing charging of the charge-storage device.

34. The method of claim 31 wherein uncoupling the charge-storage device comprises simultaneously uncoupling the charge-storage device from the battery and commencing charging of the charge-storage device.

Notes:

The following information is NOT part of John's patent. It is information intended to be helpful, but as it is not coming from John it must be considered to be opinion and not fact. In the above diagrams, the SG3524N integrated circuit is likely to be unfamiliar to many readers, and an examination of the specification sheet does not make it obvious which pin connections are used in John's circuit. The following pin connections are believed to be correct, but cannot be guaranteed.

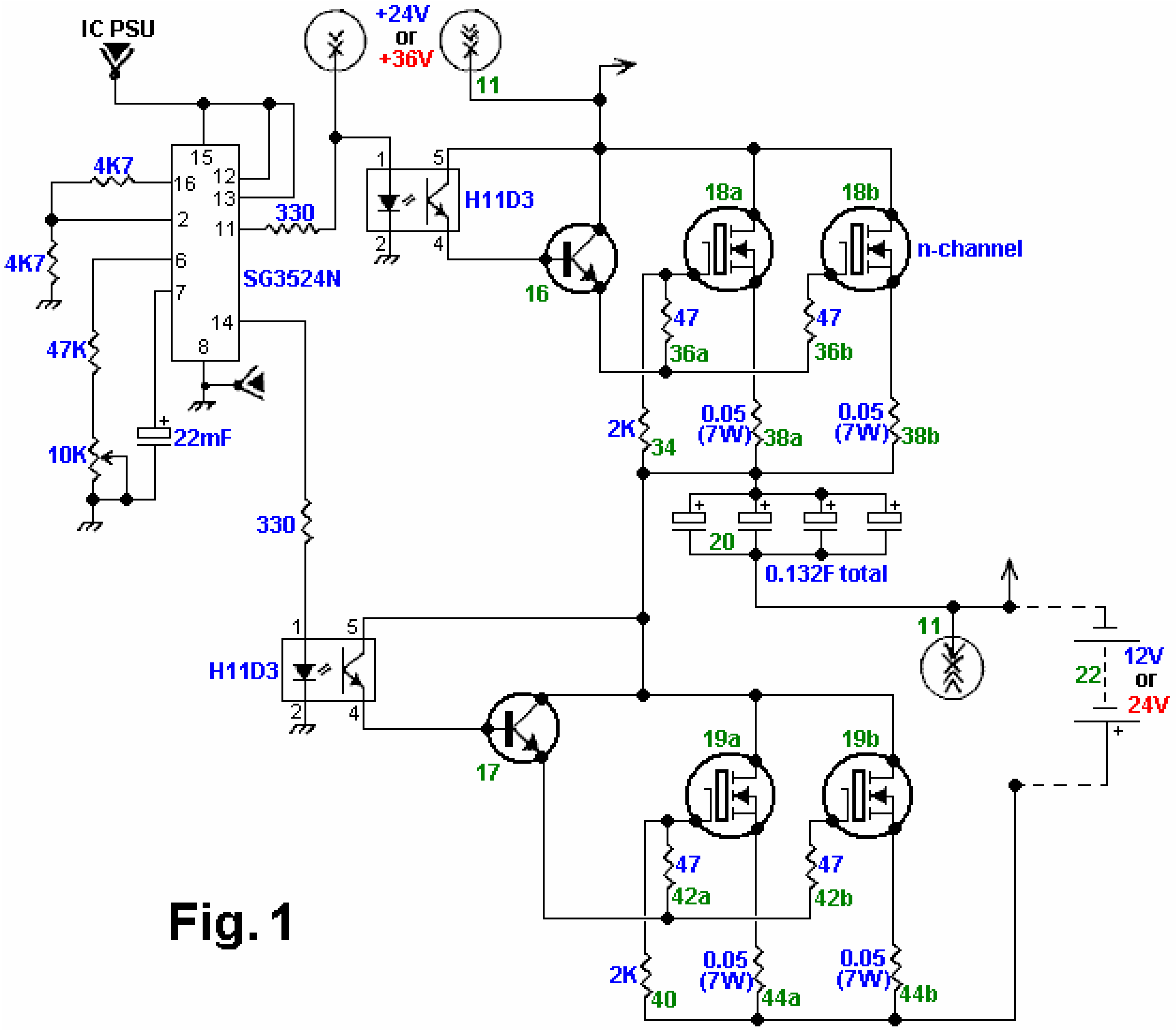

Fig. 1

In addition to these SG3524N pin connections, it is suggested that pins 1, 4 and 5 be connected to ground instead of just pin 8, and that a 100nF capacitor be connected from pin 9 to ground. Pins 3 and 10 are left unconnected. The pinouts for the chip are:

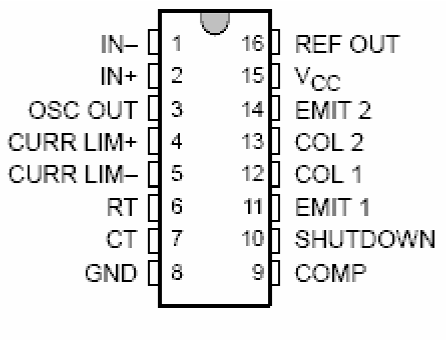

SG3524N

RICHARD WEIR and CARL NELSON

US Patent 7,033,406 25th April 2006 Inventors: Richard Weir and Carl Nelson

ELECTRICAL-ENERGY-STORAGE UNIT UTILISING CERAMIC AND INTEGRATED-CIRCUIT TECHNOLOGIES FOR REPLACEMENT OF ELECTROCHEMICAL BATTERIES

This patent shows an electrical storage method which is reputed to power an electric car for a 500 mile trip on a charge taking only five minutes to complete. This document is a very slightly re-worded copy of the original. It has been pointed out by Mike Furness that while a five minute recharge is feasible, it is not practical, calling for cables with a six-inch diameter. Also, the concept of recharging stations as suggested is also rather improbable as the electrical supply needed would rival that of a power station. However, if the charging time were extended to night time, then it would allow substantial driving range during the day time.

ABSTRACT

An Electrical-Energy-Storage Unit (EESU) has as a basis material a high-permittivity, composition-modified barium titanate ceramic powder. This powder is double coated with the first coating being aluminium oxide and the second coating calcium magnesium aluminosilicate glass. The components of the EESU are manufactured with the use of classical ceramic fabrication techniques which include screen printing alternating multi-layers of nickel electrodes and high-permittivity composition-modified barium titanate powder, sintering to a closed-pore porous body, followed by hot-isostatic pressing to a void-free body. The components are configured into a multi-layer array with the use of a solder-bump technique as the enabling technology so as to provide a parallel configuration of components that has the capability to store electrical energy in the range of 52 kWH. The total weight of an EESU with this range of electrical energy storage is about 336 pounds.

BACKGROUND OF THE INVENTION

1. Field of the Invention

This invention relates generally to energy-storage devices, and relates more particularly to high-permittivity ceramic components utilised in an array configuration for application in ultra high electrical-energy storage devices.

2. Description of the Relevant Art

The internal-combustion-engine (ICE) powered vehicles have as their electrical energy sources a generator and battery system. This electrical system powers the vehicle accessories, which include the radio, lights, heating, and air conditioning. The generator is driven by a belt and pulley system and some of its power is also used to recharge the battery when the ICE is in operation. The battery initially provides the required electrical power to operate an electrical motor that is used to turn the ICE during the starting operation and the ignition system.

The most common batteries in use today are:
Flooded lead-acid,
Sealed gel lead-acid,
Nickel-Cadmium (Ni-Cad),
Nickel Metal Hydride (NiMH), and
Nickel-Zinc (Ni-Z).

References on the subject of electrolchemical batteries include the following:
Guardian, Inc., "Product Specification": Feb. 2, 2001;
K. A. Nishimura, "NiCd Battery", Science Electronics FAQ V1.00: Nov. 20, 1996;
Ovonics, Inc., "Product Data Sheet": no date;
Evercel, Inc., "Battery Data Sheet—Model 100": no date;
S. R. Ovshinsky et al., "Ovonics NiMH Batteries: The Enabling Technology for Heavy-Duty Electrical and Hybrid Electric Vehicles", Ovonics publication 2000-01-3108: Nov. 5, 1999;
B. Dickinson et al., "Issues and Benefits with Fast Charging Industrial Batteries", AeroVeronment, Inc. article: no date.

Each specific type of battery has characteristics, which make it either more or less desirable to use in a specific application. Cost is always a major factor and the NiMH battery tops the list in price with the flooded lead-acid battery being the most inexpensive. Evercel manufactures the Ni-Z battery and by a patented process, with the claim to have the highest power-per-pound ratio of any battery. See Table 1 below for comparisons among the various batteries. What is lost in the cost translation is the fact that NiMH batteries yield nearly twice the performance (energy density per weight of the battery) than do conventional lead-acid batteries. A major drawback to the NiMH battery is the very high self-discharge rate of approximately 5% to 10% per day. This would make the battery useless in a few weeks. The Ni-Cad battery and the lead-acid battery also have self-discharge but it is in the range of about 1% per day and both contain hazardous materials such as acid or highly toxic cadmium. The Ni-Z and the NiMH batteries contain potassium hydroxide and this electrolyte in moderate and high concentrations is very caustic and will cause severe burns to tissue and corrosion to many metals such as beryllium, magnesium, aluminium, zinc, and tin.

Another factor that must be considered when making a battery comparison is the recharge time. Lead-acid batteries require a very long recharge period, as long as 6 to 8 hours. Lead-acid batteries, because of their chemical makeup, cannot sustain high current or voltage continuously during charging. The lead plates within the battery heat rapidly and cool very slowly. Too much heat results in a condition known as "gassing" where hydrogen and oxygen gases are released from the battery's vent cap. Over time, gassing reduces the effectiveness of the battery and also increases the need for battery maintenance, i.e., requiring periodic de-ionised or distilled water addition. Batteries such as Ni-Cad and NiMH are not as susceptible to heat and can be recharged in less time, allowing for high current or voltage changes which can bring the battery from a 20% state of charge to an 80% state of charge in just 20 minutes. The time to fully recharge these batteries can be more than an hour. Common to all present day batteries is a finite life, and if they are fully discharged and recharged on a regular basis their life is reduced considerably.

SUMMARY OF THE INVENTION

In accordance with the illustrated preferred embodiment, the present invention provides a unique electrical-energy-storage unit that has the capability to store ultra high amounts of energy.

One aspect of the present invention is that the materials used to produce the energy-storage unit, EESU, are not explosive, corrosive, or hazardous. The basis material, a high-permittivity calcined composition-modified barium titanate powder is an inert powder and is described in the following references: S. A. Bruno, D. K. Swanson, and I. Burn, J. Am Ceram. Soc. 76, 1233 (1993); P. Hansen, U.S. Pat. No. 6,078,494, issued Jun. 20, 2000. The most cost-effective metal that can be used for the conduction paths is nickel. Nickel as a metal is not hazardous and only becomes a problem if it is in solution such as in deposition of electroless nickel. None of the EESU materials will explode when being recharged or impacted. Thus the EESU is a safe product when used in electric vehicles, buses, bicycles, tractors, or any device that is used for transportation or to perform work. It could also be used for storing electrical power generated from solar voltaic cells or other alternative sources for residential, commercial, or industrial applications. The EESU will also allow power averaging of power plants utilising SPVC or wind technology and will have the capability to provide this function by storing sufficient electrical energy so that when the sun is not shinning or the wind is not blowing they can meet the energy requirements of residential, commercial, and industrial sites.

Another aspect of the present invention is that the EESU initial specifications will not degrade due to being fully discharged or recharged. Deep cycling the EESU through the life of any commercial product that may use it will not cause the EESU specifications to be degraded. The EESU can also be rapidly charged without damaging the material or reducing its life. The cycle time to fully charge a 52 kWH EESU would be in the range of 4 to 6 minutes with sufficient cooling of the power cables and connections. This and the ability of a bank of EESUs to store sufficient energy to supply 400 electric vehicles or more with a single charge will allow electrical energy stations that have the same features as the present day gasoline stations for the ICE cars. The bank of EESUs will store the energy being delivered to it from the present day utility power grid during the night when demand is low and then deliver the energy when the demand hits a peak. The EESU energy bank will be charging during the peak times but at a rate that is sufficient to provide a full charge of the bank over a 24-hour period or less. This method of electrical power averaging would reduce the number of power generating stations required and the charging energy could also come from alternative sources. These electrical-energy-delivery stations will not have the hazards of the explosive gasoline.

Yet another aspect of the present invention is that the coating of aluminium oxide and calcium magnesium aluminosilicate glass on calcined composition-modified barium titanate powder provides many enhancement features and manufacturing capabilities to the basis material. These coating materials have exceptional high voltage breakdown and when coated on to the above material will increase the breakdown voltage of ceramics comprised of the coated particles from 3×10^6 V/cm of the uncoated basis material to around 5×10^6 V/cm or higher. The following reference indicates the dielectric breakdown strength in V/cm of such materials: J. Kuwata et al., "Electrical Properties of Perovskite-Type Oxide Thin-Films Prepared by RF Sputtering", Jpn. J. Appl. Phys., Part 1, 1985, 24(Suppl. 24-2, Proc. Int. Meet. Ferroelectr., 6th), 413-15. This very high voltage breakdown assists in allowing the ceramic EESU to store a large amount of energy due to the following: Stored energy $E = CV^2 / 2$, Formula 1, as indicated in F. Sears et al., "Capacitance-Properties of Dielectrics", University Physics, Addison-Wesley Publishing Company, Inc.: Dec. 1957: pp 468-486, where C is the capacitance, V is the voltage across the EESU terminals, and E is the stored energy. This indicates that the energy of the EESU increases with the square of the voltage. **Fig.1** indicates that a double array of 2230 energy storage components 9 in a parallel configuration that contain the calcined composition-modified barium titanate powder. Fully densified ceramic components of this powder coated with 100 Angstrom units of aluminium oxide as the first coating 8 and a 100 Angstrom units of calcium magnesium aluminosilicate glass as the second coating 8 can be safely charged to 3500 V. The number of components used in the double array depends on the electrical energy storage requirements of the application. The components used in the array can vary from 2 to 10,000 or more. The total capacitance of this particular array 9 is 31 F which will allow 52,220 W·h of energy to be stored as derived by Formula 1.

These coatings also assist in significantly lowering the leakage and ageing of ceramic components comprised of the calcined composition-modified barium titanate powder to a point where they will not effect the performance of the EESU. In fact, the discharge rate of the ceramic EESU will be lower than 0.1% per 30 days which is approximately an order of magnitude lower than the best electrochemical battery.

A significant advantage of the present invention is that the calcium magnesium aluminosilicate glass coating assists in lowering the sintering and hot-isostatic-pressing temperatures to 800^{O}C. This lower temperature eliminates the need to use expensive platinum, palladium, or palladium-silver alloy as the terminal metal. In fact, this temperature is in a safe range that allows nickel to be used, providing a major cost saving in material expense and also power usage during the hot-isostatic-pressing process. Also, since the glass becomes easily deformable and flowable at these temperatures it will assist in removing the voids from the EESU material during the hot-isostatic-pressing process. The manufacturer of such systems is Flow Autoclave Systems, Inc. For this product to be successful it is mandatory that all voids be removed to assist in ensuring that the high voltage breakdown can be obtained. Also, the method described in this patent of coating the calcium magnesium aluminosilicate glass ensures that the hot-isostatic-pressed double-coated composition-modified barium titanate high-relative-permittivity layer is uniform and homogeneous.

Yet another aspect of the present invention is that each component of the EESU is produced by screen-printing multiple layers of nickel electrodes with screening ink from nickel powder. Interleaved between nickel electrodes are dielectric layers with screening ink from calcined double-coated high-permittivity calcined composition-modified barium titanate powder. A unique independent dual screen-printing and layer-drying system is used for this procedure. Each screening ink contains appropriate plastic resins, surfactants, lubricants, and solvents, resulting in a proper rheology (the study of the deformation and flow of matter) for screen printing. The number of these layers can vary depending on the electrical energy storage requirements. Each layer is dried before the next layer is screen printed. Each nickel electrode layer **12** is alternately preferentially aligned to each of two opposite sides of the component automatically during this process as indicated in **Fig.2**. These layers are screen printed on top of one another in a continuous manner. When the specified number of layers is achieved, the component layers are then baked to obtain by further drying sufficient handling strength of the green plastic body. Then the array is cut into individual components to the specified sizes.

COMPONENT
Side View Cross Section

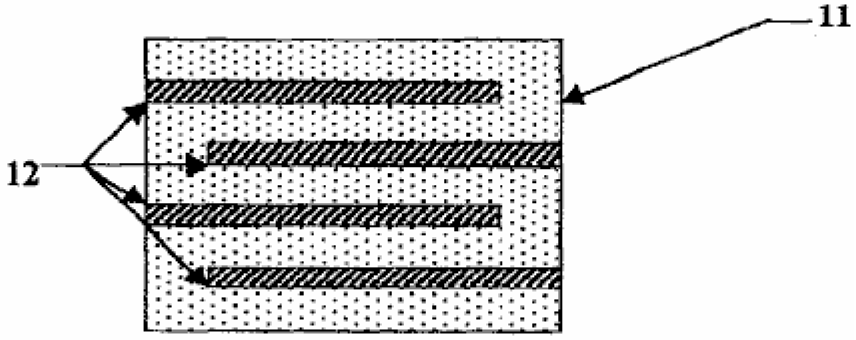

Figure 2

Alternatively, the dielectric powder is prepared by blending with plastic binders, surfactants, lubricants, and solvents to obtain a slurry with the proper rheology for tape casting. In tape casting, the powder-binder mixture is extruded by pressure through a narrow slit of appropriate aperture height for the thickness desired of the green plastic ceramic layer on to a moving plastic-tape carrier, known as a doctor-blade web coater. After drying, to develop sufficient handling strength of the green plastic ceramic layer, this layer is peeled away from the plastic-tape carrier. The green plastic ceramic layer is cut into sheets to fit the screen-printing frame in which the electrode pattern is applied with nickel ink. After drying of the electrode pattern, the sheets are stacked and then pressed together to assure a well-bonded lamination. The laminate is then cut into components of the desired shape and size.

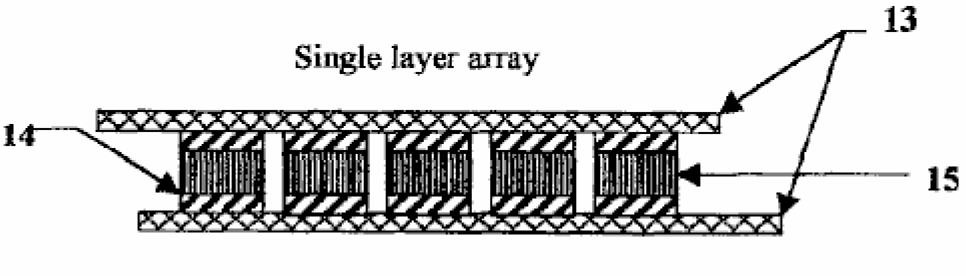

Figure 3

The components are treated for the binder-burnout and sintering steps. The furnace temperature is slowly ramped up to 350^{O}C and held for a specified length of time. This heating is accomplished over a period of several hours so as to avoid any cracking and delamination of the body. Then the temperature is ramped up to 850^{O}C and held for a specified length of time. After this process is completed the components are then properly prepared for the hot isostatic pressing at 700^{O}C and the specified pressure. This process will eliminate voids. After this process, the components are then side-lapped on the connection side to expose the preferentially aligned nickel electrodes **12**. Then these sides are dipped into ink from nickel powder that has been prepared to have the desired rheology. Then side conductors of nickel **14** are dipped into the same ink and then are clamped on to each side of the components **15** that have been dipped into the nickel powder ink. The components are then fired at 800^{O}C for 20 minutes to bond the nickel bars to the components as indicated in **Fig.3**. The components are then assembled into a first-level array, **Fig.3**, with the use of the proper tooling and solder-bump technology. Then the first-level arrays are assembled to form a second-level array, **Fig.4**, by stacking the first array layers on top of one another in a preferential mode. Then nickel bars **18** are attached on each side of the second array as indicated in **Fig.4**. Then the EESU is packaged to form its final assembly configuration.

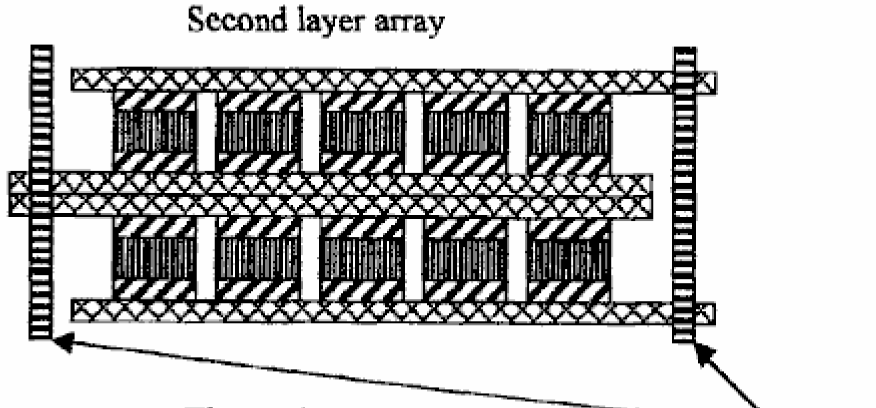

Figure 4

The features of this patent indicate that the ceramic EESU, as indicated in Table 1, outperforms the electrochemical battery in every parameter. This technology will provide mission-critical capability to many sections of the energy-storage industry.

TABLE 1

The parameters of each technology to store 52.2 kW · h of electrical energy
are indicated-(data as of February 2001 from manufacturer's specification sheets).

	NiMH	LA(Gel)	Ceramic EESU	Ni—Z
Weight (pounds)	1,716	3,646	336	1,920
Volume (cu. inch)	17,881	43,045	2,005	34,780
Discharge rate	5% in 30 days	1% in 30 days	0.1% in 30 days	1% in 30 days
Charging time (full)	1.5 hours	8.0 hours	3 to 6 minutes	1.5 hours
Life reduced with deep cycle use	moderate	high	none	moderate
Hazardous materials	Yes	Yes	None	Yes

This EESU will have the potential to revolutionise the electric vehicle (EV) industry, the storage and use of electrical energy generated from alternative sources with the present utility grid system as a backup source for residential, commercial, and industrial sites, and the electric energy point of sales to EVs. The EESU will replace the electrochemical battery in any of the applications that are associated with the above business areas or in any business area where its features are required.

The features and advantages described in the specifications are not all inclusive, and particularly, many additional features and advantages will be apparent to one of ordinary skill in the art in view of the description, specification and claims made here. Moreover, it should be noted that the language used in the specification has been principally selected for readability and instructional purposes, and may not have been selected to delineate or circumscribe the inventive subject matter, resort to the claims being necessary to determine such inventive subject matter.

BRIEF DESCRIPTION OF THE DRAWINGS

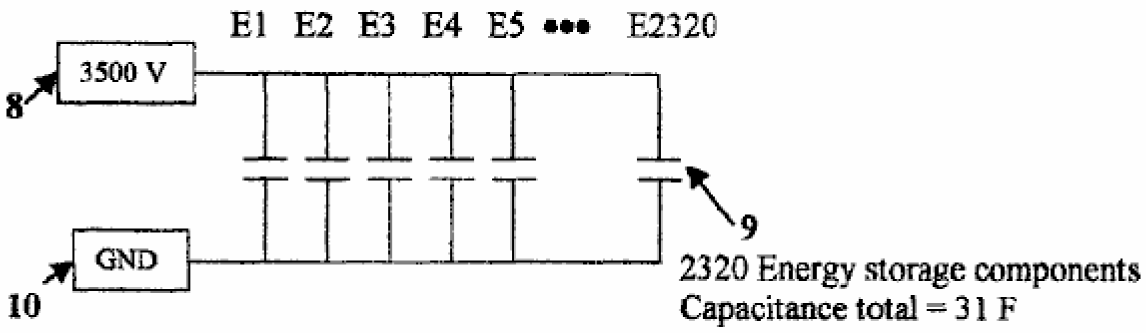

Figure 1

Fig.1 indicates a schematic of 2320 energy storage components **9** hooked up in parallel with a total capacitance of 31 Farads. The maximum charge voltage **8** of 3500 V is indicated with the cathode end of the energy storage components **9** hooked to system ground **10**.

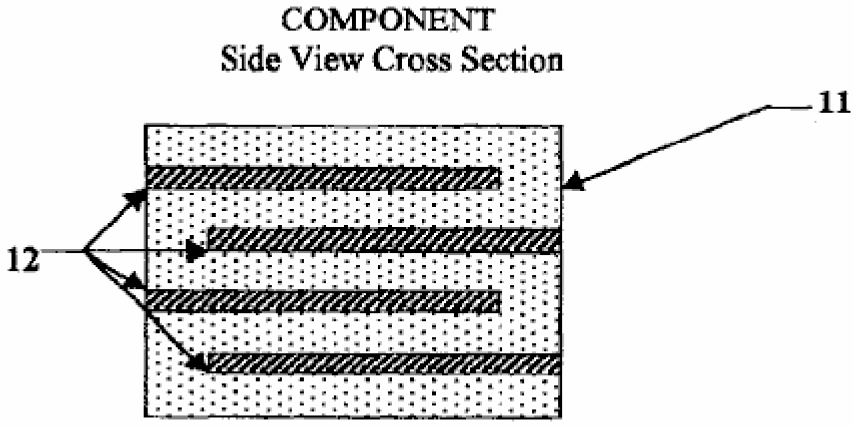

Figure 2

Fig.2 is a cross-section side view of the electrical-energy-storage unit component. This figure indicates the alternating layers of nickel electrode layers **12** and high-permittivity composition-modified barium titanate dielectric layers **11**. This figure also indicate the preferentially aligning concept of the nickel electrode layers **12** so that each storage layer can be hooked up in parallel.

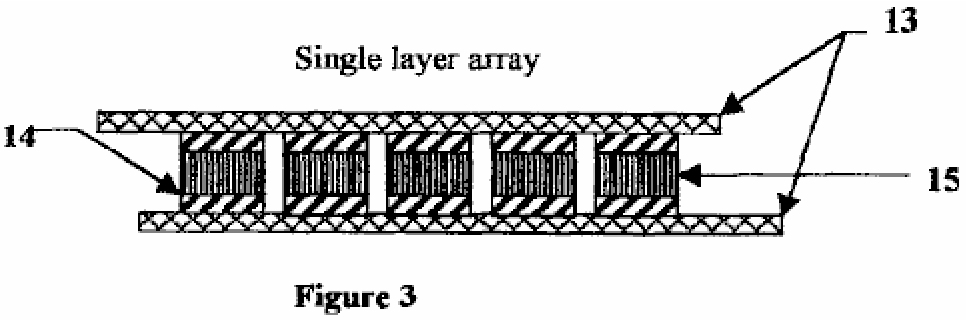

Figure 3

Fig.3 is side view of a single-layer array indicating the attachment of individual components **15** with the nickel side bars **14** attached to two preferentially aligned copper conducting sheets **13**.

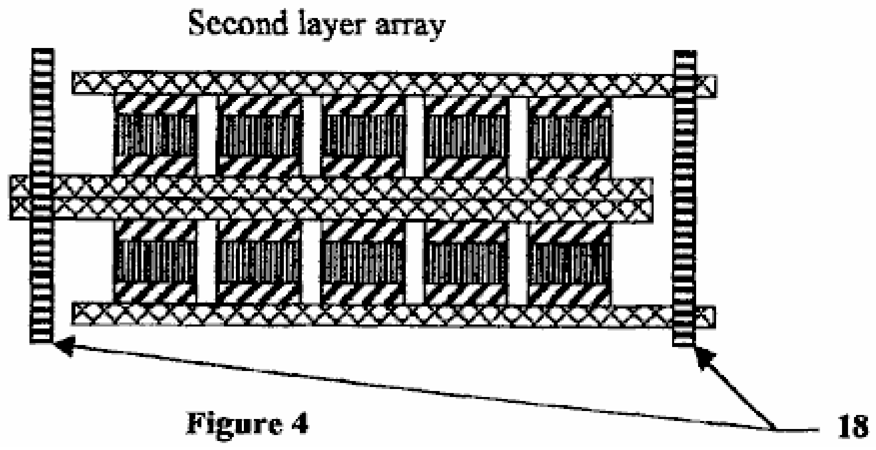

Figure 4

Fig.4 is a side view of a double-layer array with copper array connecting nickel bars **16** attaching the two arrays via the edges of the preferentially aligned copper conductor sheets **13**. This figure indicates the method of attaching the components in a multi-layer array to provide the required energy storage.

Reference No.	Refers to this in the drawings
8	System maximum voltage of 3500 V
9	2320 energy-storage components hooked up in parallel with a total capacitance of 31 Farad
10	System ground
11	High-permittivity calcined composition-modified barium titanate dielectric layers
12	Preferentially aligned nickel electrode layers
13	Copper conductor sheets
14	Nickel sidebars
15	Components
16	Copper array connecting nickel bars

DETAILED DESCRIPTION OF THE PREFERRED EMBODIMENTS

Fig.1, **Fig.2**, **Fig.3**, and **Fig.4** of the drawings and the following description depict various preferred embodiments of the present invention for purposes of illustration only. One skilled in the art will readily recognise from the following discussion those alternative embodiments of the structures and methods illustrated herein may be employed without departing from the principles of the invention described here. While the invention will be described in conjunction with the preferred embodiments, it will be understood that they are not intended to limit the invention to those embodiments. On the contrary, the invention is intended to cover alternatives, modifications, and equivalents, which may be included within the spirit and scope of the invention as defined by the claims.

Preparation of the high-permittivity calcined composition-modified barium titanate powder that is used to fabricate the EESU is explained as follows. Wet-chemical-prepared powders of high-purity as well as composition-modified barium titanate with narrow particle-size distribution have been produced with clear advantages over those prepared by solid-state reaction of mechanically mixed, ball-milled, and calcined powdered ingredients. The compositional and particle-size uniformity attained with a coprecipitated-prepared powder is vastly superior to that with a conventional-prepared powder. The microstructures of ceramics formed from these calcined wet-chemical-prepared powders are uniform in grain size and can also result in smaller grain size. Electrical properties are improved so that higher relative permittivities and increased dielectric breakdown strengths can be obtained. Further improvement can be obtained by the elimination of voids within the sintered ceramic body with subsequent hot isostatic pressing.

High-relative-permittivity dielectrics have inherent problems, namely ageing, fatigue, degradation, and decay of the electrical properties, which limit their application. The use of surface-coated powders in which the surface region is comprised of one or two materials different in composition from that of the powder overcomes these problems provided that the compositions are appropriately chosen.

Among ceramics, alumina [aluminium oxide (Al_2O_3)], and among glasses, calcium magnesium aluminosilicate ($CaO.MgO.Al_2O_3.SiO_2$) glasses are the best dielectrics in terms of having the highest dielectric breakdown strengths and to seal the high-relative-permittivity dielectric powder particles so as to eliminate or significantly reduce their inherent problems.

A glass with a given composition at temperatures below its glass transition temperature range, which is in the neighbourhood of its strain-point temperature, is in a fully rigid condition, but at temperatures above this range is in a viscous-flow condition, its viscosity decreasing with increasing temperature. The application of hot isostatic pressing to a sintered closed-pore porous ceramic body comprised of sufficient-thickness glass-coated powder will lead to void elimination provided the glass is in the viscous-flow condition where it is easily deformable and flowable.

The wet-chemical-prepared and calcined composition-modified barium titanate powder is accordingly coated with these layers of, first, alumina, and second, a calcium magnesium aluminosilicate glass. After the first layer has been applied by wet-chemical means, the powder is calcined at $1050^{O}C$ to convert the precursor, aluminium nitrate nonahydrate [$Al(NO_3)_3.9H_2O$] to aluminium oxide (corundum) [α-Al_2O_3]. Then the second layer is applied by wet-chemical means with the use of the precursors in the appropriate amounts of each, and in absolute ethanol (CH_3CH_2OH) as the solvent, shown in the accompanying table. After drying, the powder is calcined at $500^{O}C$ to convert the precursor mixture to a calcium magnesium aluminosilicate glass. It is important that the calcining temperature is not higher than the strain point of the selected glass composition to prevent sticking together of the powder. The glass coating has the further advantage of acting as a sintering aid and allowing a substantially lower firing temperature for densification of the ceramic body particularly during the hot-isostatic-pressing step.

Another significant advantage of the calcium magnesium aluminosilicate glass coating is that sintering and densification temperatures are sufficiently lowered to allow the use of nickel conductor electrodes in place of the conventional expensive platinum, palladium, or palladium-silver alloy ones.

Preparation of the Calcined Composition-Modified Barium Titanate Powder is Indicated by the Following Process Steps.

A solution of the precursors: $Ba(NO_3)_2$, $Ca(NO_3)_2.4H_2O$, $Nd(NO_3)_3.6H_2O$, $Y(NO_3)_3.4H_2O$, $Mn(CH_3COO)_2.4H_2O$, $ZrO(NO_3)_2$, and $[CH_3CH(O—)COONH_4]2Ti(OH)_2$, as selected from the reference; Sigma-Aldrich, Corp., "Handbook of Fine Chemicals and Laboratory Equipment", 2000-2001, in de-ionised water heated to $80^{O}C$ is made in the proportionate amount in weight percent for each of the seven precursors as shown in the most right-hand column of Table 3. A separate solution of $(CH_3)4NOH$ somewhat in excess amount than required, as shown in Table 4, is made in de-ionised water, free of dissolved carbon dioxide (CO_2) and heated to 80^{O}-$85^{O}C$. The two solutions are mixed by pumping the heated ingredient streams simultaneously through a coaxial fluid jet mixer. A slurry of the co-precipitated powder is produced and collected in a drown-out vessel. The co-precipitated powder is refluxed in the drown-out vessel at 90°-95° C. for 12 hr and then filtered, de-ionised-water washed, and dried. Alternatively, the powder may be collected by centrifugal sedimentation. An advantage of $(CH_3)4NOH$ as the strong base reactant is that there are no metal element ion residuals to wash away anyway. Any residual $(CH_3)4NOH$, like any residual anions from the precursors, is harmless, because removal by volatilisation and decomposition occurs during the calcining step. The powder contained in a silica glass tray or tube is calcined at $1050^{O}C$ in air. Alternatively, an alumina ceramic tray can be used as the container for the powder during calcining.

TABLE 2

Composition-modified barium titanate with metal element atom fractions given for an optimum result, as demonstrated in the reference: P. Hansen, U.S. Pat. No. 6,078,494, issued Jan. 20, 2000.

Composition-modified barium titanate with
metal element atom fractions as follows:

Metal Element	Atom Fraction	Atomic Weight	Product	Weight %
Ba	0.9575	137.327	131.49060	98.52855
Ca	0.0400	40.078	1.60312	1.20125
Nd	0.0025	144.240	0.36060	0.27020
Total:	**1.0000**			**100.00000**
Ti	0.8150	47.867	39.01161	69.92390
Zr	0.1800	91.224	16.42032	29.43157
Mn	0.0025	54.93085	0.13733	0.24614
Y	0.0025	88.90585	0.22226	0.39839
Total:	**1.0000**			**100.00000**

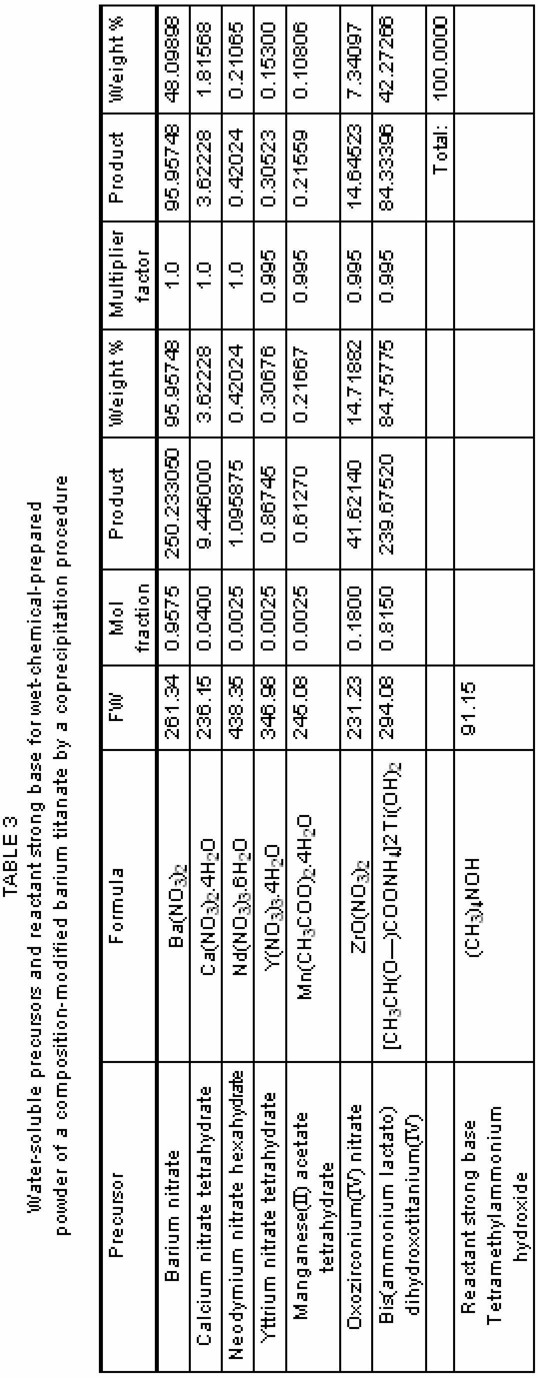

TABLE 3
Water-soluble precursors and reactant strong base for wet-chemical-prepared
powder of a composition-modified barium titanate by a coprecipitation procedure

Precursor	Formula	FW	Mol fraction	Product	Weight %	Multiplier factor	Product	Weight %
Barium nitrate	$Ba(NO_3)_2$	261.34	0.9575	250.233050	95.95748	1.0	95.95748	48.09898
Calcium nitrate tetrahydrate	$Ca(NO_3)_2.4H_2O$	236.15	0.0400	9.446000	3.62228	1.0	3.62228	1.81568
Neodymium nitrate hexahydrate	$Nd(NO_3)_3.6H_2O$	438.35	0.0025	1.095875	0.42024	1.0	0.42024	0.21065
Yttrium nitrate tetrahydrate	$Y(NO_3)_3.4H_2O$	346.98	0.0025	0.86745	0.30676	0.995	0.30523	0.15300
Manganese(II) acetate tetrahydrate	$Mn(CH_3COO)_2.4H_2O$	245.08	0.0025	0.61270	0.21667	0.995	0.21559	0.10806
Oxozirconium(IV) nitrate	$ZrO(NO_3)_2$	231.23	0.1800	41.62140	14.71882	0.995	14.64523	7.34097
Bis(ammonium lactato) dihydroxotitanium(IV)	$[CH_3CH(O—)COONH_4]2Ti(OH)_2$	294.08	0.8150	239.67520	84.75775	0.995	84.33396	42.27266
							Total:	100.0000
Reactant strong base Tetramethylammonium hydroxide	$(CH_3)_4NOH$	91.15						

TABLE 4

Calculation of minimum amount of $(CH_3)_4NOH$ required for 100 g of the precursor mixture

Precursor	FW	Wt %	Wt %/FW	Reactant base multiplier	Mol of base required
$Ba(NO_3)_2$	261.34	48.09898	0.184048	2	0.368095
$Ca(NO_3)_2.4H_2O$	236.15	1.81568	0.007689	2	0.015377
$Nd(NO_3)_3.6H_2O$	438.35	0.21065	0.000481	3	0.001442
$Y(NO_3)_3.4H_2O$	346.98	0.15300	0.000441	3	0.001323
$Mn(CH_3COO)_2.4H_2O$	245.08	0.10806	0.000441	2	0.000882
$ZrO(NO_3)_2$	231.23	7.34097	0.031747	2	0.063495
$[CH_3CH(O—)COONH_4]_2Ti\ (OH)_2$	294.08	42.27266	0.143745	2	0.287491
	Total:	100.00000			0.738105
Reactant strong base					
$(CH_3)_4NOH$	91.15				

Note: The weight of (CH3)4NOH required is accordingly a minimum of
(0.738105 mol) (91.15 g/mol) = 67.278 g for 100 g of the precursor mixture.
Tetramethylammonium hydroxide (CH3)4NOH is a strong base.

Coating of Aluminium Oxide on Calcined Modified Barium Titanate Powder

Barium titanate $BaTiO_3$	FW 233.19	d 6.080 g/cm3
Aluminium oxide Al_2O_3	FW 101.96	d 3.980 g/cm3

Precursor, aluminium nitrate nonahydrate, as selected from the reference: Sigma-Aldrich Corp., "Handbook of Fine Chemicals and Laboratory Equipment", 2000-2001. $Al(NO_3)_3.9H_2O$ FW 3.75.13

For Calcined Aluminium Oxide (Al_2O_3) Coating of 100 Angstrom units Thickness on Calcined Modified Barium Titanate Powder 100 Angstrom units = 10-6 cm 1.0 m^2 = 104 cm^2

area thickness of Al_2O_3 coating volume $(10^4\ cm^2/g)(10^{-6}\ cm) = 10^{-2}\ cm^3/g$ - - - of calcined powder

$$\frac{(10^{-2}\ \text{cm}^3\ \text{volume Al}_2\text{O}_3\ \text{coating})\times(3.98\ \text{g/cm}^3\ \text{density of Al}_2\text{O}_3)}{\text{g of calcined powder}} = \frac{39.8\ \times 10^{-3}\ \text{g of Al}_2\text{O}_3\ \text{coating}}{\text{g of calcined powder}}\ \text{or}$$

$$= \frac{39.8\ \text{mg of Al}_2\text{O}_3\ \text{coating}}{\text{g of calcined powder}}$$

$Al(NO_3)_3.9H_2O$ (FW 375.13)(2)=750.26

Al_2O_3 FW 101.96=101.96

750.26/101.96=7.358

$$\frac{(7.358)(39.8\ \text{mg of Al}_2\text{O}_3\ \text{coating})}{\text{g of calcined powder}} = \frac{292.848\ \text{mg of Al(NO}_3)_3\cdot 9\text{H}_2\text{O}}{\text{g of calcined powder}}$$

For an aluminium oxide (Al_2O_3) coating of 100 Angstrom units thickness on calcined modified barium titanate powder with particle volume of 1.0 μm^3, 39.8 mg of Al_2O_3 are required per g of this powder, corresponding to 292.848 mg of the aluminium nitrate nonahydrate [$Al(NO_3)_3.9H_2O$] precursor required per g of this powder.

Coating of Calcium Magnesium Aluminosilicate Glass on Aluminium Oxide Coated Calcined Modified Barium Titanate Powder

	FW g/mol	d g/cm^3
Barium titanate $BaTiO_3$	233.19	6.080

Calcium magnesium aluminosilicate (CaO.MgO.Al2O3.SiO2) glass precursors, as selected from the reference: Sigma-Aldrich, Corp., "Handbook of Fine Chemicals and Laboratory Equipment", 2000-2001.

Calcium methoxide (CH$_3$O)2Ca	101.15
Calcium isopropoxide $[(CH_3)_2CHO]_2Ca$	158.25
Magnesium methoxide $(CH_3O)_2Mg$	86.37
Magnesium ethoxide $(CH_3CH_2O)_2Mg$	114.43
Aluminium ethoxide $(CH_3CH_2O)_3Al$	162.16
Aluminium isopropoxide $[(CH_3)_2CHO]_3Al$	204.25
Aluminium butoxide $[CH_3(CH_2)_3O]_3Al$	246.33
Tetraethyl orthosilicate $Si(OCH_2CH_3)_4$	208.33

Select glass composition, e.g.,

$CaO.MgO.2Al_2O_3.8SiO_2$ and accordingly the precursors:

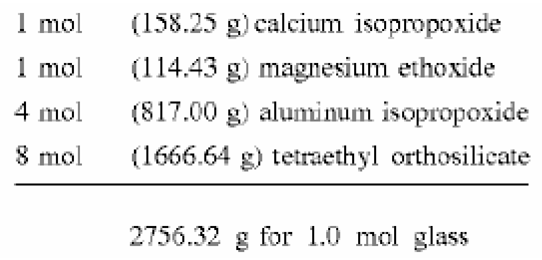

1 mol	(158.25 g) calcium isopropoxide
1 mol	(114.43 g) magnesium ethoxide
4 mol	(817.00 g) aluminum isopropoxide
8 mol	(1666.64 g) tetraethyl orthosilicate
	2756.32 g for 1.0 mol glass

Prepare Mixture of these Precursors in Absolute Ethanol (to Avoid Hydrolysis) and in Dry-Air Environment (Dry Box) (also to Avoid Hydrolysis).

Glass Composition: $CaO.MgO.2Al_2O_3.8SiO_2$ or $CaMgAl_4Si_8O_{24}$

1 mol (56.08 g)	CaO
1 mol (40.30 g)	MgO
2 mol (101.96 g × 2 = 203.92 g)	Al_2O_3
8 mol (60.08 g × 8 = 480.64 g)	SiO_2

glass FW total 780.98 g/mol
Density of glass: about 2.50 g/cm^3

Calcined modified barium titanate powder
Particle volume: 1.0 μm^3 or $1.0(10^{-4}\ cm)^3 = 10^{-12}\ cm^3$;
so there are 10^{12} particles/cm^3 (assumption of no voids)
Particle area: 6 μm^2 or $(6)(10^{-4}\ cm)^2 = 6\times10^{-8}\ cm^3$;
Particle area/cm3 (no voids):
$(6\times10^{-8}\ cm^2/particle)(10^{12}\ particles/cm^3) = 6\times10^4\ cm^2/cm^3$ or 6 m^2/cm^3.

Then for density of 6 g/cm^3, the result is:

$$\frac{6\ m^2/cm^3}{6\ g/cm^3} = 1.0\ m^2/g$$

For Calcined Glass Coating of 100 Angstrom units Thickness on Calcined Powder:

100 Angstrom units = 10^{-6} cm 1.0 m^2 = 10^4 cm^2

(10^4 cm^2/g)(10^{-6} cm) = 10^{-2} cm^3/g of calcined powder of glass coating and then

$$\frac{(10^{-2}\ \text{cm}^3\ \text{of glass coating})}{\text{g of calcined powder}} \times \left(2.50\ \text{g/cm}^3\ \text{density of glass}\right) =$$

$$\frac{25.0\times 10^{-3}\ \text{g of glass coating}}{\text{g of calcined powder}} \quad \text{or} \quad \frac{25.0\ \text{mg of glass coating}}{\text{g of calcined powder}}$$

Precursor mixture FW 2756.32 = 3.529
Glass FW 780.98

$$\frac{(3.529)(25.0\ \text{mg of glass coating})}{(\text{g of calcined powder})} = 88.228\ \text{mg of precursor mixture}$$

For a $CaMgAl_4Si_8O_{24}$ glass coating of 100 Angstrom units thickness on calcined modified barium titanate powder with particle volume of 1.0 μm3, 25.0 mg of this glass are required per g of this powder, corresponding to 88.228 mg of the precursor mixture required per g of this powder.

Particle Volume and Area

V particle = a^3 for cube
If a = 1.0 μm, V = 1.0 μm^3
A particle = $6a^2$ for cube
If a = 1.0 μm, A = 6 μm^2

Particle coating volume

(6 a^2)(t), if t = 100 Angstrom units = 10×10^3 μm, and 6 a^2=6.0 μm^2,
then (6.082 m^2)(10×10^{-3} μm) = 60×10^{-3} μm^3 = V coating

Ratio of particle coating volume to particle volume 60×10^{-3} μm^3/1.0 μm^3 = 60×10^{-3} = 0.06 or 6%

With the assumption of no voids and absolutely smooth surface, for an ideal cubic particle with volume of 1.0 μm3 and for a particle coating of 100 Angstrom units thickness, the coating volume is 60×10^{-3} μm3 or 6.0% that of the particle volume.

Calculations of the Electrical-Energy-Storage Unit's Weight, Stored Energy, Volume, and Configuration.

Assumptions:

The relative permittivity of the high-permittivity powder is nominally 33,500, as given in the reference: P. Hansen, U.S. Pat. No. 6,078,494, issued Jan. 20, 2000.

* The 100 ? coating of Al2O3 and 100 ? of calcium magnesium aluminosilicate glass will reduce the relative permittivity by 12%.
* K = 29,480
  Energy stored by a capacitor: E = $CV^2/(2\times 3600\ s/h)$ = W·h
* C = capacitance in farads
* V = voltage across the terminals of the capacitor
  It is estimated that is takes 14 hp, 746 watts per hp, to power an electric vehicle running at 60 mph with the lights, radio, and air conditioning on. The energy-storage unit must supply 52,220 W·h or 10,444 W for 5 hours to sustain this speed and energy usage and during this period the EV will have travelled 300 miles.
  Each energy-storage component has 1000 layers.

  C = $\varepsilon_o KA/t$

***** ε_0 = permittivity of free space
***** K = relative permittivity of the material
***** A = area of the energy-storage component layers
***** t = thickness of the energy-storage component layers

Voltage breakdown of the energy-storage components material after coating with Al_2O_3 and calcium magnesium aluminosilicate glass will be in the range of 1.0×10^6 V/cm to 5×10^6 V/cm or higher. Using the proper voltage breakdown selected from this range could allow the voltage of the energy-storage unit to be 3500 V or higher.
One hp = 746 W

EXAMPLE

Capacitance of one layer = 8.854×10^{-12} F / m × $2.948 \times 10^4 \times 6.45 \times 10^{-4} m^2 / 12.7 \times 10^{-6}$ m

C = 0.000013235 F

With 1000 layers:

C = 0.013235 F

The required energy storage is
E_t = 14 hp × 746 W /hp × 5 h = 52,220 W·h

The total required capacitance of the energy-storage unit:
CT = E_t × 2 × 3600 s/h / V^2 = 52,220 W·h × 2 × 3600 s/h/$(3500\ V)^2$ C_T = 31 F

Number of capacitance components required:
N_c = 31 F / 0.013235 F = 2320

Volume and weight of energy-storage unit:

Volume of the dielectric material:

Volume = area x thickness x number of layers
= 6.45 cm^2 x 12.72×10^{-4} cm x 1000
= 8.2 cm^3

Total volume = 8.2 cm^3 × number of components (2320) = 19,024 cm^3
Density of the dielectric material = 6.5 g/cm^3
Weight of each component = density × volume = 53.3 g
Total weight of the dielectric material = 53.3 g × 2320 / 454 g per pound = 272 pounds

Volume of the nickel conductor layers:
Thickness of the nickel layer is 1×10-6 m
Volume of each layer = 6.45 cm2×1.0×10-4 cm × 1000 = 0.645 cm3
Density of nickel = 8.902 g/cm3
Weight of nickel layers for each component = 5.742 g
Total weight of nickel = 34 pounds

Total number of capacitance layers and volume of the EESU:
Area required for each component to solder bump = 1.1 $inch^2$
A 12 × 12 array will allow 144 components for each layer of the first array
19 layers of the second array will provide 2736 components which are more than enough to meet the required 2320 components. The distance between the components will be adjusted so that 2320 components will be in each EESU. The second array area will remain the same.
The total weight of the EESU (est.) = 336 pounds
The total volume of the EESU (est.) = 13.5 inches × 13.5 inches × 11 inches = 2005 $inches^3$ which includes the weight of the container and connecting material.
The total stored energy of the EESU = 52,220 W·h

From the above description, it will be apparent that the invention disclosed herein provides a novel and advantageous electrical-energy-storage unit composed of unique materials and processes. The foregoing discussion discloses and describes merely exemplary methods and embodiments of the present invention. As will be understood by those familiar with the art, the invention may be embodied in other specific forms and utilise other materials without departing from the spirit or essential characteristics thereof. Accordingly, the disclosure of the present invention is intended to be illustrative, but not limiting, of the scope of the invention, which is set forth in the following claims.

CLAIMS

1. A method for making an electrical-energy-storage unit comprising components fabricated by the method steps as follow;

a) preparing a wet-chemical-prepared calcined composition-modified barium titanate powder derived from a solution of precursors: $Ba(NO_3)_2$, $Ca(NO_3)_2.4H_2O$, $Nd(NO_3)_3.6H_2O$, $Y(NO_3)_3.4H_2O$, $Mn(CH_3COO)_2.4H_2O$, $ZrO(N_3O)_2$, and $[CH_3CH(O—)COONH_4]_2Ti(OH)_2$ in de-ionised water heated to 80^OC, and a separate solution of $(CH_3)_4NOH$ made in de-ionised water and heated to 80^O-85^OC, then mixing the solutions by pumping the heated ingredient streams simultaneously through a coaxial fluid mixer producing co-precipitated powder, then collecting the co-precipitated powder in a drown-out vessel and refluxing at a temperature of 90^O-95^OC for 12 hours, then filtering, washing with de-ionised water, drying, and then calcining 1050^OC in air;

b) fabricating an aluminium oxide (Al_2O_3) coating of 100 Angstrom units thickness on to the wet-chemical-prepared calcined composition-modified barium titanate powder, with the use of aluminium nitrate nonahydrate precursor applied by wet chemical means, then calcining at 1050^OC, resulting in a single-coated calcined composition-modified barium titanate powder;

c) fabricating on to the alumina-coated composition-modified barium titanate powder, a second uniform coating of 100 Angstrom units of calcium magnesium aluminosilicate glass derived from alcohol-soluble precursors: calcium methoxide or calcium isopropoxide, magnesium methoxide or magnesium ethoxide, aluminium ethoxide or aluminium isopropoxide or aluminium isopropoxide, and tetraethyl orthosilicate are applied by wet chemical means which upon calcining at 500^OC results in a double-coated composition-modified barium titanate powder;

d) blending, this double-coated composition-modified barium titanate powder with a screen-printing ink containing appropriate plastic resins surfactants, lubricants, and solvents to provide a suitable rheology for screen printing;

e) screen-printing into interleaved multi-layers of alternating offset nickel electrode layers **12** and double-coated calcined composition-modified barium titanate high-relative-permittivity layers **11** with the use of screening inks having the proper rheology for each of the layers;

f) drying and cutting the screen-punted multi-layer components **15** into a specified rectangular area;

g) sintering the screen-printed multi-layer components **15**, first at a temperature of 350^OC for a specified length of time, then at 850^OC for a specified length of time, to form closed-pore porous ceramic bodies; and

h) hot isostatically pressing the closed-pore porous ceramic bodies, at a temperature of 700^OC with a specified pressure, into a void-free condition;

i) grinding and each side of the component to expose the alternating offset interleaved nickel electrodes **12**;

j) connecting nickel side bars **14** to each side of the components **15**, that have the interleaved and alternating offset nickel electrodes **12** exposed, by applying nickel ink with the proper rheology to each side and clamping the combinations together;

k) heating the components and side nickel bar combination **14-15** 800^OC, and time duration of 20 minutes to bond them together;

l) wave soldering each side of the conducting bars;

m) assembling the components **15** with the connected nickel side bars **14** into the first array, utilising unique tooling and solder-bump technology;

n) assembling the first arrays into the second array;

o) assembling the second arrays into the EESU final assembly.

2. The method of claim 1 wherein a second coating of glass is provided on to the double-coated composition-modified barium titanate powder being in contact with the nickel electrodes and having an applied working voltage of 3500 V across the parallel electrodes.

3. The method of claim 1 wherein a dielectric voltage breakdown strength of 5.0×10^6 V/cm was achieved across the electrodes of the components.

4. The method of claim 1 wherein the method provides an ease of manufacturing due to the softening temperature of the calcium magnesium aluminosilicate glass allowing the relatively low hot-isostatic-pressing temperatures of 700^OC which in turn provides a void-free ceramic body.

5. The method of claim 1 wherein the method provides an ease of fabrication due to the softening temperature of the calcium magnesium aluminosilicate glass allowing the relatively low hot-isostatic-pressing temperatures of 700^OC which in turn allows the use of nickel for the conduction-path electrodes rather than expensive platinum, palladium, or palladium-silver alloy.

6. The method of claim 1 wherein the method provides an ease of fabrication due to the softening temperature of the calcium magnesium aluminosilicate lass allowing the relatively low hot-isostatic-pressing temperatures of 700^OC, which feature along with the coating method provided a uniform-thickness shell of the calcium magnesium aluminosilicate glass and in turn provides hot-isostatic-pressed double-coated composition-modified barium titanate high-relative-permittivity layers that are uniform and homogeneous in microstructure.

7. The method of claim 1 wherein the method provides the double coating of the basis particles of the composition-modified barium titanate powder thereby reducing the leakage and ageing of this material by an order of magnitude of the specification of this basis material, thus reducing the discharge rate to 0.1% per 30 days.

8. The method of claim 1 wherein the method provides a double coating of the composition-modified barium titanate powder, the hot-isostatic-pressing process, the high-density solder-bump packaging, and along with the double-layered array configuration stored 52,220 W·h of electrical energy in a 2005 inches^3 container.

9. The method of claim 1 wherein the method provides materials used: water-soluble precursors of barium (Ba), calcium (Ca), titanium (Ti), zirconium (Zr), manganese (Mn), yttrium (Y), neodymium (Nd), forming the composition-modified barium titanate powder, and the metals: nickel (Ni), and copper (Cu), which are not explosive, corrosive, or hazardous.

10. The method of claim 1 wherein the method provides an EESU that is not explosive, corrosive, or hazardous and therefore is a safe product when used in electrical vehicles, which include bicycles, tractors, buses, cars, or any device used for transportation or to perform work.

11. The method of claim 1 wherein the method provides an EESU which can store electrical energy generated from solar voltaic cells or other alternative sources for residential, commercial, or industrial applications.

12. The method of claim 1 wherein the method provides an EESU which can store electrical energy from the present utility grid during the night when the demand for electrical power is low and then deliver the electrical energy during the peak power demand times and thus provide an effective power averaging function.

13. The method of claim 1 wherein the method provides a double coating of the composition-modified barium titanate powder and a hot-isostatic-pressing process which together assists in allowing an applied voltage of 3500 V to a dielectric thickness of 12.76×10-6 m to be achieved.

14. The method of claim 1 wherein the method provides a EESU which when fully discharged and recharged, the EESU's initial specifications are not degraded.

15. The method of claim 1 wherein the method provides a EESU which can be safely charged to 3500 V and store at least 52.22 kW·h of electrical energy.

16. The method of claim 1 wherein the method provides a EESU at has a total capacitance of at least 31 F.

17. The method of claim 1 wherein the method provides a EESU that can be rapidly charged without damaging the material or reducing its life.

HERMANN PLAUSON

US Patent 1,540,998 9th June 1925 Inventor: Hermann Plauson

CONVERSION OF ATMOSPHERIC ELECTRIC ENERGY

Please note that this is a re-worded excerpt from this patent. It describes in considerable detail, different methods for abstracting useable electrical power from passive aerial systems. He describes a system with 100 kilowatt output as a “small” system.

Be it known that I, Hermann Plauson, Estonian subject, residing in Hamburg, Germany, have invented certain new and useful improvements in the Conversion of atmospheric Electric Energy, of which the following is a specification.

According to this invention, charges of atmospheric electricity are not directly converted into mechanical energy, and this forms the main difference from previous inventions, but the static electricity which runs to earth through aerial conductors in the form of direct current of very high voltage and low current strength is converted into electro-dynamic energy in the form of high frequency vibrations. Many advantages are thereby obtained and all disadvantages avoided.

The very high voltage of static electricity of a low current strength can be converted by this invention to voltages more suitable for technical purposes and of greater current strength. By the use of closed oscillatory circuits it is possible to obtain electromagnetic waves of various amplitudes and thereby to increase the degree of resonance of such current. Such resonance allows various values of inductance to be chosen which, by tuning the resonance between a motor and the transformer circuit, allows the control of machines driven by this system. Further, such currents have the property of being directly available for various uses, other than driving motors, including lighting, heating and use in electro-chemistry.

Further, with such currents, a series of apparatus may be fed without a direct current supply through conductors and the electro-magnetic high frequency currents may be converted by means of special motors, adapted for electro-magnetic oscillations, into alternating current of low frequency or even into high voltage direct current.

DESCRIPTION OF THE DRAWINGS

Fig. 1.

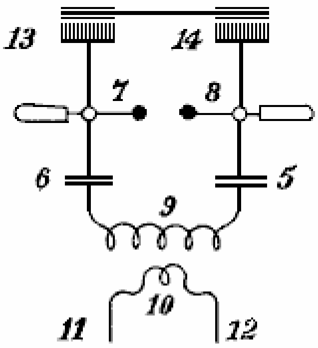

Fig.1 is an explanatory figure

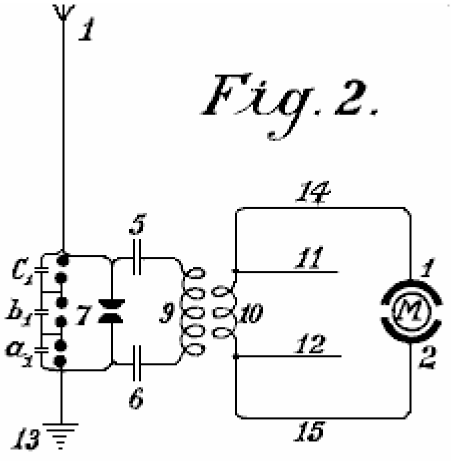
Fig. 2.

Fig.2 is a diagrammatic view of the most simple form.

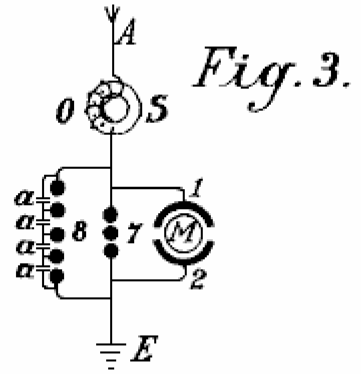
Fig. 3.

Fig.3 shows a method of converting atmospheric electrical energy into a form suitable for use with motors.

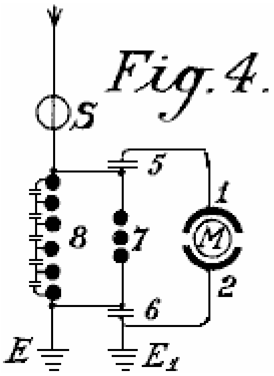
Fig. 4.

Fig.4 is a diagram showing the protective circuitry.

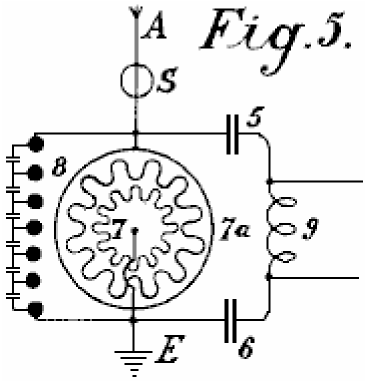

Fig.5 is a diagram of an arrangement for providing control

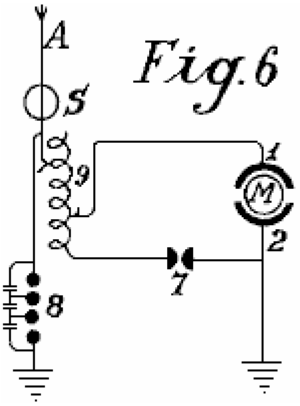

Fig.6 is an arrangement including a method of control

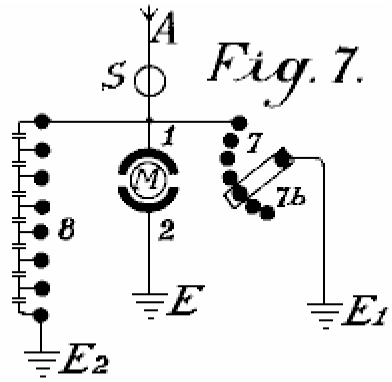

Fig.7 shows how the spark gap can be adjusted

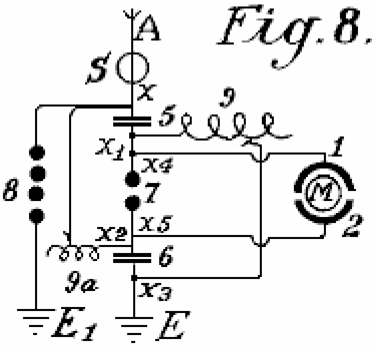

Fig.8 shows a unipolar connection for the motor

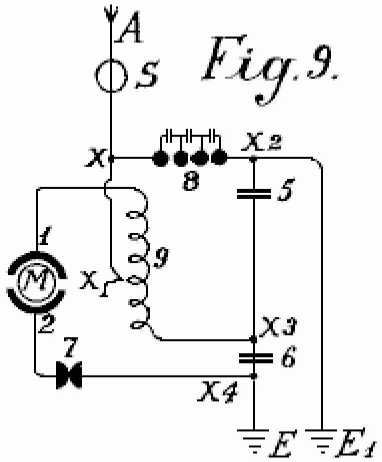

Fig.9 shows a weak coupled system suitable for use with small power motors

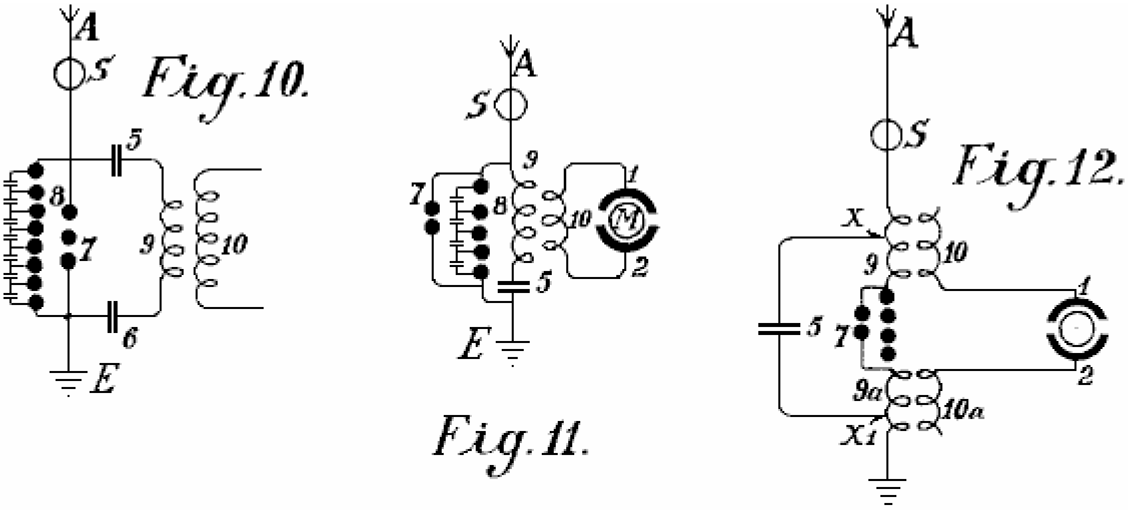

Fig.10, Fig.11 and Fig.12 show modified arrangements

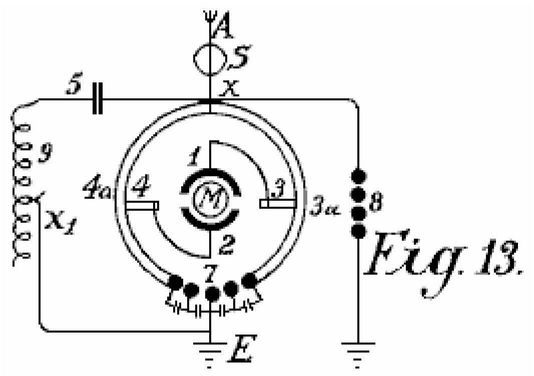
Fig. 13.

Fig.13 shows a form of inductive coupling for the motor circuit

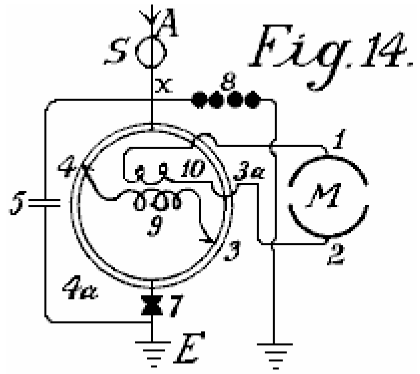
Fig. 14.

Fig.14 is a modified form of Fig.13 with inductive coupling.

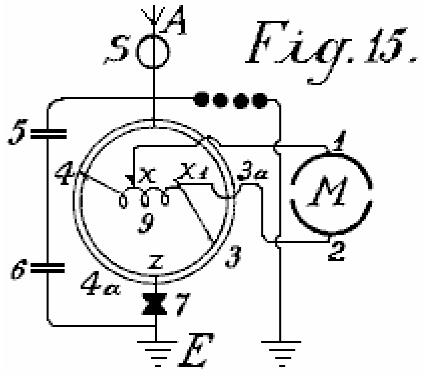
Fig. 15.

Fig.15 is an arrangement with non-inductive motor

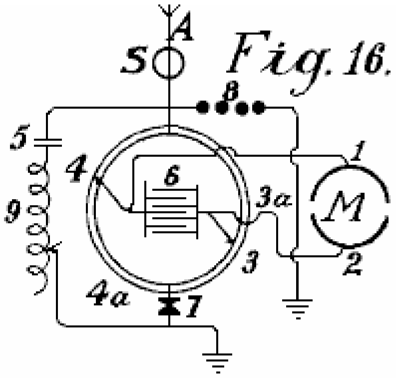
Fig. 16.

Fig.16 is an arrangement with coupling by capacitor.

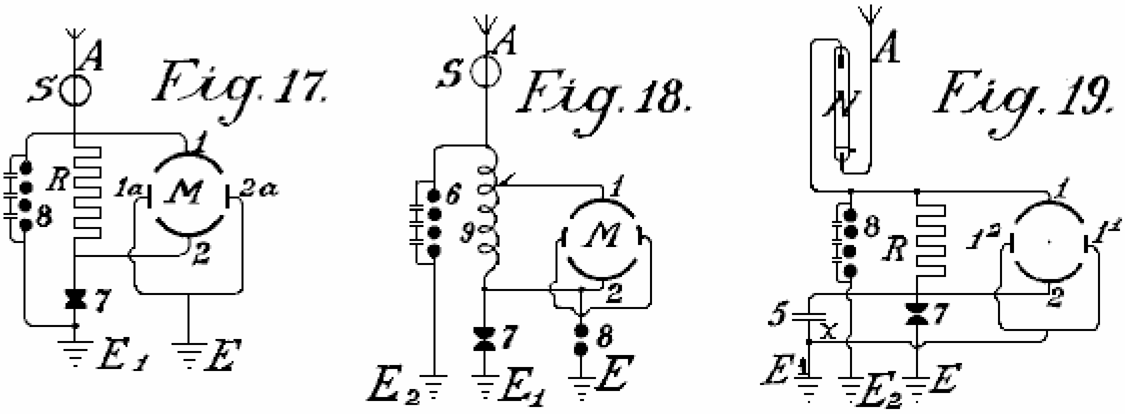

Fig.17, **Fig.18** and **Fig.19** are diagrams showing further modifications

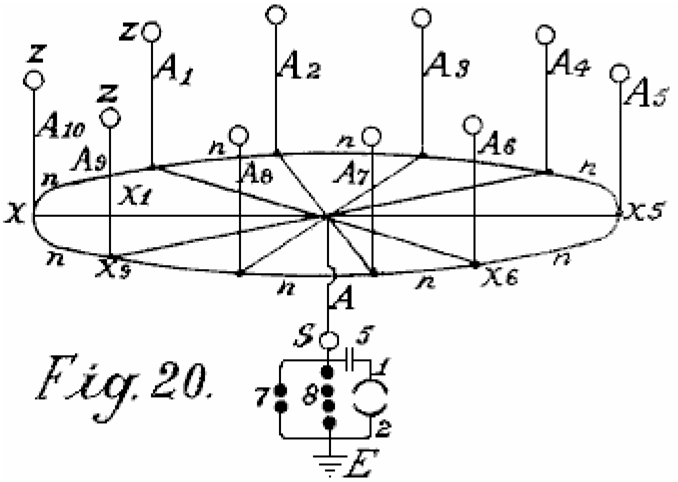

Fig.20 shows a simple form in which the aerial network is combined with special collectors

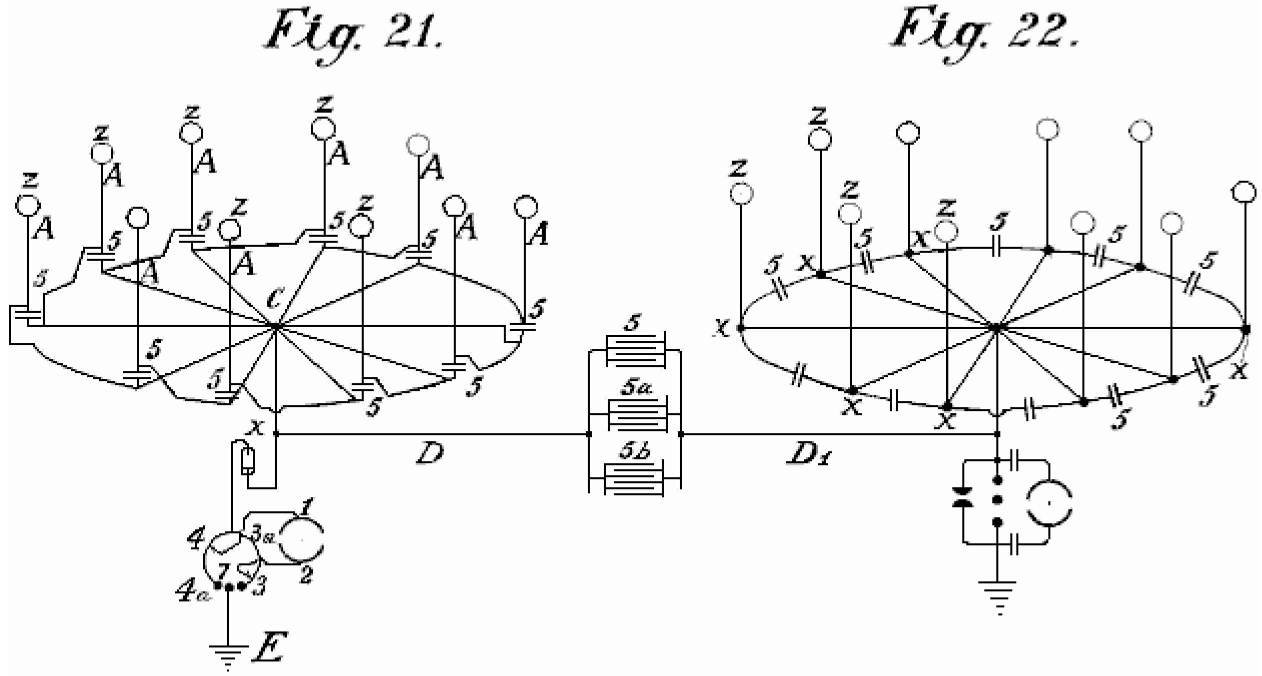

Fig.21 shows diagramatically, an arrangement suitable for collecting large quantities of energy. **Fig.22** is a modified arrangement having two rings of collectors

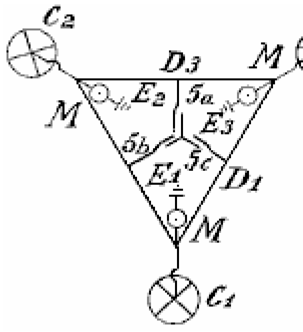

Fig. 23.

Fig.23 shows the connections for three rings of collectors

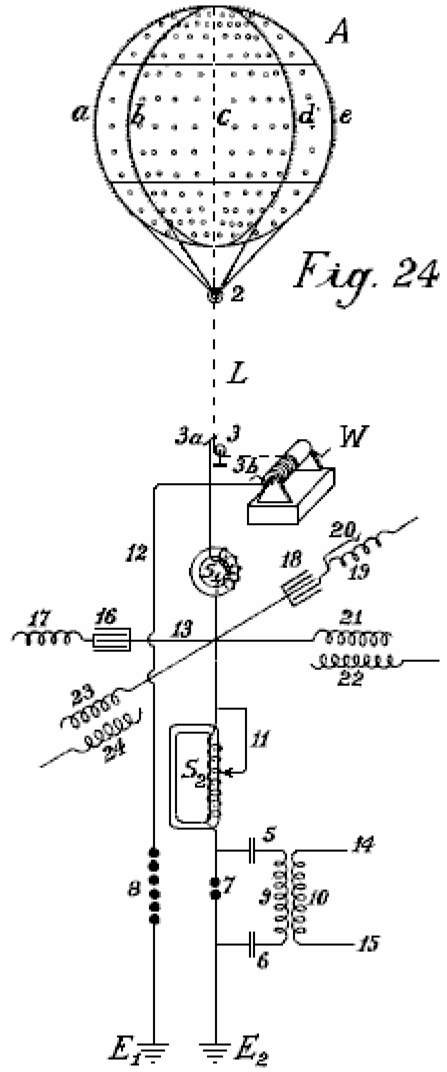

Fig. 24

Fig.24 shows a collecting balloon and diagram of its battery of capacitors

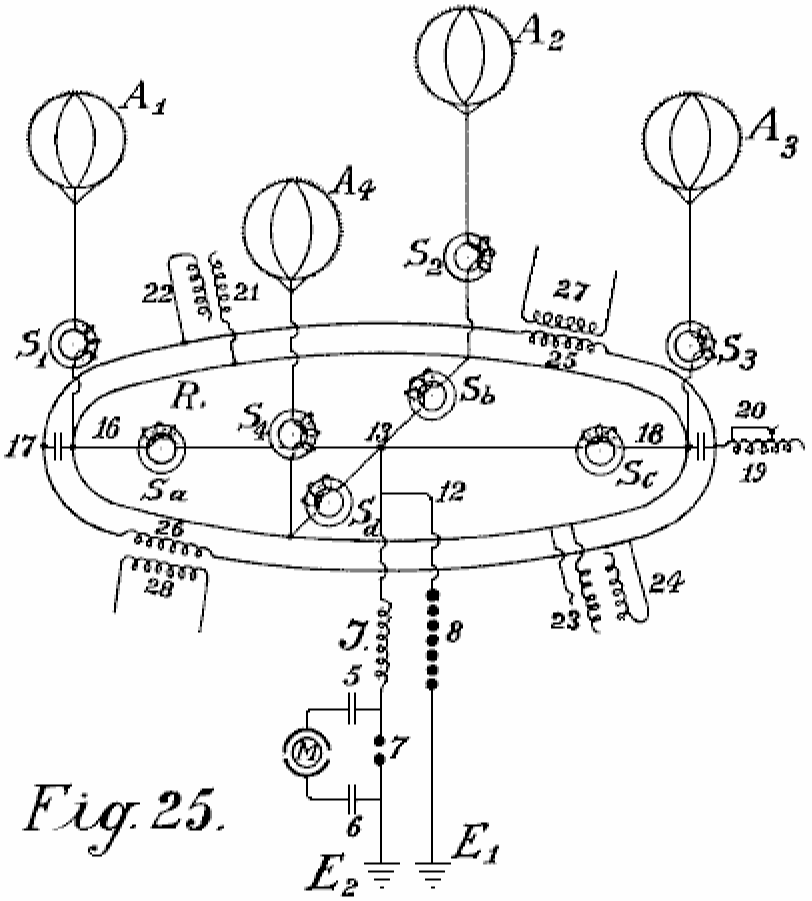

Fig. 25.

Fig.25 and Fig.26 show modified collector balloon arrangements.

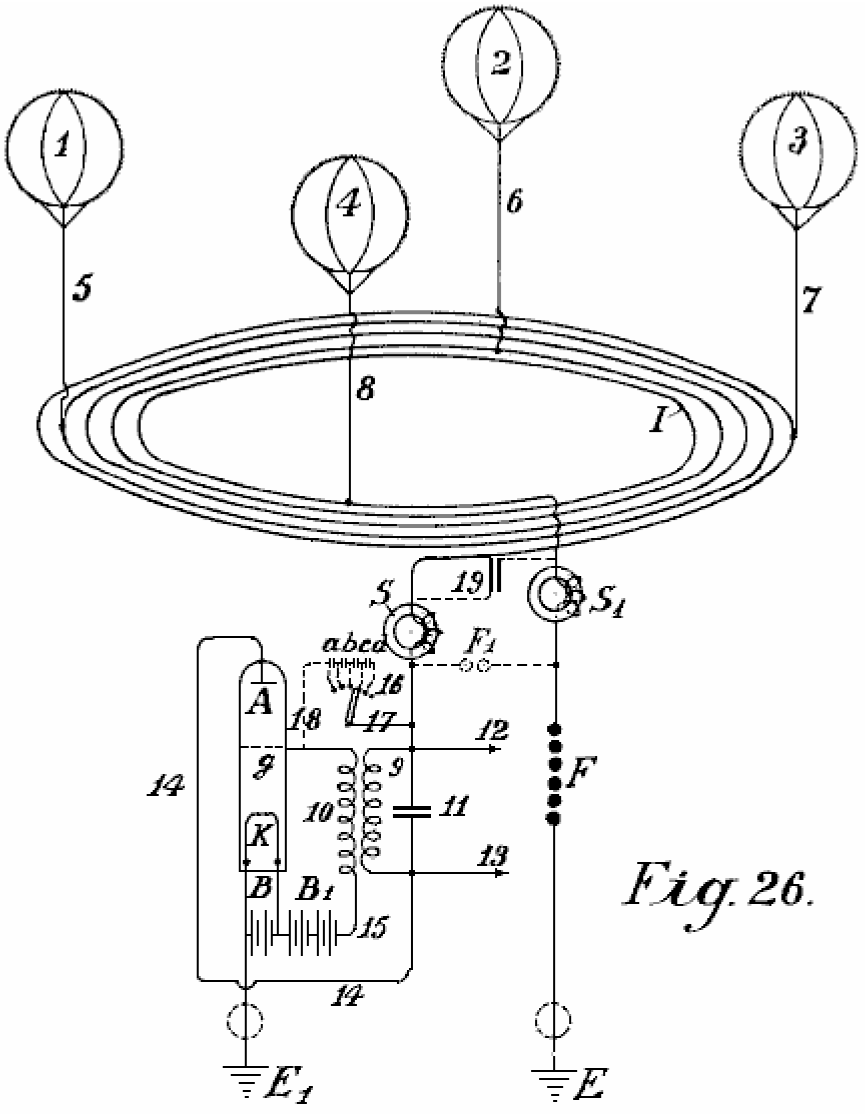
1
2
3
4
5
6
7
8
I
19
S
S1
abcd
F1
16
A
18
17
12
g
9
14
10
11
F
K
13
B
B1
15
14
E1
E

Fig. 26.

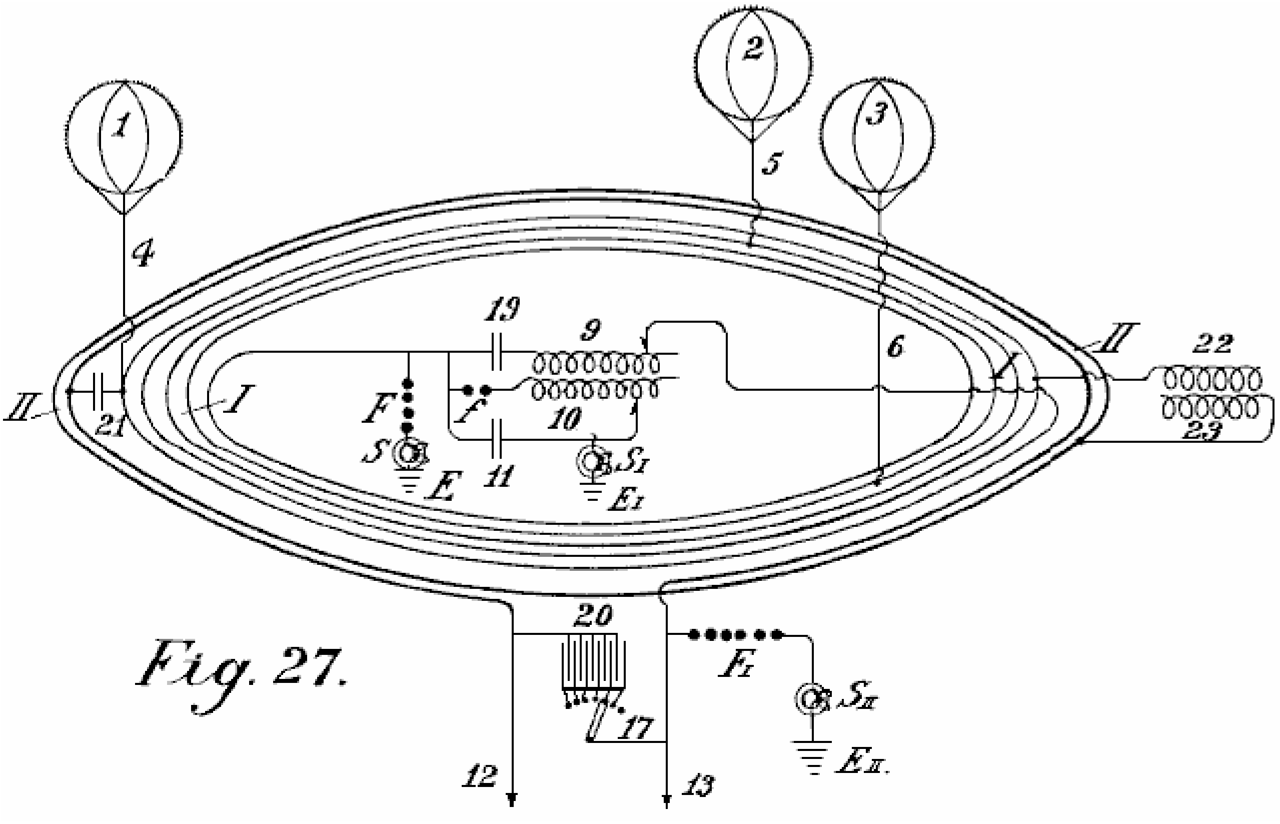

Fig.27 shows a second method of connecting conductors for the balloon aerials.

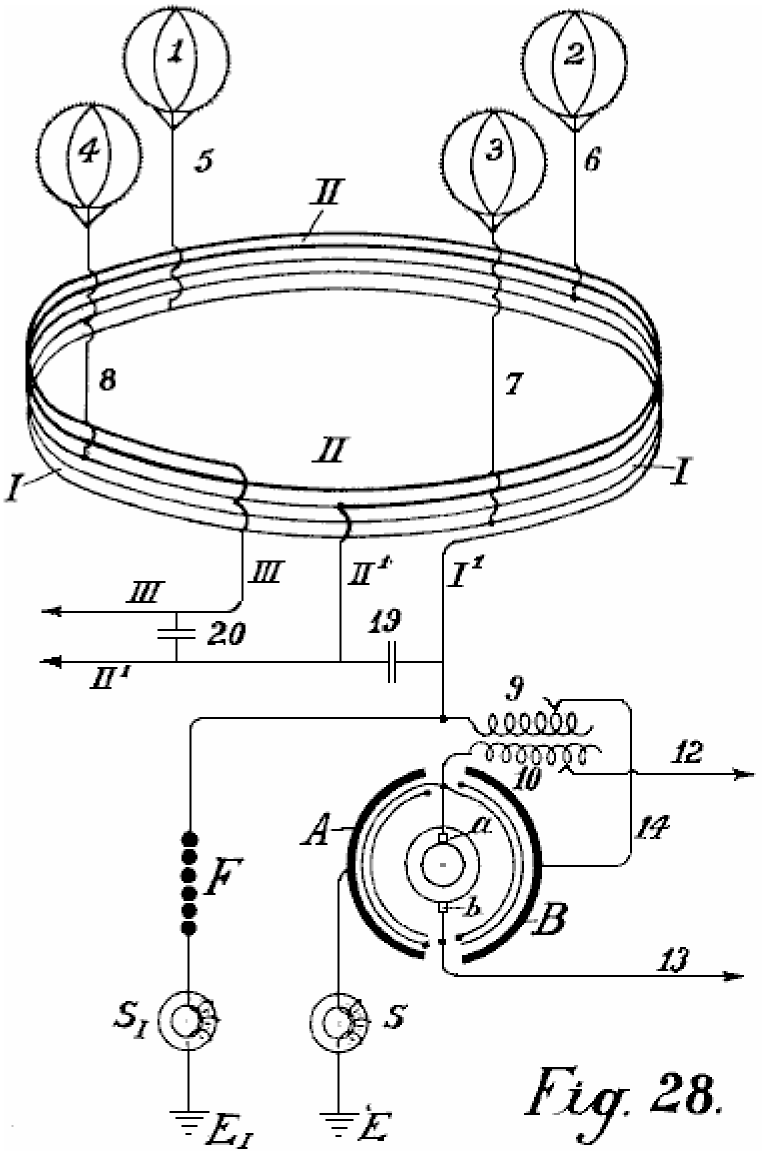

Fig.28 shows an auto-transformer method of connection.

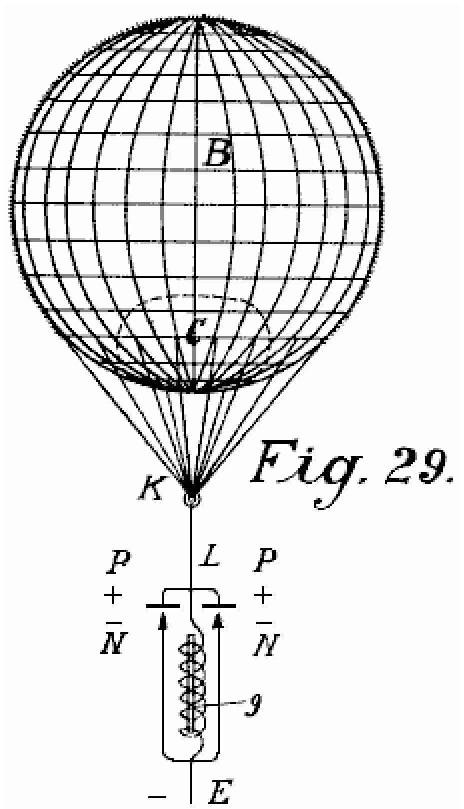

Fig.29 shows the simplest form of construction with incandescent cathode.

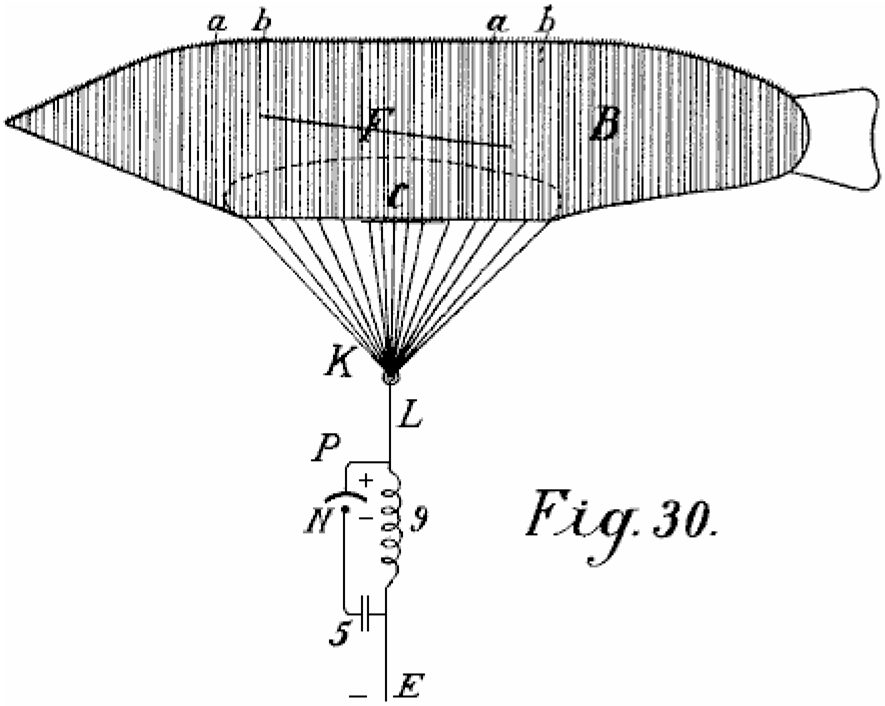

Fig.30 shows a form with a cigar-shaped balloon.

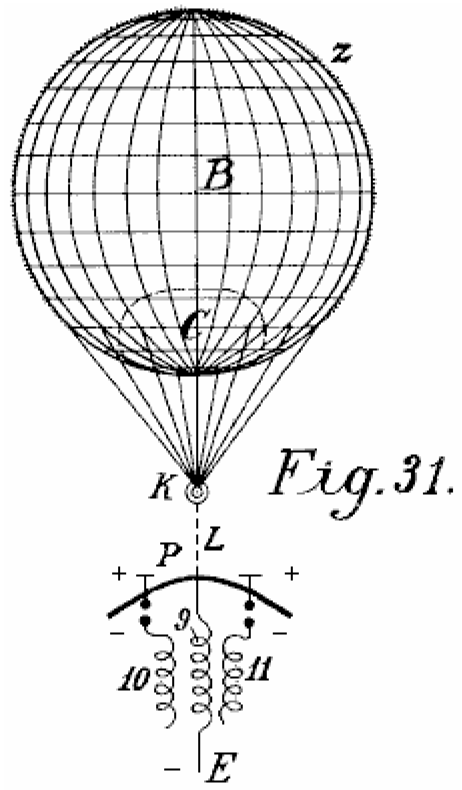

Fig.31 is a modified arrangement.

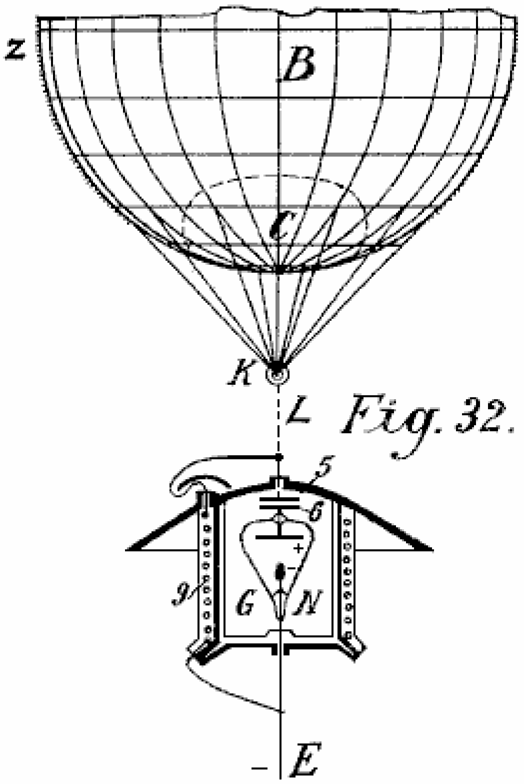

Fig.32 shows a form with cathode and electrode enclosed in a vacuum chamber.

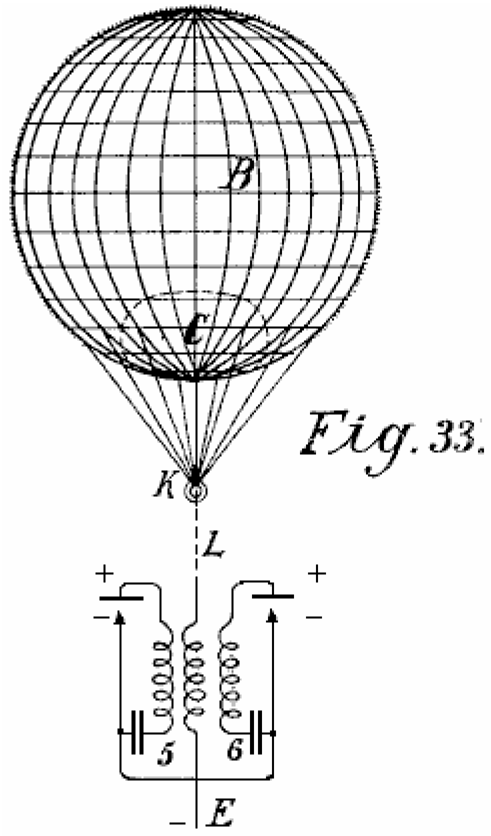

Fig.33 is a modified form of Fig.32

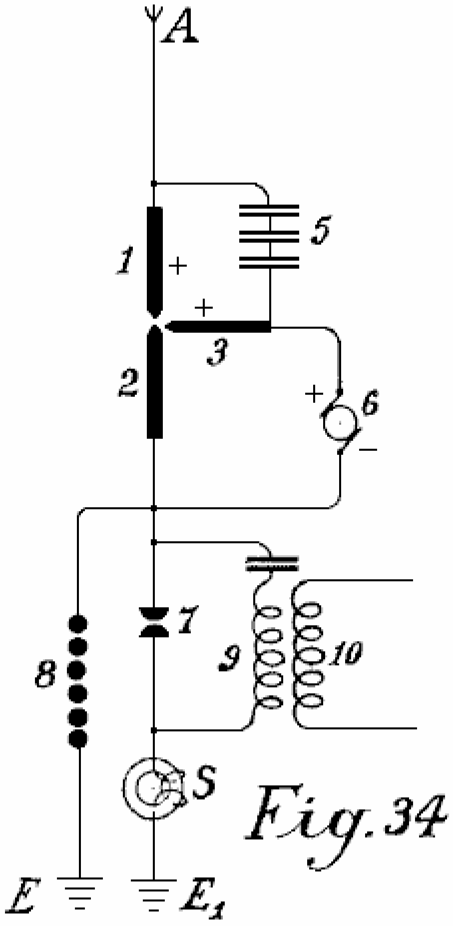

Fig.34 shows an arc light collector.

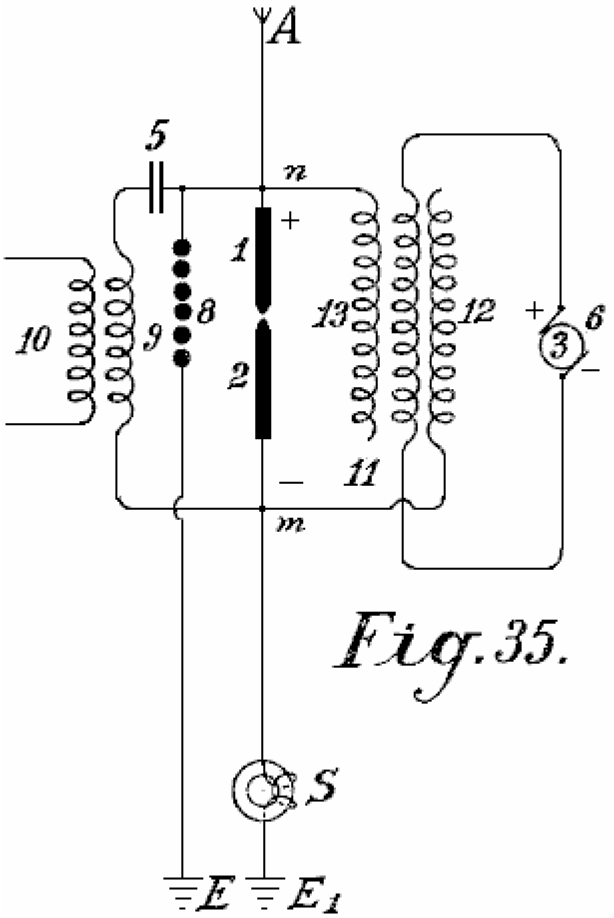

Fig. 35.

Fig.35 shows such an arrangement for alternating current

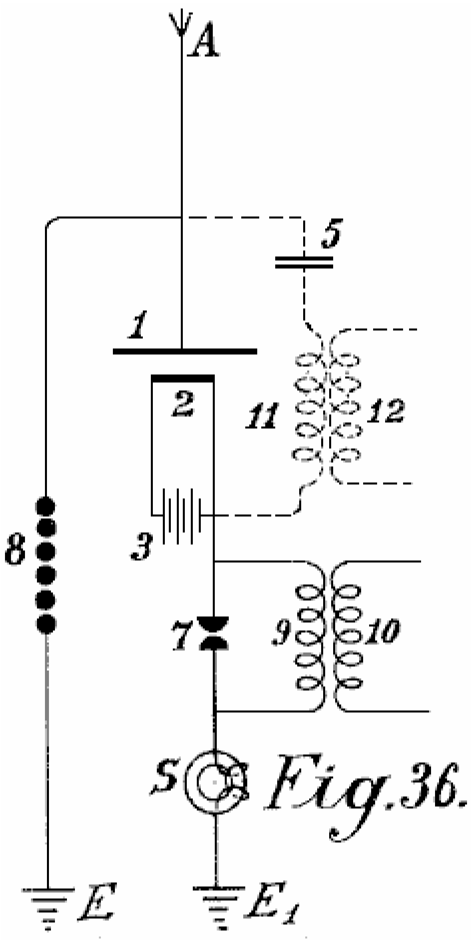

Fig.36 shows an incandescent collector with Nernst lamp

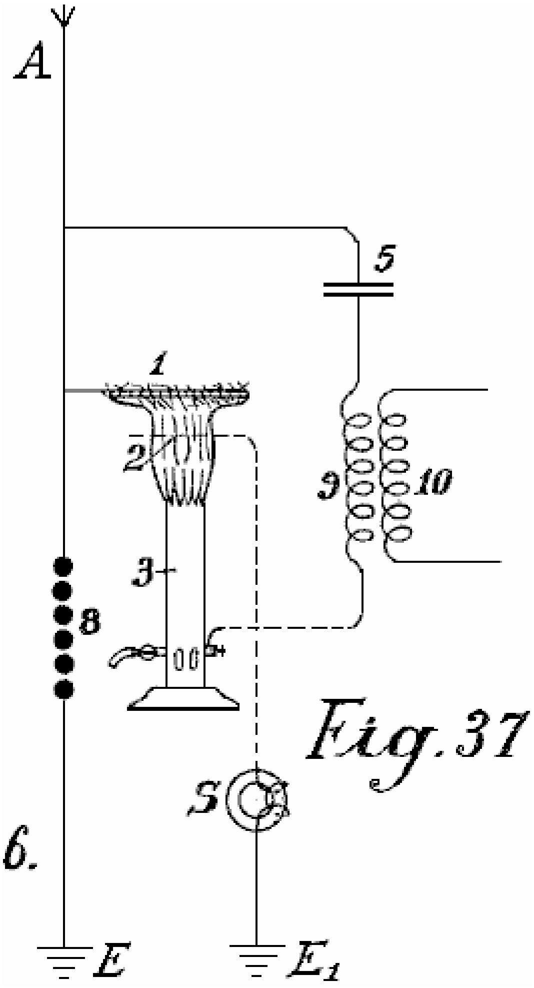

Fig.37 shows a form with a gas flame.

—

Fig. 1.

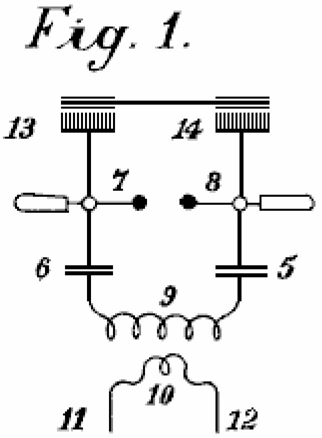

Fig.1 illustrates a simple diagram for converting static electricity into dynamic energy of a high number of oscillations. For the sake of clarity, a Wimshurst machine is assumed to be employed and not an aerial antenna. Items **13** and **14** are combs for collecting the static electricity of the influence machine. Items **7** and **8** are spark-discharging electrodes. Items **5** and **6** are capacitors, **9** is the primary winding of an inductive coil, **10** is the secondary winding whose ends are **11** and **12**. When the disc of the static influence machine is rotated by mechanical means, the combs collect the electric charges, one being positive and one negative and these charge the capacitors **5** and **6** until such a high voltage is developed across the spark gap **7-- 8** that the spark gap is jumped. As the spark gap forms a closed circuit with capacitors **5** and **6**, and inductive resistance **9**, as is well known, waves of high frequency electromagnetic oscillations will pass in this circuit.

The high frequency of the oscillations produced in the primary circuit induces waves of the same frequency in the secondary circuit. Thus, in the primary circuit, electromagnetic oscillations are formed by the spark and these oscillations are maintained by fresh charges of static electricity.

By suitably selecting the ratio between the number of turns in the primary and secondary windings, with regard to a correct application of the coefficients of resonance (capacitance, inductance and resistance) the high voltage of the primary circuit may be suitably converted into a low voltage high current output.

When the oscillatory discharges in the primary circuit become weaker or cease entirely, the capacitors are charged again by the static electricity until the accumulated charge again breaks down across the spark gap. All this is repeated as long as electricity is produced by the static machine through the application of mechanical energy to it.

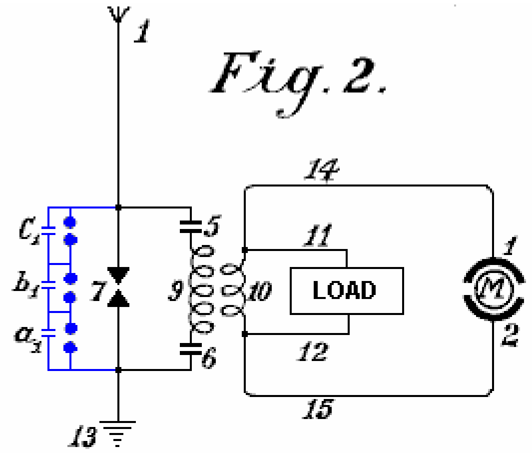

An elementary form of the invention is shown in **Fig.2** in which two spark gaps in parallel are used, one of which may be termed the working gap **7** while the second serves as a safety device for excess voltage and consists of a larger number of spark gaps than the working section, the gaps being arranged in series and which are bridged by very small capacitors a_1, b_1, c_1, which allow uniform sparking in the safety section.

1 is the aerial antenna for collecting charges of atmospheric electricity, **13** is the earth connection of the second part of the spark gap, **5** and **6** are capacitors and **9** is the primary coil winding. When the positive atmospheric electricity seeks to combine with the negative earth charge via aerial **1**, this is prevented by the air gap between the spark gaps. The resistance of spark gap **7** is lower than that of the safety spark gap set of three spark gaps connected in series a which consequently has three times greater air resistance.

Therefore, so long as the resistance of spark gap **7** is not overloaded, discharges take place only through it. However, if the voltage is increased by any influence to such a level that it might be dangerous for charging the capacitors **5** and **6**, or for the coil insulation of windings 9 and 10, the safety spark gap set will, if correctly set, discharge the voltage directly to earth without endangering the machine. Without this second spark gap arrangement, it is impossible to collect and render available large quantities of electrical energy.

The action of this closed oscillation circuit consisting of spark gap **7**, two capacitors **5** and **6**, primary coil **9** and secondary coil **10**, is exactly the same as that of **Fig.1** which uses a Wimshurst machine, the only difference being the provision of the safety spark gap. The high frequency electromagnetic alternating current can be tapped off through the conductors **11** and **12** for lighting and heating purposes. Special motors adapted for working with static electricity or high frequency oscillations may be connected at **14** and **15**.

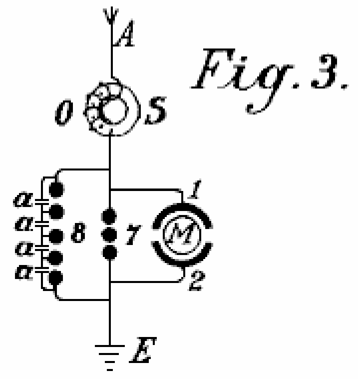

Fig.3.

In addition to the use of spark gaps in parallel, a second measure of security is also necessary for taking the current from this circuit. This is the introduction of protective electromagnets or choking coils in the aerial circuit as shown by **S** in **Fig.3**. A single electromagnet having a core of the thinnest possible separate laminations is connected with the aerial. In the case of high voltages in the aerial network or at places where there are frequent thunderstorms, several such magnets may be connected in series.

In the case of large units, several such magnets can be employed in parallel or in series parallel. The windings of these electromagnets may be simply connected in series with the aerials. In this case, the winding preferably consists of several thin parallel wires, which together, make up the necessary cross-sectional area of wire. The winding may be made of primary and secondary windings in the form of a transformer. The primary winding will then be connected in series with the aerial network, and the secondary winding more or less short-circuited through a regulating resistor or an induction coil. In the latter case it is possible to regulate, to a certain extent, the effect of the choking coils. In the following circuit and constructional diagrams , the aerial electromagnet choke coil is indicated by a simple ring **S**.

Fig.3 shows the most simple way of converting atmospheric electricity into electromagnetic wave energy by the use of special motors adapted for high oscillatory currents or static charges of electrical energy. Recent improvements in motors for working with static energy and motors working by resonance, that is to say, having groups of tuned electromagnetic co-operating circuits render this possible but such do not form part of the present invention.

A motor adapted to operate with static charges, will for the sake of simplicity, be shown in the diagrams as two semi-circles **1** and **2** and the rotor of the motor by a ring **M** (**Fig.3**). **A** is a vertical aerial or aerial network. **S** is the safety choke or electromagnet with coil **O** as may be seen is connected with the aerial **A**. Adjacent to the electromagnet **S**, the aerial conductor is divided into three circuits, circuit **8** containing the safety spark gap, circuit **7** containing the working spark gap, and then a circuit containing the stator terminal **1**, the rotor and stator terminal **2** at which a connection is made to the earth wire. The two spark gaps are also connected metallically with the earth wire. The method of working in these diagrams is as follows:

The positive atmospheric electric charge collected tends to combine with the negative electricity (or earth electricity) connected via the earth wire. It travels along the aerial **A** through the electromagnet **S** without being checked as it flows in the same direction as the direct current. Further, its progress is arrested by two spark gaps placed in the way and the stator capacitors. These capacitors charge until their voltage exceeds that needed to jump the spark gap **7** when a spark occurs and an oscillatory charge is obtained via the closed oscillation circuit containing motor **M**. The motor here forms the capacity and the necessary inductance and resistance, which as is well known, are necessary for converting static electricity into electromagnetic wave energy.

The discharges are converted into mechanical energy in special motors and cannot reach the aerial network because of the electromagnet or choke. If, however, when a spark occurs at spark gap **7**, a greater quantity of atmospheric electricity tends to flow to earth, then a counter voltage is induced in the electromagnet, which is greater the more rapidly and strongly the flow of current direct to earth is. This opposing voltage causes the circuit to exhibit a sufficiently high resistance to prevent a short circuit between the atmospheric electricity and the earth.

The circuit containing spark gap **8**, having a different wave length which is not in resonance with the natural frequency of the motor, does not endanger the motor and serves as security against excess voltage, which, as practical experiments have shown, may still arise in certain cases.

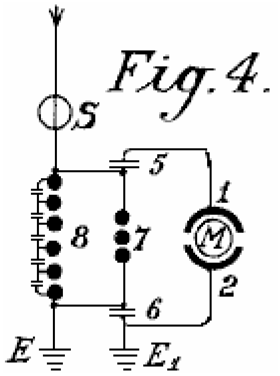
Fig.4.

In **Fig.4**, spark gap **7** is shunted across capacitors **5** and **6** from the motor **M**. This arrangement provides improved over-voltage protection for the motor and it gives a uniform excitation through the spark gap **7**.

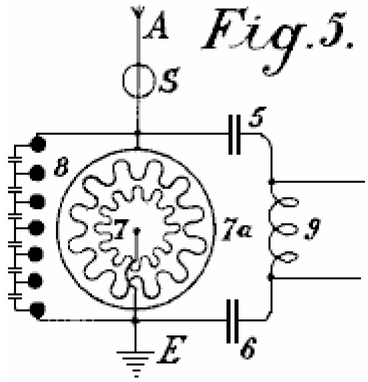
Fig.5.

Fig.5 shows an arrangement for producing large currents which can be used direct without motors, to provide heating and lighting. The main difference here is that the spark gap consists of a star-shaped disc **7** which can rotate on its own axis and is rotated by a motor opposite similarly fitted electrodes **7a**. When separate points of starts face one another, discharges take place, thus forming an oscillation circuit with capacitors **5** and **6** and inductor **9**. It is evident that a motor may also be connected directly to the ends of inductor **9**.

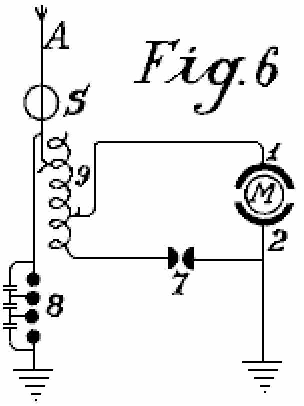
Fig.6

Fig.6 shows how the oscillation circuit may have a motor connected via a variable inductor which opposes any excess voltages which might be applied to the motor. By cutting the separate coils **9** (coupled inductively to the aerial) in or out, the inductive action on the motor may be more or less increased, or variable aerial action may be exerted on the oscillation circuit.

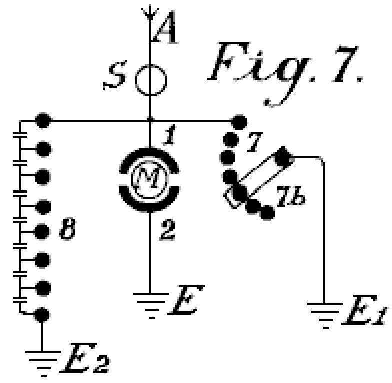
Fig. 7.

In **Fig.7** the oscillation circuit is closed through the earth (**E** and **E_1**). The spark gap **7** may be increased or reduced by means of a contact arm **7b**.

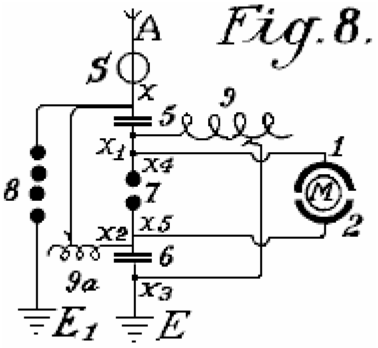
Fig. 8.

Fig.8 shows a unipolar connection of the motor with the aerial network. Here, two oscillation circuits are closed through the same motor. The first oscillation circuit passes from aerial **A** through electromagnet **S**, point **x**, inductance **9a** to the earth capacitor **6**, across spark gap **7** to the aerial capacitor **5** and back to point **x**. The second oscillation circuit starts from the aerial **5** at the point **x1** through inductor **9** to the earth capacitor **6** at the point **x3**, through capacitor **6**, across spark gap **7** back to point **x1**. The motor itself, is inserted between the two points of spark gap **7**. This arrangement produces slightly dampened oscillation wave currents.

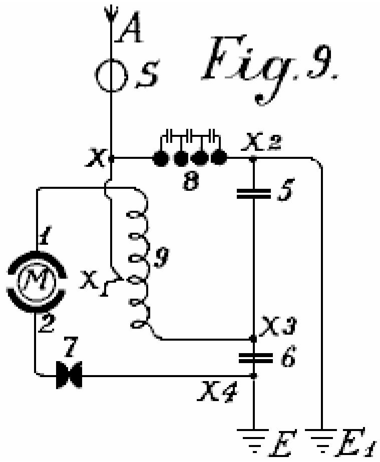
Fig. 9.

Fig.9 shows a loosely coupled system intended for small motors for measuring purposes. **A** is the serial, **S** is the electromagnet or aerial inductor, **9** the inductor, **7** the spark gap, **5** and **6** capacitors, **E** the earth, **M** the motor, and **1** and **2** the stator connections of the motor which is directly connected to the oscillator circuit.

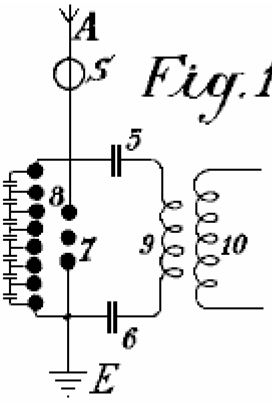

Fig.10.

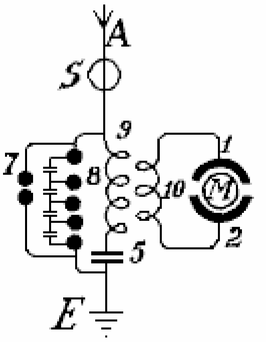

Fig.11.

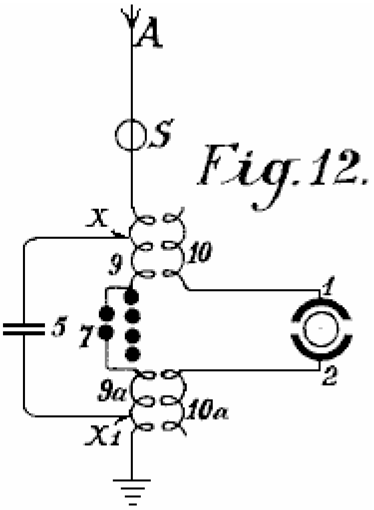

Fig.12.

Fig.10 shows a motor circuit with purely inductive coupling. The motor is connected with the secondary wire **10** as may be seen in **Fig.11** in a somewhat modified circuit. The same applies to the circuit of **Fig.12**.

The circuit diagrams shown so far, allow motors of small to medium strength to be operated. For large aggregates, however, they are too inconvenient as the construction of two or more oscillation circuits for large amounts of energy is difficult; the governing is still more difficult and the danger in switching on or off is greater.

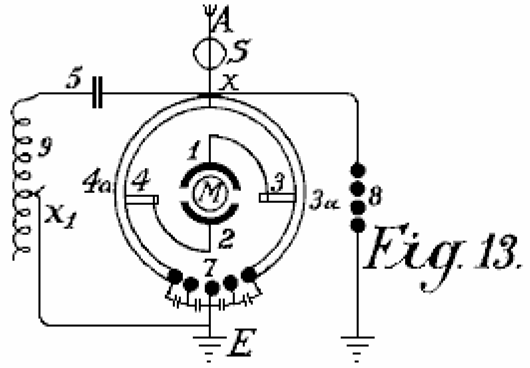

Fig. 13.

A means for overcoming such difficulties is shown in **Fig.13**. The oscillation circuit shown here, runs from point **x** over capacitor **5**, variable inductor **9**, spark gap **7** and the two segments **3a** and **3b** forming arms of a Wheatstone bridge, back to **x**. If the motor is connected by brushes **3** and **4** transversely to the two arms of the bridge as shown in the drawing, electromagnetic oscillations of equal sign are induced in the stator surfaces **1** and **2** and the motor does not revolve. If however, the brushes **3** and **4** are moved in common with the conducting wires **1** and **2** which connect the brushes with the stator poles, a certain alteration or displacement of the polarity is obtained and the motor commences to revolve.

The maximum action will result if one brush **3** comes on the central sparking contact **7** and the other brush **4** on the part **x**. In practice however, they are usually brought on to the central contact **7** but only held in the path of the bridge segments **4a** and **3a** in order to avoid connecting the spark gaps with the motor oscillation circuit.

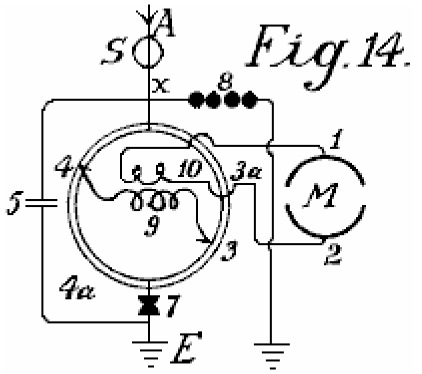

Fig.14.

As this prevents the whole of the oscillation energy acting on the motor, it is better to adopt the modification shown in **Fig.14**. The only difference here is that the motor is not wired directly to the segments of the commutator, but instead it is wired to secondary coil **10** which receives induced current from primary coil **9**. This arrangement provides a good transforming action, a loose coupling and an oscillation circuit without a spark gap.

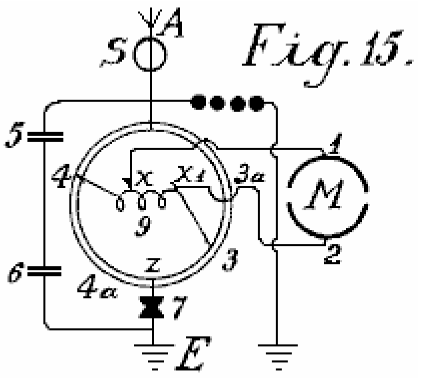
Fig. 15.

In **Fig.15**, the motor is wired directly to the primary coil at **x** and **x1** after the principle of the auto-transformer. In **Fig.16**, instead of an inductor, capacitor **6** replaces the inductance and is inserted between the segments **3a** and **4a**. This has the advantage that the segments **3a** and **4a** need not be made of solid metal, but may consist of spiral coils which allow a more exact regulation, and high inductance motors may be used.

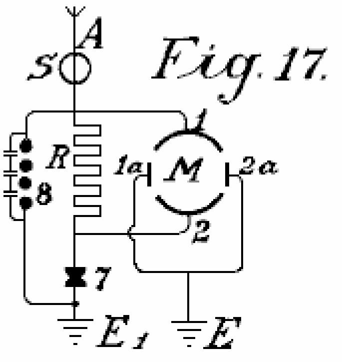
Fig. 17.

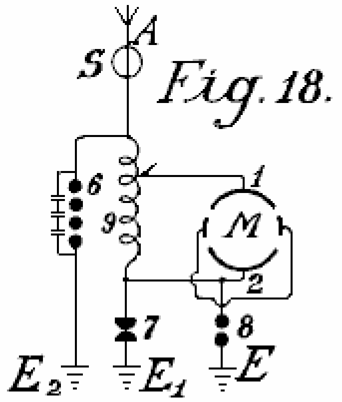
Fig. 18.

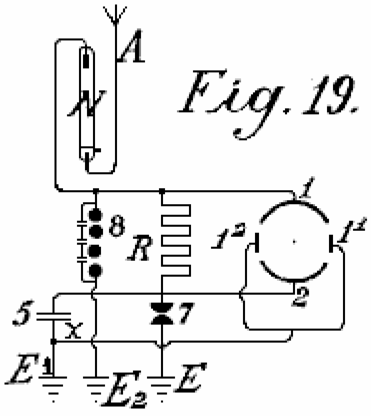
Fig. 19.

The circuits shown in **Fig.17**, **Fig.18** and **Fig.19** may be used with resonance and particularly with induction capacitor motors; between the large stator induction capacitor surfaces, small reversing pole capacitors are connected which are lead together to earth. Such reversing poles have the advantage that, with large quantities of electrical energy, the spark formation between the separate oscillation circuits ceases.

Fig.19 shows another method which prevents high frequency electromagnetic oscillations formed in the oscillation circuit, feeding back to the aerial. It is based on the well known principle that a mercury lamp, one electrode of which is formed of mercury, the other of solid metal such as steel, allows an electric charge to pass in only one direction: from the mercury to the steel and not vice versa. The mercury electrode of the vacuum tube **N** is therefore connected with the aerial conductor and the steel electrode with the oscillation circuit. Charges can then only pass from the aerial through the vacuum tube to the oscillation circuit and no flow occurs in the opposite direction. In practice, these vacuum tubes must be connected behind an electromagnet as the latter alone provides no protection against the danger of lightning.

As regards the use of spark gaps, all arrangements as used for wireless telegraphy may be used. Of course, the spark gaps in large machines must have a sufficiently large surface. In very large stations they are cooled in liquid carbonic acid or better still, in liquid nitrogen or hydrogen; in most cases the cooling may also take place by means of liquefied low homologues of the metal series or by means of hydrocarbons, the freezing point of which lies between -90^{0}C and -40^{0}C. The spark gap casing must also be insulated and be of sufficient strength to be able to resist any pressure which may arise. Any undesirable excess super-pressure which may be formed must be let off automatically. I have employed with very good results, mercury electrodes which were frozen in liquid carbonic acid, the cooling being maintained during the operation from the outside, through the walls.

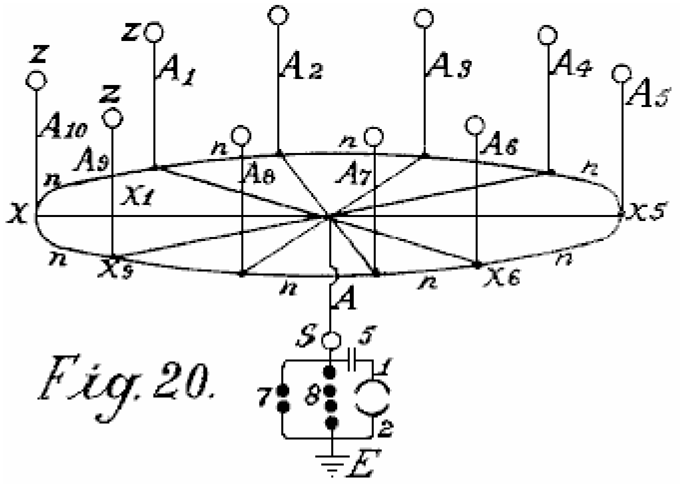

Fig. 20.

Fig.20 shows one of the most simple forms of construction of an aerial network in combination with collectors, transformers and the like. **E** is the earth wire, **8** the safety spark gap, **7** the working spark gap, **1** and **2** the stator surfaces of the motor, **5** a capacitor battery, **S** the protective magnet which is connected with the coil in the aerial conductor, $\mathbf{A}^{\mathbf{1}}$ to $\mathbf{A}^{\mathbf{10}}$ aerial antennae with collecting balloons, **N** horizontal collecting or connecting wires, from which, a number of connections run to the centre.

The actual collectors consist of metal sheaths, preferably made of an aluminium magnesium alloy, and are filled with hydrogen or helium, and are attached to copper-plated steel wires. The size of the balloon is selected so that the actual weight of the balloon and its conducting wire is supported by it. Aluminium spikes, made and gilded as described below, are arranged on top of the balloons in order to produce a conductor action. Small quantities of radium preparations, more particularly, polonium-ionium or mesothorium preparations, considerably increase the ionisation, and the performance of these collectors.

In addition to metal balloons, fabric balloons which are sprayed with a metallic coating according to Schoop's metal-spraying process may also be used. A metallic surface may also be produced by lacquering with metallic bronzes, preferably according to Schoop's spraying process, or lacquering with metallic bronze powders in two electrical series of widely different metals, because this produces a considerably increased collecting effect.

Instead of the ordinary round balloons, elongated cigar-shaped ones may be employed. In order also to utilise the frictional energy of the wind, patches or strips of non-conducting substances which produce electricity by friction, may be attached to the metallised balloon surfaces. The wind will impart a portion of its energy in the form of frictional electricity, to the balloon casing, thus substantially increasing the collection effect.

In practice however, very high towers of up to 300 metres may be employed as antennae. In these towers, copper tubes rise freely further above the top of the tower. A gas lamp secured against the wind is then lit at the point of the copper tube and a netting is secured to the copper tube over the flame of this lamp to form a collector. The gas is conveyed through the interior of the tube, up to the summit. The copper tube must be absolutely protected from moisture at the place where it enters the tower, and rain must be prevented from running down the walls of the tower, which might lead to a bad catastrophe. This is done by bell-shaped enlargements which expand downwards, being arranged in the tower in the form of high voltage insulators of Siamese pagodas.

Special attention must be devoted to the foundations of such towers. They must be well insulated from the ground, which may be achieved by first embedding a layer of concrete in a box form to a sufficient depth in the ground, and inserting in this, an asphalt lining and then glass bricks cast about 1 or 2 metres in thickness. Over this in turn, there is a ferro-concrete layer in which alone the metal foot of the tube is secured. This concrete block must be at least 2 metres from the ground and at the sides, be fully protected from moisture by a wooden covering. In the lower part of the tower, a wood or glass housing should be constructed to protect the capacitors and/or motors. In order to ensure that the ground lead connects to the water-table, a well insulated pit lined with vitreous bricks must be provided. Several such towers are erected at equal distances apart and connected with a horizontal conductor. The horizontal connecting wires may either run directly from tower to tower or be carried on bell-shaped insulators similar to those in use for high voltage electricity transmission lines. The width of the aerial tower network may be of any suitable size and the connection of the motors can take place at any convenient location.

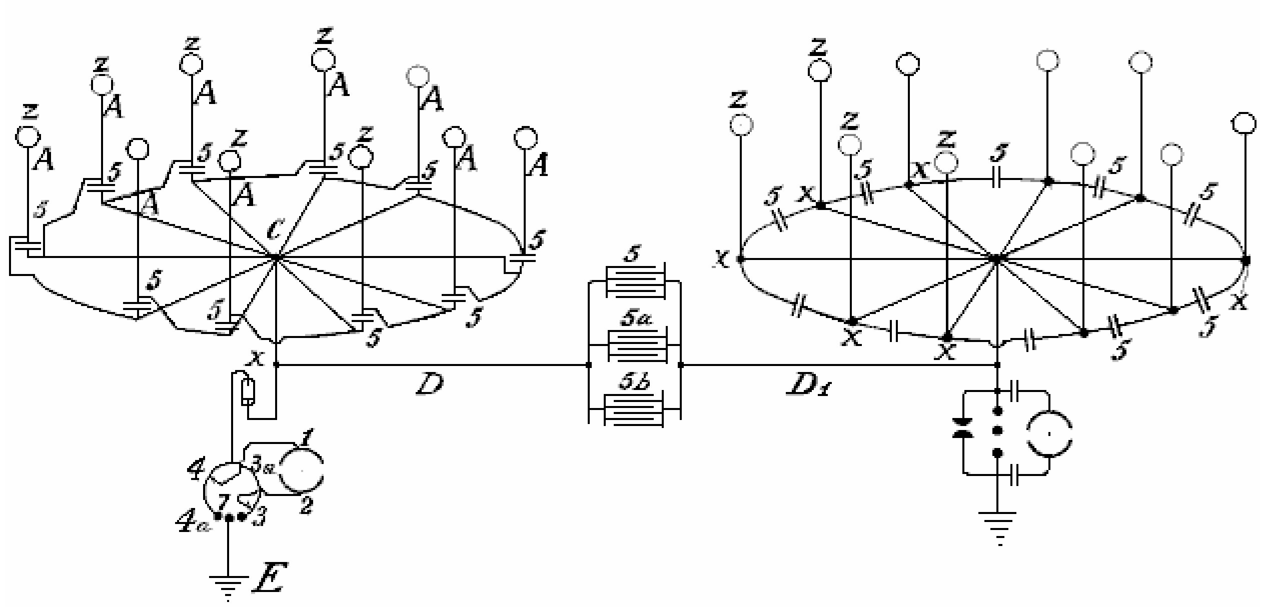

Fig. 21. Fig. 22.

In order to collect large quantities of electricity with few aerials, it is as well to provide the aerial conductor with sets of capacitors as shown in the two methods of construction illustrated in **Fig.21** and **Fig.22**. In **Fig.21** the set of capacitors **5** is connected between the aerials **Z** via lead **A** and an annular conductor from which horizontal run to the connecting points **C** to which the earth wire is connected. **Fig.22** shows a similar arrangement.

Should two such series of antenna rings be shown by a voltmeter to have a large voltage difference (for example, one in the mountains and one on the plain) or even of a different polarity, these differences may be compensated for by connecting sufficiently large capacitor sets (**5, 5a, 5b**) by means of Maji star conductors **D** and **D**^{1}. **Fig.23**, shows a connection of three such rings of collectors are positioned in a triangle with a central set of capacitors.

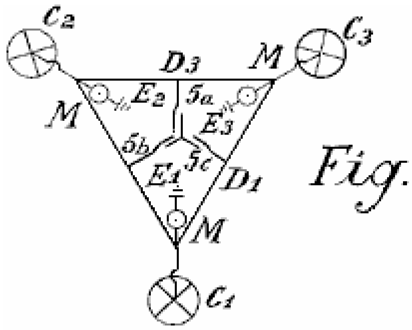

Fig. 23.

The capacitor sets of such large installations must be embedded in liquefied gasses or in liquids freezing at very low temperatures. In such cases, a portion of the atmospheric energy must be employed for liquefying these gasses. It is also preferable to employ pressure. By this means, the capacitor surfaces may be reduced in area and still allow the storage of large quantities of energy to be stored, secure against breakdown. For the smaller installations, the immersing of the capacitors in well insulated oil or the like, is sufficient. Solid substances, on the other hand, cannot be employed as insulators.

The arrangement in the diagrams shown earlier has always shown both poles of the capacitors connected to the aerial conductors. An improved method of connection has been found to be very advantageous. In this method, only one pole of each capacitor is connected to the collecting network. Such a method of connection is very important, as by means of it, a constant current and an increase in the normal working voltage is obtained. If, for example, a collecting balloon aerial which is allowed to rise to a height of 300 metres, shows 40,000 volts above earth voltage, in practice it has been found that the working voltage (with a withdrawal of the power as described earlier by means of oscillating spark gaps and the like) is only about 400 volts. If however, the capacity of the capacitor surfaces be increased, which capacity in the above mentioned case was equal to that of the collecting surface of the balloon aerials, to double the amount, by connecting the capacitors with only one pole, the voltage rises under an equal withdrawal of current up to and beyond 500 volts. This can only be ascribed to the favourable action of the connecting method.

In addition to this substantial improvement it has also been found preferable to insert double inductances with electromagnets and to place the capacitors preferably between two such electromagnets. It has also been found that the useful action of such capacitors can be further increased if an induction coil is connected as an inductive resistance to the unconnected pole of the capacitor, or still better if the capacitor itself be made as an induction capacitor. Such a capacitor may be compared to a spring, which when compressed, carries in itself accumulated force, which it gives off again when released. In charging, a charge with reversed sign is formed at the other free capacitor pole, and if a short circuit occurs through the spark gap, the accumulated energy is again given back since now new quantities of energy are induced at the capacitor pole connected to the conductor network, which in fact, charges with opposite sign to that at the free capacitor pole. The new induced charges have of course, the same sign as the collector network. The whole voltage energy in the aerial is thereby increased. In the same time interval, larger quantities of energy are accumulated than is the case without such capacitor sets being inserted.

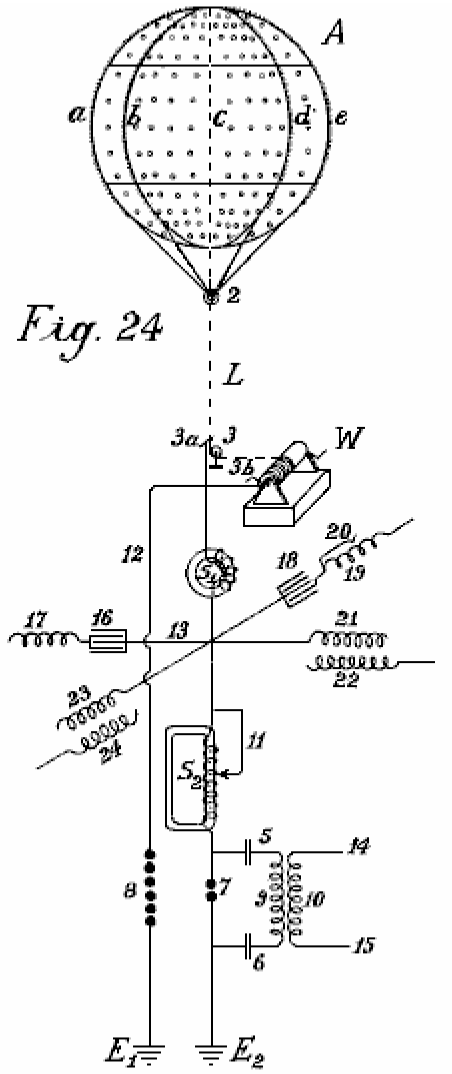
Fig. 24

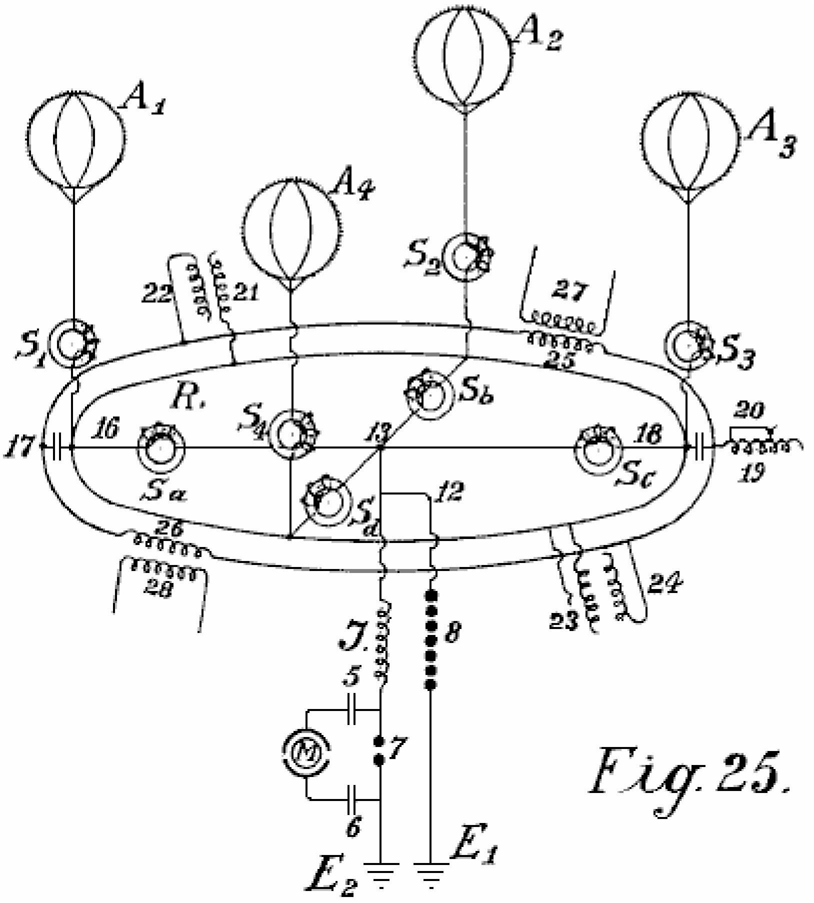
Fig. 25.

In **Fig.24** and **Fig.25**, two different connection diagrams are illustrated in more detail. **Fig.24** shows a collecting balloon along with its earth connections. **Fig.25** shows four collecting balloons and the parallel connection of their capacitor sets.

A is the collecting balloon made of an aluminium magnesium alloy (electron metal magnalium) of a specific gravity of 1.8 and a plate thickness of 0.1 mm to 0.2 mm. Inside, there are eight strong vertical ribs of T-shaped section of about 10 mm to 20 mm in height and about 3 mm in thickness, with the projecting part directed inwards (indicated by **a, b, c, d** and so forth). They are riveted together to form a firm skeleton and are stiffened in a horizontal direction by two cross ribs. The ribs are further connected to one another internally and transversely by means of thin steel wires, whereby the balloon obtains great strength and elasticity. Rolled plates of 0.1 mm to 0.2 mm in thickness made of magnalium alloy are then either soldered or riveted on to this skeleton so that a fully metallic casing with a smooth external surface is created. Well silvered or coppered aluminium plated steel wires run from each rib to the fastening ring **2**. Further, the coppered steel hawser **L**, preferably twisted out of separate thin wires (shown as dotted lines in **Fig.24**) and which must be long enough to allow the balloon to rise to the desired height, leads to a metal roller or pulley **3** and on to a winch **W**, which must be well insulated from the earth. By means of this winch, the balloon which is filled with hydrogen or helium, can be allowed to rise to a suitable height of 300 to 5,000 metres, and brought to the ground for recharging or repairs.

The actual current is taken directly through a friction contact from the metal roller **3** or from the wire or even from the winch, or simultaneously from all three by means of brushes (**3**, **3a** and **3b**). Beyond the brushes, the conductor is divided, the paths being:- firstly, over **12** to the safety spark gap **8**, on to the earth conductor **E^1**, and secondly over electromagnet **S^1**, point **13**, to a second loose electromagnet having an adjustable coil **S^2**, then to the spark gap **7** and to the second earth conductor **E^2**. The actual working circuit is formed through the spark gap **7**, capacitors **5** and **6**, and through the primary coil **9**; here the static electricity formed by oscillatory discharges is accumulated and converted into high frequency electromagnetic oscillations. Between the electromagnets **S^1** and **S^2** at the crossing point **13**, four capacitor sets are introduced which are only indicated diagramatically in the drawings by a single capacitor. Two of these sets of capacitors (**16** and **18**) are made as plate capacitors and prolonged by regulating induction coils or spirals **17** and **19** while the two others (**21** and **23**) are induction capacitors. As may be seen from the drawings, each of the four capacitor sets, **16**, **18**, **21** and **23** is connected by only one pole to either the aerial or to the collector conductor. The second poles **17**, **19**, **22** and **24** are open. In the case of plate capacitors having no inductive resistance, an induction coil is inserted. The object of such a spiral or coil is the displacement of phase of the induction current by $^1/_4$ periods, whilst the charging current of the capacitor poles which lie free in the air, works back to the collector aerial. The consequence of this is that in discharges in the collector aerial, the back-inductive action of the free poles allows a higher voltage to be maintained in the aerial collecting conductor than would otherwise be the case. It has also been found that such a back action has an extremely favourable effect on the wear of the contacts. Of course, the inductive effect may be regulated at will within the limits of the size of the induction coil, the length of the coil in action being adjustable by means of wire connection without induction (see **Fig.24** No. **20**).

S^1 and **S^2** may also be provided with such regulating devices, in the case of **S^2** illustrated by **11**. If excess voltage be formed, it is conducted to earth through wire **12** and spark gap **8**, or through any other suitable apparatus, since this voltage would be dangerous for the other components. The action of these capacitor sets has already been described.

The small circles on the collector balloon indicate places where small patches of extremely thin layers (0.01 to 0.05 mm thick) of zinc amalgam, gold amalgam or other photoelectric acting metals, are applied to the balloon casing of light metal. Such metallic patches may also be applied to the entire balloon as well as in greater thickness to the conducting network. The capacity of the collector is thereby considerably strengthened at the surface. The greatest possible effect in collecting may be obtained by polonium amalgams and the like. On the surface of the collector balloon, metal points or spikes are also fixed along the ribs. These spikes enhance the charge collection operation. Since it is well known that the sharper the spikes, the less the resistance of the spikes, it is therefore extremely important to use spikes which are as sharp as possible. Experiments have shown that the formation of the body of the spike or point also play a large part, for example, spikes made of bars or rollers with smooth surfaces, have point resistance many times greater than those with rough surfaces. Various kinds of spike bodies have been experimented with for the collector balloons and the best results were given with spikes which were made in the following way: Fine points made of steel, copper, nickel or copper and nickel alloys, were fastened together in bundles and then placed as anode with the points placed in a suitable electrolyte (preferably in hydrochloric acid or muriate of iron solutions) and so treated with weak current driven by 2 to 3 volts. After 2 to 3 hours, according to the thickness of the spikes, the points become extremely sharp and the bodies of the spikes have a rough surface. The bundle can then be removed and the acid washed off with water. The spikes are then placed as cathode in a bath containing a solution of gold, platinum, iridium, palladium or wolfram salts or their compounds, and coated at the cathode galvanically with a thin layer of precious metal, which mush however be sufficiently firm to protect them from atmospheric oxidation.

Such spikes act at a 20 fold lower voltage almost as well as the best and finest points made by mechanical means. Still better results are obtained if polonium or radium salts are added to the galvanic bath when forming the protective layer or coating. Such pins have low resistance at their points and have excellent collector action even at one volt or lower.

In **Fig.24**, the three unconnected poles are not connected with one another in parallel. That is quite possible in practice without altering the principle of the free pole. It is also preferable to interconnect a series of collecting aerials in parallel to a common collector network. **Fig.25** shows such an arrangement. **A^1, A^2, A^3, A^4** are four metal collector balloons with gold or platinum coated spikes which are electrolytically mad in the presence of polonium emanations or radium salts, the spikes being connected over four electromagnets **S^1, S^2, S^3, S^4**, through an annular conductor **R**. From this annular conductor, four wires run over four further electromagnets **S^a, S^b, S^c, S^d**, to the connecting point **13**. There, the conductor is divided, one branch passing over **12** and the safety spark gap **7** to the earth at **E^1**, the other over inductive resistance **J** and working spark gap **7** to the earth at

E^{2}. The working circuit, consisting of the capacitors **5** and **6** and a resonance motor or a capacitor motor **M**, such as already described, is connected in proximity around the sparking gap section **7**. Of course, instead of connecting the capacitor motor directly, the primary circuit for high frequency oscillatory current may also be inserted.

The capacitor sets are connected by one pole to the annular conductor **R** and can be either inductionless (**16** and **18**) or made as induction capacitors as shown by **21** and **23**. The free poles of the inductionless capacitors are indicated by **17** and **19**, and those of the induction capacitors by **22** and **24**. As may be seen from the drawings, all of these poles **17, 22, 19** and **24** may be interconnected in parallel through a second annular conductor without any fear that thereby the principle of the free pole connection will be lost. In addition to the advantages already mentioned, the parallel connection also allows an equalisation of the working voltage in the entire collector network. Suitably calculated and constructed induction coils **25** and **26** may also be inserted in the annular conductor of the free poles, by means of which, a circuit may be formed in the secondary coils **27** and **28** which allows current produced in this annular conductor by fluctuations of the charges, to be measured or otherwise utilised.

According to what has already been stated, separate collector balloons may be connected at equidistant stations distributed over the whole country, either connected directly with one another metallically or by means of intermediate suitably connected capacitor sets through high voltage conductors insulated from earth. The static electricity is converted through a spark gap, into high frequency dynamic electricity which may be utilised as a source of energy by means of a suitable connection method, various precautions being observed, and with special regulations. The wires leading from the collector balloons, have up to now been connected through an annular conductor without this endless connection, which can be regarded as an endless induction coil, being able to exert any action on the whole conductor system.

It has now been found that if the network conductor connecting the aerial collector balloons with one another, is not made as a simple annular conductor, but preferably short-circuited in the form of coils over a capacitor set or spark gap or through thermionic valves, then the total collecting network exhibits quite new properties. The collection of atmospheric electricity is thereby not only increased but an alternating field may easily be produced in the collector network. Further, the atmospheric electrical forces showing themselves in the higher regions, may also be obtained directly by induction. In **Fig.26** and **Fig.28**, a form of construction is shown, on the basis of which, the further foundations of the method will be explained in more detail.

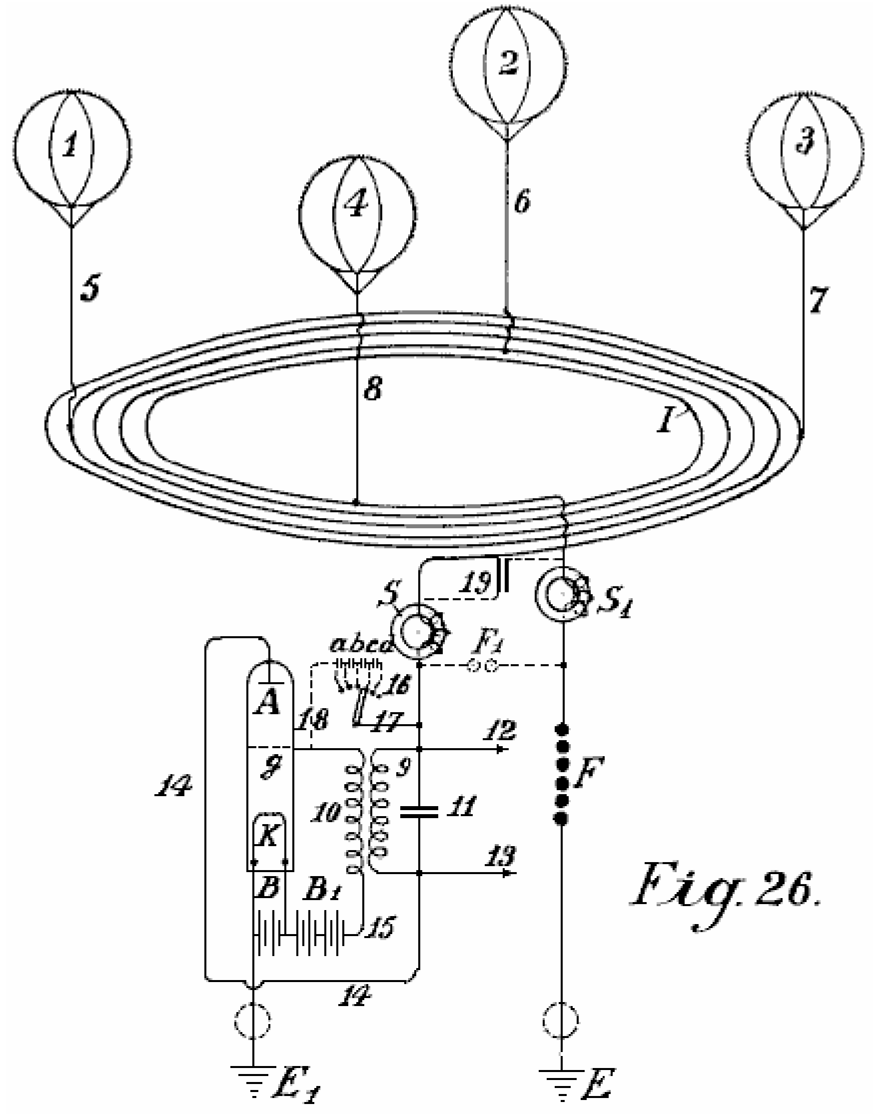

Fig. 26.

In **Fig.26, 1,2,3** and **4** are metallic collector balloons, with **5, 6, 7** and **8** their metallic aerial conductors and **I** the actual collector network. This consists of five coils and is mounted on high voltage insulators in the air, on high voltage masts (or with a suitable construction of cable, embedded in the earth). One coil has a diameter of 1 to 100 km. or more. **S** and **S^1** are two protective electromagnets, **F** is the second safety section against excess voltage, **E** its earth conductor and **E^1** the earth conductor of the working section. When an absorption of static atmospheric electricity is effected through the four balloon collectors, in order to reach the earth connection **E^1**, the current must flow spirally through the collector network, over the electromagnet **S**, primary induction coil **9**, conductor **14**, anode **A** of the audion tube, incandescent cathode **K**, as the way over the electromagnet and safety spark gap **F** offers considerably greater resistance. Owing to the fact that the accumulated current flows in one direction, an electromagnetic alternating field is produced in the interior of the collector network coil, whereby all of the free electrons are directed more or less into the interior of the coil. An increased ionisation of the atmosphere is therefore produced. Consequently, the points mounted on the collector balloon, show a considerably reduced resistance and therefore increased static charges are produced between the points on the balloon and the surrounding atmosphere. This results in a considerably increased collector effect.

A second effect, which could not be achieved in any other way, is obtained by the alternating electromagnetic field running parallel to the earth's surface, which acts more or less with a diminishing or increasing effect on the earth's magnetic field, whereby in the case of fluctuations in the current, a return induction current of reversed sign is always produced in the collector coil by earth magnetism. Now if a constantly pulsating, continuous alternating field is produced as stated in the collector network **I**, an alternating current of the same frequency is also produced in the collecting network coil. As the same alternating field is further transmitted to the aerial balloon, the resistance of its points is thereby considerably reduced, while the collector action is considerably increased. A further advantage is that positive charges which collect on the metal surfaces during the conversion into dynamic current, produce a so-called voltage drop in the collector area. As an alternating field is present, when discharge of the collector surfaces takes place, the negative ions surrounding the collector surfaces produce, by the law of induction, an induction of reversed sign on the collector surface - that is, a positive charge. In addition to the advantages already stated, the construction of connecting conductors in coil form, when of sufficiently large diameter, allows a utilisation of energy arising in higher regions, also in the most simple way. As is well known, electric discharges frequently take place at very great elevations which may be observed, such as 'St. Elmo's fires' or 'northern lights'. These energy quantities have not been able to have been utilised before now. By this invention, all of these kinds of energy, as they are of electromagnetic nature and since the axis of the collector coils is at right angles to the earth's surface, can be absorbed in the same way as a radio absorbs distant radio signals. With a large diameter of the spiral, it is possible to connect large surfaces and thereby take up large quantities of energy.

It is well known that in the summer months and in the tropics, large radio stations are very frequently unable to receive signals due to interruptions caused by atmospheric electricity, and this takes place with vertical coils of only 40 to 100 metres in diameter. If, on the contrary, horizontal coils of 1 to 100 kilometres in diameter are used, very strong currents may be obtained through discharges which are constantly taking place in the atmosphere. Particularly in the tropics, or still better in the polar regions where the northern lights are constantly present, large quantities of energy may probably be obtained in this way. A coil with several windings should perform the best. In a similar manner, any alteration of the earth's magnetic field should act inductively on such a coil.

It is not at all unlikely that earthquakes and sunspots will also produce an induction in collector coils of that size. In similar manner, this collector conductor will react to earth currents more particularly when they are near the surface of the earth or even embedded in the earth. By combining the previous kind of current collectors, so far as they are adapted for the improved system with the improved possibilities of obtaining current, the quantities of free natural energy which are to be obtained in the form of electricity are considerably increased.

In order to produce uniform undamped current oscillations in the improved collector coil, so-called audion high vacuum or thermionic valves are used instead of the previous described spark gaps (**Fig.26, 9-18**). The main aerial current flows through electromagnet **S** (which in the case of a high number of alternations is not connected here but in the earth conductor $\mathbf{E^1}$) and may be conveyed over the primary coils in the induction winding through wire **14** to the anode **A** of the high vacuum grid valve. Parallel with the induction resistance **9**, a regulating capacity of suitable size, such as capacitor **11**, is inserted. In the lower part of the vacuum grid valve is the incandescent filament cathode **K** which is fed through a battery **B**. From the battery, two branches run, one to the earth conductor $\mathbf{E^1}$ and the other through battery $\mathbf{B^1}$ and secondary coil **10** to the grid anode **g** of the vacuum tube. By the method of connections shown in dotted lines, a desired voltage may also be produced at the grid electrode **g** through wire **17** which is branched off from the main current conductor through switches **16** and some small capacitors (**a, b, c, d**) connected in series, and conductor **18**, without the battery $\mathbf{B^1}$ being required. The action of the whole system is somewhat as follows:-

On the connecting conductor of the aerial collector network being short-circuited to earth, the capacitor pole **11** is charged, and slightly dampened oscillations are formed in the short-circuited oscillation circuit formed by capacitor **11** and self inductance **9**. Because of the coupling through coil **10**, voltage fluctuations of the same frequency take place in the grid circuit **15** and in turn, these fluctuations influence the strength of the electrode current passing through the high vacuum amplifying valve and thus produce current fluctuations of the same frequency in the anode circuit. A permanent supply of energy. Consequently, a permanent supply of energy is supplied to the oscillation circuits **9** and **10** takes place, until a balance is achieved where the oscillation energy consumed exactly matches the energy absorbed. This produces constant undamped oscillations in the oscillation circuits **9 - 11**.

For regular working of such oscillation producers, high vacuum strengthening tubes are necessary and it is also necessary that the grid and anode voltages shall have a phase difference of 180^0 so that if the grid is negatively charged, then the anode is positively charged and vice versa. This necessary difference of phase may be obtained by most varied connections, for example, by placing the oscillating circuit in the grid circuit or by separating the oscillation circuit and inductive coupling from the anodes and the grid circuit, and so forth.

A second important factor is that care must be taken that the grid and anode voltages have a certain relation to one another; the latter may be obtained by altering the coupling and a suitable selection of the self induction in the grid circuit, or as shown by the dotted lines **18, 17, 16** by means of a larger or smaller number of capacitors of suitable size connected in series; in this case, the battery $\mathbf{B^1}$ may be omitted. With a suitable selection of the grid potential, a glow discharge takes place between the grid **g** and the anode **A**, and accordingly at the grid there is a cathode drop and a dark space is formed. The size of this cathode drop is influenced by the ions which are emitted in the lower space in consequence of shock ionisation of the incandescent cathodes **K** and pass through the grid in the upper space. On the other hand, the number of the ions passing through the grid is dependent on the voltage between the grid and the cathode. Thus, if the grid voltage undergoes periodic fluctuations (as in the present case), the amount of the cathode drop at the grid fluctuates, and consequently, the internal resistance of the valve fluctuates correspondingly, so that when a back-coupling of the feed circuit with the grid circuit takes place, the necessary means are in place for producing undamped oscillations and of taking current as required, from the collecting conductor.

With a suitably loose coupling, the frequency of the undamped oscillations produced is equal to the self-frequency of the oscillation circuits **9** and **10**. By selecting a suitable self-induction for coil **9** and capacitor **11**, it is possible to extend operation from frequencies which produce electromagnetic oscillations with a wavelength of only a few metres, down to the lowest practical alternating current frequency. For large installations, a suitable number of frequency producing tubes in the form of the well known high vacuum transmission tubes of 0.5 kW to 2 kW in size may be connected in parallel so that in this respect, no difficulty exists.

The use of such tubes for producing undamped oscillations, and the construction and method of inserting such transmission tubes in an accumulator or dynamo circuit is known, also, such oscillation producing tubes only work well at voltages of 1,000 volts up to 4,000 volts, so that on the contrary, their use at lower voltages is considerably more difficult. By the use of high voltage static electricity, this method of producing undamped oscillations as compared with that through spark gaps, must be regarded as an ideal solution, particularly for small installations with outputs from 1 kW to 100 kW.

By the application of safety spark gaps, with interpolation of electromagnets, not only is short-circuiting avoided but also the taking up of current is regulated. Oscillation producers inserted in the above way, form a constantly acting alternating electromagnetic field in the collector coil, whereby, as already stated, a considerable accumulating effect takes place. The withdrawal or 'working' wire is connected at **12** and **13**, but current may be taken by means of a secondary coil which is firmly or moveably mounted in any suitable way inside the large collector coil, i.e. in its alternating electromagnetic field, so long as the direction of its axis is parallel to that of the main current collecting coil.

In producing undamped oscillations of a high frequency (50 KHz and more) in the oscillation circuits **9** and **11**, electromagnets **S** and **S^1** must be inserted if the high frequency oscillations are not to penetrate the collector coil, between the oscillation producers and the collector coil. In all other cases they are connected shortly before the earthing (as in **Fig.27** and **Fig.28**).

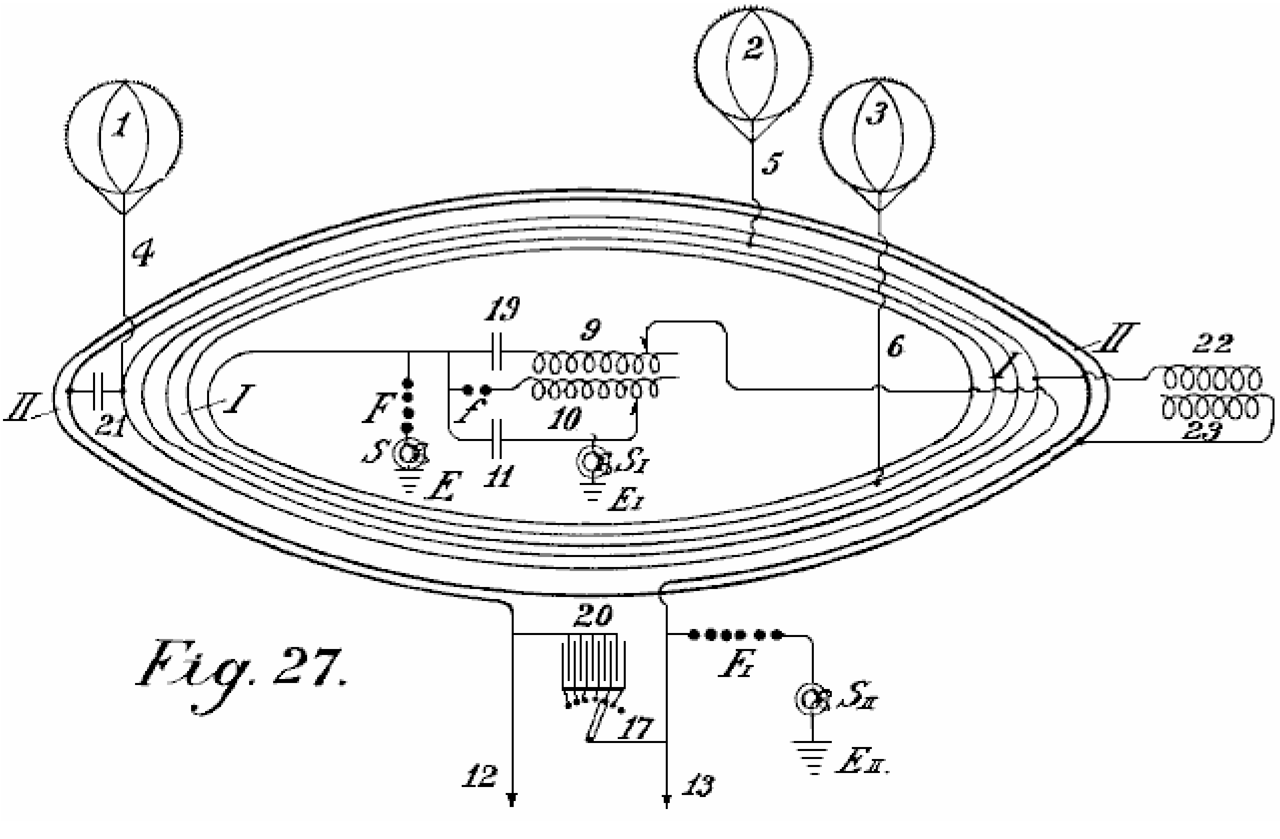

Fig. 27.

In **Fig.27** a second method of construction of the connecting conductor of the balloon aerials is illustrated in the form of a coil. The main difference is that in addition to the connecting conductor **I** another annular conductor **II** is inserted parallel to the former on the high voltage masts in the air (or embedded as a cable in the earth) but both in the form of a coil. The connecting wire of the balloon aerials is both a primary conductor and a current producing network while the coil is the consumption network and is not in unipolar connection with the current producing network.

In **Fig.27** the current producing network **I** is shown with three balloon collectors **1, 2, 3** and aerial conductors **4, 5, 6**; it is short-circuited through capacitor **19** and inductor **9**. The oscillation forming circuit consists of spark gap **f**, inductor **10** and capacitor **11**. The earth wire **E** is connected to earth through electromagnet $\mathbf{S^1}$. $\mathbf{F_I}$ is the safety spark gap which is also connected to earth through a second electromagnet $\mathbf{S_{II}}$ at $\mathbf{E_{II}}$. On connecting up the capacitor circuit **11** it is charged over the spark gap **f** and an oscillatory discharge is formed. This discharging current acts through inductor **10** on the inductively coupled secondary **9**, which causes a change in the producing network, by modifying the voltage on capacitor **19**. This causes oscillations in the coil-shaped producer network. These oscillations induce a current in the secondary circuit **II**, which has a smaller number of windings and lower resistance, consequently, this produces a lower voltage and higher current in it.

In order to convert the current thus obtained, into current of an undamped character, and to tune its wavelengths, a sufficiently large regulatable capacitor **20** is inserted between the ends **12** and **13** of the secondary conductor **II**. Here also, current may be taken without an earth conductor, but it is advisable to insert a safety spark gap $\mathbf{E^1}$ and to connect this with the earth via electromagnet $\mathbf{S^2}$. The producer network may be connected with the working network **II** over an inductionless capacitor **21** or over an induction capacitor **22, 23**. In this case, the secondary conductor is unipolarly connected with the energy conductor.

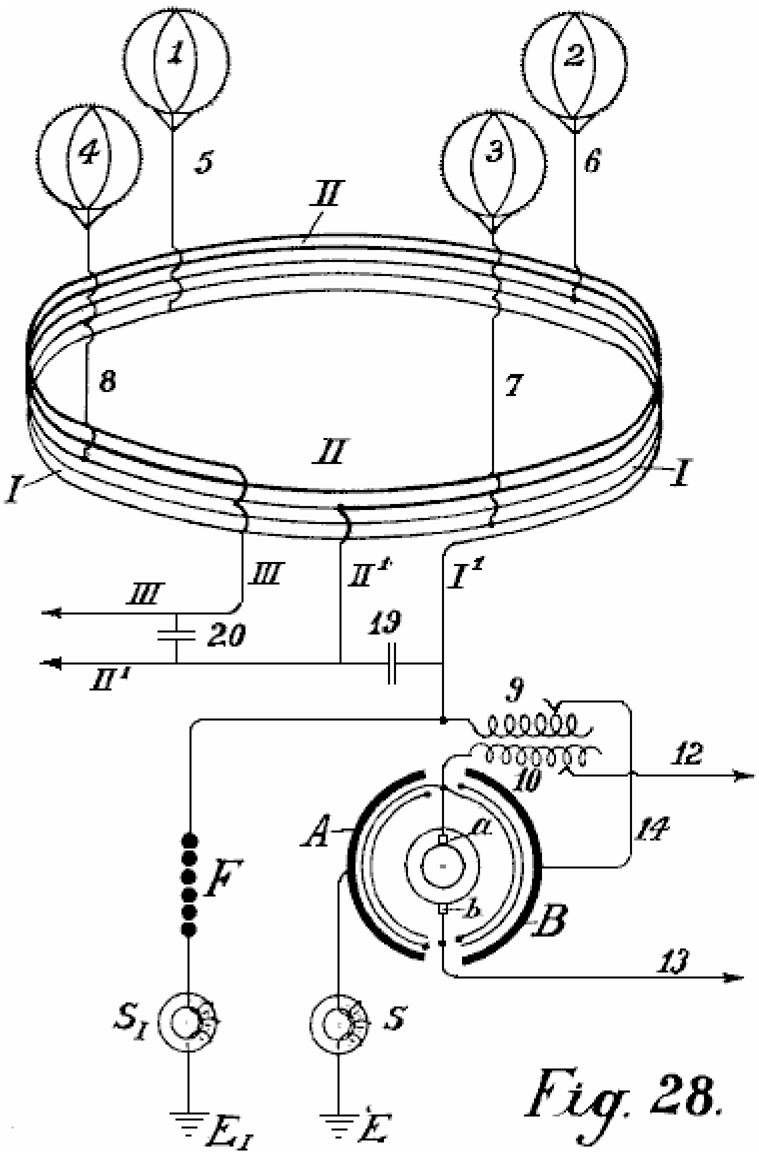

Fig. 28.

In **Fig.28**, the connecting conductor between the separate collecting balloons is carried out according to the autotransformer principle. The collecting coil connects four aerial balloons **1, 2, 3, 4**, the windings of which are not made side-by-side but one above the other. In **Fig.28**, the collector coil **I** is shown with a thin line and the metallically connected prolongation coils **II** with a thick line. Between the ends $\mathbf{I^1}$ and $\mathbf{II^1}$ of the energy network **I**, a regulating capacitor **19** is inserted. The wire $\mathbf{I^1}$ is connected with the output wire and with the spark gap **F**.

As transformer of the atmospheric electricity, an arrangement is employed which consists of using rotary pairs of capacitors in which the stator surface **B** is connected with the main current, while the other **A** is connected to the earth pole. These pairs of short-circuited capacitors are caused to rotate and the converted current can be taken from them via two collector rings and brushes. This current is alternating current with a frequency dependent on the number of balloons and the rate of revolutions of the rotor. As the alternating current formed in the rotor can act through coils **10** on the inductor **9**, an increase or decrease of the feed current in **I** can be obtained according to the direction of the current by back-induction. Current oscillations of uniform rhythm are produced in the coil-shaped windings of the producer network.

As the ends of this conductor are short-circuited through the regulatable capacitor **19**, these rhythms produce short-circuited undamped oscillations in the energy conductor. The frequency of these oscillations can be altered at will by adjusting the capacitance of capacitor **19**. These currents may also be used as working current via the conductors **II**$^{\mathbf{1}}$ and **III**. By inserting capacitor **20**, a connection between these conductors may also be made, whereby harmonic oscillations of desired wavelength are formed. By this means, quite new effects as regards current distribution are obtained. The withdrawal of current can even take place without direct wire connection if, at a suitable point in the interior of the producing network (quite immaterially whether this has a diameter of 1 or 100 km) a coil tuned to these wavelength and of the desired capacity, is firmly or moveably mounted in the aerial conductor in such a way that its axis is parallel with the axis of the collector coil. In this case, a current is induced in the producing network, the size of which is dependent on the total capacity and resistance and on the frequency selected. A future possibility is taking energy from the producer network by radio signals as in addition to atmospheric electricity, magnetic earth currents and energy from the upper atmosphere may be tapped.

Of course, vacuum tubes may be used to produce undamped oscillations anywhere spark gaps are shown in the circuits. The separate large-diameter coils of the producer network may be connected to one another through separate conductors all in parallel or all in series or in groups in series. By regulating the number of oscillations and the magnitude of the voltage, more or fewer large collector coils of this kind may be used. The coils may also be divided spirally over the entire section. The coils may be carried out in annular form or in triangular, quadrangular, hexagonal or octagonal form.

Of course, wires which form guides for the current waves, may be carried from a suitable place to the centre or also laterally. This is necessary when the currents have to be conducted over mountains and valleys and so forth. In all these cases, the current must be converted into a current of suitable frequency.

As already mentioned, separate collecting balloons may be directly metallically interconnected a equidistant stations distributed over the entire country, or may be connected by interpolation of suitable capacitor sets by means of high voltage conductors. The static electricity is converted through a spark gap into dynamic energy of high frequency and could then in that form be used as an energy source after special regulation.

According to this invention, in order to increase the collecting effect of the balloon in the aerial collector conductor or in the earth wire, radiating collectors are used. These consist of either incandescent metal or oxide electrodes in the form of vacuum grid valves, or electric arcs (mercury or similar electrodes), Nernst lamps, or flames of various kinds maybe simply connected with the respective conductor.

It is well known that energy can be drawn off from a cathode consisting of an incandescent body opposite an anode charged with positive electricity (vacuum grid tube). Hitherto however, a cathode was always first directly placed opposite an anode, and secondly, the system always consisted of a closed circuit.

Now if we dispense with the ordinary ideas in forming light or flame arcs in which a cathode must always stand directly opposite an anode charged to a high voltage or another body freely floating in the air, or consider the incandescent cathode to be only a source of unipolar discharge, (which represents group and point discharges in electro-static machines similar to unipolar discharges), it may be ascertained that incandescent cathodes and less perfectly, all incandescent radiators, flames and the like, have relatively large current densities and allow large quantities of electric energy to radiate into open space in the form of electron streams as transmitters.

The object of this invention is as described below, if such incandescent oxide electrodes or other incandescent radiators or flames are not freely suspended in space but instead are connected metallically with the earth so that they can be charged with negative terrestrial electricity, these radiators possess the property of absorbing the free positive electrical charges contained in the air space surrounding them (that is to say, of collecting them and conducting them to earth). They can therefore serve as collectors and have in comparison to the action of the spikes, a very large radius of action R; the effective capacity of these collectors is much greater than the geometrical capacity (R_0) calculated in an electro-static sense.

As is well known, our earth is surrounded with an electro-static field and the difference of potential dV/dh of the earth field according to the latest investigations, is in summer about 60 to 100 volts, and in winter, 300 to 500 volts per metre difference in height, a simple calculation gives the result that when such a radiation collector or flame collector is arranged, for example, on the ground, and a second one is mounted vertically over it at a distance of 2,000 metres and both are connected by a conducting cable, there is a voltage difference in summer of about 2,000,000 volts and in winter 6,000,000 volts or more.

According to Stefan Boltzmann's law of radiation, the quantity of energy which an incandescent surface (temperature T) of 1 sq. cm. radiates in a unit of time into the open air (temperature T_0) is expressed by the following formula:

$$S = R\,(T^4 - T_0^4) \text{ watts per square centimetre}$$

and the universal radiation constant R, according to the latest researches of Ferry, is equal to 6.30×10^{-12} watts per square centimetre.

Now, if an incandescent surface of 1 sq. cm., as compared to the surrounding space, shows a periodic fall of potential dV, it radiates (independent of the direction of the current) in accordance with the above formula, for example at a temperature of 3715^0 C. an energy of 1.6 kW per square centimetre. As for the radiation, the same value can be calculated for the collection of energy, but reversed. Now, as carbon electrodes at the temperature of the electric arc, support a current density up to 60 to 65 amps per sq. cm., no difficulties will result in this direction in employing radiating collectors as accumulators.

If the earth be regarded as a cosmically insulated capacitor in the sense of geometrical electro-statics *x*, according to Chwolson, there results from the geometric capacity of the earth:

For negative charging 1.3×10^6 Coulomb For negative potential $V = 10 \times 10^8$ volts.

It follows from this that EJT is approximately equal to 24.7×10^{24} watts/sec. Now if it is desired to make a theoretical short circuit through an earthed flame collector, this would represent an electrical total work of about $79{,}500 \times 10^{10}$ kilowatt years. As the earth must be regarded as a rotating mechanism which is thermo-dynamically, electromagnetically and kinematically coupled with the sun and star system by cosmic radiation and gravitation, a reduction in the electric energy of the earth field is not to be feared. The energies which the incandescent collectors could withdraw from the earth field can only cause a lowering of the earth temperature. This is however, not the case as the earth does not represent a cosmically entirely insulated system. On the contrary, there is conveyed from the sun to the earth an energy of $18{,}500 \times 10^{10}$ kilowatts. Accordingly, any lowering of the earth temperature without a simultaneous lowering of the sun's temperature would contradict Stefan Boltzmann's law of radiation.

From this it must be concluded that if the earth temperature sinks, the total radiation absorbed by the earth increases, and further, the rate of cooling of the earth is directly dependent on that of the sun and the other radiators cosmically coupled with the sun.

The incandescent radiation collectors may, according to this invention, be used for collecting atmospheric electricity if they (1) are charged with the negative earth electricity (that is to say, when they are directly connected to the earth by means of a metallic conductor) and (2) if large capacities (metal surfaces) charged with electricity are mounted opposite them as positive poles in the air. This is regarded as the main feature of the present invention as without these inventive ideas it would not be possible to collect with an incandescent collector, sufficiently large quantities of the electrical charges contained in the atmosphere as technology requires; the radius of action of the flame collectors would also be too small, especially if it be considered that the very small surface density does not allow of large quantities of charge being absorbed from the atmosphere.

It has already been proposed to employ flame collectors for collecting atmospheric electricity and it is known that their collecting effect is substantially greater opposite the points. It is however, not known that the quantities of current which hitherto be obtained are too small for technical purposes. According to my experiments, the reason for this is to be found in the inadequate capacities of the collector conductor poles. If such flame or radiating collectors have no or only small positive surfaces, their radius of action for large technical purposes is too small. If the incandescent collectors be constantly kept in movement in the air, they may collect more according to the speed of the movement, but this is again not capable of being carried out in practice.

By this invention, the collector effect is considerably increased by a body charged with a positive potential and of the best possible capacity, being also held floating (without direct earth connection) opposite such an incandescent collector which is held floating in the air at a desired height. If, for example, a collecting balloon of sheet metal or metallised fabric, be caused to mount to 300 to 3,000 metres in the air, and as a positive pole it is brought opposite such a radiating collector connected by a conductor to earth, quite different results are obtained.

The metallic balloon shell which has a large surface area is charged to a high potential by atmospheric electricity. This potential is greater the higher the collecting balloon is above the incandescent collector. The positive electricity acts concentratedly on the anode floating in the air as it is attracted through the radiation shock ionisation, proceeding from the incandescent cathode. The consequence of this is that the radius of action of the incandescent cathode collector is considerably increased and so is the collecting effect of the balloon surface. Further, the large capacity of the anode floating in the air, plays therefore an important part because it allows the collection of large charges resulting in a more uniform current even when there is substantial current withdrawal - this cannot be the case with small surfaces.

In the present case, the metallic collecting balloon is a positive anode floating in the air and the end of the earth conductor of this balloon serves as positive pole surface opposite the surface of the radiating incandescent cathode, which in turn is charged with negative earth electricity as it is connected to the earth by a conductor. The process may be carried out by two such contacts (negative incandescent cathode and anode end of a capacity floating in the air) a capacitor and an inductive resistance being switched on in parallel, whereby simultaneously undamped oscillations may be formed.

In very large installations it is advisable to connect two such radiating collectors in series. Thus an arc light incandescent cathode may be placed below on the open ground and an incandescent cathode which is heated by special electro-magnetic currents, be located high in the air. Of course for this, the special vacuum Liebig tubes with or without grids may also be used. An ordinary arc lamp with oxide electrodes may be introduced on the ground and the positive pole is not directly connected with the collecting balloon, but through the upper incandescent cathode or over a capacitor. The method of connecting the incandescent cathode floating in the air may be seen in **Figs.29-33**.

B is the air balloon, **K** a Cardan ring (connection with the hawser) **C** the balloon, **L** a good conducting cable, **P** a positive pole, **N** negative incandescent cathode and **E** the earth conductor.

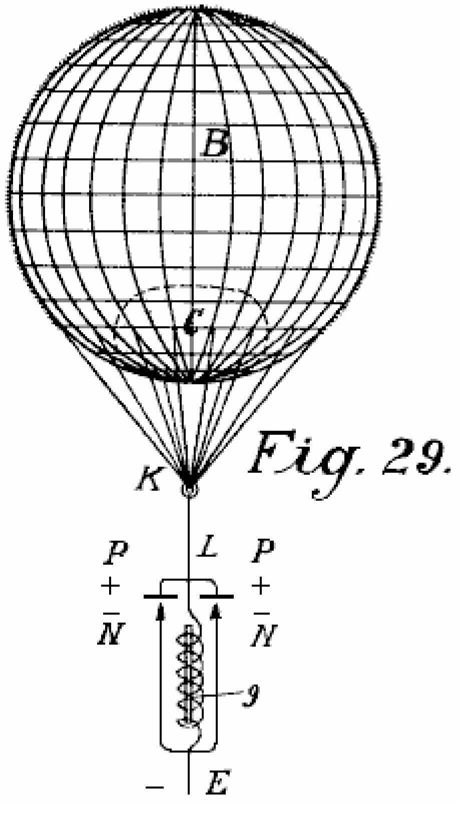

Fig.29 represents the simplest form of construction. If electric oscillations are produced below on the ground by means of a carbon arc lamp or in any other suitable way, a considerably greater electric resistance is opposed to that in the direct way by inserting an electrical inductive resistance **9**. Consequently, between **P** and **N**, a voltage is formed, and as, over **N** and **P** only an inductionless ohmic resistance is present, a spark will spring over so long as the separate induction coefficients and the like are correctly calculated. The consequence of this is that the oxide electrode (carbon or the like) is rendered incandescent and then shows as incandescent cathode, an increased collecting effect. The positive poles must be substantially larger than the negative in order that they may not also become incandescent. As they are further connected with the large balloon area which has a large capacity and is charged at high voltage, an incandescent body which is held floating in the air and a positive pole which can collect large capacities is thereby obtained in the simplest way. The incandescent cathode is first

caused to become incandescent by means of separate energy produced on the earth, and then maintained by the energy collected from the atmosphere.

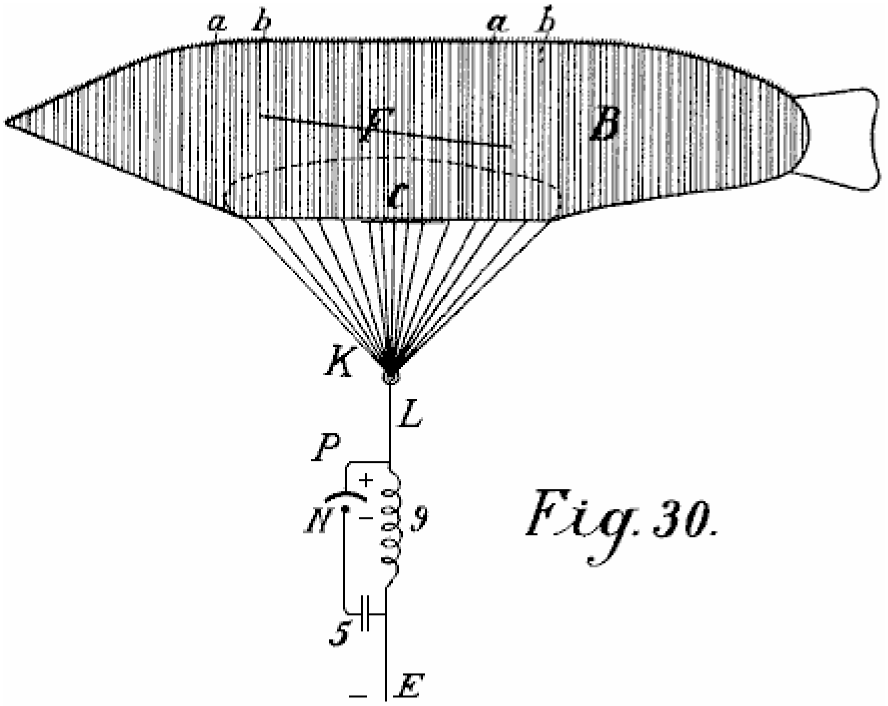

Fig. 30.

Fig.30 only shows the difference that instead of a round balloon, a cigar-shaped one may be used, also, a capacitor **5** is inserted between the incandescent cathode and the earth conductor so that a short-circuited oscillation circuit over **P N 5** and **9** is obtained. This has the advantage that quite small quantities of electricity cause the cathode to become incandescent and much larger cathode bodies may be made incandescent.

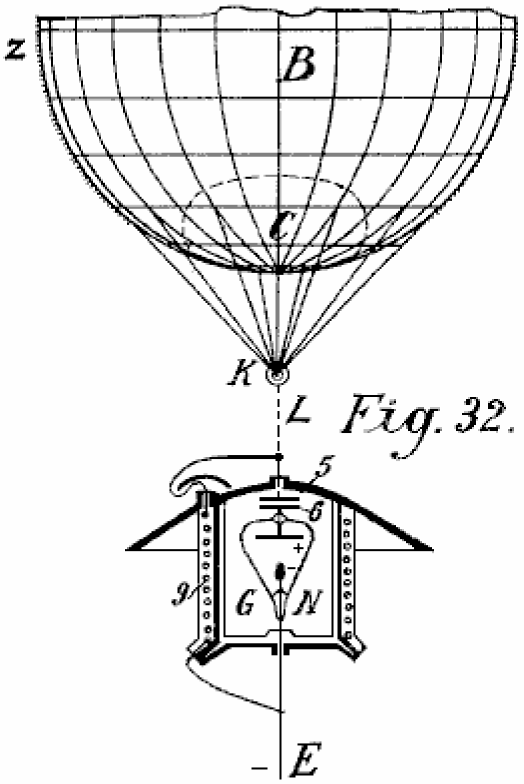

Fig. 32.

In this form of construction, both the incandescent cathode and the positive electrode may be enclosed in a vacuum chamber as shown in **Fig.32**. A cable **L** is carried well insulated through the cover of a vessel and ends in a capacitor disc **5**. The cover is arched in order to keep the rain off. The vessel is entirely or partially made of magnetic metal and well insulated inside and outside. Opposite disc **5** another disc **6** and on this again a metallic positive pole of the vacuum tube **g** with the incandescent cathode (oxide electrode) **N** is arranged. The negative electrode is on the one hand connected to the earth conductor **E**, and on the other hand with the inductive resistance **9** which is also connected with the cable **L** with the positive pole and wound around the vessel in coils.

The action is exactly the same as that in **Fig.29** only instead of an open incandescent cathode, one enclosed in vacuo is used. As in such collectors, only small bodies be brought to incandescence, in large installations a plurality of such vacuum tubes must be inserted in proximity to one another. According to the previous constructions **Fig.31** and **Fig.33** are quite self evident without further explanations.

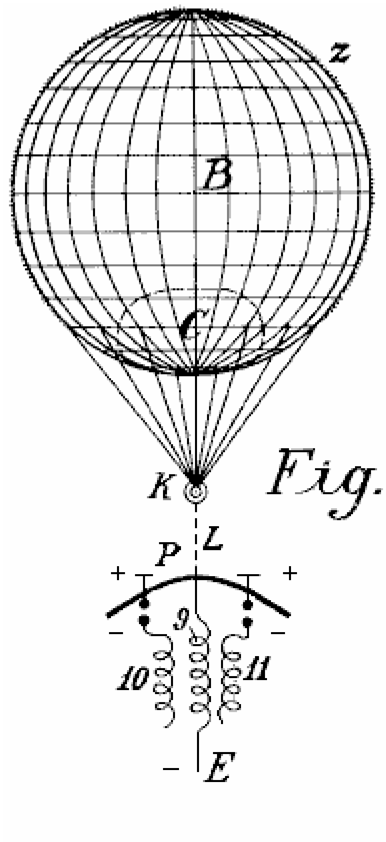

Fig.31.

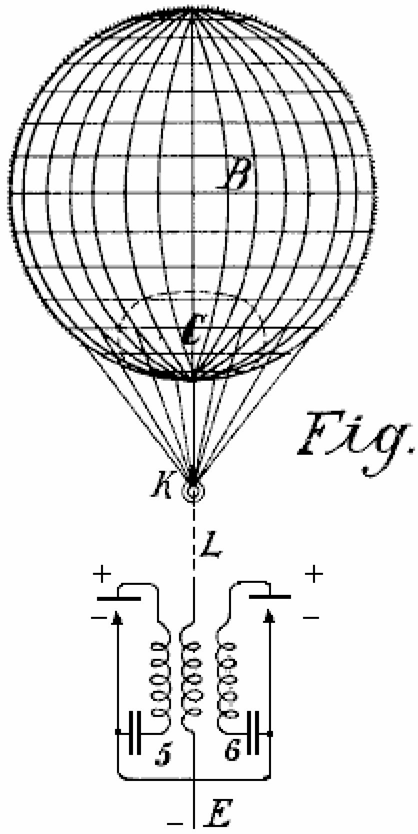

Fig.33.

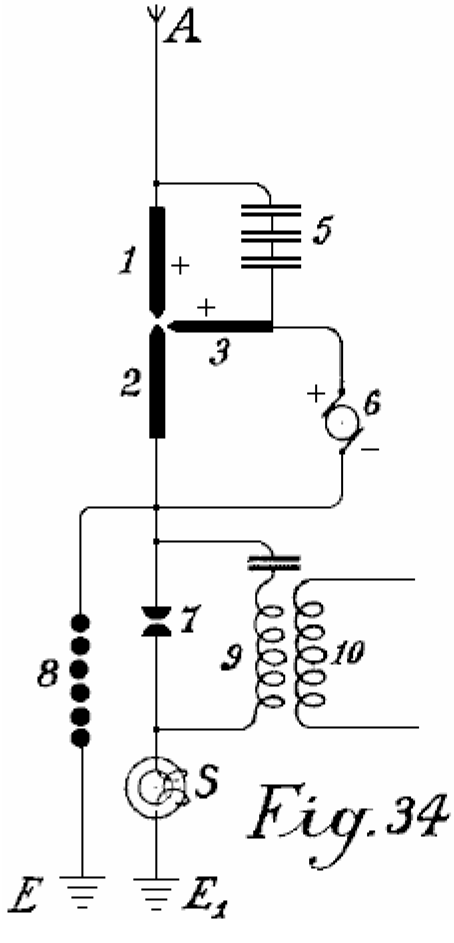

Fig.34

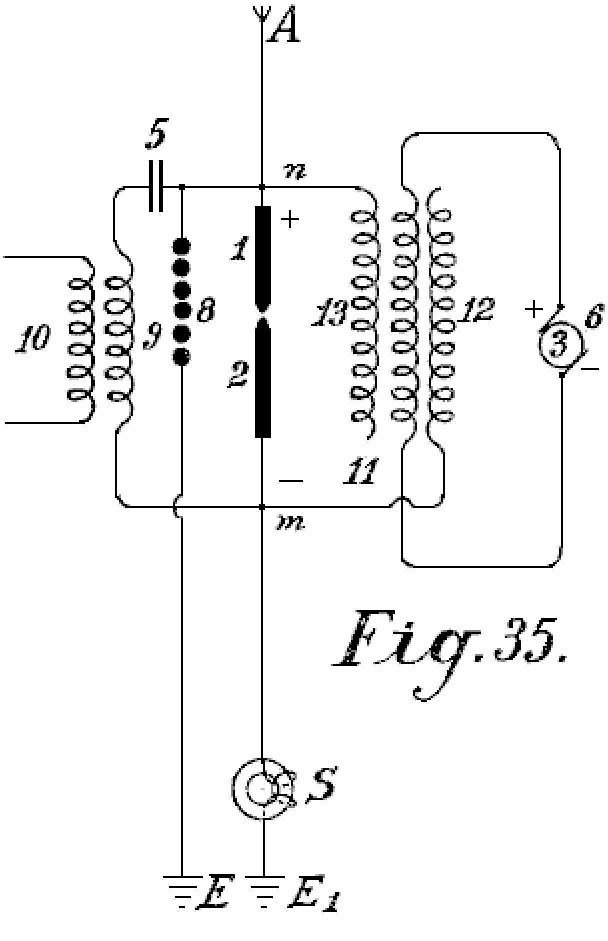

Fig.35.

Figs.34-37 represent further diagrams of connections over radiating and flame collectors, and in fact, how they are to be arranged on the ground. **Fig.34** shows an arc light collector with oxide electrodes for direct current and its connection. **Fig.35** shows a similar one for alternating current. **Fig.36** an incandescent collector with a Nernst lamp and **Fig.37** a similar one with a gas flame.

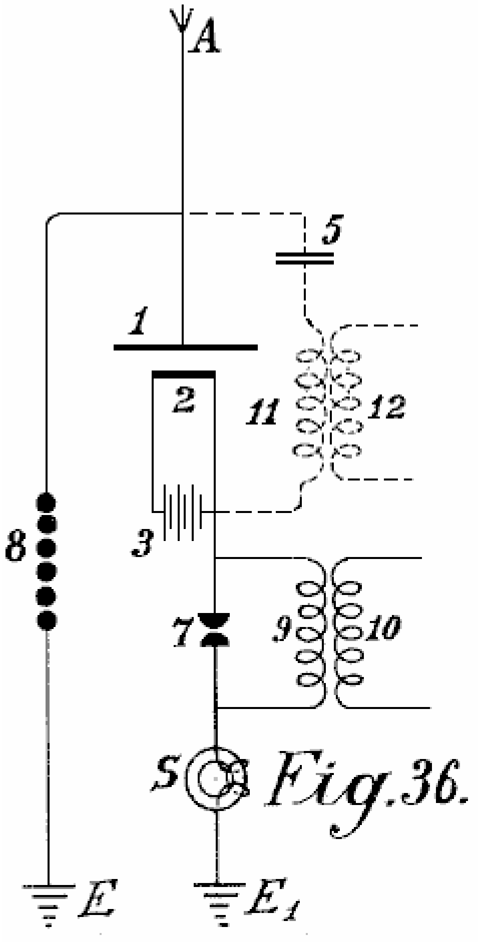

Fig.36.

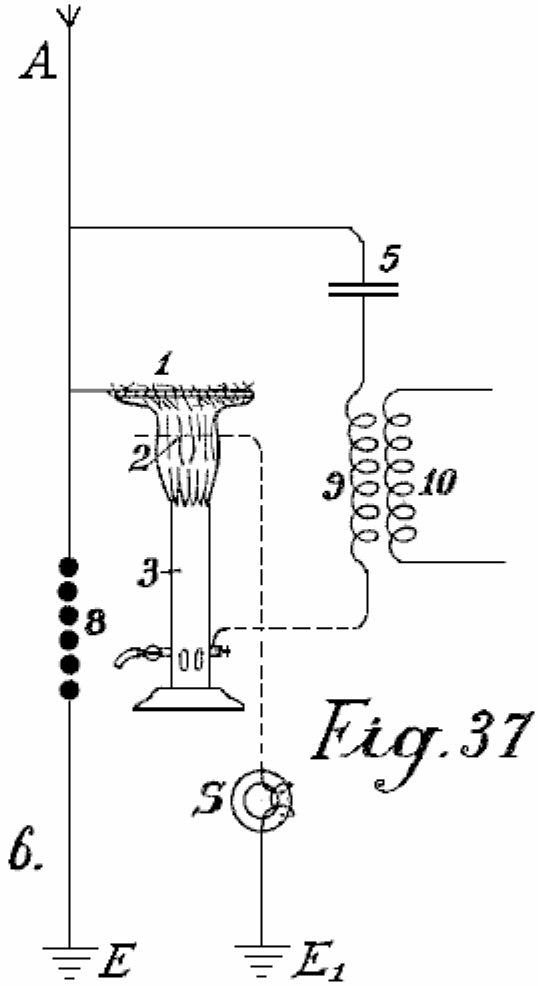

Fig.37

The positive pole **1** of the radiating collectors is always directly connected to the aerial collecting conductor **A**. In **Fig.34**, this is further connected over the capacitor set **5** with a second positive electrode **3**. The direct current dynamo **b** produces current which flows over between the electrodes **3** and **2** as an arc light. On the formation of an arc, the negative incandescent electrode **2** absorbs electricity from the positive poles standing opposite it and highly charged with atmospheric electricity which it conveys to the working circuit. The spark gap 7, inductive resistance **9** and induction coil **10** are like the ones previously described. The protective electromagnet **S** protects the installation from earth circuiting and the safety spark gap **8** from excess voltage or overcharging.

In **Fig.35**, the connection is so far altered that the alternating current dynamo feeds the excitation coil **11** of the induction capacitor. **12** is its negative and **13** its positive pole. If the coil **3** on the magnet core of the dynamo is correctly calculated and the frequency of the alternating current sufficiently high, then an arc light can be formed between poles **1** and **2**. As the cathode **2** is connected to the negatively charged earth, and therefore always acts as a negative pole, a form of rectification of the alternating current produced by the dynamo **3** is obtained, since the second half of the period is always suppressed. The working circuit may be carried out in the same way as in **Fig.34**; the working spark gap **7** may however be dispensed with, and instead of it, between the points **n** and **m**, a capacitor **5** and an induction resistance **9** may be inserted, from which, a current is taken inductively.

Fig.36 represents a form of construction similar to that shown in **Fig.34** except that here instead of an arc lamp, a Nernst incandescent body is used. The Nernst lamp is fed through the battery **3**. The working section is connected with the negative pole, the safety spark gap with the positive poles. The working spark gap **7** may also be dispensed with and the current for it taken at **12** over the oscillation circuit **5, 11** (shown in dotted lines).

Flame collectors (**Fig.37**) may also be employed according to this invention. The wire network **1** is connected with the aerial collector conductor **A** and the burner with the earth. At the upper end of the burner, long points are provided which project into the flame. The positive electrode is connected with the negative over a capacitor **5** and the induction coil **9** with the earth.

The novelty in this invention is:

(1) The use of incandescent cathodes opposite positive poles which are connected to large metallic capacities as automatic collecting surfaces.
(2) The connection of the incandescent cathodes to the earth whereby, in addition to the electricity conveyed to them from the battery of machine which causes the incandescing, also the negative charge of the earth potential is conveyed, and
(3) The connection of the positive and negative poles of the radiating collectors over a capacitor circuit alone or with the introduction of a suitable inductive resistance, whereby simultaneously an oscillatory oscillation circuit may be obtained. The collecting effect is by these methods quite considerably increased.

ROY MEYERS

Patent GB1913,01098 14th January 1914 Inventor: Roy J. Meyers

APPARATUS FOR PRODUCING ELECTRICITY

ABSTRACT

A rectifier for use with apparatus for producing electricity from the earth consists of mercury- vapour lamps constructed and arranged as shown in **Fig.4**. Each lamp comprises two wires **6<1>, 7<1>** wound around a steel tube **15** surrounding a mercury tube **11** preferably of copper. The coil **6<1>** is connected between the electrode **14** and the terminal **18**, and the coil **7<1>** between the terminals **19, 5**. The coils **6<1>, 7<1>** are preferably composed of soft iron.

DESCRIPTION

This invention relates to improvements in apparatus for the production of electrical currents, and the primary object in view is the production of a commercially serviceable electrical current without the employment of mechanical or chemical action. To this end the invention comprises means for producing what I believe to be dynamic electricity from the earth and its ambient elements.

I am, of course aware that it has been proposed to obtain static charges from upper strata of the atmosphere, but such charges are recognised as of widely variant potential and have thus far proved of no practical commercial value, and the present invention is distinguished from all such apparatus as has heretofore been employed for attracting static charges by the fact that this improved apparatus is not designed or employed to produce or generate irregular, fluctuating or other electrical charges which lack constancy, but on the other hand I have by actual test been able to produce from a very small apparatus at comparatively low elevation, say about 50 or 60 feet above the earth's surface, a substantially constant current at a commercially usable voltage and amperage.

This current I ascertained by repeated tests is capable of being readily increased by additions of the unit elements in the apparatus described below, and I am convinced from the constancy of the current obtained and its comparatively low potential that the current is dynamic and not static, although, of course, it is not impossible that certain static discharges occur and, in fact, I have found occasion to provide against the damage which might result from such discharge by the provision of lightning arresters and cut-out apparatus which assist in rendering the obtained current stable by eliminating sudden fluctuations which sometimes occur during conditions of high humidity from what I consider static discharges.

The nature of my invention is obviously such that I have been unable to establish authoritatively all of the principles involved, and some of the theories herein expressed may possibly prove erroneous, but I do know and am able to demonstrate that the apparatus which I have discovered does produce, generate, or otherwise acquire a difference of potential representing a current amperage as stated above.

The invention comprises the means for producing electrical currents of serviceable potential substantially without the employment of mechanical or chemical action, and in this connection I have been able to observe no chemical action whatever on the parts utilised although deterioration may possibly occur in some of the parts, but so far as I am able to determine such deterioration does not add to the current supply but is merely incidental to the effect of climatic action.

The invention more specifically comprises the employment of a magnet or magnets and a co-operating element, such as zinc positioned adjacent to the magnet or magnets and connected in such manner and arranged relative to the earth so as to produce current, my observation being that current is produced only when such magnets have their poles facing substantially to the north and south and the zincs are disposed substantially along the magnets.

The invention also comprehends other details of construction, combinations and arrangements of parts as will be fully set forth.

<u>**DESCRIPTION OF THE DRAWINGS**</u>

Fig.1.

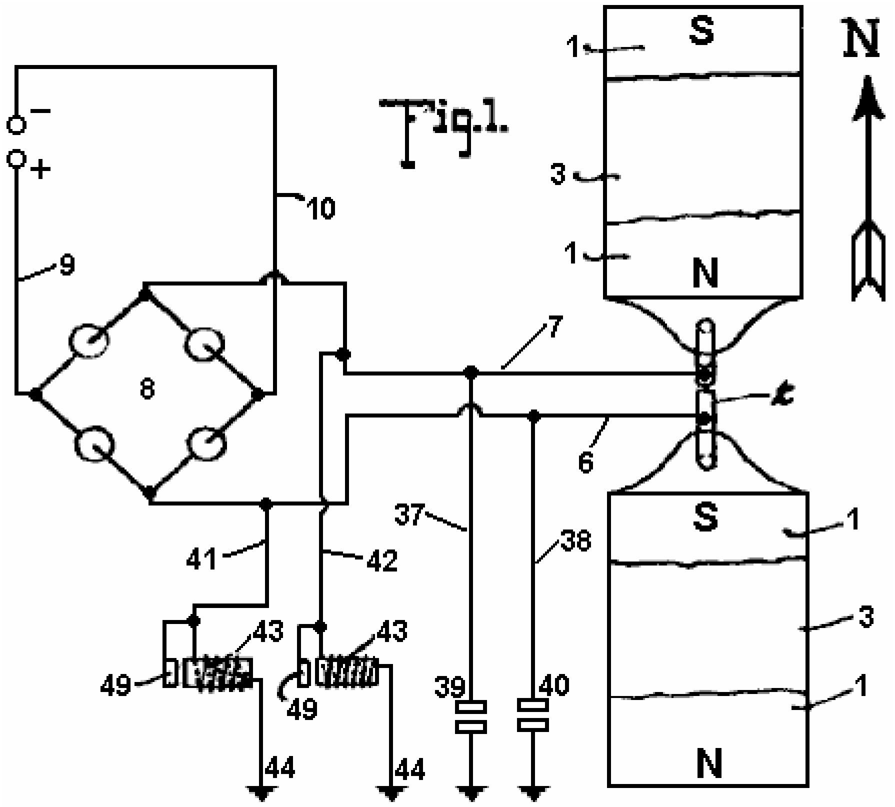

Fig.1 is a plan view of an apparatus embodying the features of the present invention, the arrow accompanying the figure indicating substantially the geographical north, parts of this figure are diagrammatic.

Fig.2. Fig.3.

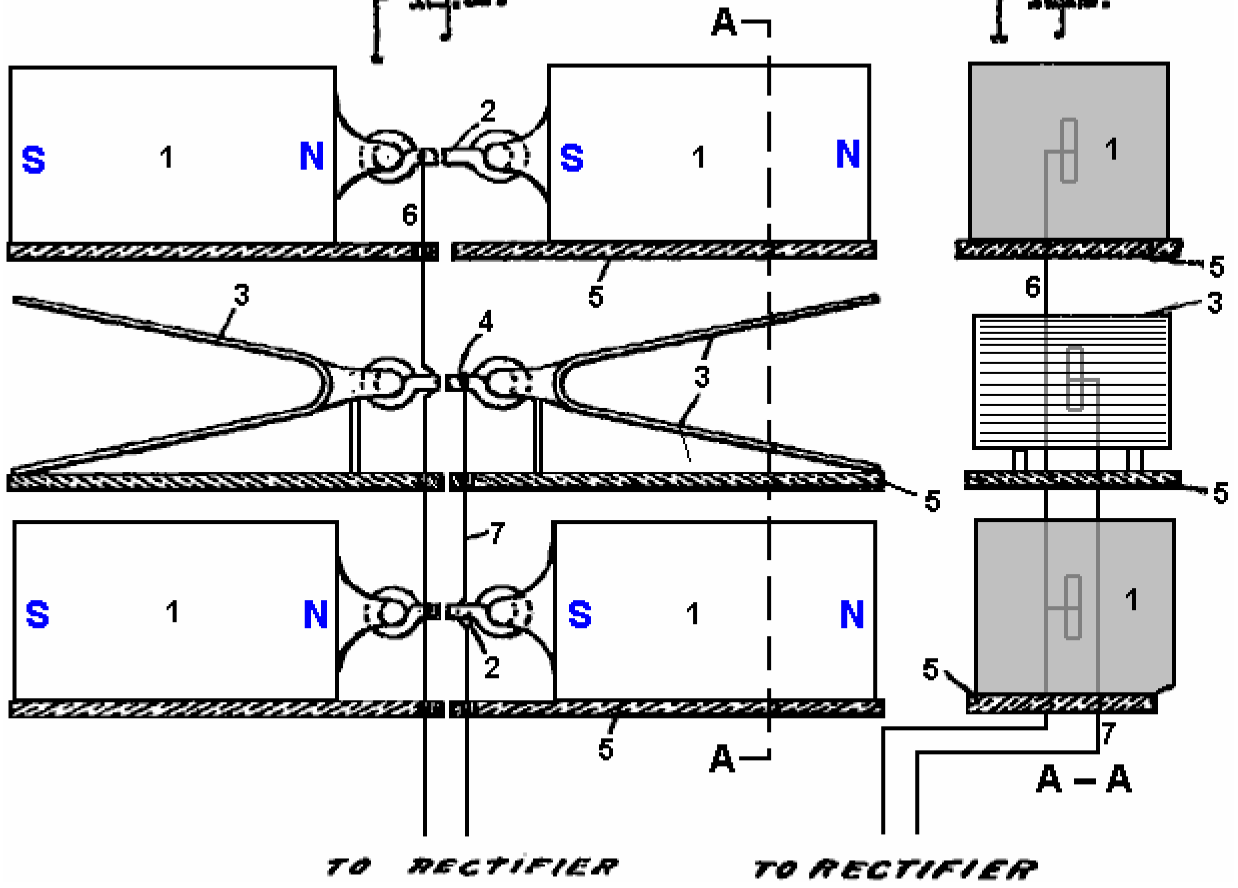

Fig.2 is a view is side elevation of the parts seen in plan in **Fig.1**
Fig.3 is a vertical section taken on the plane indicated by the line **A--A** of **Fig.2**.

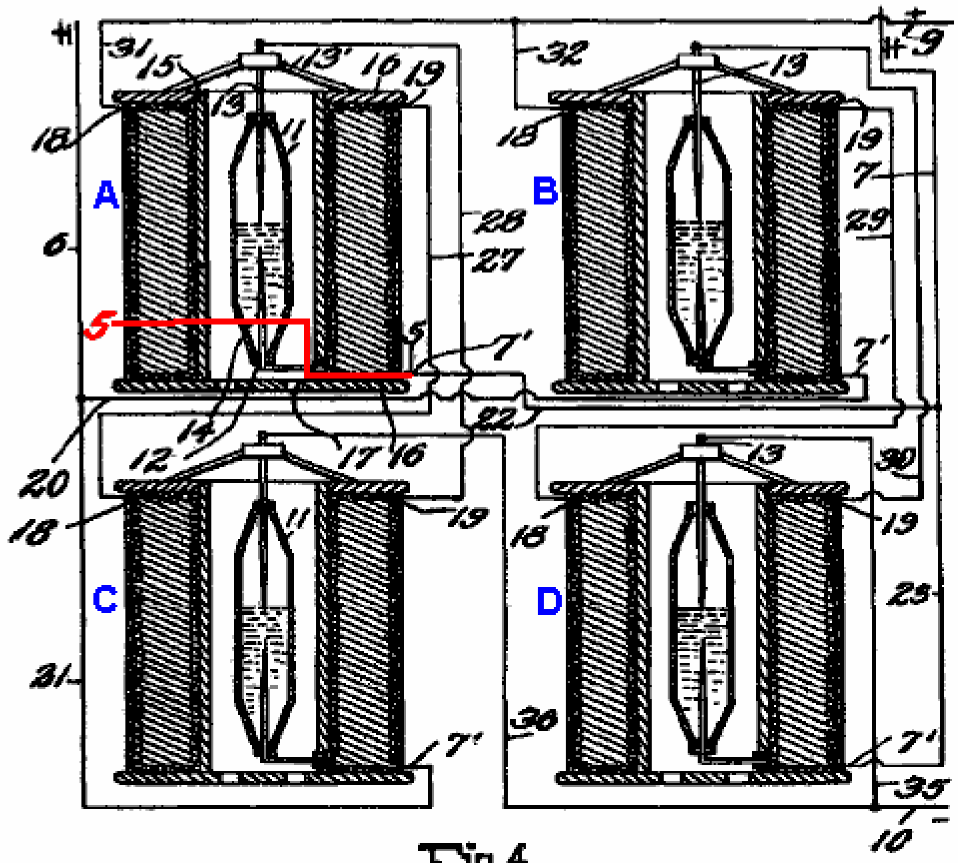

Fig.4

Fig.4 is a detail view, partly in elevation and partly in section, showing the connections of the converter and intensifier.

Fig.5.

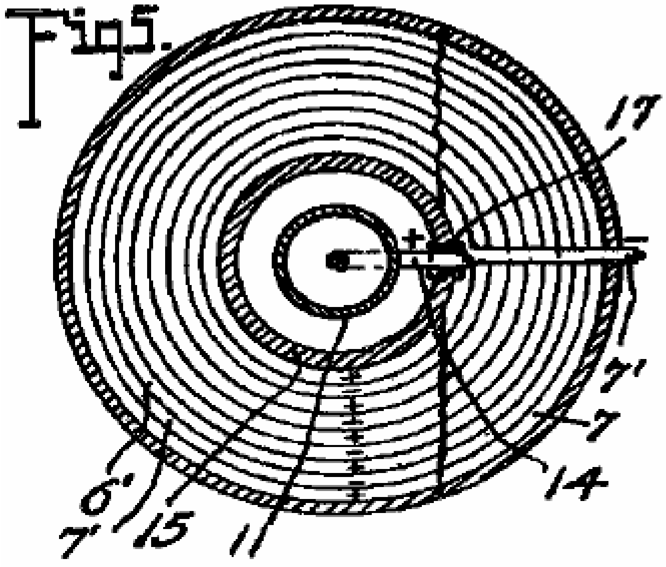

Fig.5 is a transverse section taken on the planes indicated by line **5-5** of **Fig.4**, looking downwards.

Fig.6

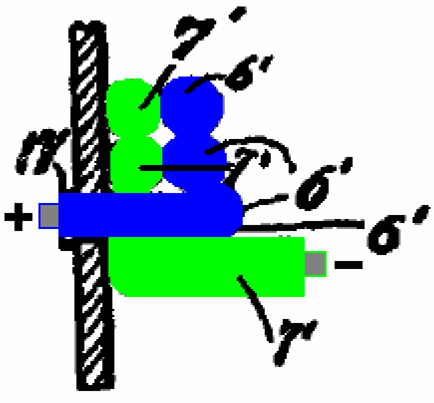

Fig.6 is an enlarged detail fragmentary section illustrating the parts at the junction of the conductors and one of the intensifiers.

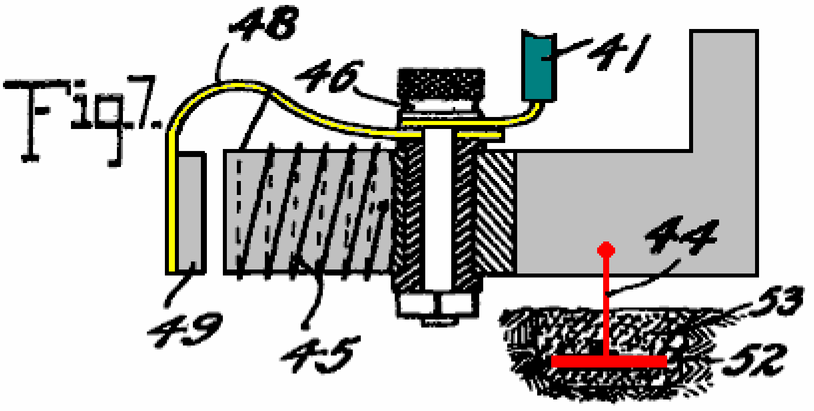

Fig.7 is an enlarged detail view partly in elevation and partly in section of one of the automatic cut-outs

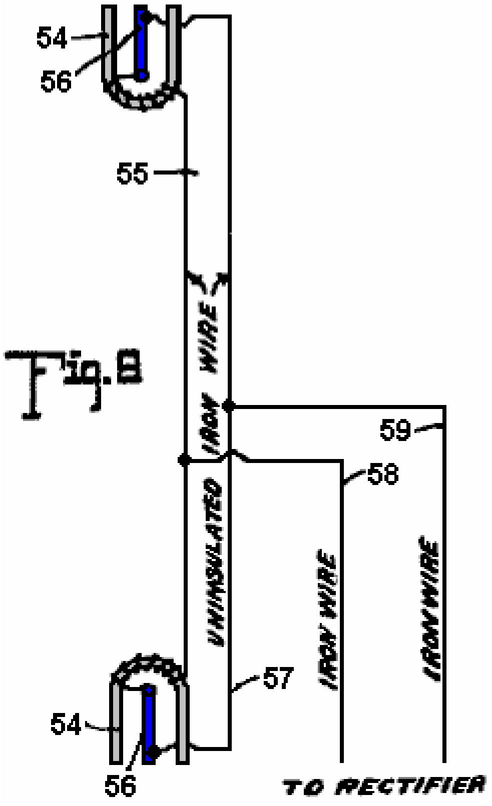

Fig.8 is a diagrammatic view of one of the simplest forms of embodiment of the invention.

Referring to the drawing by numerals, **1,1** indicates magnets connected by a magnetic substance **2**, preferably an iron wire. The magnets **1** are arranged in pairs, one pair being spaced beneath the other, and interposed between the magnets are zinc plates **3,3** connected by an iron wire conductor **4**. Suitable insulating supports **5** are arranged for sustaining the respective magnets **1** and plates **3,3**. Each plate **3** is preferably bent substantially into V form, as clearly seen in **Fig.1**, and the V of one of the plates opens or faces toward the North and the V of the other plate to the South. I have determined by experimentation that it is essential that the plates **3** be disposed substantially North and South with their flat faces approximately parallel to the adjacent faces of the co-operating magnets, although by experience I have not discovered any material difference in the current obtained when the plates are disposed slightly to one side of North and South, as for instance when the plates are disposed slightly to one side of North and South, as for instance when disposed in the line of the magnetic polarity of the earth. The same is true with respect to the magnets **1**, the said magnets being disposed substantially North and South for operative purposes, although I find that it is immaterial whether the North pole of one of the magnets is disposed to the North and the South pole to the South, or vice versa, and it is my conviction from experience that it is essential to have the magnets of each pair connected by magnetic material so that the magnets substantially become one with a pole exposed to the North and a pole exposed to the South.

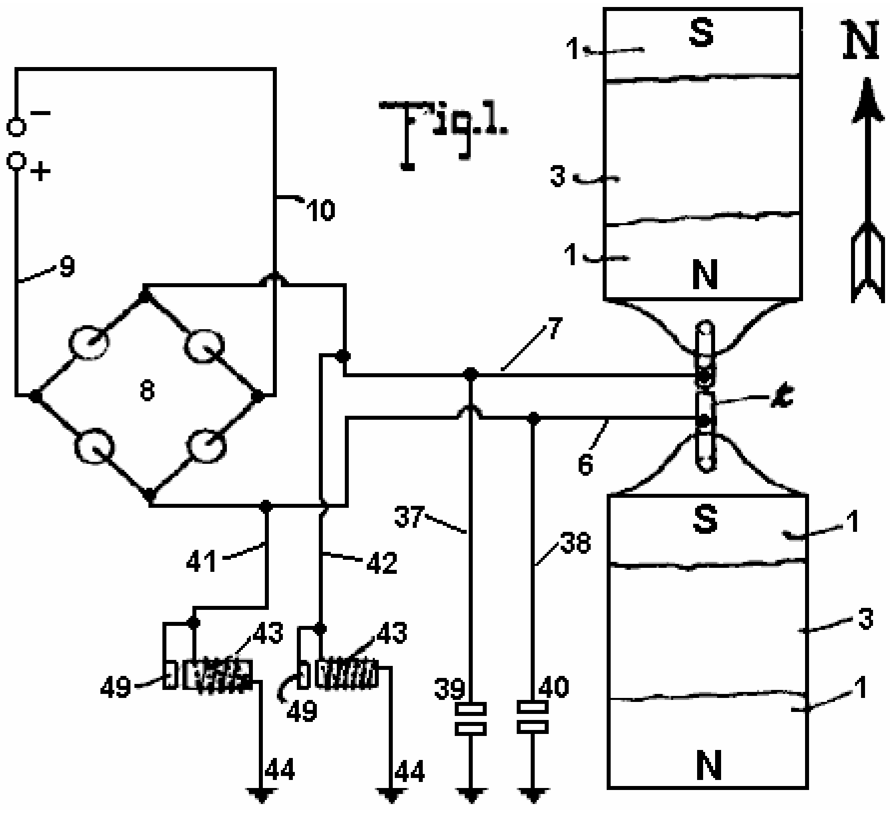
Fig.1.

In **Fig.1**, I have indicated in full lines by the letters **8** and **N** the respective polarities of the magnets **1**, and have indicated in dotted lines the other pole of those magnets when the connection **2** is severed. I have found that the magnets and zinc plates operate to produce, (whether by collection or generation I am not certain), electrical currents when disposed substantially North and South, but when disposed substantially East and West, no such currents are produced. I also find that the question of elevation is by no means vital, but it is true that more efficient results are obtained by placing the zincs and magnets on elevated supports. I furthermore find from tests, that it is possible to obtain currents from the apparatus with the zincs and magnets disposed in a building or otherwise enclosed, although more efficient results are obtained by having them located in the open.

While in **Figures 1, 2,** and **3**, I have shown the magnets and the zinc plates as superimposed, it will be apparent, as described in detail below, that these elements may be repositioned in horizontal planes, and substantially the same results will be secured. Furthermore, the magnets **1** with the interposed zincs **3**, as shown in **Figures 1, 2** and **3** merely represent a unit which may be repeated either horizontally or vertically for increasing the current supply, and when the unit is repeated the zinc plates are arranged alternating with the magnets throughout the entire series as indicated below.

A conductor **6** is connected in multiple with the conductors **2** and a conductor **7** is connected with conductor **4**, the conductor **6** extending to one terminal of a rectifier which I have indicated by the general reference character **8**, and the conductor **7** extending to the other terminal of the rectifier. The rectifier as seen in the diagram **Fig.1** may assume any of several well known embodiments of the electrical valve type and may consist of four asymmetric cells or Cooper-Hewitt mercury vapour lamps connected as indicated in **Fig.1** for permitting communication of the positive impulses from the conductor **6** only to the line conductor **9** and the negative impulses from conductor **6** on only to the line conductor **10**. The current from this rectifier may be delivered through the conductors **9** and **10** to any suitable source for consumption.

While the said rectifier **8** may consist of any of the known types, as above outlined, it preferably consists of a specially constructed rectifier which also has the capacity of intensifying the current and comprises specifically the elements shown in detail in **Figures 4, 5,** and **6** wherein I have disclosed the detail wiring of the rectifier when composed of four of the rectifying and intensify in elements instead of asymmetric cells or simple mercury vapour valves. As each of these structures is an exact embodiment of all the others, one only will be described, and the description will apply to all. The rectifying element of each construction consists of a mercury tube **11** which is preferably formed of glass or other suitable material, and comprises a cylinder having its end portions tapered and each terminating in an insulating plug or stopper **12**. Through the upper stopper **12** is extended the electrode **13** which extends well into the tube and preferably about one-half its length, to a point adjacent the inner end of an opposing electrode **14** which latter electrode extends from there down through the insulation **12** at the lower end of the tube. The tube **11** is supplied with mercury and is adapted to operate on the principle of the mercury vapour lamp, serving to rectify current by checking back impulses of one sign and permitting passage of impulses of the other.

To avoid the necessity for utilising a starter, as is common with the lamp type of electrical valve, the supply of mercury within the tube may be sufficient to contact with the lower end of the electrode **13** when current is not being supplied, so that as soon as current is passed from one electrode to the other sufficiently for volatilising that portion of the mercury immediately adjacent the lower end of electrode **13**, the structure begins its operation as a rectifier. The tube **11** is surrounded by a tube **15** which is preferably spaced from tube **11** sufficiently for allowing atmospheric or other cooling circulation to pass the tube **11**. In some instances, it may be desirable to cool the tube **11** by a surrounding body of liquid, as mentioned below. The tube **15** may be of insulating material but I find efficient results attained by the employment of a steel tube, and fixed to the ends of the of the tube are insulating disks **16**, **16** forming a spool on which are wound twin wires **6’** and **7’**, the wire **6’** being connected at the inner helix of the coil with the outer end of the electrode **14**, the lower portion of said electrode being extended to one side of the tube **11** and passed through an insulating sleeve **17** extending through the tube **15**, and at its outer end merging into the adjacent end of the wire **6’**. The wire **7’** extends directly from the outer portion of the spool through the several helices to a point adjacent to the junction of the electrode **14** with wire **6’** and thence continues parallel to the wire throughout the coil, the wire **6’** ending in a terminal **18** and the wire **7’** ending in a terminal **19**.

For the sake of convenience of description and of tracing the circuits, each of the apparatus just above described and herein known as an intensifier and rectifier will be mentioned as **A**, **B**, **C** and **D**, respectively. Conductor **6** is formed with branches **20** and **21** and conductor **7** is formed with similar branches **22** and **23.** Branch **20** from conductor **6** connects with conductor **7’** of intensifier **B** and branch **21** of conductor **6** connects with the conductor **7’** of intensifier **C**, while branch **22** of conductor **7** of intensifier **C**, while branch **22** of conductor **7** connects with conductor **7’** of intensifier **D**. A conductor **27** is connected to terminal **19** of intensifier **A** and extends to and is connected with the terminal **18** of intensifier **C**, and a conductor **7** connects with conductor **7’** of intensifier **D**. A conductor **27** is connected to terminal **19** of intensifier **A**, and extends to and is connected to terminal **18** of intensifier **C**, and a conductor **28** is connected to the terminal **19** of intensifier **C** and extends from the terminal **19** of intensifier **B** to the terminal **18** of intensifier **D** to electrode **13** of intensifier **B**. Each electrode **13** is supported on a spider **13’** resting on the upper disk **16** of the respective intensifier. Conductors **31** and **32** are connected to the terminals **18** of intensifiers **A** and **B** and are united to form the positive line wire **9** which co-operates with the negative line wire **10** and extends to any suitable point of consumption. The line wire **10** is provided with branches **35** and **36** extending to the electrodes **13** of intensifiers **C** and **D** to complete the negative side of the circuit.

Thus it will be seen that alternating currents produced in the wires **6** and **7** will be rectified and delivered in the form of a direct current through the line wires **9** and **10**, and I find by experiment that the wires **6** and **7** should be of iron, preferably soft, and may of course be insulated, the other wiring not specified as iron being of copper or other suitable material.

In carrying out the operation as stated, the circuits may be traced as follows: A positive impulse starting at the zincs **3** is directed along conductor **7** to branch **23** to conductor **7’** and the winding of the rectifier of intensifier **B** through the rectifier to the conductor **6’**, through its winding to the contact **18**, conductor **32** and to the line wire **9**. The next, or negative, impulse directed along conductor **7** cannot find its way along branch **23** and the circuit just above traced because it cannot pass across the rectifier of intensifier **B** but instead the negative impulse passes along conductor **22** to conductor **7** of intensifier **A** and its winding to the contact **19** and to conductor **27** to contact **18** of intensifier **C**, to the winding of the wire **6’** thereof to the electrode **14** through the rectifier to the of the electrode **13** and conductor of intensifier **A**, electrode **14** thereof and conductor **6'** to contact **18** and wire **31** to line wire **9**.

Obviously the positive impulse cannot pass along the wire **20** because of its inverse approach to the rectifier of intensifier **B**. The next impulse or negative impulse delivered to conductor **6** cannot pass along conductor **21** because of its connection with electrode **13** of the rectifier of intensifier **A**, but instead passes along conductor **20** to the wire **7'** and its winding forming part of intensifier **B** to the contact **19** and conductor **29** to contact **18** and the winding of wire **6'** of intensifier **D** to the electrode **14** and through the rectifier to the electrode **13** and conductor **35** to line wire **10**. Thus the current is rectified and all positive impulses directed along one line and all negative impulses along the other lie s that the potential difference between the two lines will be maximum for the given current of the alternating circuit. It is, of course, apparent that a less number of intensifiers with their accompanying rectifier elements may be employed with a sacrifice of the impulses which are checked back from a lack of ability to pass the respective rectifier elements, and in fact I have secured efficient results by the use of a single intensifier with its rectifier elements, as shown below.

Grounding conductors **37** and **38** are connected respectively with the conductors **6** and **7** and are provided with the ordinary lightning arresters **39** and **40** respectively for protecting the circuit against high tension static charges.

Conductors **41** and **42** are connected respectively with the conductors **6** and **7** and each connects with an automatic cut-out **43** which is grounded as at **4**. Each of the automatic cut-outs is exactly like the other and one of the these is shown in detail in **Fig.7** and comprises the inductive resistance **45** provided with an insulated binding post **46** with which the respective conductor **6** or **7** is connected, the post also supporting a spring **48** which sustains an armature **49** adjacent to the core of the resistance **45**. The helix of resistance **45** is connected preferably through the spring to the binding post at one end and at the other end is grounded on the core of the resistance, the core being grounded by ground conductor **44** which extends to the metallic plate **52** embedded in moist carbon or other inductive material buried in the earth. Each of the conductors **41**, **42** and **44** is of iron, and in this connection I wish it understood that where I state the specific substance I am able to verify the accuracy of the statement by the results of tests which I have made, but of course I wish to include along with such substances all equivalents, as for instance, where iron is mentioned its by-products, such as steel, and its equivalents such as nickel and other magnetic substances are intended to be understood.

The cut-out apparatus seen in detail in **Fig.7** is employed particularly for insuring against high voltage currents, it being obvious from the structure shown that when potential rises beyond the limit established by the tension of the spring sustaining the armature **40**, the armature will be moved to a position contacting with the core of the cut-out device and thereby directly close the ground connection for line wire **41** with conductor **44**, eliminating the resistance of winding **45** and allowing the high voltage current to be discharged to the ground. Immediately upon such discharge the winding **45** losing its current will allow the core to become demagnetised and release the armature **49** whereby the ground connection is substantially broken leaving only the connection through the winding **45** the resistance of which is sufficient for insuring against loss of low voltage current.

In **Fig.8** I have illustrated an apparatus which though apparently primitive in construction and arrangement shows the first successful embodiment which I produced in the course of discovery of the present invention, and it will be observed that the essential features of the invention are shown there. The structure shown in the figure consists of horseshoe magnets **54**, **55**, one facing North and the other South, that is, each opening in the respective directions indicated and the two being connected by an iron wire **55** which is uninsulated and wrapped about the respective magnets each end portion of the wire **55** being extended from the respective magnets to and connected with, as by being soldered to, a zinc plate **56**, there being a plate **56** for each magnet and each plate being arranged longitudinally substantially parallel with the legs of the magnet and with the faces of the plate exposed toward the respective legs of the magnet, the plate being thus arranged endwise toward the North and South. An iron wire **57** connects the plates **56**, the ends of the wire being preferably connected adjacent the outer ends of the plates but from experiment I find that the wire may be connected at practically any point to the plate. Wires **58** and **59** are connected respectively with the wires **55** and **57** and supply an alternating current at a comparatively low voltage, and to control such current the wires **58** and **59** may be extended to a rectifier or combined rectifier and intensifier, as discussed above.

The tests which I have found successful with the apparatus seen in **Fig.8** were carried out by the employment first of horseshoe magnets approximately 4 inches in length, the bar comprising the horseshoe being about one inch square, the zincs being dimensioned proportionately and from this apparatus with the employment of a single intensifier and rectifier, as above stated, I was able to obtain a constant output of 8 volts.

It should be obvious that the magnets forming one of the electrodes of this apparatus may be permanent or may be electromagnets, or a combination of the two.

While the magnets mentioned throughout the above may be formed of any magnetic substance, I find the best results obtained by the employment of the nickel chrome steel.

While the successful operation of the various devices which I have constructed embodying the present invention have not enabled me to arrive definitely and positively at fixed conclusion relative to the principles and theories of operation and the source from which current is supplied, I wish it to be understood that I consider myself as the first inventor of the general type described above, capable of producing commercially serviceable electricity, for which reason my claims hereinafter appended contemplate that I may utilise a wide range of equivalents so far as concerns details of construction suggested as preferably employed.

The current which I am able to obtain is dynamic in the sense that it is not static and its production is accomplished without chemical or mechanical action either incident to the actual chemical or mechanical motion or incident to changing caloric conditions so that the elimination of necessity for the use of chemical or mechanical action is to be considered as including the elimination of the necessity for the use of heat or varying degrees thereof.

PAULO and ALEXANDRA CORREA

Pat. Application US 2006/0082,334 20th April 2006 Inventors: Paulo & Alexandra Correa

ENERGY CONVERSION SYSTEMS

This patent application shows the details of devices which can produce ordinary electricity from Tesla longitudinal waves. If these claims are correct (and there does not appear to be the slightest reason for believing that they are not), then implementations of this patent application are capable of producing free electrical power and the importance of this information is enormous.

ABSTRACT

This invention relates to apparatus for the conversion of mass-free energy into electrical or kinetic energy, which uses in its preferred form a transmitter and a receiver both incorporating Tesla coils, the distal ends of whose secondary windings are co-resonant and connected to plates of a chamber, preferably evacuated or filled with water, such that energy radiated by the transmitter may be picked up by the receiver, the receiver preferably further including a pulsed plasma reactor driven by the receiver coil and a split phase motor driven by the reactor. Preferably the reactor operates in pulsed abnormal gas discharge mode, and the motor is an inertially dampened drag motor. The invention also extends to apparatus in which an otherwise driven plasma reactor operating in pulsed abnormal gas discharge mode in turn used to drive an inertially dampened drag motor.

DESCRIPTION

This is a continuation of application Ser. No. 09/907,823, filed Jul. 19, 2001.

FIELD OF THE INVENTION

This invention relates to systems for the conversion of energy, inter alia in the form of what we will refer to for convenience as Tesla waves (see below), to conventional electrical energy.

BACKGROUND OF THE INVENTION

Energy converters that are fed by local or environmental energy are usually explained by taking recourse to the notion that they convert zero point electromagnetic radiation (ZPE) to electric energy. The ZPE theories have gained a life of their own, as T. Kuhn has pointed out (in his "Black Body Theory and the Quantum"), after emerging from Planck's second theory, specifically from the term $\frac{1}{2} h\upsilon$ in the new formula for oscillator energy. In 1913, Einstein and Stern suggested that motional frequencies contributing to specific heat fell into two categories--those that were independent of temperature and those that were not (e.g. rotational energy), leading them to conclude that zero-point energy on the order of $\frac{1}{2} h\upsilon$ was most likely. In the second part of their paper, however, they provided a derivation of Planck's Law without taking recourse to discontinuity, by assuming that the value of the ZPE was simply ha. It is worth noting that Einstein had already in 1905 ("Erzeugung und Verwandlung des Lichtes betreffenden heuristichen Gesichtspunkt",Ann. d. Phys, 17, 132) framed the problem of discontinuity, even if only heuristically, as one of placing limits upon the infinite energy of the vacuum state raised by the Rayleigh-Jeans dispersion law. According to Einstein, the Rayleigh-Jeans law would result in an impossibility, the existence of infinite energy in the radiation field, and this was precisely incompatible with Planck's discovery - which suggested instead, that at high frequencies the entropy of waves was replaced by the entropy of particles. Einstein, therefore, could only hope for a stochastic validation of Maxwell's equations at high frequencies "by supposing that electromagnetic theory yields correct time-average values of field quantities", and went on to assert that the vibration-energy of high frequency resonators is exclusively discontinuous (integral multiples of $h\upsilon$).

Since then, ZPE theories have gone on a course independent from Planck's second theory. The more recent root of modern ZPE theories stems from the work of H. Casimir who, in 1948, apparently showed the existence of a force acting between two uncharged parallel plates. Fundamentally the Casimir effect is predicated upon the existence of a background field of energy permeating even the “vacuum”, which exerts a radiation pressure, homogeneously and from all directions in space, on every body bathed in it. Given two bodies or particles in proximity, they shield one another from this background radiation spectrum along the axis (i.e. the shortest distance) of their coupling, such that the radiation pressure on the facing surfaces of the two objects would be less than the radiation pressure experienced by all other surfaces and coming from all other directions in space. Under these conditions, the two objects are effectively pushed towards one another as if by an attractive force. As the distance separating the two objects diminishes, the force pushing them together increases until they collapse one on to the other. In this sense, the Casimir effect would be the macroscopic analogy of the microscopic van der Waals forces of attraction responsible for such dipole-dipole interactions as hydrogen bonding. However, it is worth noting that the van der Waals force is said to tend to establish its normal radius, or the optimal distance between dipoles, as the distance where the greatest attractive force is exerted, beyond which the van der Waals forces of nuclear and electronic repulsion overtake the attraction force.

Subsequently, another Dutch physicist, M. Sparnaay, demonstrated that the Casimir force did not arise from thermal radiation and, in 1958, went on to attribute this force to the differential of radiation pressure between the ZPE radiation from the vacuum state surrounding the plates and the ZPE radiation present in the space between them. Sparnaay's proposal is that a classical, non-quantal, isotropic and ubiquitous electromagnetic zero-point energy exists in the vacuum, and even at a temperature of absolute zero. It is further assumed that since the ZPE radiation is invariant with respect to the Lorentz transformations, it obeys the rule that the intensity of its radiation is proportional to the cube of the frequency, resulting in an infinite energy density for its radiation spectrum.

What appeared to be the virtue of this reformulated theory was the notion that the vacuum no longer figured as pure space empty of energy, but rather as a space exposed to constantly fluctuating “fields of electromagnetic energy”.

Puthoff has utilised the isomorphism between van der Waals and Casimir forces to put forth the zero-point (ZP) energy theory of gravity, based on the interpretation that the virtual electromagnetic ZP field spectrum predicted by quantum electrodynamics (QED) is functionally equivalent to an actual vacuum state defined as a background of classical or Maxwellian electromagnetic radiation of random phases, and thus can be treated by stochastic electrodynamics (SED). Whereas in QED, the quanta are taken as virtual entities and the infinite energy of the vacuum has no physical reality, for SED, the ZPE spectrum results from the distortion of a real physical field and does not require particle creation. Gravity then, could be seen as only the macroscopic manifestation of the Casimir force.

We do not dispute the fact that even in space-absent matter, there is radiant energy present which is not of a thermal nature. But we claim that this energy is not electromagnetic, nor is its energy spectrum-infinite. That this is so, stems not just from our opinion that it is high time that Einstein's heuristic hypothesis should be taken as literally factual - in the dual sense that all electromagnetic energy is photon energy and all photons are local productions, but above all from the fact that it is apparent, from the experiments of Wang and his colleagues (Wang, Li, Kuzmich, A & Dogariu, A. "Gain-assisted superluminal light propagation", Nature 406; #6793; 277), that the photon stimulus can propagate at supraluminal speeds and lies therefore well outside of any scope of electromagnetic theory, be this Maxwell's classical approach taken up by ZPE theories, or Einstein's special relativistic phenomenology of Maxwell's theory. The fact is, that if the light stimulus can propagate at speeds greater than those of light, then what propagates is not light at all, and thus not energy configured electromagnetically. Light is solely a local production of photons in response to the propagation of a stimulus that itself is not electromagnetic.

It is critical to understand that the implication from this, that - aside from local electromagnetic radiation and from thermal radiation associated with the motions of molecules (thermo-mechanical energy), there is at least one other form of energy radiation which is everywhere present, even in space-absent matter. Undoubtedly, it is that energy which prevents any attainment of absolute zero, for any possible local outpumping of heat is matched by an immediate local conversion of some of this energy into a minimum thermal radiation required by the manifolds of Space and Time. Undoubtedly also, this radiation is ubiquitous and not subject to relativistic transformations (i.e. it is Lorentz invariant). What it is not, is electromagnetic radiation consisting of randomistic phases of transverse waves.

To understand this properly, one must summarise the differences from existing ZPE theories - and all these differences come down to the fact that this energy, which is neither electromagnetic nor thermal per se, (and is certainly not merely thermo-mechanical), has nevertheless identifiable characteristics both distributed across sub-types or variants and also common to all of them.

Essentially, the first sub-type or variant consists of longitudinal mass-free waves which deploy electric energy. They could well be called Tesla waves, since Tesla-type transformers can indeed be shown experimentally to radiate mass-free electric energy, in the form of longitudinal magnetic and electric waves having properties not reducible to photon energy nor to “electromagnetic waves”, and having speeds of displacement which can be much greater than the limit c for all strictly electromagnetic interactions.

One may well denote the second sub-type by the designation of mass-free thermal radiation, since it contributes to temperature changes - and, as obviously indicated by the impossibility of reaching an absolute zero of temperature, this contribution occurs independently of the presence of matter, or mass-energy, in Space. In other words, not all thermal radiation can be reduced to vibration, rotation and translation (drift motion) of molecules, i.e. to thermomechanical energy, because the properties of pressure and volume which determine temperature and affect matter, appear indeed to a great extent to be independent from matter, a fact which itself is responsible for the observed catastrophic and unexpected phase changes of matter and has required to this day the insufficient explanation offered semi-empirically by the Van der Waals Force Law.

Finally, the third sub-type may be designated latent mass-free energy radiation - since it deploys neither charge, nor thermal or baroscopic effects, and yet it is responsible for “true latent heat” or for the “intrinsic potential energy” of a molecule. It is also responsible for the kineto-regenerative phenomenon whereby an electroscope performs a variable charge-mediated work against the local gravitational field.

The common characteristic of all three sub-types of mass-free energy radiation is that they share the same non-classical fine structure, written as follows for any energy unit, where **c** is any speed of light wave function, and the wavelength λ and wave function $\mathbf{W}$ are interconnected as a function of the physical quality of the energy field under consideration: $E=\lambda cW$

In the instance of longitudinal electric radiation, this takes on the directly quantifiable form:

$$E=(\lambda_q c)W_v=p_c W_v=(h/\lambda_x)W_v=\int=qV$$

where:

$\mathbf{W_v}$ is the voltage-equivalent wave function corresponding to V,

$\mathbf{P_e}$ constitutes the linear momentum corresponding to the conventional q or e,

h is the Planck constant,

λ_x is the Duane-Hunt constant expressed as a wavelength,

λ_q is a wavelength constant; and the sign

$=\int=$ signifies exact equality between an expression in the conventional dimensions of length, mass and time, and an expression in length and time dimensions alone.

In the instance of mass-free thermal radiation (contributing to temperature changes), the transformation obeys Boltzmann's rule (**k** is now Boltzmann's constant and T is Kelvin-scale temperature):

$$E=\lambda_{n1}cW_{n1}=\lambda_{n1}(\pi_V\zeta_p)(\lambda_{n1})\sim=kT$$

and in the third instance - of latent mass-free radiation, the transformation obeys the rule:

$$E=\lambda_{n1}cW_{n1} = \lambda_{n1}(\lambda_{n1}\zeta_{n1})(\lambda_{n1}f_{n1}) = \lambda_{n1}^{3}\zeta_{n1}f_{n1}$$

where ζ and f are frequency functions, f being a specific gravitational frequency term, and f_{n1} being defined as equal to $(\lambda_{n1})^{-0.5}\text{meter}^{0.5}\text{sec}^{-1}$ and ζ_{n1} has the value of c/λ_{n1}

If the electric variant of mass-free radiation has a direct quantum equivalence, via the Duane-Hunt Law, none of the three primary aether energy variants possess either the classic form of electromagnetic energy which requires square superimposition of speed of light wave functions **c**, as $\mathbf{c^2}$, or the quantum form of energy, requiring $E = h\upsilon$. The critical first step in the right direction may well be attributed to Dr. W. Reich, as it regards the fact that mass-free energy couples two unequal wave functions, only one of which is electromagnetic and abides by the limit **c**. We then unravelled the threefold structure described above, and further showed that, in the case of longitudinal electric waves, the postulated equivalence $(q=\lambda_q c)$ is merely phenomenological, as these waves are not restricted by the function **c** in their conveying of electric charge across space. It can further be demonstrated that all black-body photons are bound by an upper frequency limit (64×10^{14} Hz), above which only ionising photons are produced, and that all black-body photons arise precisely from the interaction of mass-free electric radiation with molecules of matter (including light leptons), whereby the energy of that radiation is locally converted into photon or electromagnetic radiation. In other words, all non-ionising electromagnetic energy appears to be secondary energy which results locally from the interaction of matter with mass-free electric energy. It cannot therefore consist of the primary energy that is present in the vacuum, an energy that is neither virtual nor electromagnetic, but actual and concrete in its electric, thermal and antigravitic manifestations. Lastly, gravitational energy, being either the potential or the kinetic energy responsible for the force of attraction between units of matter, is a manifestation that also requires, much as electromagnetic radiation does, coupling of mass-free energy to matter or to mass-energy.

The Tesla coil is a generator of a mass-free electric energy flux which it transmits both by conduction through the atmosphere and by conduction through the ground. Tesla thought it did just that, but it has been since regarded instead (because of Maxwell, Hertz and Marconi) as a transmitter of electromagnetic energy. The transmitter operates by a consumption of mass-bound electric power in the primary, and by induction it generates in the coupled secondary two electric fluxes, one mass-bound in the coil conductor, and the other mass-free in the body of the solenoid. Tesla also proposed and demonstrated a receiver for the mass-free energy flux in the form of a second Tesla coil resonant with the first. The receiver coil must be identical and tuned to the transmitter coil; the capacitance of the antenna plate must match that of the transmitter plate; both transmitter and receiver coils must be grounded; and the receiver coil input and output must be unipolar, as if the coil were wired in series.

The generators of mass-free energy with which we are concerned, provide current pulses associated with a dampened wave (DW) oscillation of much higher frequency than the pulse repetition frequency. A particular problem in recovering the mass-free energy content of such pulses is provided by the dampened wave oscillations. Although in our U.S. Pat. No. 5,416,391 we describe arrangements incorporating split phase motors to recover such energy, their efficiency is a great deal less than what should theoretically be attainable. Other workers such as Tesla and Reich, have encountered the same problem to an even greater degree.

In nineteenth century motor engineering terminology, dynamos capable of producing direct current by continuous homopolar induction were known as “unipolar” generators. The term “unipolar induction” appears to have originated with W. Weber, to designate homopolar machines where the conductor moves continuously to cut the magnetic lines of one kind of magnetic pole only, and thus require sliding contacts to collect the generated current. Faraday's rotating copper disc apparatus was, in this sense, a homopolar generator when the disc was driven manually, or a homopolar motor when the current was provided to it. Where the rotating conductor continuously cuts the magnetic field of alternatingly opposite magnetic poles, the operation of a machine, whether a generator or a motor, is said to be “heteropolar”. Unipolar machines went on to have a life of their own in the form of low voltage and high current DC generators - from Faraday, through Plucker, Varley, Siemens, Ferraris, Hummel, to Lord Kelvin, Pancinoti, Tesla and others - almost exclusively in the form of disc dynamos, but some having wound rotors.

In Mordey's alternator, and in so-called “inductor alternators”, however, homopolar generators were employed to obtain alternating currents, with the use of rotors wound back and forth across the field. Use of smooth, unwound rotors in AC induction motors (as opposed to AC synchronous motors, such as hysteresis motors) was a later development than homopolar dynamos. By 1888, Tesla and Ferraris amongst still others, had independently produced rotating magnetic fields in a motor, by employing two separate alternate currents with the same frequency but different phase. Single phase alternate current motors were developed later, and split-phase motors were developed last. Ferraris (Ferraris, G (1888) "Rotazioni elettrodynamiche", Turin Acad, March issue.) proposed the elementary theory of the 2-phase motor, where the current induced in the rotor is proportional to the slip (the difference between-the angular velocity of the magnetic field and that of the rotating cylinder), and the power of the motor is proportional to both the slip and the velocity of the rotor.

If an iron rotor is placed within the rotating magnetic field of a 2-phase stator, it will be set in rotation, but not synchronously, given that it is always attracted to the moving magnetic poles with a lag. But if an aluminium or copper rotor is used instead, it gets “dragged” around by the rotating stator field because of the eddy currents induced in it. If the aluminium or copper rotor were to rotate synchronously with the stator magnetic field, there would be no induced eddy currents and thus no motor action would result. The motor action depends, in this instance, upon the presence of asynchronous slip, since the function of the latter is to sustain the induction of those currents in the rotor that are responsible for the motor action of the dragged rotor. This then is the origin of the term “AC drag motors”. Once the drag rotor evolved from a cylinder to a hollow cup, they earned the epithet of “drag-cup motors”. Later, already in the 20th century, the cups were fitted over a central stator member, and the sleeve rotor 2-phase servo motor was born.

Tesla knew that impulse currents as well as CW (constant wave) sinusoidal currents could be used to drive AC motors. Regarding his invention of a hysteresis motor (which he called a “magnetic lag motor”), he stated: " . . . pulsatory as well as an alternating current might be used to drive these motors . . . " (Martin, T C (1894) "The inventions, researches and writings of Nikola Tesla", Chapter XII, p. 68). In his search for efficient utilisation of the high frequency DW (dampened wave) impulse currents of his induction coils, Tesla began by employing an AC disc induction motor as shown in Fig.17 of his famous 1892 address (Tesla, N (1892) "Experiments with alternate currents of high potential and high frequency", in "Nikola Tesla Lectures", 1956, Beograd, pp. L-70-71). This consisted of a copper or aluminium disc mounted vertically along the longitudinal axis of an iron core on which was wound a single motor coil which was series wired to the distal terminal of an induction coil at one end, and to a large suspended and insulated metal plate at the other. What was new about this was the implementation of an AC disc induction motor drive, where the exciting current travelled directly through the winding with just a unipolar connection to the coil secondary (under certain conditions, even the series connection to the plate could be removed, or replaced with a direct connection to the experimenter's body): "What I wish to show you is that this motor rotates with one single connection between it and the generator" (Tesla, N. (1892), op. cit., L-70, Tesla's emphasis). Indeed, he had just made a critical discovery that, unlike in the case of mass-bound charge where current flow requires depolarisation of a bipolar tension, mass-free charge engages current flow unipolarly as a mere matter of proper phase synchronisation:

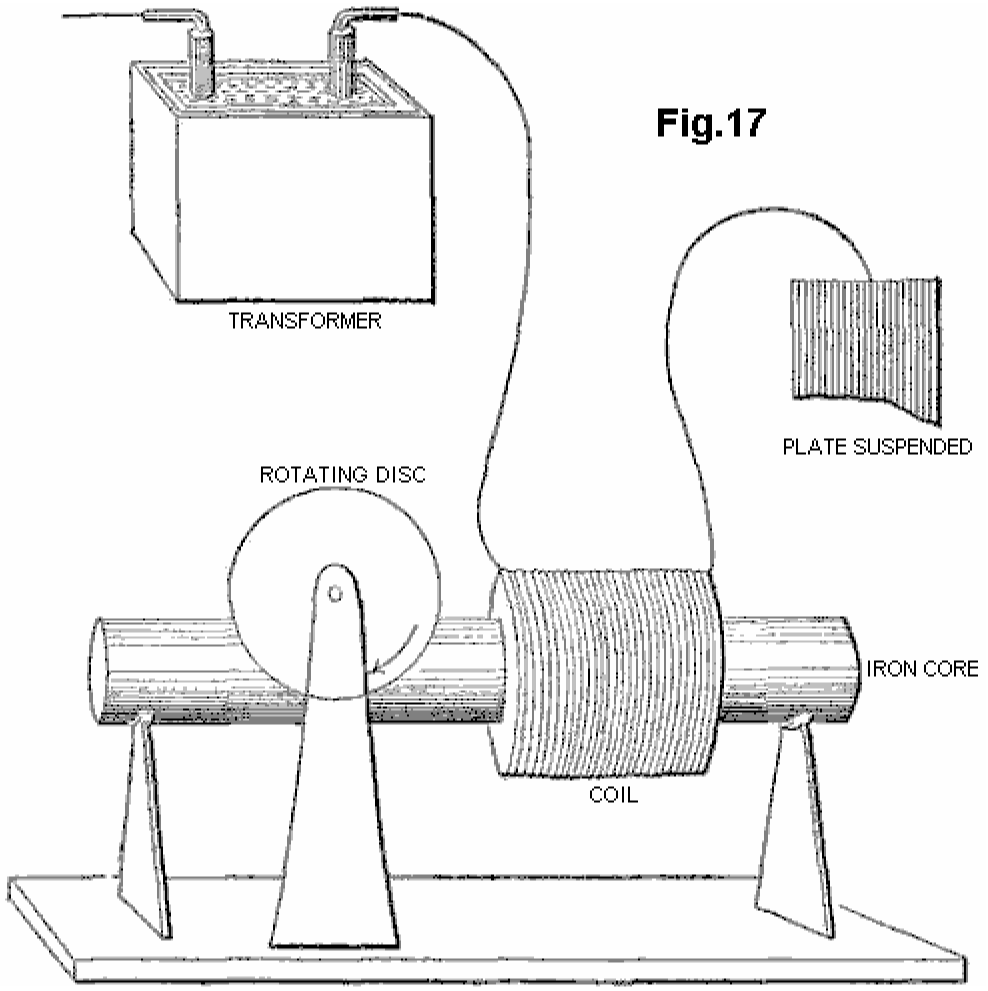

Fig.17

Tesla thought that his motor was particularly adequate to respond to windings which had “high-self-induction”, such as a single coil wound on an iron core. The basis of this self-induction is the magnetic reaction of a circuit, or an element of a circuit - an inductor - whereby it chokes, dims or dampens the amplitude of electric waves and retards their phase.

For the motor to respond to still higher frequencies, one needed to wind over the primary motor winding, a partial overlap secondary, closed through a capacitor, since "it is not at all easy to obtain rotation with excessive frequencies, as the secondary cuts off almost completely the lines of the primary" (Idem, L-71.).

Tesla stated that "an additional feature of interest about this motor" was that one could run it with a single connection to the earth ground, although in fact one end of the motor primary coil had to remain connected to the large, suspended metal plate, placed so as to receive or be bathed by "an alternating electrostatic field", while the other end was taken to ground. Thus Tesla had an ordinary induction coil that transmitted this "alternating electrostatic field", an untuned Tesla antenna receiving this "field", and a receiver circuit comprising his iron-core wound motor primary, a closely coupled, capacitatively closed secondary, and the coupled non-ferromagnetic disc rotor. Eventually, in his power transmission system, he would replace this transmitter with a Tesla coil, and place an identical receiving coil at the receiving end, to tune both systems and bring them into resonance. But his motor remained undeveloped, and so did the entire receiver system.

Tesla returned to this subject a year later, saying "on a former occasion I have described a simple form of motor comprising a single exciting coil, an iron core and disc" (Tesla, N (1893) "On light and other high frequency phenomena", in "Nikola Tesla Lectures", 1956, Beograd, pp. L-130, and L-131 with respect to Fig.16-II). He describes how he developed a variety of ways to operate such AC motors unipolarly from an induction transformer, and as well other arrangements for "operating a certain class of alternating motors founded on the action of currents of differing phase". Here, the connection to the induction transformer is altered so that the motor primary is driven from the coarse secondary of a transformer, whose finer primary is coupled, at one end, directly and with a single wire to the Tesla secondary, and at the other left unconnected. On this occasion, Tesla mentions that such a motor has been called a “magnetic lag motor”, but that this expression (which, incidentally, he had himself applied to his own invention of magnetic hysteresis motors) is objected to by "those who attribute the rotation of the disc to eddy currents when the core is finally subdivided" (Tesla, N (1893), op. cit., p. L-130).

In none of the other motor solutions, 2-phase or split-phase, that he suggests as unipolar couplings to the secondary of an induction coil, does the non-ferromagnetic disc rotor motor again figure. But he returns to it a page later, and indirectly so, by first addressing the disadvantages of ferromagnetic rotors: "Very high frequencies are of course not practicable with motors on account of the necessity of employing iron cores. But one may use sudden discharges of low frequency and thus obtain certain advantages of high-frequency currents-without rendering the iron core entirely incapable of following the changes and without entailing a very great expenditure of energy in the core. I have found it quite practicable to operate, with such low frequency disruptive discharges of condensers, alternating-current motors."

In other words--whereas his experiments with constant wave (CW) alternating currents, and as well with high-voltage dampened wave (DW) impulses from induction coils, indicated the existence of an upper frequency limit to iron core motor performance, one might employ instead high-current, DW impulses - of high DW frequencies but low impulse rates - to move these motors quite efficiently. Then he adds "A certain class of [AC] motors which I advanced a few years ago, that contain closed secondary circuits, will rotate quite vigorously when the discharges are directed through the exciting coils. One reason that such a motor operates so well with these discharges is that the difference of phase between the primary and secondary currents is 90 degrees, which is generally not the case with harmonically rising and falling currents of low frequency. It might not be without interest to show an experiment with a simple motor of this kind, inasmuch as it is commonly thought that disruptive discharges are unsuitable for such purposes."

What he proposes next, forms the basis of modern residential and industrial AC electric power meters, the AC copper disc motor whose rotor turns on the window of these meters, propelled forward by the supply frequency. But instead of employing any such Constant Wave input, Tesla uses the disruptive discharges of capacitors, incipiently operating as current rectifiers. With the proper conditions, e.g. correct voltage from the generator, adequate current from the capacitor, optimum capacitance for the firing rate, and tuned spark-gap, to mention a few, Tesla found that the non-ferromagnetic disc rotor turned but with considerable effort. But this hardly compared to the results obtained with a high-frequency CW alternator, which could drive the disc "with a much smaller effort". In summary then, Tesla went as far as being the first to devise a motor driven by Tesla waves, that employed a non-ferromagnetic rotor, and whose arrangement encompassed both transmitter and receiver circuits. For this purpose, he employed a single-phase method in which the signal is fed unipolarly to the winding, placed in series with a plate capacitance.

Tesla also later proposed driving a similar single-phase non-ferromagnetic disc motor from bipolar capacitative discharges through an atmospheric spark-gap now placed in parallel with the main motor winding, and again simulating a split-phase by a closely-wound secondary which was closed by a capacitance.

As Tesla admits, the results of all his AC eddy current motor solutions were meagre and limited by current and frequency problems. Likewise, the two-phase arrangements proposed by Reich for his OR motor, involving a superimposition of the Dampened Waves of a first phase on a fixed Continuous Wave second phase, require an external power source and a pulse amplifier circuit, and failed to meet Reich's own requirements.

We have previously proposed the use of squirrel cage motors with capacitative splitting of phase to convert the Dampened Wave output of plasma pulsers, but once a Squirrel Cage is introduced, the dampening effect which the non-ferromagnetic copper cage exerts in being dragged by the revolving stator field, is counteracted by the ferromagnetic cylinder of laminated iron, in which the copper cage is embedded, working to diminish the slip and bring the rotor to near synchronism. This is, in all likelihood, what limits Squirrel Cage motors responding to the DC component of the Dampened Wave impulse, and thus be limited to respond to fluxes of mass-bound charges. Historically, as we shall see, the obvious advantage of the Squirrel Cage servo motors lay in the fact that, in particular for 2-phase applications, they were far more efficient at performing work without evolution of heat. Indeed, if the eddy currents in the non-ferromagnetic rotor are permitted to circulate in non-ordered form, the rotor material and stator will heat up rapidly and consume much power in that heating. This is in fact considered to be a weakness of AC non-ferromagnetic-rotor induction motors.

SUMMARY OF THE INVENTION

The present invention is concerned with conversion to conventional electrical energy of the variants of mass-free energy radiation considered above, referred to for convenience as Tesla waves, mass-free thermal radiation and latent mass-free radiation. The first variant of such radiation was recognised, generated and at least partially disclosed by Tesla about a hundred years ago, although his work has been widely misinterpreted and also confused with his work on the transmission of radio or electromagnetic waves. The Tesla coil is a convenient generator of such radiation, and is used as such in many of the embodiments of our invention described below, but it should be clearly understood that our invention in its broadest sense is not restricted to the use of such a coil as a source of mass-free radiation and any natural or artificial source may be utilised. For example, the sun is a natural source of such radiation, although interaction with the atmosphere means that it is largely unavailable at the earth's surface, limiting applications to locations outside of the earth's atmosphere.

According to the invention, a device for the conversion of mass-free radiation into electrical or mechanical energy comprises a transmitter of mass-free electrical radiation having a dampened wave component, a receiver of such radiation tuned to resonance with the dampened wave frequency of the transmitter, a co-resonant output circuit coupled into and extracting electrical or kinetic energy from the receiver, and at least one structure defining a transmission cavity between the transmitter and the receiver, a full-wave rectifier in the co-resonant output circuit, and an oscillatory pulsed plasma discharge device incorporated in the co-resonant output circuit. The output circuit preferably comprises a full-wave rectifier presenting a capacitance to the receiver, or an electric motor, preferably a split-phase motor, presenting inductance to the receiver. The transmitter and receiver each preferably comprise a Tesla coil and/or an autogenous pulsed abnormal glow discharge device. The transmission cavity is preferably at least partially evacuated, and comprises spaced plates connected respectively to the farthest out poles of the secondaries of Tesla coils incorporated in the transmitter and receiver respectively, the plates being parallel or concentric. The structure defining the cavity may be immersed in ion-containing water. The split-phase motor is preferably an inertially-dampened AC drag motor.

The invention, and experiments demonstrating its basis, are described further below with reference to the accompanying drawings.

SHORT DESCRIPTION OF THE DRAWINGS

Fig.1 is a schematic view of a Tesla coil connected to a full-wave rectifier to form an energy conversion device:

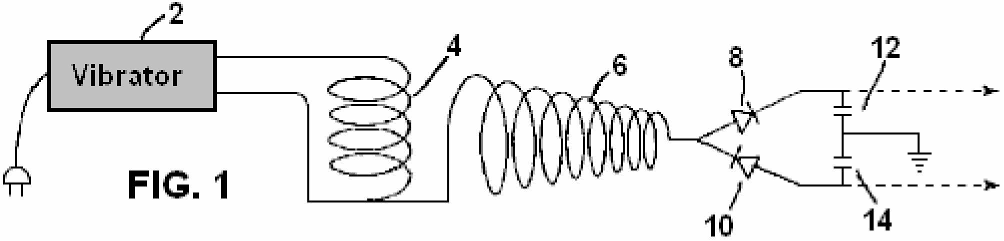

FIG. 1

Fig.2 is a schematic view of a Tesla coil connected to a gold leaf electrometer:

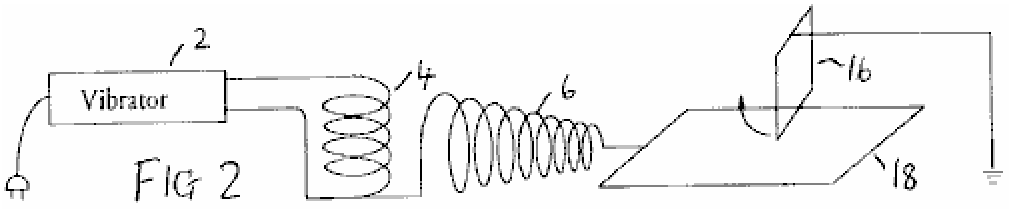

Fig.3 to Fig.6 show alternative electrometer configurations:

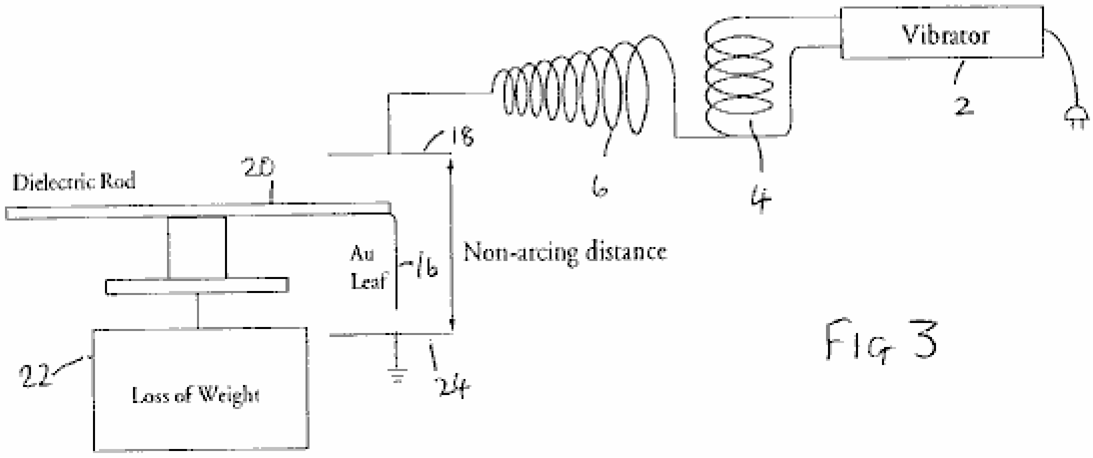

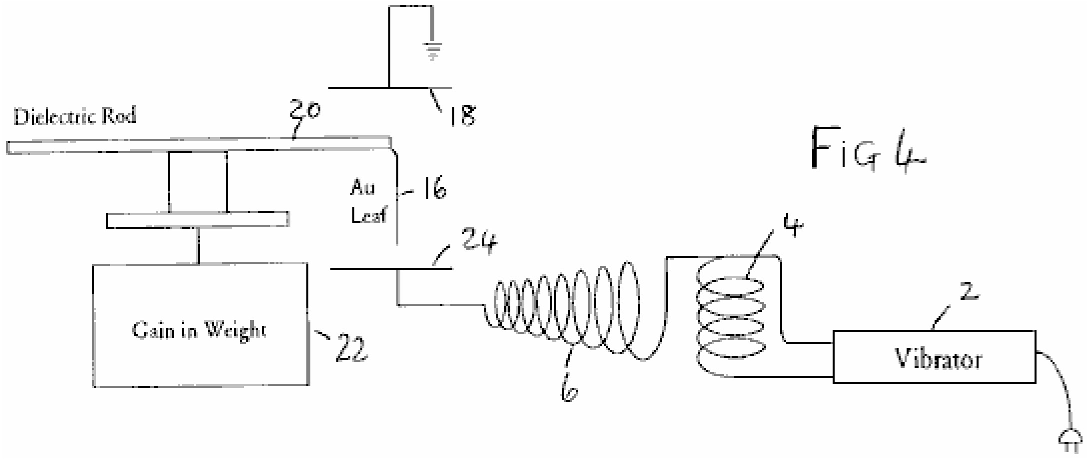

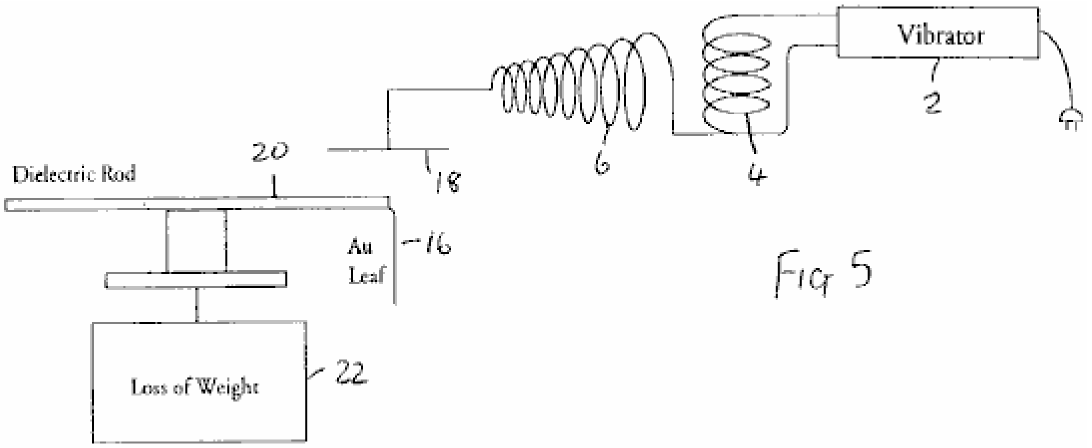

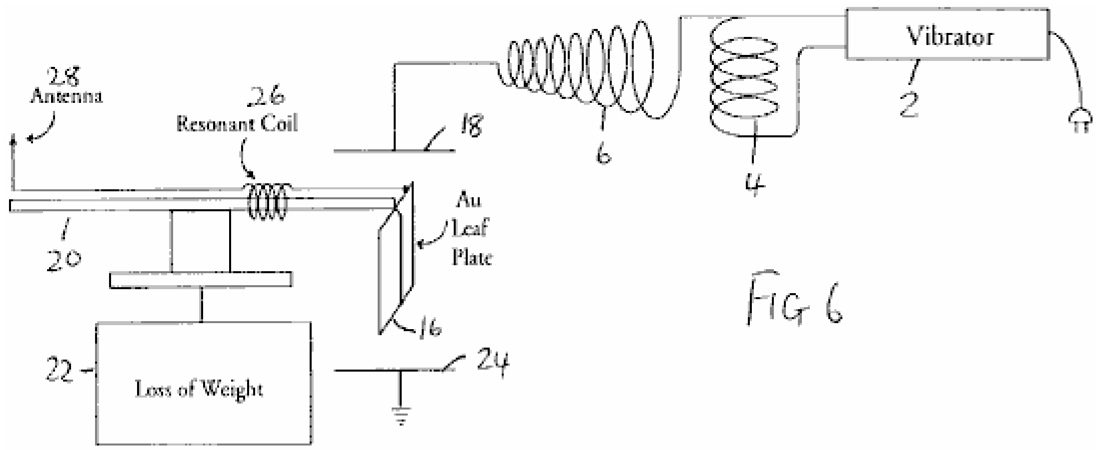

FIG 6

Fig.7 to Fig.11 show modifications of the circuit of **Fig.1**:

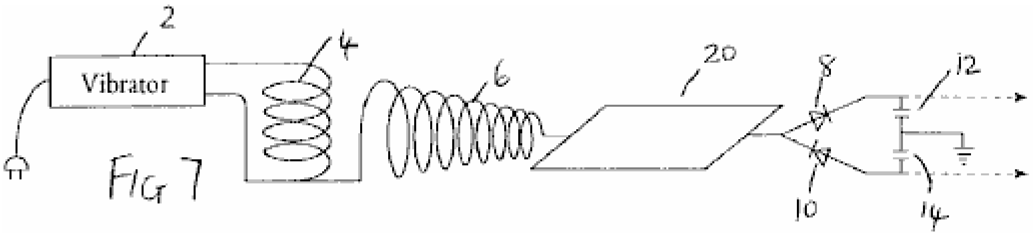

FIG 7

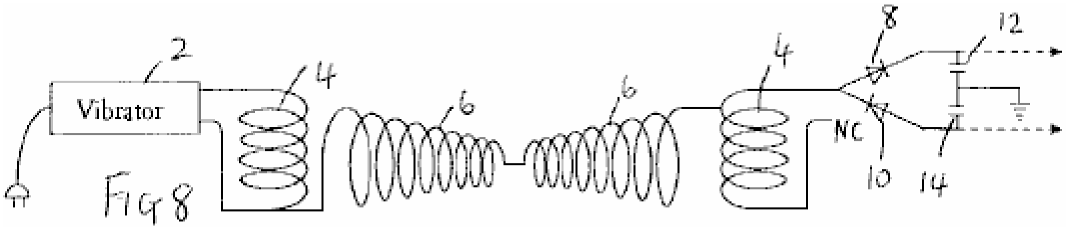

FIG 8

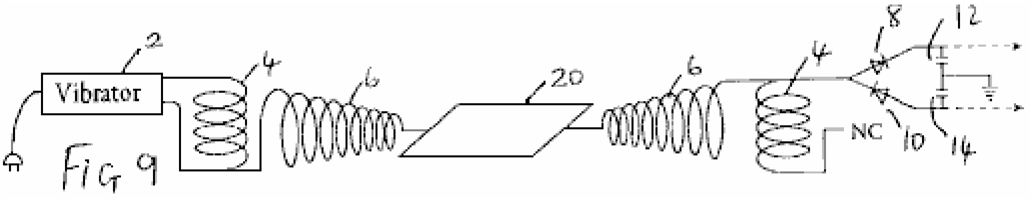

FIG 9

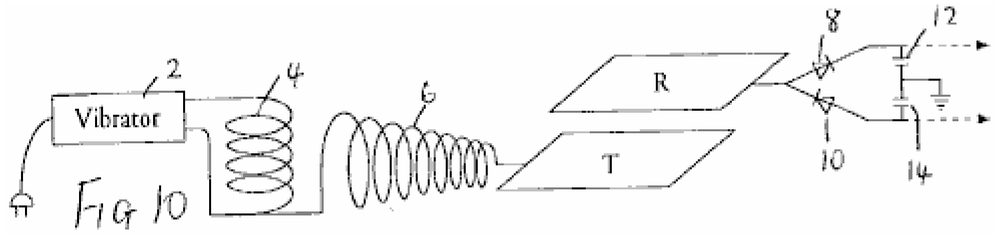

FIG 10

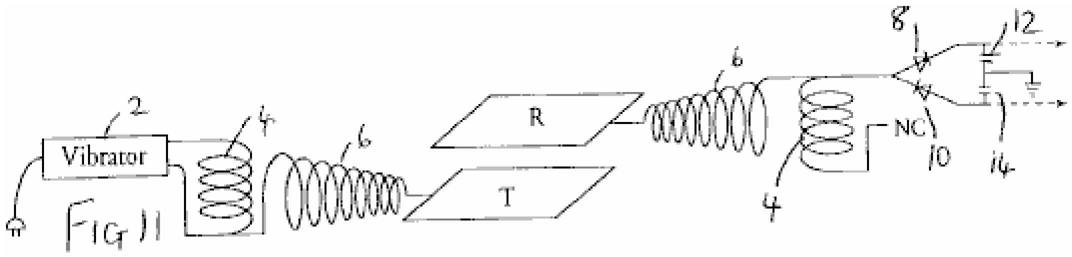

FIG 11

Fig.12 shows apparatus for investigating aspects of the experimental results obtained with the foregoing devices;

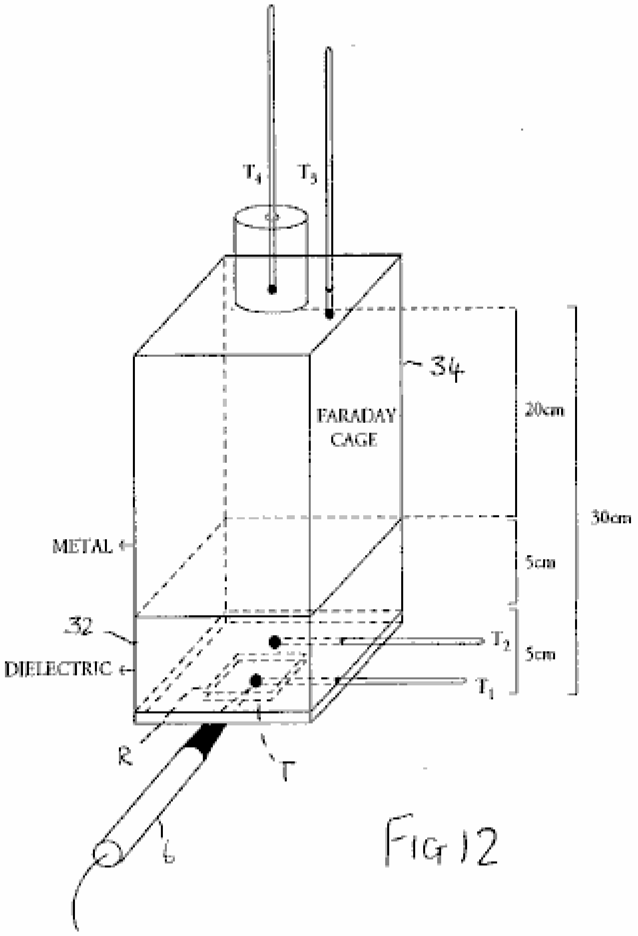

FIG 12

Fig.13 is a graph illustrating results obtained from the apparatus of **Fig.12**:

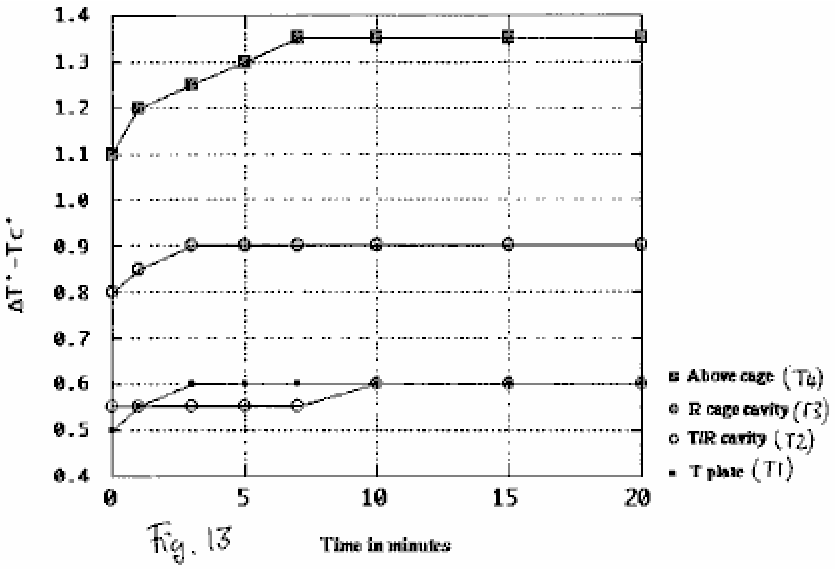

Fig. 13

Fig.14 to Fig.17 show schematic diagrams of embodiments of energy conversion devices:

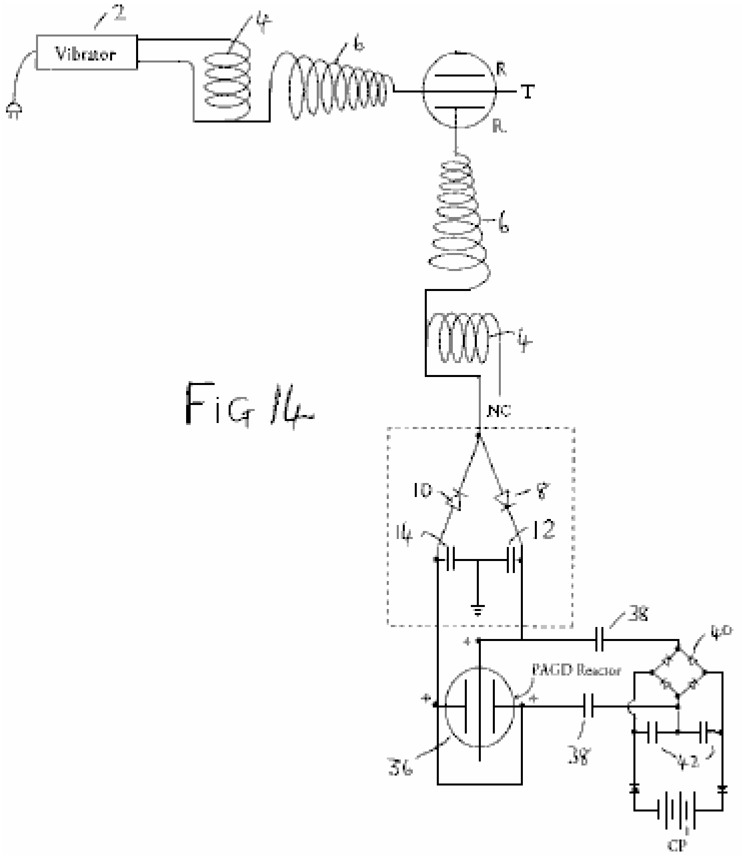

Fig 14

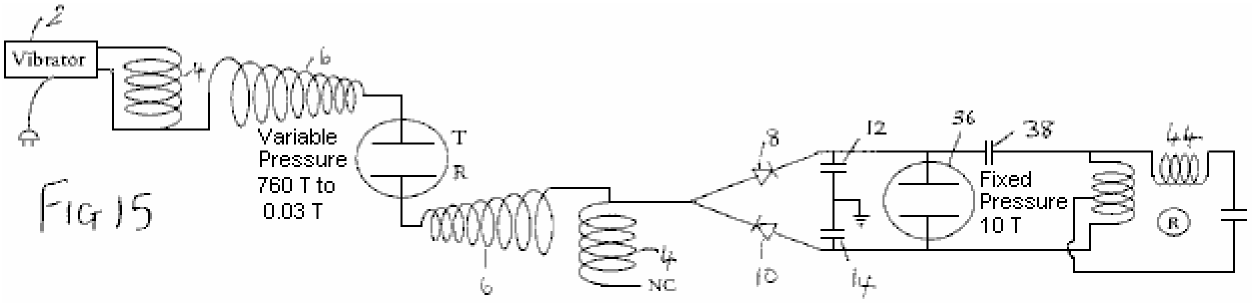

Fig 15

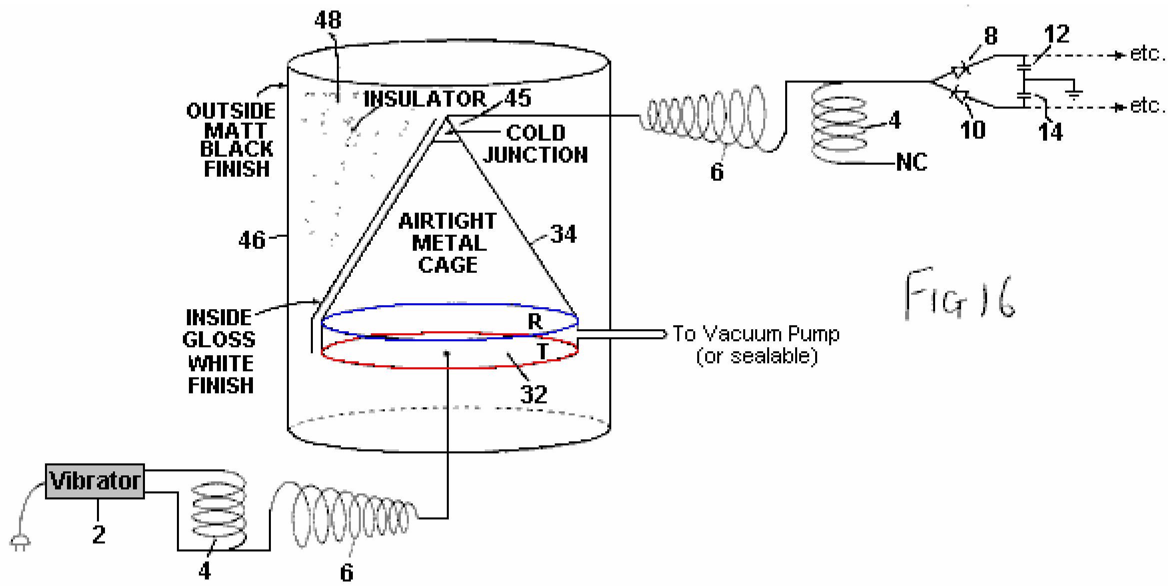

Fig 16

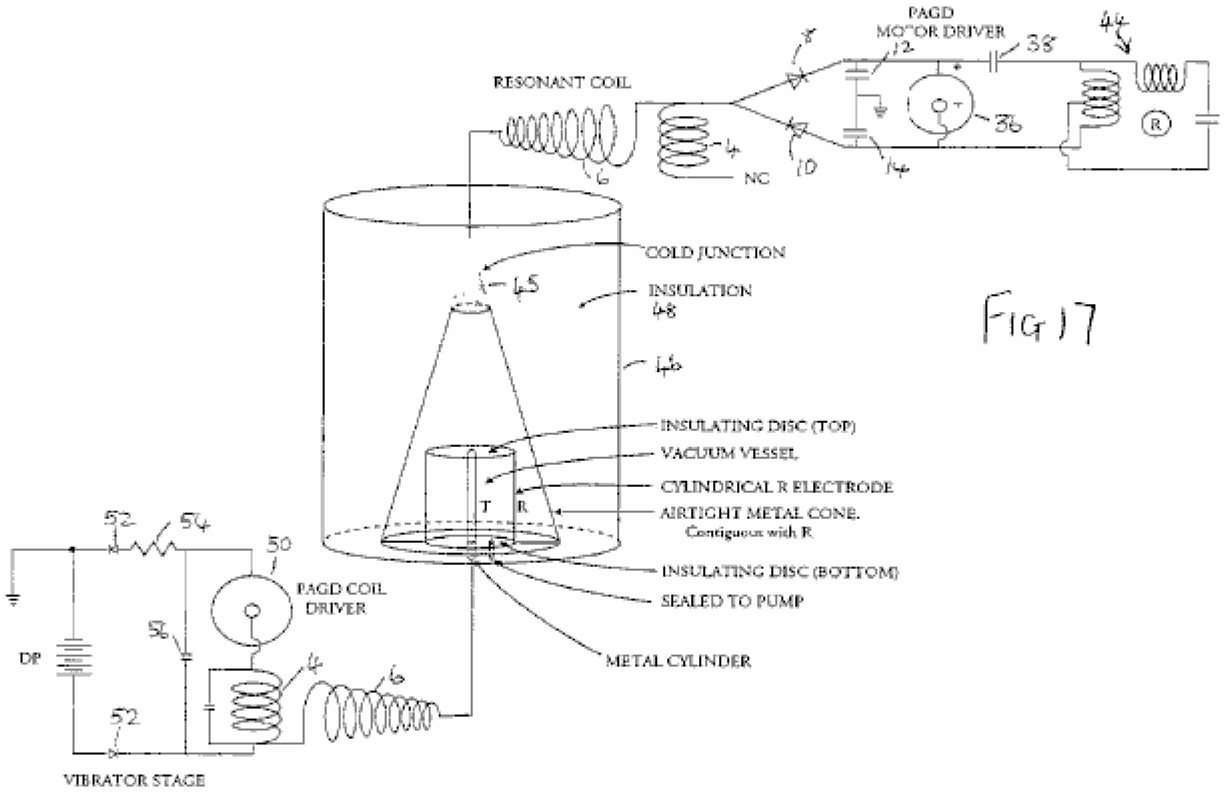

Fig 17

Fig.18 is a diagrammatic cross-section of an inertially dampened drag cup motor:

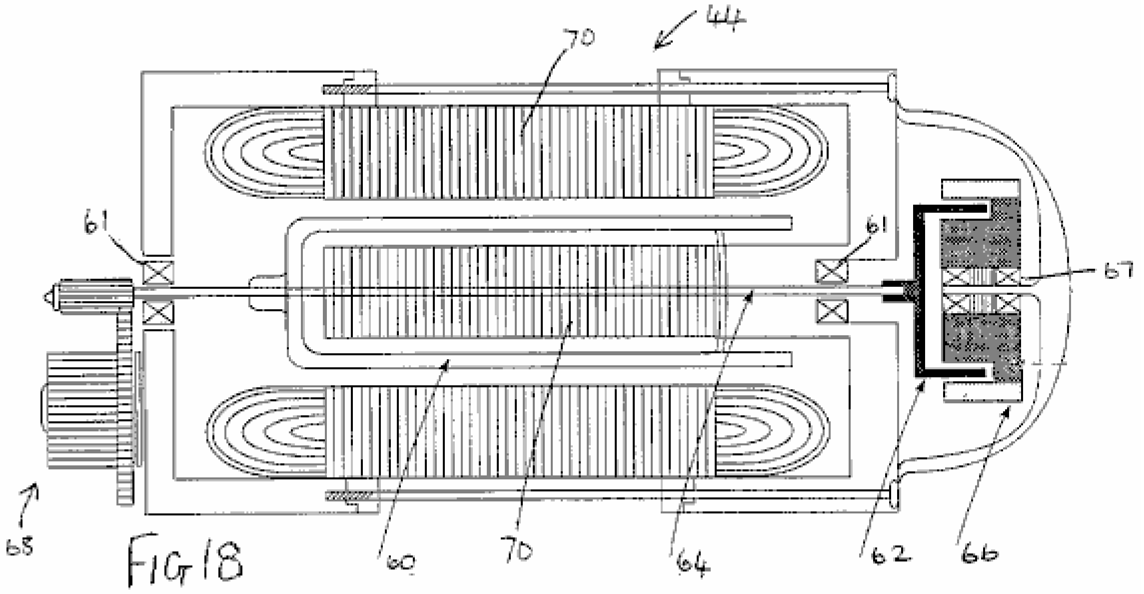

FIG 18

Fig.19 is a schematic diagram of a further embodiment of an energy conversion device incorporating such a motor:

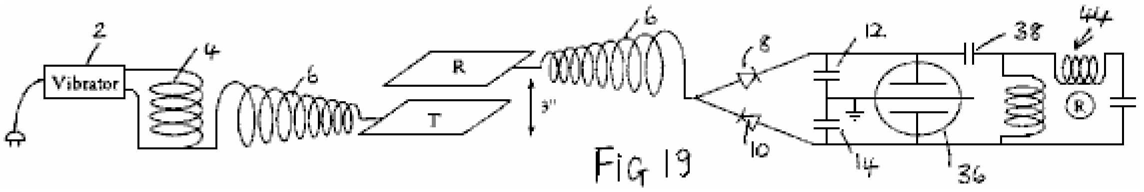

FIG 19

DESCRIPTION OF THE PREFERRED EMBODIMENTS

Based upon observations of weight loss in metallic matter as induced by exposure to high frequency alternating electric fields, we developed an experimental method to optimise this-weight loss, and from this a device that treats the forces causing weight loss as manifestations of intrinsic potential energy ΔU (or true "latent heat") of the molecules of matter, and converts both "true latent heat" energy present in the neighbourhood of a receiver, and "sensible" heat induced within that receiver, into electric energy which can be used to drive a motor, flywheel or charge batteries.

It is commonly believed that the output of the Tesla coil is ionising electromagnetic radiation. We have demonstrated that it is not, i.e. that it is neither electromagnetic radiation, nor ionising electromagnetic radiation. The output of an air-cored, sequentially-wound secondary, consists exclusively of electric energy: upon contact with the coil, a mass-bound AC current can be extracted at the resonant frequency, whilst across a non-sparking gap, mass-free AC-like electric wave radiation having the characteristics of longitudinal waves, can be intercepted anywhere in adjacent space. Accordingly, the radiation output from such coils is different to electromagnetic radiation.

The basic demonstration that the output of a Tesla coil does not consist of ionising radiation, is that it does not accelerate the spontaneous discharge rate of electroscopes, whether positively or negatively charged. In fact, in its immediate periphery, the coil only accelerates the spontaneous discharge rate of the negatively charged electroscope (i.e. the charge leakage rate), whereas it arrests the discharge of the positively charged electroscope (i.e. the charge seepage rate falls to zero). But this dual effect is not due to any emission of positive ions from the secondary, even if it can positively charge a discharged electroscope brought to its proximity. This charging effect is in fact an artifact, in that metals but not dielectrics are ready to lose their conduction and outer valence band electrons when exposed to the mass-free electric radiation of the coil.

This is simply demonstrated by the apparatus of **Fig.1**, in which the outer terminal of the secondary winding **6** of a Tesla coil having a primary winding **4** driven by a vibrator **2** is connected to the input of a full-wave voltage wave divider formed by diodes **8** and **10** and reservoir capacitors **12** and **14** (the same reference numerals are used for similar parts in subsequent diagrams). If the rectifiers employed are non-doped, then the coil appears to only charge the divider at the positive capacitance **10**, but if doped rectifiers are employed, the coil will be observed to charge both capacitances equally. Whereas positive ionises can charge either doped or un-doped dividers positively, no positive ionise can charge a doped divider negatively, clearly demonstrating that the Tesla coil does not emit positive ions.

The basic demonstration that the output of a Tesla coil is not non-ionising electromagnetic radiation of high frequency, such as optical radiation, or of lower frequency, such as thermal photons, is also a simple one. Placement of a sensitive wide spectrum photoelectric cell (capable of detecting radiation to the limits of vacuum UV), wired in the traditional closed circuit manner from a battery supply, at any distance short of sparking from the outer terminal of the coil will show in the dark that the light output from the coil is negligible. This rules out optical radiation at high frequency. The demonstration that the sensible heat output from the Tesla coil is also negligible will be addressed below.

Our theory proposed the existence of physical processes whereby mass-free electric radiation can be converted into electromagnetic radiation. Such a process is at work whenever mass-free electric wave radiation interacts with electrons, such as those that remain in the valence bands of atoms. This mass-free electric energy interacts with charge carriers, such as electrons, to confer on them an electrokinetic energy which they shed in the form of light whenever that electrokinetic energy is dissociated from those carriers (e.g. by deceleration, collision or friction processes). Such a process is at work to a negligible extent in the coil itself and its usual terminal capacitance, hence the faint glow that can be seen to issue from it, but it can also be greatly amplified in the form of a corona discharge by connecting a large area plate to the output of the secondary, as Tesla himself did in his own experiments, and thus by increasing the capacitance of the coil system.

Now, what is interesting in this process is that, in the absence of virtually any I^2R losses at the plate, and if the plate thus introduced is bent at the edges so that it has no pointed edges, or if it is in the form of a bowl, or in any other manner that precludes sparking at edges and specially corners, and thus enhances the corona discharge, any electroscope, whether negatively or positively charged, now brought close to the plate will show a tendency to arrest its spontaneous discharge rate. One might say that this is simply the result obtained in a Faraday cage which disperses charge on its outside and electrically insulates its interior, and indeed if an electroscope is placed inside a Faraday cage no amount of Tesla radiation on the outside of that cage, save direct sparking, adversely affects the leakage or seepage rate of the electroscope. In fact, since the effect of such a cage can be shown to be that of, by itself, inducing arrest of either spontaneous electroscopic discharge, this effect simply remains or is magnified when the cage is bathed by Tesla radiation. However, a cage constitutes an electrically isolated environment, whereas a plate with or without curved or bent edges does not. Furthermore, the change observed in the properties of the output radiation from a Tesla coil when certain metal plates or surfaces are directly connected to the outer terminal of the secondary, takes place whilst the capacitance of the coil is increased by the connected plate, and thus the plate is an electrically active element of the circuit - and hence the opposite of an electrically isolated element.

For a long time, we believed that the anomalous cathode reaction forces observed in autoelectronic discharges (atmospheric sparks, autogenous PAGD (pulsed abnormal glow discharge) and vacuum arc discharges) were exclusive to an autoelectronic emission mechanism prompted by a direct potential between discharging electrodes. Sparking driven by AC potentials could sustain the same forces, but their mutual cancellation over time would not deploy a net force. In this sense, when a large gold leaf connected directly to the ground (via a water pipe or any other suitable connection) or to another large area plate suspended at some height above the ground, is vertically placed at a sparking distance above the surface of another plate connected to the secondary of a Tesla coil, one would not expect the AC spark to sustain any net force across the gap between the gold leaf and the plate. In terms of cathode reaction forces, one would expect their cancellation to be simply brought about by the high frequency of the current alternation in the coil, as both leaf and plate would alternate between being the emitting cathode or the receiving anode. However, this is not what is observed - instead, the gold leaf **16** lifts away from the plate **18** (**Fig.2**). If instead, the suspended gold leaf is connected to the coil terminal, and the bottom plate is connected to the ground in the same manner as described above, this also yields the same result.

Even more curious is the finding that this anomalous reaction force deployed by an alternate current of mass-bound charges in the arc, remains present when the sparking is prevented and instead the corona effect is enhanced (by employing a large plate connected to the outer pole of the secondary, and by employing a distance at which sparking ceases), as if the lift itself were the property of the corona underlying the spark channels and not the property per se of the autoelectronic emission mechanism.

By mounting the suspended leaf **16** (41 mg of hammered 99.9996% pure gold) directly at the end of a long dielectric rod **20** balanced at the centre and placed on a light stand over an electronic balance **22**, we sought to determine the observed lift of the leaf as weight lost. Surprisingly, and despite the most apparent lifting motion of the leaf, the balance registered a substantial weight gain, indicating the addition of 1 to 5 mg weight (with the same 14W input to the vibrator stage), independently of whether the leaf was connected to the terminal of the coil or instead to the earth ground via a water pipe. This suggested to us that, whether formed as a DC or AC spark channel, or whether in the form of a corona discharge, the electric gap develops an expansion force (exactly opposite to a Casimir force) on both electrodes, independently of their polarity, which force is responsible for the observed repulsion. Yet, this expansion goes hand in hand with an increase in their weight such that some other process is at work in that electric gap.

To examine this problem further, we assembled a different experiment where the gold leaf **16** was suspended between two large metal plates **18** and **24** placed 20 cm apart, and the leaf was not electrically connected to them or to any other circuit, while attached to the dielectric rod employed to suspend it over the electronic balance. Given that the leaf is suitably and equally spaced from both plates, there is no arcing between it and either plate. The obvious expectation is that, since the electric field bathing the leaf alternates at high frequency (measured in hundreds of kilohertz), and the corona from both electrodes should equalise and balance any electric wind, no lift should be observed. In fact, no lift is apparent, but a most curious observation is made: depending upon which orientation is employed for the plates, the gold leaf either gains or loses 4-6% of its weight. This gain or loss is registered for as long as the coil is on. If the top plate is grounded and the bottom one connected to the different terminal of the secondary, a gain in weight is observed (**Fig.3**). If the connections are reversed, an equal weight loss is registered (**Fig.4**).

Furthermore, in this last instance, if the grounded plate **24** is entirely removed (**Fig.5**), and only the top plate remains connected to the outer terminal of the secondary, the observed loss of weight continues to occur such that in effect, this reaction can be obtained with unipolar electric fields of high frequency, and it provides a unidirectional force which, once exerted upon metallic objects bathed by its field, can be made to oppose or augment gravity.

Now, these effects can be greatly magnified, in the order of 10-fold, if the same gold leaf is made part of a simple series floating electric circuit where the leaf functions as a large area plate, and is wired in series with a coil **26** which, for best results, should be wound so as to be of a length resonant with the secondary of the Tesla-type coil employed; and this coil is connected in turn to a point antenna **28** upwardly oriented (**Fig.6**). The entire floating circuit is mounted on the rod **20** and this in turn, is mounted over the sensitive balance. If both plates are kept as in **Fig.3** and **Fig.4**, the observed weight loss and weight gain both vary between 30% and 95% of the total weight of the leaf. Again, the gain or loss of weight is registered for as long as the coil is on.

These anomalous findings suggested that, whatever is the nature of the energy responsible for the force observed in that high frequency alternating current gap, any metallic object placed in that gap will experience a force repelling it from the electric ground. This force will be maximised if the gap frequency is tuned to the elementary or molecular structure of the metallic object. If the electric ground is placed opposite the actual plane of the earth ground, that force will act in the direction of gravity. If, instead, the electric ground and the earth ground are made to coincide on the same plane, that force will act opposite the direction of gravity, i.e. will repel the metallic object from the ground.

No such weight alteration was observed with solid dielectrics, for instance with polyethylene and other thermoplastic sheets.

These facts rule out the possibility of a hidden electrostatic attraction force, acting between the plate connected to the different terminal of the secondary and the gold leaf. Firstly, such an attraction would be able to lift the gold leaf entirely, as is easily observed with the unipole of any electrostatic generator operating with a few milliwatts output with either negative or positive polarity; secondly, the same attraction, if it existed and were the product of an electric force, would surely be manifested independently from whether the experimental leaf was metallic or a dielectric (as again is observed with electrostatic generators).

The results suggest therefore, that whenever a large plate is connected to a Tesla-type coil, it induces in surrounding matter that is not part of its own circuit, a directional thrust which is oriented in a direction which is opposite to the electric ground and, if the electrical ground is on the same side as the surface of the Earth, then a thrust is produced which opposes gravity.

When this thrust is made to oppose gravity, we believe that its effect upon the gold leaf can be compared to the lifting power imparted to the water molecule when it transits from the liquid to the vapour state and which is associated with the increase in internal (or intrinsic) potential “thermal” energy ΔU (See Halliday D & ResnickR (1978) "Physics", Vol. 1, section 22-8, p. 489). The "specific latent heat" of water (m*L) contains indeed both an expression for the sensible radiant thermal work involving volume and pressure relations:
$W = P(V_V-V_L)$ where P = a pressure of 1 atmosphere, and V_V and V_L are the molar volumes in the vapour and liquid phases respectively, and an expression for a quantity of "latent" energy (ΔU) which is associated with the molecule in the more rarefied state. Hence, the relation for the latter with respect to water vapour is: $\Delta U = mL - P(V_V-V_L)$

We propose that likewise, if a very small portion of the energy of the mass-free electric waves is indirectly transformed by mass-bound charge carriers on that plate into blackbody photons (once those charge carriers shed their electrokinetic energy), the greater portion of those waves are directly transformed in the space adjacent to that plate into the latent energy equivalent to ΔU for the atoms of the surrounding air, and so on, until this process itself is also occurring for the atoms of that gold leaf, thus inducing their non-electrical weight loss and suggesting the existence of a non-thermal "antigravitokinetic" energy term previously unknown to mankind other than as "latent heat" or "internal potential energy".

From this viewpoint, the energy released by any Tesla-type coil to its surroundings, would be tantamount to a radiative injection of "internal potential energy" which would confer on local gas molecules a weight cancellation (a cancellation of gravitational mass occurring in the absence of any cancellation of inertial mass - a process which the inventors theorise is explained by the neutralisation of elementary gravitons), and the same process would be equally at work for metallic solids but not dielectric solids.

Gold vapour also deploys a substantial intrinsic potential energy. With an enthalpy of vaporisation on the order of H_V = 324 kJ mol^{-1}, the molar volumetric work performed by gold vapour at atmospheric pressure at the temperature of vaporisation T_v (2,856^{0}C., i.e. 3,129 degrees Kelvin) is:

$W = P\Delta V_{V-L}$ = 23.58 kJ $mol.^{-1}$ where ΔV_{V-L} = 0.2327m^3. The intrinsic potential energy of gold vapour is then given by:

$\Delta U = H_v - W$ = 300.4 kJ $mol.^{-1}$ i.e. 12.74 times greater than the volumetric work performed during the phase transition.

It is our contention that this intrinsic potential energy, associated with molecules as their "latent heat", has fine structure that in turn is altered if this energy is released from these molecules and fails to gain a "sensible" thermal form. What is suggested is that the fine structure of "latent heat" is not electromagnetic and obeys instead the molecular function:

$\Delta U / N_A = \lambda_{n2}{}^2 c \, f_{n2}$ where N_A is Avogadro's number, the wavelength denoted as λ_{n2} is the wavelength-equivalent of the mass of the molecule to which the "latent heat" is associated, obtained by a conversion method proposed in these inventors' theory, and the frequency term f is a non-electromagnetic frequency term, specifically in this case a gravitational frequency function.

Employing the conversion of Joules into m^3 sec^{-2} proposed by these inventors as being exactly:

1J = 10 N_A m^3 sec^{-2}, and putting the wavelength λ_{n2} down as the wavelength-equivalent of the mass of the gold atom, λ_{Au}, at 1.9698 m, that frequency term f_{n2} can be obtained as being equal to 2.6 x 10^{-3} sec^{-1}.

According to the present inventors' theory, the wave function c constitutive of the fine structure of "latent heat" associated with molecules of matter, carries the same wavelength λ_{Au} and its frequency is given in the usual manner by c/λ_{Au} = 1.52 x 103 sec^{-1}. The resultant frequency for the non-Planckian unit quantum of "latent energy" associated with each gold atom at the vaporisation temperature is then obtained by the geometric mean of the two synchronous frequency terms: $[(c/\lambda_{Au}) \, f_{n2}]^{0.5}$ = 624 Hz. However, this is the signature of that intrinsic potential energy when associated with that gold atom at its vaporisation temperature. It is not the signature of the energy quantum itself if it is released from that molecule, nor prior to being absorbed (i.e. in transit), at that same temperature.

The fine structure of the same non-Planckian "latent" energy quantum varies to encompass different determinations of the constituent wavelength and frequency functions. The basic relation for the determination of the wavelength of a "latent thermal" energy quantum not associated with matter, but corresponding to one that is, is:

$\lambda_{n1} = [(\Delta U / N_A) / c]^{0.666}$ $meters^{-0.333}$ $seconds^{0.666}$

which gives 0.046478 m for the unbound equivalent of the "latent heat" unit quantum of vaporisation associated with the gold atom at a pressure of one atmosphere. The fine structure of the free quantum is still parallel, as given by:

$\Delta U / N_A = \lambda_{n1}{}^2 c f_{n1}$

but now notice how the frequency terms have changed value, with the f_{n1} function having the value 4.65 sec^{-1} and c / λ_{n1} yielding 6.48 x 10^{9} sec^{-1}. The geometric mean of the superimposition of the two frequencies is then:

$[(c / \lambda_{n1}^2) f_{n1}]^{0.5}$ = 173.7 KHz

We contend that it is at this frequency that the atoms of gold vapour absorb "latent heat".

However, this is just the overall scenario of what happens at the temperature of vaporisation of gold. But at room temperature (e.g. 293 degrees Kelvin), and with respect to processes where there is no sublimation of the atoms of that gold leaf under way (and indeed, once the coil is turned off, the leaf returns to its normal weight), one must infer to a different phase of matter what portion of "latent heat" energy, if any, do the atoms of gold hold in the solid phase lattice. Assuming the same proportionality between the "sensible" and "latent" thermal energy terms for atoms of gold at room temperature, where the unit thermal energy is N_AkT = 2.436 kJ mol^{-1}, we speculate that the gold atom could absorb up to 12.74 times the value of this "sensible" thermal energy, and thus hold N_AkT = 31.053 kJ more energy in its own micro-atmosphere.

If this speculation is correct, and employing the above novel methodology, then the mean geometric frequency of the maximal "latent heat" energy quantum of a gold atom at room temperature would be 538 KHz (versus 174 KHz at the vaporisation temperature), and once absorbed its mean frequency mode would reduce to 201.5 Hz (versus 630 Hz once the atom has vaporised).

To test this hypothesis, we employed two different Tesla-type coils having output frequencies of 200 KHz and 394 KHz. The circuit tested was that shown in **Fig.6**, and both coils were operated at 50 KV outputs. Whereas the former coil, closer to the 174 KHz marker, could only systematically produce 10mg to 11 mg of weight cancellation in the gold leaf of the floating circuit, the second coil, closer to the speculated 538 KHz marker, could produce 15mg to 35 mg of weight cancellation in the same gold leaf. The empirical results appear therefore to suggest that our speculation may well be a valid one.

The above-mentioned full wave divider (see **Fig.1**) can be easily coupled to our autogenous Pulsed Abnormal Glow Discharge technology as described in our U.S. Pat. No. 5,416,391 to form an alternative source of direct current, ultimately powered by Tesla waves, and such a drive can equally be applied to any other vacuum device that can sustain endogenous oscillatory discharges, whether in the PAGD regime or any other pulsatory regime. For the purposes of experimental and visual determination of power outputs from the divider in question, we have utilised either 2 Torr vacuum tubes operating in the high-current PAGD regime, or 20-100 Torr spark tubes requiring high voltages (2 to 10 KV) for their spark breakdown. As taught in the above US Patent, the output from the full wave voltage divider can be assessed by the energy spent in driving the tube and the motor, whose rotary speed is proportional, within the limits chosen, to the power input.

Two separate sets of experiments presented in Table 1 below, showed that direct connection of the wave divider to the outer terminal of the coil (set constantly at 6 clicks on the vibrator stage in **Fig.1**) or to the same terminal but across a large (2 or 3 square feet) plate **30** that increased the capacitance of the secondary (**Fig.7**), presented the same power output in either case (the effect of the plate is to lower the voltage of the output proportional to the increase in current). A substantial increase in power output through the divider is observed only when an identically wound Tesla coil is connected in reverse (**Fig.8**) with the non-common end of its winding **4** not connected, in order to obtain a condition of resonance, and this observed increase is further augmented by now interposing either of the metal plates **18**, **24** between the two chirally connected and identical coils (**Fig.9**). The increase in plate area appears to have the effect of increasing the output for as long as the plate is isolated between the two chiral image coils. Throughout these experiments, the input power to the vibrator was fixed at 14W (60 Hz AC). [Note: ‘Chirality’, or ‘handedness’, is a property of objects which are not symmetrical. Chiral objects have a unique three-dimensional shape and as a result a chiral object and its mirror image are not completely identical - PJK].

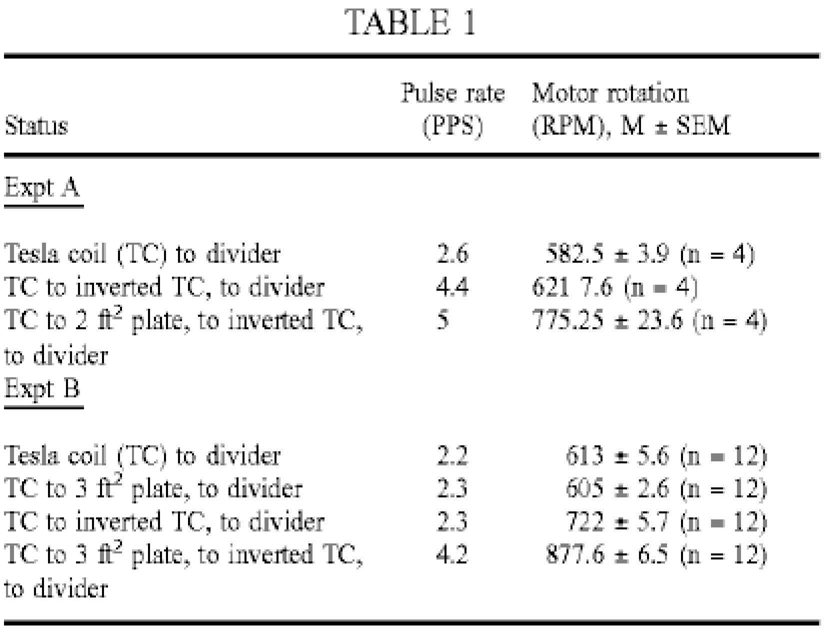

TABLE 1

Status	Pulse rate (PPS)	Motor rotation (RPM), M ± SEM
Expt A		
Tesla coil (TC) to divider	2.6	582.5 ± 3.9 (n = 4)
TC to inverted TC, to divider	4.4	621 7.6 (n = 4)
TC to 2 ft^2 plate, to inverted TC, to divider	5	775.25 ± 23.6 (n = 4)
Expt B		
Tesla coil (TC) to divider	2.2	613 ± 5.6 (n = 12)
TC to 3 ft^2 plate, to divider	2.3	605 ± 2.6 (n = 12)
TC to inverted TC, to divider	2.3	722 ± 5.7 (n = 12)
TC to 3 ft^2 plate, to inverted TC, to divider	4.2	877.6 ± 6.5 (n = 12)

In our loss of weight experiments described above, we noted that the phenomenon of weight loss by a metallic body placed in proximity of the coil output continued to be observed when only the plate connected to the distal pole of the secondary was retained. The leaf, although not part of the circuit of the secondary, could however be seen as part of a circuit for the capture of ambient radiant energy, specifically that generated by the coil and, as well, that also possibly picked up, in the process, from other ambient sources. To determine whether the last consideration is a possibility at all, or whether the energy picked up by an analogue of our metallic body or gold leaf in the experiments described above, is entirely a by-product of the energy transmitted by the plate connected to the outer pole of the secondary, we next determined what would happen if the pick-up for the full-wave divider were placed, not at the output from the secondary coil, but from an, in all respects identical, plate (the Receiver plate **R**, as opposed to the Transmitter plate **T**) placed a distance away from, and above, the first one. In other words, the gold leaf is replaced by a receiver plate, and this carries an attached test circuit identical to the test circuit employed to directly assess the coil output.

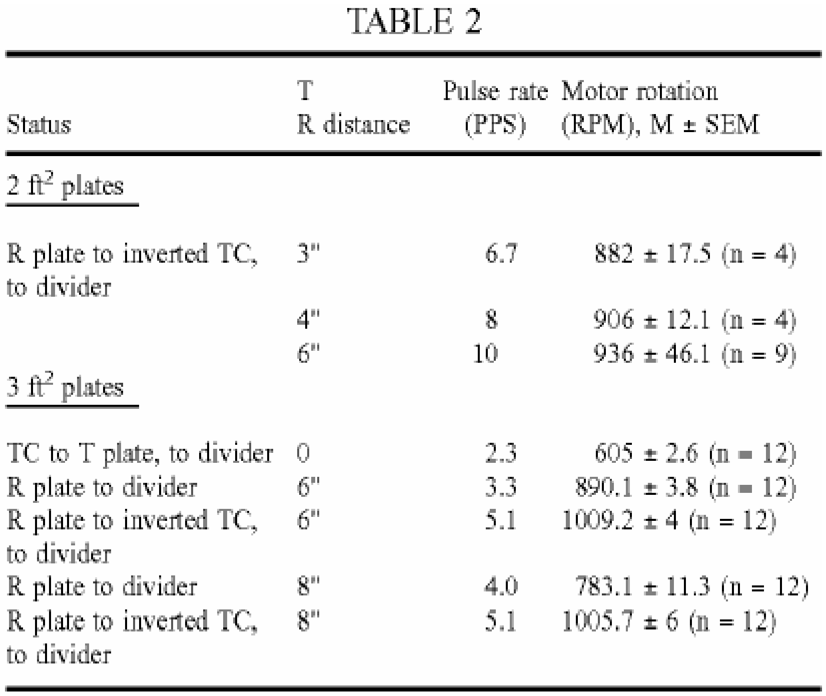

TABLE 2

Status	T R distance	Pulse rate (PPS)	Motor rotation (RPM), M ± SEM
2 ft^2 plates			
R plate to inverted TC, to divider	3"	6.7	882 ± 17.5 (n = 4)
	4"	8	906 ± 12.1 (n = 4)
	6"	10	936 ± 46.1 (n = 9)
3 ft^2 plates			
TC to T plate, to divider	0	2.3	605 ± 2.6 (n = 12)
R plate to divider	6"	3.3	890.1 ± 3.8 (n = 12)
R plate to inverted TC, to divider	6"	5.1	1009.2 ± 4 (n = 12)
R plate to divider	8"	4.0	783.1 ± 11.3 (n = 12)
R plate to inverted TC, to divider	8"	5.1	1005.7 ± 6 (n = 12)

As shown in Table 2 above, the results of the experiment show that there is no loss of energy picked up at the **R** plate (**Fig.10**) when compared to the most favourable situation involving the plate **30** (**Fig.9**) interposed between the chirally connected coils. This observation is however not always the case. For best results one should employ iron, gold or silver plates placed parallel to the horizon, with the **T** plate underneath the **R** plate. In fact, if one employs instead aluminium plates and suspends these vertically, one can consistently register a loss of output at the divider when changing the divider input from the **T** to the **R** plates.

If however the plate **R** is connected in turn to a second identical coil, also wired in reverse, and this second coil in turn serves as input to the full-wave divider (**Fig.11**), then a most curious occurrence takes place - the power output increases considerably (see Table 2), as if the divider circuit had undergone an energy injection not present at the source. Note that the circuits are in fact resonant, but the energy injection contributing nearly 60-66% (for both plate areas in the previous experiment) of the input that we refer to, is not caused by inductive resonance, since the effect of resonance can be ascribed to the set-up described in **Fig.9**. The distance between the plates, as well as their orientation with respect to the local horizon system of the observer also appear to matter, best results being achieved at optimal distances (e.g. for 2 square feet plates the best gap, at 43% RH and room temperature, was at least 6 inches).

We tested the possibility that environmental heat produced by operation of the coil might be the source of the injected energy, the plate of the second system acting possibly as collector for the heat present in the gap. As it turned out, experiments showed repeatedly that in the gap between the **T** and **R** plates there was no significant thermal radiation propagating between one and the other. The more illustrative experiments are those in which we identified where the sensible thermal energy appears, and which involved coupling two cavities: the Transmitter-Receiver gap between plates **T** and **R**, and a Faraday cage enclosure **34** (see **Fig.12**). The first cavity appears to be much like that of a capacitor: the two identical parallel plates are surrounded by a thick dielectric insulator **32**, and a thermometer **T2** is inserted half-way through it. A thermometer **T1** is also fixed to the **T** plate, to measure it's temperature. The second cavity is a simple insulated metal cage with a thermometer **T3** inserted 2 cm into its top. Some 2-4 cm above the top of the cage there is placed a fourth thermometer **T4**, inside an insulated cylinder.

If the Tesla Coil is a source of thermal energy (e.g. IR radiation, microwaves, etc.) we would expect the **T** plate to be the hottest element from which, by radiation, thermal energy would reach the middle of the first cavity making the next thermometer **T2** second hottest, and that the third thermometer **T3** inside the second cavity, even if it might initially be slightly warmer than the other two, would, over time, become comparatively cooler than either one of the other two thermometers, despite the fact that the rising heat would still be seen to warm it up over time. One would expect a similar outcome for the fourth thermometer **T4**, above the cage. As shown by **Fig.13**, where only the temperature differences (ΔT^0 - $T_C{}^0$) between the experimental thermometers and the control thermometer reading the air temperature $T_C{}^0$ of the laboratory are shown, the surface of the **T** plate warms up by 0.1^0C. at 3 minutes after initiation of the run (closed squares), whereas in the space of the T/R gap a diminutive warming, by 0.05^0C., is registered after 10 minutes (open circles). Conversely, the temperature inside the cage, at the top (shaded circles) rises by 0.1^0C. also by the third minute, and the temperature above the cage itself (shaded squares) rises by a much greater difference of 0.35^0C., which remains stable after the eighth minute.

These results show that it is not sensible heat that radiates from the **T** plate. Instead, some other form of radiation traverses these cavities to generate sensible heat at their metallic boundaries, such that more heat is generated above the **R** plate (inside the cage) and again above the third plate, i.e. above the top of the cage, than is generated in the T/R gap, i.e. near the **T** plate. This clearly shows that the Tesla coil is not a significant source of thermal radiation, and that sensible heat can be detected inside and on top of the Faraday cage only as a further transformation of the radiant energy transmitted across the T/R cavity.

The same experiment also illustrates that, whatever is the nature of the additional environmental energy being injected at the surface of **R** plate (as shown by Table 2 results above), it is most likely not thermal radiation, at least not energy in the form of sensible heat. And whatever is the nature of this ambient radiant energy being mobilised by the electric radiant energy transmitted from the **T** plate, it can produce significant heat inside an enclosure adjacent to plate **R**.

Since we also know experimentally, that this observation of an ambient energy injection at the **R** plate or **R** cage depends upon relative humidity, being most easily observable when the latter is low (<50% Relative Humidity), and being virtually impossible to observe when air is saturated with water vapour, we can infer that water vapour is a good absorber of the electric mass-free radiant energy emitted from the **T** plate. This strongly suggests that this absorption process is tantamount to increasing the potential intrinsic energy ΔU of the water vapour molecules adjacent to the **T** plate. In the absence of significant quantities of water vapour, when the atmosphere is dry, one may speculate that this absorption process is replaced by what one presumes is a parallel process involving the various gaseous molecules of air. However, either because the air molecules involve molecular species that readily give off this potential energy, as one might speculate is the case with molecular oxygen, hydrogen and nitrogen, or because the air molecules absorb far less "latent" energy (as appears to be the case with inert gases), and therefore there is more of it in the molecularly unbound state (as we explicitly propose as a possibility) and thus available for absorption by the appropriately tuned receiver, the increased ΔU of air molecules conferred by the absorption of the mass-free electric radiation in the T/R gap is transferred to the **R** conductor together with the latent energy which those molecules already possessed before entering that gap. Hence the energy injection and its dependency upon the partial pressure of water vapour, which absconds instead with this "latent" energy and succeeds in withholding it from transmission to the **R** plate.

If the T/R gap can mobilise ambient energy which is neither electromagnetic nor thermal in nature, but which "latent" energy becomes injected into the divider circuit in electric form, the heat (i.e. sensible thermal energy) produced inside and on top of the cage, can also be mobilised electrically as input into the divider circuit. The obvious place to look for the positioning of the cool junction which could convert sensible heat into electrokinetic energy of mass-bound charges is at the top of the cage, where it is warmest (See top curve of **Fig.13** in shaded squares). This is clearly observed from the results shown in Table 3 below, where the initial temperature difference between the top of the box and the **T** plate surface was 0.5^{0}C., and the top of the box temperature rose by 0.2^{0}C. after 2.5 minutes when the divider was connected at the junction, versus 0.35^{0}C. when it was not (and the transmitter coil was on).

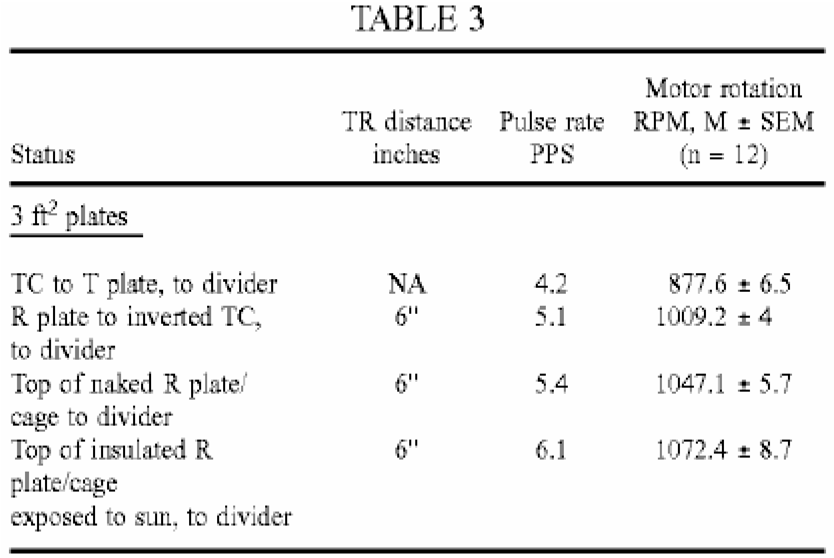

TABLE 3

Status	TR distance inches	Pulse rate PPS	Motor rotation RPM, M ± SEM (n = 12)
3 ft^2 plates			
TC to T plate, to divider	NA	4.2	877.6 ± 6.5
R plate to inverted TC, to divider	6"	5.1	1009.2 ± 4
Top of naked R plate/ cage to divider	6"	5.4	1047.1 ± 5.7
Top of insulated R plate/cage exposed to sun, to divider	6"	6.1	1072.4 ± 8.7

For the run performed with the naked **R** cage, the temperature directly above the top of the cage was 24.3^{0}C., at the outset, versus the control room temperature of 23.9^{0}C. For the run performed with the insulated **R** cage exposed directly to the sun at midday, on a cool and clear August day, the temperature directly above the top of the cage was 33^{0}C., versus the control air temperature of 18.4^{0}C. The temperature of the cool junction at the top of the cage was 31.9^{0}C. while the run was performed.

It is apparent from the data of Table 3, how a second injection of energy has occurred in the apparatus. If, within the T/R gap, the energy injected appears to be on the order of absorption of "latent heat", at the top of the cage cavity, at the cool junction, the injection is one of radiant "sensible" heat. Moreover, this secondary energy addition could be further enhanced by placing strong insulation around the whole apparatus or the cage itself, and further so, by exposing the whole apparatus to solar radiation.

We next turned our attention to the T/R gap cavity with the intention of determining whether atmospheric conditions or vacua yield the same or different results. We could not, of course, test the same large area plates as have been employed for the studies undertaken at atmospheric pressures. For the present purpose we employed instead large area electrodes (ca 0.2 ft^{2}) made of high grade stainless steel or even aluminium. Preliminary results showed that these T/R gap tubes, when coupled to the divider circuit, yielded faster pulse rates in the secondary circuit when evacuated than at atmospheric pressure. The strength of the corona discharge also intensified, as it eventually became replaced by a normal glow discharge. For purposes of improved spatial capture of (1) the electric mass-free energy radiated from the **T** electrode and (2) the non-radiant latent thermal energy mobilised by it to be collected electrically at the **R** plate, an axial cylindrical T electrode was inserted inside a larger concentric cylinder or between two common plates of large surface area (e.g. >100 cm^{2}) functioning as the **R** electrode(s), in a dielectric container suitable for evacuation (glass, polycarbonate), at a typical distance of at least 3 cm between electrodes, and the entire device was tested at different pressures.

The secondary circuit connected downstream from the full-wave divider was as shown in **Fig.14** (employing an autogenous pulsed abnormal glow discharge, or PAGD, converter circuit), with the PAGD reactor **36** set at 10 Torr (in light of the high-voltage input, which varied between 1,500V and 3,200V) and gave the results presented in Table 4 below. We should remark also that these pulses charged the charge pack **CP** through the coupling capacitors **38**, bridge rectifier **40** and reservoir capacitors **42**, and blocking diodes **44**, as expected from the prior art represented by our patents related to PAGD devices.

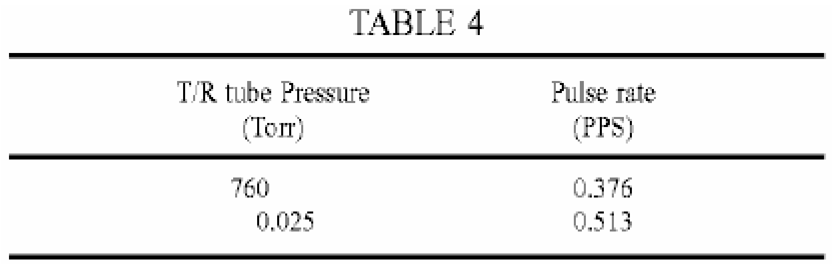

TABLE 4

T/R tube Pressure (Torr)	Pulse rate (PPS)
760	0.376
0.025	0.513

The effect of the vacuum in the T/R gap tube seems to be dual. By transforming the corona discharge into a normal glow discharge, it increases the local production of photons (probably associated to the formation and discharge of metastable states in the plasma), and at the same time, increases the pulse rate in the output circuit and thus, in all probability, the energy injected in the T/R gap cavity. But this did not yet permit us to confirm whether or not it is "latent heat" energy of the plasma molecules which is being tapped at the receiver plate, even if it be plausible in principle that plasmas may effect more efficient transfer of "latent heat" to tuned receivers than atmospheric gases.

The vacuum dependency of the pulse rate of the PAGD reactor employed as example in the secondary circuit downstream from the divider is also rather well marked, with the fastest pulse rates being registered at 1 Torr for the sample run shown in Table 5 below.

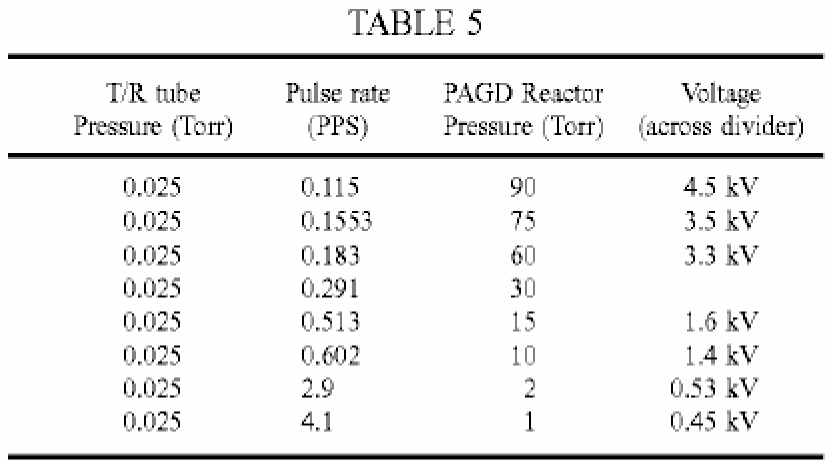

TABLE 5

T/R tube Pressure (Torr)	Pulse rate (PPS)	PAGD Reactor Pressure (Torr)	Voltage (across divider)
0.025	0.115	90	4.5 kV
0.025	0.1553	75	3.5 kV
0.025	0.183	60	3.3 kV
0.025	0.291	30	
0.025	0.513	15	1.6 kV
0.025	0.602	10	1.4 kV
0.025	2.9	2	0.53 kV
0.025	4.1	1	0.45 kV

It is worth noting here that the illustrated polarity of the wiring of the PAGD reactor tube, as shown in **Fig.14**, is best for purposes of sustaining regular auto-electronic emission at high voltage. The reverse configuration, with the centre electrode negative and the plates positive favours instead heating of the cathode and a lapse into a normal glow discharge.

We tested a similar arrangement to that shown in **Fig.14** above, but with a PAGD motor circuit (see our U.S. Pat. No. 5,416,391). A split-phase motor **44** replaces the rectifier and charge pack, and the PAGD reactor is operated at the same pressure of 15 Torr, as shown in **Fig.15**. The T/R gap tube tested had a longer plate distance (2"), with one plate now functioning as Transmitter and the other as Receiver. Note also the different wiring of the PAGD reactor. The results, as shown below in Table 6, present pulse per second (PPS) and motor revolutions per minute (RPM) curve trends that appear to be analogous and parallel to the well known Paschen curves for breakdown voltage in vacuum - such that the T/R gap performs better either in the atmospheric corona discharge mode, or in the high vacuum normal glow discharge (NGD) mode, than in the low breakdown voltage range of the curve where the discharge forms a narrow channel and takes on the appearance of an "aurora" transitional region discharge (TRD).

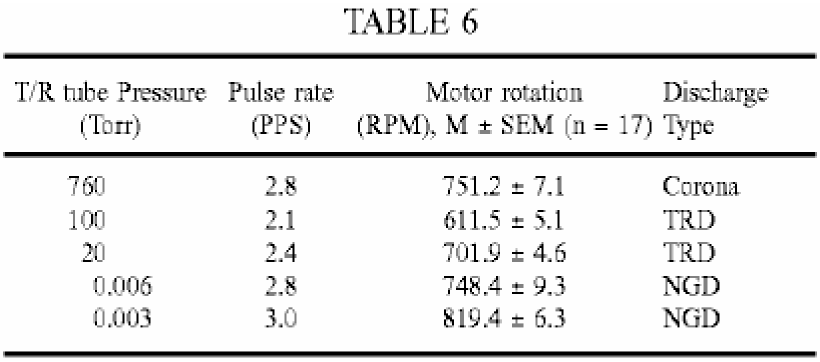

TABLE 6

T/R tube Pressure (Torr)	Pulse rate (PPS)	Motor rotation (RPM), M ± SEM (n = 17)	Discharge Type
760	2.8	751.2 ± 7.1	Corona
100	2.1	611.5 ± 5.1	TRD
20	2.4	701.9 ± 4.6	TRD
0.006	2.8	748.4 ± 9.3	NGD
0.003	3.0	819.4 ± 6.3	NGD

These results suggest that plasmas with high lateral dispersion, i.e. formed over large electrode areas (e.g. corona and NGD plasmas) and thus devoid of pinch, are more likely to mobilise electrically, the intrinsic potential energy of the molecular charges than pinch plasmas appear to be able to do (e.g. TRD plasmas). Apparently also, the greater the vacuum drawn from the T/R gap cavity, the more efficient does the transfer of this intrinsic potential energy become, i.e. the mass-bound latent heat, to the electrokinetic energy of the charges circulating in the receiver circuit. At about 0.06 Torr, this transfer in vacuo is comparable to that observed under atmospheric conditions and thus for a much greater density of molecules.

We investigated whether it Is possible to tap the latent heat energy of water molecules. It is possible that in the vapour phase they can effectively hold on to their latent energy - but could they give off some of it once closely packed in liquid phase? To test this hypothesis we immersed the T/R gap in a glass water tank. The motor employed for these tests was a high-speed 2-phase drag-cup motor (see **Fig.18** and associated description), wired in split-phase with two identical phase windings capacitatively balanced, and the galvanised iron plates each had an area of one square foot. The results are shown in Table 7 below, and clearly indicate that it is possible to tap - within the T/R cavity - the `latent heat` of water in the liquid phase. As observed, immersion of the T/R cavity in water increased the motor output speed 22% (12,117 / 9,888) x 100). This corresponds to a 50% increase in power output, from 18W at 9,888 rpm to 27W at 12,117 rpm:

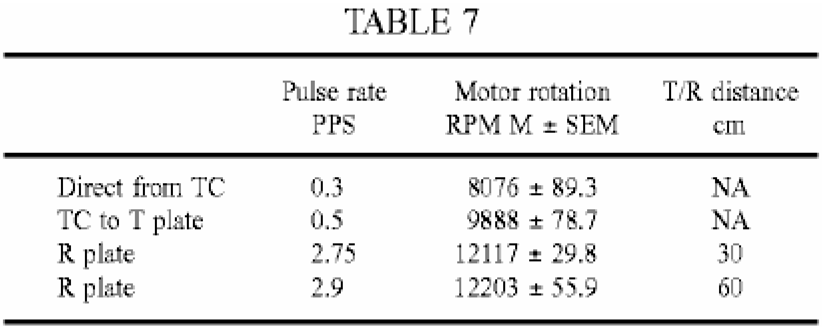

TABLE 7

	Pulse rate PPS	Motor rotation RPM M ± SEM	T/R distance cm
Direct from TC	0.3	8076 ± 89.3	NA
TC to T plate	0.5	9888 ± 78.7	NA
R plate	2.75	12117 ± 29.8	30
R plate	2.9	12203 ± 55.9	60

Thus the use of ion-containing water or other ion-containing aqueous liquid in the cavity promotes long distance propagation and a greater injection of latent and thermal energies in the receiver circuit. Such a result is not achieved if the cavity is filled with deionised water.

The preceding results lead therefore to the design of a presently preferred apparatus, based on these findings, for the conversion of mass-free electric energy, "latent heat" energy and "sensible" heat energy into conventional electric energy, as shown in **Fig.16**, which integrates all of the separate findings and improvements. The winding **6** of the Tesla coil at the bottom is driven in the usual manner employing a vibrator stage **2** to pulse the primary coil **4**. The outer pole of the secondary **6** is then connected to a circular metal plate **T** which is one end of an evacuated cylindrical cavity, connected to a vacuum pump or sealed at a desired pressure, or which forms a still containing water or other aqueous solution or liquid. This cavity constitutes the transmitter/receiver gap, and is therefore bounded by a dielectric envelope and wall structure **32**, with the circular receiver plate **R** as its top surface. In turn this plate **R** serves as the base of a conical Faraday cage **34**, preferably air-tight and at atmospheric pressure, but which could also be subject to evacuation, which conical structure carries at its apex provisions for a cold junction **45** and any possible enhancement of the same junction by surface application of different metallic conductors that may optimise the Peltier-Seebeck effect. The output from the cold junction where sensible thermal energy is added to the electrokinetic energy of charge carriers, is also the input to the distal end of the winding **6** of the chiral coil arrangement that sustains resonant capture of all three energy flows ((1) mass-free electric waves of a longitudinal nature, (2) true "latent heat" or the intrinsic (thermal) potential energy, and (3) the thermokinetic energy of molecules, (i.e. "sensible" heat) and, placed in series with the input of the full wave divider **8**, **10**, feeds the circuit output from the series capacitors **12**, **14** grounded at their common tap. In the T/R gap, the transmitted electric longitudinal wave energy is captured along with any intrinsic potential energy shed by molecules caught in the field. Within the **R** element, expanded into an enclosure that guides "sensible" radiant heat, the latter is generated and then recaptured at the cold junction.

The apparatus consisting of the cylindrical T/R gap cavity and the contiguous conical cage is then preferably finished in gloss white and cylindrically enveloped within a matt black container **46** by effective thermal insulation **48**, the latter terminating at the height of the bottom disc **T**. Apparatus (not shown) may be provided to move the plate **T** vertically to adjust the T/R gap.

Another alternative embodiment of the apparatus is shown in **Fig.17**. Here the circuit driving the apparatus is as we have set forth in our prior patents, which employs an autogenous pulsed abnormal glow discharge tube **50** in the configuration shown, supplied by a battery pack **DP** through blocking diodes **52** and an RC circuit formed by resistor **54** and capacitor **56** to drive the primary **2** of a first Tesla coil to obtain at the distal pole of the secondary **6** the energy to be injected to plate **T** in the form of a central electrode of a coaxial vacuum chamber (sealed or not), of which the cylindrical metallic envelope forms the receiver plate **R**, the latter being placed centrally inside the conical cage **34** and contiguous with its walls and base. The top and bottom of the coaxial chamber carries suitable insulating discs, preferably with O-ring type fittings. Again, the apparatus is enclosed in insulation within a cylindrical container **46**, and the input into the capture circuit driven from the full wave divider is taken from the cold junction **45** at the apex of the air-tight cage. The output circuit is similar to that of **Fig.15**.

We have found however that even when the component values in the motor driver and motor circuits are carefully selected so that these circuits are co-resonant with the dampened wave (DW) component of the motor driver pulses, the motor power output falls well short of that which should theoretically be attainable. In an endeavour to meet this problem, we replaced the squirrel-cage type induction motor **44** by a drag cup motor of type KS 8624 from Western Electric in the expectation that the low-inertia non-magnetic rotor would allow better response to the Dampened Wave component. This motor is similar to one of the types used by Reich in his experiments. Although results were much improved they still fell short of expectations. Replacement of this motor by an inertially dampened motor of type KS 9303, also from Western Electric, provided much better results as discussed below.

Fundamentally, the difficulties we encountered stemmed from the inability of motor couplings to respond efficiently and smoothly, and at the same time, to the pulse and wave components of Dampened Wave impulses: that is, simultaneously to the high-intensity peak current pulses (the front end event), the DC-like component, and to the dampened wave trains these cause, i.e. the pulse tails (or back end event)-or AC-like component. This difficulty is present even when we just seek to run induction motors from the DW impulses of a Tesla coil, the very difficulty that led Tesla to abandon his project of driving a non-ferromagnetic disc rotor mounted on an iron core bar stator with dampened waves.

We believe that the key to the capture of the mass-free energy flux output in electric form by Tesla transmitters, including any injected latent or thermal energy that have undergone conversion into electrical energy is to employ the tuned, unipolar, Y-fed, PAGD-plasma pulser driven split-phase motor drive we have invented (U.S. Pat. No. 5,416,391) in conjunction with an inertially dampened AC servomotor-generator (see **Fig.18**): this has a motor shaft **64** which couples a drag-cup motor rotor **60**, preferably of aluminium, silver, gold or molybdenum, directly to a drag-cup generator rotor **62** that drives a permanent magnet (PM) flywheel **66**, freely rotatable in bearings **67**, that provides inertial damping. The shaft **64**, journalled by bearings **61** in the casing of the motor **44**, provides a power output through optional gearing **68**. The phase windings of the motor **44** are wound on a stator core **70** having concentric elements between which the rotor or cup **60** rotates. This structure makes it ideal for the capture of the DW impulses, whether sourced in the transmitter, amplified in the T/R cavity or sourced in the plasma pulser, all in synchrony. Effectively the motor couples the damping action of the drag-cup sleeve motor rotor, which action, as we have already found for the KS-8624 motors, is quite effective at absorbing the front-end DC-like event, with the inertial damping of the PM flywheel upon the drag-cup sleeve generator rotor, that in turn is quite efficient at absorbing the back-end AC-like wavetrain event.

The KS-9154 motor used by Reich was not an inertial dampened AC drag-cup servomotor-generator. Had Reich succeeded in overcoming the limitations of his 2-phase OR Motor solution, as we have now shown it is possible to do (by applying the Function Y circuit to the PAGD split-phase motor drive which we invented), his motor would have suffered the same limitations which we encountered with the KS 8624 motor.

Any motor, by itself, has an internal or inherent damping whereby the acceleration only vanishes when the rotor is running at constant speed. For motors which operate on the basis of the drag principle, where the asynchronous slip is actually constitutive of the motor action, by inducing eddy currents in the rotor, the inherent damping is always more pronounced than for other induction motors. The damping or braking torque is produced when a constant current flows through a rotating drag disc or cup.

Aside from this inherent braking, dampers can also be applied to servo motors to further stabilise their rotation. They absorb energy, and the power output and torque of the motor is thereby reduced. Optimal operation of servo motors requires both rapid response on the part of the rotor to changes in the variable or control phase, and a stable response that is free from oscillation, cogging and overshooting. The rapid response is assured by employing low inertia rotors, such as drag-cups or cast alloy squirrel-cages, and the overshooting and oscillation are reduced to a minimum by damping or a retarding torque that increases with increasing motor speed. Typically, in a viscous-dampened servomotor, the damper is a drag-cup generator mounted rigidly on the shaft of the motor rotor, and the generator drag-cup rotates against the stator field of a static permanent magnet field. The generator develops a retarding torque directly proportional to speed, and the energy absorbed by the damper is proportional to speed squared. The damping can be adjusted and, as it increases, the same amount of input power yields lower torque and motor speeds. Inertial-dampened servo motors differ from viscous dampened motors in that the permanent magnet stator of the drag-cup generator is now mounted in its own bearings, either in the motor shaft or on a separate aligned shaft, forming a high-inertia flywheel.

This means that, whereas the motor rotor always experiences a viscous damping in viscous-dampened servo motors, in inertial-dampened servo motors the drag cup motor rotor only experiences a viscous damping while accelerating the flywheel, with the damping torque always opposing any change in rotor speed. Once the flywheel rotates synchronously with the rotor, all damping ceases. Note that this viscous damping is carried out via the coupling of the drag-cup generator rotor, rigidly affixed to the motor rotor, to the PM flywheel, so that their relative motion generates the viscous torque proportional to the relative velocity. Use of drag-cup sleeve rotors in inertially dampened servo motors was largely supplanted by squirrel-cage rotors once the latter became produced as cast alloy rotors. Since inertially dampened motors can be used in open and closed-loop servo applications, and present better stability - even in the presence of non-linearities - and higher velocity characteristics than other induction motors do (Diamond, A (1965) "Inertially dampened servo motors, performance analysis", Electro-Technology, 7:28-32.), they have been employed in antenna tracking systems, stable inertial-guidance platforms, analogue to digital converters, tachometers and torque tables.

The typical operation of an inertially dampened servomotor is as follows: with the reference phase fully excited, the motor rotor -fixedly linked to the generator rotor, as well as the flywheel - remain immobile; once power is applied to the control phase, the motor rotor immediately responds but the flywheel remains at rest. However, as the drag-cup generator **62** is forced to move through the permanent magnetic field of the flywheel, it creates a drag torque that slows down the attached motor rotor proportionally to the acceleration that it imparts to the flywheel that it now sets into motion, thus creating the viscous damper. As the flywheel accelerates, the relative speed of the motor with respect to the flywheel, as well as the damping torque, decrease until both motor and flywheel rotate synchronously and no damping torque is exercised - at which point the drag on the motor cup exerted by the generator cup is negligible.

The KS-9303 motor is an inertial dampened servomotor but is differentiated with respect to other inertially dampened motors, in that (1) it employs a drag-cup sleeve motor rotor made of aluminium, very much like that of the KS-8624, but with slightly altered dimensions and with a shaft extension for the drag-cup copper generator rotor, and (2) the moving flywheel structure was journalled on a separate, fixed shaft, as already described with reference to **Fig.18**. Now, in principle, even application of minimal damping decreases motor efficiency, resulting in diminished torque and speed. Whether the inertial-dampened motor has a drag-cup rotor, a sleeve rotor or a squirrel-cage rotor, the damping increases the rotor slip. Laithwaite considers drag-cup motors as being "dynamically inferior to their cage counterparts" (Laithwaite, E R (1957) "Induction machines for special purposes", London, England, p. 323). If we now add a viscous damping and retarding torque, we should not be able to get much more than a 55% efficiency in the best of conditions. On the other hand, the inertial damping arrangement described will only abstract or supply energy when the motor rotor is accelerating or decelerating relative to the flywheel.

These drag-cup motors, whether inertially dampened or not, develop a constant torque at constant rpm for a given supply frequency and a suitable phase shift capacitance. For each frequency the motors respond to, there is an optimum resonant split-phase capacitance, but other values nearby are still suited for operation, and for each value of capacitance, there is an optimum frequency to which the motors respond. For example the KS-8624 motor responds best at 450 Hz when a 1 microfarad capacitance is employed, responds best at 250 Hz when a capacitance of 10 microfarads is employed, and responds best at 60 Hz, when a capacitance of 100 microfarads is employed. As the capacitance increases, the resonant CW frequency of the motor is displaced to lower values. If we fix the capacitance at a value (e.g. 10 microfarads) suitable for testing the frequency response at a fixed voltage of 12 VAC, the observed result for both the KS-8624 and KS-9303 motors show a response distribution of the motor rotary velocity that has an identical peak at 250 Hz for both motors, with the response decreasing to zero smoothly on both sides of the peak.

These results indicate that, when wired as a split-phase motor, the motor rotary velocity varies not as a function of voltage or current, but as a function of frequency when the phase-splitting capacitance is fixed within a suitable range, there being an optimum frequency mode for each value of suitable capacitance, with lower values of capacitance favouring higher frequency modes. For a given frequency and capacitance, the motor rotary velocity remains essentially constant and independent from voltage and current input, and thus at a plateau. Torque, in the same circuit arrangement, follows exactly the same pattern as rotary velocity, as a function of input frequency at a fixed potential. Torque is linearly proportional to rpm in these motors when they are split-phase wired, and rpm linearly proportional to CW frequency, which makes them ideal for experimentation and determination of power output computations. Moreover, since these are drag machines, the slip itself determines the rotor currents and these are susceptible to tuning such that their retardation and relative position in the field can find resonant modes for varying CW frequency and capacitance.

In the circuit of **Fig.17** when using the KS 9303 motor, the inertial damping of the flywheel coupling retards the motor rotor currents sufficiently to allow them to build up torque, with the entire motor assembly serving as the preferred sink for all of the energy, mass-free and mass-bound, captured by the receiving coil circuit with a drawing action established by the motor on the circuit, and providing satisfactory absorption by an inertial damper of the combined, synchronised, dampened wave impulses, those occurring at a low frequency as a result of the firing of the PAGD reactor, and those occurring at a higher superimposed frequency -sourced in the transmitter circuit and picked-up by the receiver plate and coil. The action of each DW impulse train itself generates two different events: the DC-like auto-electronic-like discontinuity which sets the motor in motion and initiates the rotor currents, and the AC-like dampened wavetrain which supports the consistency of those rotors. The concentration of current required to kick-start the motor is provided by the DW impulses of the PAGD reactor, whereas, once the motor is in motion, and particularly, once it is stabilised by the flywheel, the cumulative action of the higher frequency DW impulses makes itself felt by accelerating the rotor to an optimum rotary velocity.

For the next series of tests we employed the basic circuit diagram of the improved motor shown in **Fig.19**. The transmission station is the typical Tesla transmitter with a line-fed, 60 Hz vibrator stage. At the line input to the first stage, we place a calibrated AC wattmeter (Weston Model 432), and a Beckman 330B rms ammeter in series with the hot lead, we set the vibrator stage for 41 clicks, consuming between 28.5W and 35W, depending upon circumstances yet to be described. This consumption was confirmed by driving the coil from an inverter powered by a 12 volt battery. The inverter consumes 2.16 watts, and is 90% efficient. The total consumption from the battery was 42 watts (12V at 3.5A); once the 2.16 watts is deducted and the efficiency taken into account, we obtain the same 36W (vibrator stage at max., i.e. 47 clicks, in this experiment). The T/R gap is adjusted to 3", and 2 square foot plates are used. Transmitter and receiver coils are tuned, and so are the plate capacitances, to 250 kHz, also the capacitances of the Function Y circuit connected at the output of the receiving coil.

The rectified voltage and current generated by the transmitter secondary and by the transmitter plate was ascertained with a coil-tuned wave-divider (Function Y) circuit by loading it with different resistive values. The results constitute a measure of the mass-bound electrical power output directly from the transmitter apparatus. The same method was employed to ascertain the voltage, current and power of the mass-bound charges circulating in the receiving plate and coil circuit. The results are shown in Table 8 below:

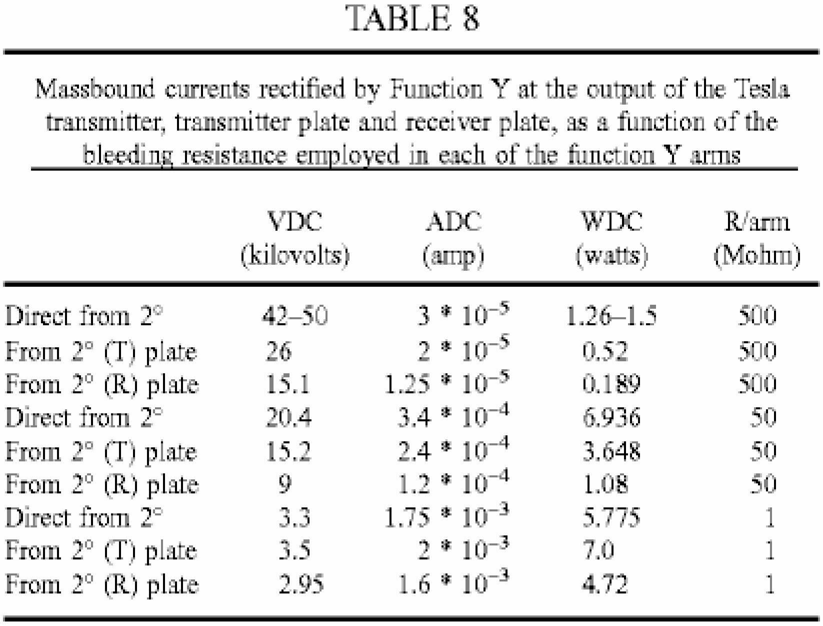

TABLE 8

Massbound currents rectified by Function Y at the output of the Tesla transmitter, transmitter plate and receiver plate, as a function of the bleeding resistance employed in each of the function Y arms

	VDC (kilovolts)	ADC (amp)	WDC (watts)	R/arm (Mohm)
Direct from 2°	42–50	$3 * 10^{-5}$	1.26–1.5	500
From 2° (T) plate	26	$2 * 10^{-5}$	0.52	500
From 2° (R) plate	15.1	$1.25 * 10^{-5}$	0.189	500
Direct from 2°	20.4	$3.4 * 10^{-4}$	6.936	50
From 2° (T) plate	15.2	$2.4 * 10^{-4}$	3.648	50
From 2° (R) plate	9	$1.2 * 10^{-4}$	1.08	50
Direct from 2°	3.3	$1.75 * 10^{-3}$	5.775	1
From 2° (T) plate	3.5	$2 * 10^{-3}$	7.0	1
From 2° (R) plate	2.95	$1.6 * 10^{-3}$	4.72	1

The results indicate that the highest mass-bound power assembled by the secondary transmitter circuit does not exceed 7 watts - and this is directly output from the secondary **26** when the load is 50 Megohm, or from the transmitter plate when the load is 1 Megohm. The mass-bound electric power emulated by the receiving circuit (plate, coil and Function Y without the plasma pulser circuitry) never exceeds the mass-bound electric power outputted directly by the transmitter, and peaks when the resistive load value (1 Megohm) approaches the pre-breakdown resistance range of the vacuum tube, at 4.72W. These findings then indicate that when the transmitter circuit is consuming a maximum of 35W, a typical output from the secondary of the transmitter is 7W, and at 3" of distance within the proximal field of the latter, the pick-up by a tuned receiver will be of the order of 5W of mass-bound current duplicated within the receiving coil. The loss in the first stage is therefore on the order of sevenfold.

Continuing with the description of the circuit of **Fig.19**, a 128 cm^2 plate area, 6 cm gap PAGD reactor is used, connected as described in our prior art to a high-vacuum rotary pump (Correa, P & Correa, A (1995) "Energy conversion system", U.S. Pat. No. 5,449,989). Pressure readings were obtained with a thermocouple gauge during the operational runs. The KS-9303 motors to be tested are then connected to the PAGD reactor in the usual capacitatively-coupled, inverter fashion described in our prior art (Correa, P & Correa, A (1995) "Electromechanical transduction of plasma pulses", U.S. Pat. No 5,416.391). Their rpm is detected by a stroboscopic tachometer and fed to a Mac Performa 6400 running a motor algorithm program calculating the power output. Motor measurements were made at five minutes into each run for the unloaded motors, and at ten minutes for the inertially dampened motors.

All experiments were carried out in the same work session. The experimental determination of the continuous rotary power output as a function of the reactor pulse rate confirmed that the improved circuit develops maximum rotary capture of the mass-free energy in the receiver circuit at the lowest rates of pulsation, just as we have previously found for the conversion system of U.S. Pat. No. 5,449,989. Furthermore, the data showed that even motors of type KS-8624 are able to output power mechanically in excess of the mass-bound power output by the transmitter (7W) or captured by the receiver (5 to a max. of 7W), once the PAGD rate decreases to 1.5 PPS. Such an anomaly can only be explained by the system having become able to begin capturing the mass-free energy flux in the receiver circuit that we know already is output by the transmitter circuit. But this excess mechanical power is still less than the power input into the transmitter, and clearly so. It represents a power gain with respect to the secondary, but a loss with respect to the primary. The full breadth of the capture of the mass-free electric energy flux circulating in the receiver circuit is not seen until the motors are resonantly loaded because they are inertially dampened.

The KS-9303 motors, once inertially dampened, and thus loaded, are able to recover enough power from the mass-free energy field to develop a mechanical power, not just greatly in excess of the mass-bound power of the secondary, but also greatly in excess of the mass-bound power input to the vibrator stage and the primary, at 28 to 35W. Once the pulse rate approaches the same 1.5 PPS marker, mechanical power in excess of the mass-bound electric power input to the primary becomes evident, peaking at nearly three times that input. In fact, the highest output recorded was also obtained with the lowest input to the transmitter circuit, the highest exact coefficient observed in this experiment being 100.8W / 28W = 3.6. Furthermore, with respect to the secondary mass-bound output, the same mechanical rotary output represents a much greater overunity coefficient of performance, on the order of 14.4 times greater. This is at least partly the result of the receiver and motor capture of the mass-free electric energy output by the transmitter, and may be partly the result of mass-free energy engrafted by the PAGD regime in the PAGD reactor.

Reviewing the mechanical power output results as a function of increasing vacuum in the PAGD reactor and at different output power levels, any motor performance below the 5-7W limit of the traditional mass-bound output power of the secondary represents an output mechanical power loss with respect to both the mass-bound secondary output and the mass-bound primary input. All the results for pressures down to 0.03 Torr fall into this category, and thus represent a very inefficient coupling to the PAGD regime. Any motor performance between 7W and 28-35W represent a loss with respect to the electrical power input to the transmitter system, but a net gain of power with respect to the mass-bound secondary power output. None of the non-inertially dampened motors tested were able to perform outside of this area, under the test conditions. With more efficient primary to secondary couplings in the transmitter station, however, one could advantageously employ these motors alone to extract some of the mass-free power of the secondary or to operate them in enclosed vessels without conventional external electrical connections.

To reach satisfactory levels of recovery of mass-free energy, one must dampen the superimposed DW impulses. Hence, all results showing outputs in excess of 35W were obtained using the inertially dampened KS-9303 motors, and represent a net overunity power gain over both the power input to the primary and the mass-bound power output by the secondary, or the mass-bound power emulated by the receiver circuitry. This happens when the PAGD pulse rate falls to 2 PPS, with the rotary power output steeply increasing as the rate falls to 1 PPS.

One of the interesting features of the motor circuitry we have proposed is that it can operate with pulsed plasmas in both the TRD and the AGD regions, the least efficient response occurring in the NGD region near the Paschen minimum. One might think that the voltage depression would allow increased current intensity supplied to the motors, but in fact that is not observed, with the flashing of the NGD yielding erratic oscillations and low values of current. In keeping with the notion that the TRD plasma is mainly composed of lagging positive ions, whereas the PAGD plasma is mostly an electron plasma, the observed direction of rotation of the motors is opposite in the TRD region to that of the AGD region. The NGD region therefore marks the depression where the velocity vectors change direction. In the second or PAGD region, motor operation is very quiet, unlike what is observed in the TRD region.

Part and parcel of the tuning of the circuit components is the selection of the optimum capacitances employed to couple the PAGD reactor to the motor circuit and split the phase to feed the auxiliary winding of the motor. We have experimented with capacitances ranging from 0.5 to 100 microfarads, and found that best results (for the specific circuit in question - including the characteristics of the transmission), were such that the optimum value of the PAGD coupling capacitance lay near 4 microfarads, and the phase splitting capacitance, near 1 to 4 microfarads, depending upon weather conditions. In good weather days lower capacitance values can be used, while in bad weather days higher capacitances are needed. For ease of comparison in demonstrating the need to tune the circuit by employing optimum capacitances in those two couplings (reactor to motor, and motor phase coupling), we employed the same capacitances in both circuit locations.

A comparison of tests using 1 and 4 microfarad values shows the difference caused by changing those capacitances from their optimum value: across all discharge regions of the pressure range that was examined, the four motors tested, operated with greater motor speeds when the capacitances are set to 4 microfarads rather than to 1 microfarad. The less efficient performance obtained with 1 microfarad capacitance fits the inverse correlation of pulse power with increasing pulse frequency, such as we have found for the PAGD regime. This is made evident by a comparison of rpm versus pulse rate for the two capacitance values being considered. They demonstrate the higher pulse rates observed with the lower capacitance, that correlate with the lower motor speeds, and result in lower efficiency of the motor response. The results equally indicate that low capacitance values increase the pulse rate, but if this increase is out of tune with the rest of the circuit values, it results in power waste because it imposes a rate that is not optimum.

We have also determined experimentally that the efficiency of the system is affected by external weather conditions, higher efficiencies being noted on a fine bright day than under poor weather conditions even though the apparatus is not exposed to such conditions. This may reflect a diminution under poor weather conditions of latent mass-free energy that can be taken up by the system.

The observed high efficiency of circuits including inertially dampened motors indicates that the phenomenon does not reduce to a mere optimum capture of, DC-like pulses produced by the reactor in what is essentially an AC motor circuit. Effectively, the pulsed plasma discharge deploys a front-end, DC-like pulse, or discontinuity, but this is followed by an AC-like dampened wave of a characteristic frequency (having a half-cycle periodicity identical to that of the front-end pulse) to which the motor circuit also responds. Moreover, the mass-free electric radiation from the transmitter circuit itself induces, in the receiver antenna, coil and circuit, and in the reactor discharge itself, the train of finer dampened wave impulses responsible, after conversion through the wave-divider, for the mass-bound rectified current which is employed to charge the plasma reactor to begin with. Serving as trigger of the plasma discharges in the reactor are the DW impulses circulating in the receiver circuit, such that the two different lines of DW impulses, in the receiver circuit (for example 120 PPS for the pulses and 154 kHz for the waves) and from the reactor, are synchronised by interpolated coincidences, since their pulse and wave frequencies are different. Ideally, these two superimposed DW frequencies are harmonics or made identical. The receiver stage involves capture of the mass-free electric energy received from the transmitter, duplication of the mass-bound current in the receiver coil, and injection of latent and sensible thermal energy in the T/R gap cavity which augments the emulated mass-bound current.

The mass-bound current is employed to charge the wave-divider capacitance bridge and therefore the reactor. In turn, the plasma pulses from the reactor are superimposed with the DW impulses from the receiving coil, and together they are coupled to the split-phase motor drive. Hence the first receiver stage employs the totality of the energy captured in the T/R gap cavity - mass-free electric energy transmitted by the **T** plate, latent and sensible thermal energy injected at the surface of the **R** plate - and produces in the receiving coil a mass-bound current comparable to that assembled in the transmitter coil by the action of the primary. The mass-bound current is stored in the wave-divider bridge and used to drive the plasma reactor in the PAGD region. Subsequently, the autogenous disruptive discharge that employs a substantial electron plasma generates both a concentrated, intense flux of mass-bound charges in the output circuit, and a mass-free oscillation of its own. The dampened motor is therefore fed directly with (1) the intense mass-bound current output from the reactor; (2) the pulse and wave components of the mass-free electric energy captured by the receiver plate and coil (and matched by conduction through the earth), and which are gated through the wave-divider and the reactor for the duration of the PAGD channel; and (3) any mass-free latent energy taken up from the vacuum by the PAGD event. Once the motor is set into motion, and is resonantly loaded with an inertial damper, we believe that it will also respond to the much weaker DW impulses captured by the receiver, since these impulses encompass both a DC-like front end - further enhanced by analytic separation through the wave-divider - and a dampened wave at 154 kHz.

Essentially, the DW impulses that are ultimately sourced in the transmitter - and received unipolarly through the T/R gap - have sufficient DC-like potential (plus all the other requisite physical characteristics, such as frequency) to contribute directly to the motor response, once the motor has gained substantial speed (for they lack the current to set it into motion, one of the contributions from the plasma pulser). This is the case, provided that the motor itself is suited for absorption of both DC-like pulses and AC-like dampened waves, which is precisely the case with motors of the type shown in **Fig.18** since the inertia of the flywheel is overcome through homopolar absorption of the dampened oscillations simultaneously in the motor drag-cup rotor and in the generator drag-cup rotor.

We also tested these inertially dampened motors in the traditional DC power supply-driven PAGD circuit we have taught in our previous patents, that is, circuits with an overt HV DC power source, and thus in the absence of any Function Y circuit or transmitter circuit. Here then, only the DW impulses generated by the PAGD reactor can account for the motor response. The tube employed (A31) had an area of 256 cm^2, and a gap distance of 4 cm. Coupling capacitances employed were 4 microfarads for the inverter coupling, and 1 microfarad for the split phase motor coupling. The DC power supply delivered up to 1 ampere of current between 150 and 1,000 VDC, and the ballast resistor was adjusted to 215 ohms. Having determined the basic physical characteristics of the reactor's behaviour in the circuit under consideration, we conducted our experiment in the PAGD region. We chose a pressure of 0.6 Torr, just off from the Paschen minimum, as we intended to benefit from the lower sustaining voltage which it affords.

The experiment basically consisted of increasing the sustaining voltage at this fixed pressure in the PAGD regime, and measuring the diverse physical parameters of the circuit and motor response in order to ultimately ascertain the difference between the input electric DC power and the output mechanical rotary power. We first looked at how the motor rpm response varied as a function of the sustaining voltage (V_S): the results illustrate the importance of starting close to the Paschen minimum in the pressure scale, since the KS-9303 motors reach plateau response (at 17,000 rpm) when the reactor output voltage nears 450V. Any further increase in potential is simply wasted. Likewise, the same happened when we measured motor speed as a function of increasing peak DC current, plateau response being reached at 0.1 ADC. Again, any further increase in current is wasted. Essentially then, the optimal power input to the reactor when the output of the latter is coupled to the motor, lies around 45 watts. This is a typical expenditure in driving a PAGD reactor. As for pulse rate we once again find a motor response that is frequency proportional in the low frequency range, between 10 and 40 PPS (all pulse rates now refer solely to PAGDs per sec), but once rates of >40 PPS are reached, the response of the motor also reaches a plateau.

The observed increment in speed from 40 to 60 PPS translates only into an increase of 1,000 RPM, from 16,000 to 17,000 RPM. So, we can place the optimal PAGD rate at ca 40 PPS. The DC electric power input to drive the PAGD reactor was next compared to the rotary mechanical power output by the inertially loaded motor, driven in turn by the reactor. This comparison was first carried out with respect to the PAGD rates. The motor response far exceeds the conventional input power, indicating that the whole system can be tuned to resonance such that optimal power capture inside the reactor takes place, the critical limit rate lying at around 60 PPS, when the motor response is firmly within the pulse response plateau. At this juncture, the break-even efficiency for the measured rates of energy flux over time reach 700% (overunity coefficient of 7), in keeping with the observations and the values we have made in the PAGD conversion system. In the proportional part of the curve, before the plateau is reached, even greater rates of break-even efficiency - up to >1,000% were registered.

These results constitute the first time we have been able to confirm the presence of output energy in excess of break-even over conventional mass-bound energy input in the PAGD inverter system, and the results are comparable to what we have observed and previously reported for the PAGD converter system. At pulse rates greater than 60 PPS a greater input power results in decreased efficiency, also translated into a noticeable heating of the reactor and motor. And this is all the more remarkable as experiments we have conducted with inductive tuning of PAGD reactors, or employing PAGD reactors as replacements for the primaries of Tesla coil assemblies, and still, more recently, with the PAGD inverter circuit driving motors, have all shown that it is possible to operate these reactors with minimal mirroring and heating, preserving essentially the cold-cathode conditions and yet focusing the plasma column so that deposition on the insulator is negligible. It appears that above a certain threshold of optimal efficiency, surplus input energy is just dissipated thermally by both the reactor and the motors.

It should be understood that the above described embodiments are merely exemplary of our invention, and are, with the exception of the embodiments of **Figs. 16 to 19** designed primarily to verify aspects of the basis of the invention. It should also be understood that in each of these embodiments, the transmitter portion may be omitted if an external or natural source of Tesla waves is available, provided that the receiver is tuned to the mass-free radiation mode of the source. For example if solar radiation is available in which the mass-free component has not interacted with the earth's atmosphere (as in space applications), the receiver is tuned to the voltage wave of the mass-free radiation sourced in the sun, e.g. by using a Tesla coil in the receiver constructed to have an appropriate voltage wave close to the 51.1 kV characteristic of such radiation.

CLAIMS

1. A device for the conversion of mass-free radiation into electrical or electrokinetic energy comprising a transmitter of mass-free electrical radiation having a dampened wave component, a receiver of such radiation tuned to resonance with the dampened wave frequency of the transmitter, a co-resonant output circuit coupled into and extracting electrical or electrokinetic energy from the receiver, and at least one of a transmission cavity between the transmitter and the receiver, a full-wave rectifier in the co-resonant output circuit, and an oscillatory pulsed glow discharge device incorporated in the co-resonant output circuit.

2. A device according to claim 1, wherein the output circuit comprises a full wave rectifier presenting a capacitance to the receiver.

3. A device according to claim 2, wherein the output circuit comprises an electric motor presenting inductance to the receiver.

4. A device according to claim 3, wherein the motor is a split phase motor.

5. A device according to claim 4, wherein the motor is a drag motor having a non-magnetic conductive rotor.

6. A device according to claim 5, wherein the motor has inertial damping.

7. A device according to claim 6, wherein the motor has a shaft, a drag cup rotor on the shaft, and inertial damping is provided by a further drag cup on the shaft.

8. A device according to claim 6, wherein the transmitter and receiver each comprise at least one of a Tesla coil and an autogenous pulsed abnormal glow discharge device.

9. A device according to claim 8, wherein the transmitter and receiver both comprise Tesla coils, and further including a transmission cavity which comprises spaced plates connected respectively to the distal poles of the secondaries of Tesla coils incorporated in the transmitter and receiver respectively.

10. A device according to claim 9, wherein the plates are parallel.

11. A device according to claim 9, wherein the plates are concentric.

12. A device according to claim 9, wherein at least the receiver comprises a Tesla coil driving a plasma reactor operating In PAGD (pulsed abnormal glow discharge) mode.

13. A device according to claim 1, wherein the transmitter and receiver each comprise at least one of a Tesla coil and an autogenous pulsed abnormal glow discharge device.

14. A device according to claim 12, wherein the transmitter and receiver both comprise Tesla coils, and further Including a transmission cavity which comprises spaced plates connected respectively to the distal poles of the secondaries of Tesla coils incorporated in the transmitter and receiver respectively.

15-17. (cancelled)

18. A device according to claim 1 wherein a transmitter/receiver cavity is present and filled with an aqueous liquid.

19. A device for the conversion of mass-free radiation into electrical or electrokinetic energy comprising a receiver of such radiation from a source of mass-free electrical radiation having a dampened wave component, the receiver being tuned to resonance with the dampened wave frequency of the source, a co-resonant output circuit coupled into and extracting electrical or electrokinetic energy from the receiver, and at least one of a transmission cavity between the source and the receiver, a full-wave rectifier in the co-resonant output circuit, and an oscillatory pulsed glow discharge device incorporated in the co-resonant output circuit.

PAULO and ALEXANDRA CORREA

US Patent 5,449,989 12th September 1995 Inventors: Correa, Paulo and Alexandra

ENERGY CONVERSION SYSTEM

This patent shows a method of extracting environmental energy for practical use. In the extensive test runs, an input of 58 watts produced an output of 400 watts (COP = 6.9). This document is a very slightly re-worded copy of the original.

ABSTRACT

An energy conversion device includes a discharge tube which is operated in a pulsed abnormal glow discharge regime in a double ported circuit. A direct current source connected to an input port provides electrical energy to initiate emission pulses, and a current sink in the form of an electrical energy storage or utilisation device connected to the output port captures at least a substantial proportion of energy released by collapse of the emission pulses.

US Patent References:

3205162	Sep, 1965	MacLean.
3471316	Oct, 1969	Manuel.
3705329	Dec, 1972	Vogeli.
3801202	Apr, 1974	Breaux.
3864640	Feb, 1975	Bennett.
3878429	Apr, 1975	Iwata.
4009416	Feb, 1977	Lowther.
4128788	Dec, 1978	Lowther.
4194239	Mar, 1980	Jayaram et al.
4443739	Apr, 1984	Woldring.
4489269	Dec, 1984	Edling et al.
4527044	Jul, 1985	Bruel et al.
4772816	Sep, 1988	Spence.
4896076	Jan, 1990	Hunter et al.
5126638	Jun, 1992	Dethlefsen.

Other References:

Tanberg, R. "On the Cathode of an Arc Drawn in Vacuum", (1930), Phys. Rev., 35:1080.
Kobel, E. "Pressure & High Vapour Jets at the Cathodes of a Mercury Vacuum Arc", (1930), Phys. Rev., 36:1636.
Aspden, H. (1969) "The Law of Electrodynamics", J. Franklin Inst., 287:179.
Aspden, H. (1983) "Planar Boundaries of the Space-Time Lattice" Lettere Al Nuovo Cimento, vol. 38, No. 7, pp. 243-246.
Aspden, H. (1980) "Physics Unified", Sabberton Publications, pp. 14-17, 42-45, 88-89, 190-193.
Pappas, P. T. (1983) "The Original Ampere Force and Bio-Savart & Lorentz Forces", Il Nuovo Cimento, 76B:189.
Graham, G. M. & Lahoz, D. G. (1980) "Observation of Static Electromagnetic Angular Momentum in Vacuo", Nature, vol. 285, pp. 154 & 155.
Sethlan, J. D. et al., "Anomalous Electron-Ion Energy Transfer in a Relativistic-Electron-Beam-Plasma" Phys. Rev. Letters, vol. 40, No. 7, pp. 451-454 (1978).

REFERENCE TO RELATED APPLICATIONS

This application is a continuation-in-part of U.S. application Ser. No. 07/922,863, filed Jul. 31, 1992 (abandoned), and is also a continuation-in-part of U.S. patent application Ser. No. 07/961,531, filed Oct. 15, 1992, now U.S. Pat. No. 5,416,391.

BACKGROUND OF THE INVENTION

1. Field of the Invention:

This invention relates to energy conversion circuits utilising discharge tubes operating in the pulsed abnormal glow discharge (PAGD) regime.

2. Review of the Art:

Such discharge tubes and circuits incorporating them are described in our co-pending U.S. patent application Ser. Nos. 07/922,863 and 07/961,531. The first of these applications discloses discharge tube constructions particularly suited for PAGD operation, and the second discloses certain practical applications of such tubes, particularly in electric motor control circuits. The review of the art contained in those applications is incorporated here by reference, as is their disclosure and drawings.

It is known that there are anomalous cathode reaction forces associated with the cathodic emissions responsible for vacuum arc discharges, the origin and explanation of which have been the subject of extensive discussion in scientific literature, being related as it is to on-going discussion of the relative merits of the laws of electrodynamics as variedly formulated by Ampere, Biot-Savart and Lorentz. Examples of literature on the subject are referenced later in this application.

SUMMARY OF THE INVENTION

The particular conditions which prevail in a discharge tube operated in the PAGD regime, in which a plasma eruption from the cathode is self-limiting and collapses before completion of a plasma channel to the anode gives rise to transient conditions which favour the exploitation of anomalous cathode reaction forces.

We have found that apparatus utilising discharge tubes operated in a self-sustaining pulsed abnormal glow discharge regime, in a double ported circuit designed so that energy input to the tube utilised to initiate a glow discharge pulse is handled by an input circuit substantially separate from an output circuit receiving energy from the tube during collapse of a pulse, provides valuable energy conversion capabilities.

The invention extends to a method of energy conversion, comprising initiating plasma eruptions from the cathode of a discharge tube operating in a pulsed abnormal glow discharge regime utilising electrical energy from a source in a first circuit connected to said discharge tube, and capturing electrical energy generated by the collapse of such eruptions in a second circuit connected to the discharge tube.

BRIEF DESCRIPTION OF THE DRAWINGS

The invention is described further with reference to the accompanying drawings, in which:

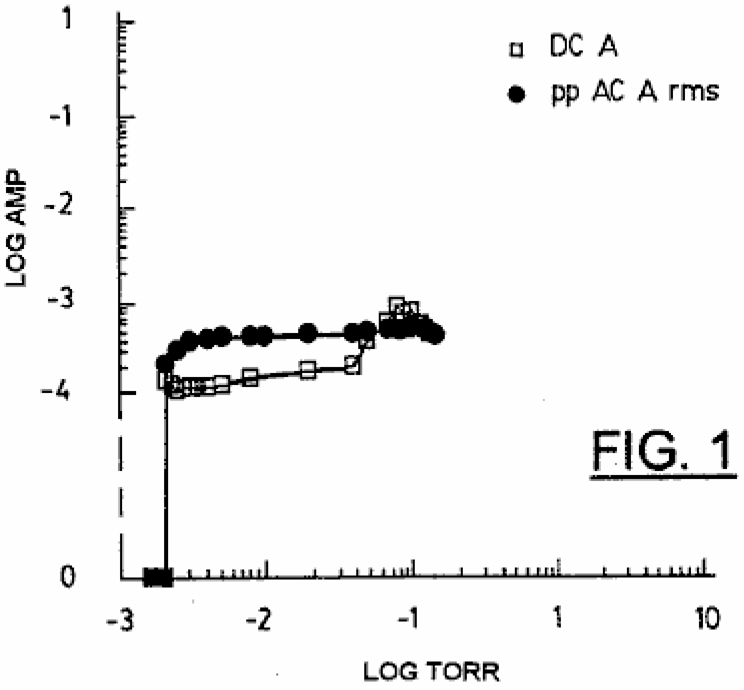

FIG. 1

Fig.1 shows variation of applied DC current and pulse AC rms currents characteristic of a low current PAGD regime, as a function of decreasing pressure, for a 128 cm^2 H34 aluminium plate pulse generator having a 5.5 cm gap length and being operated in the single or plate diode configuration of FIG. 11A, at about 600 V DC.

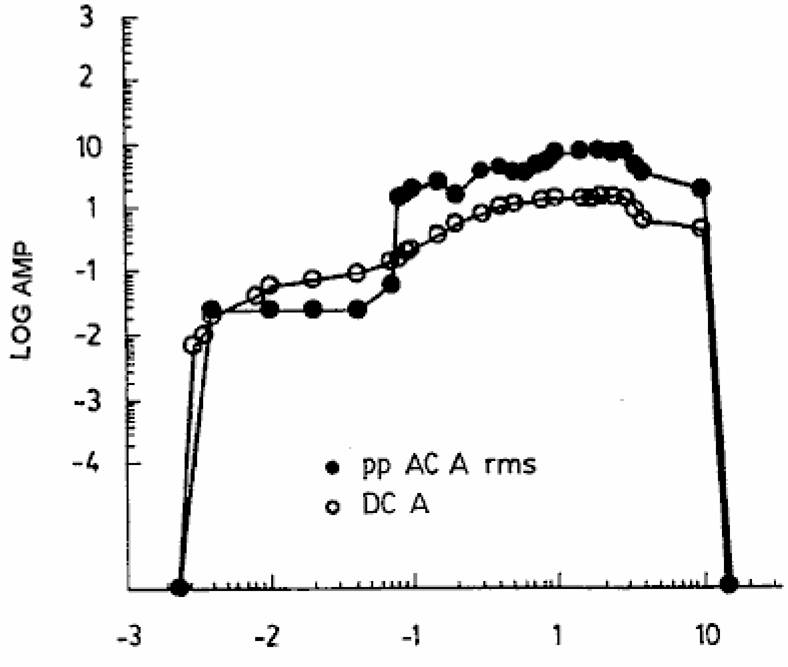

FIG. 2

Fig.2 shows variation of applied DC current and AC rms currents of a high current PAGD regime, as a function of the decreasing pressure, for a device identical to that of Fig.1, and operated at the same potential.

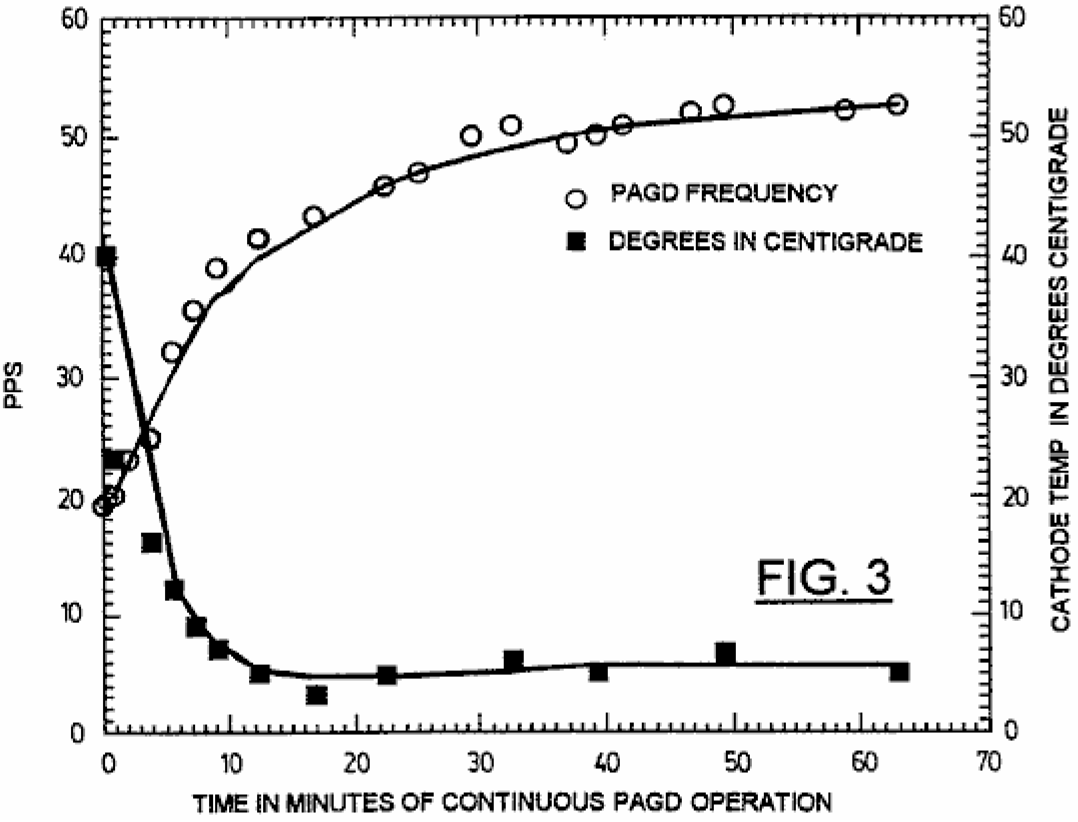

FIG. 3

Fig.3 shows PAGD rate vs pulse generator cathode temperature as a function of the time of continuous PAGD operation, for a pulse generator with 64 cm^2 plates having a 4 cm gap distance, operated at a DC voltage of 555 (av) and R1 = 600 ohms (see Fig.9).

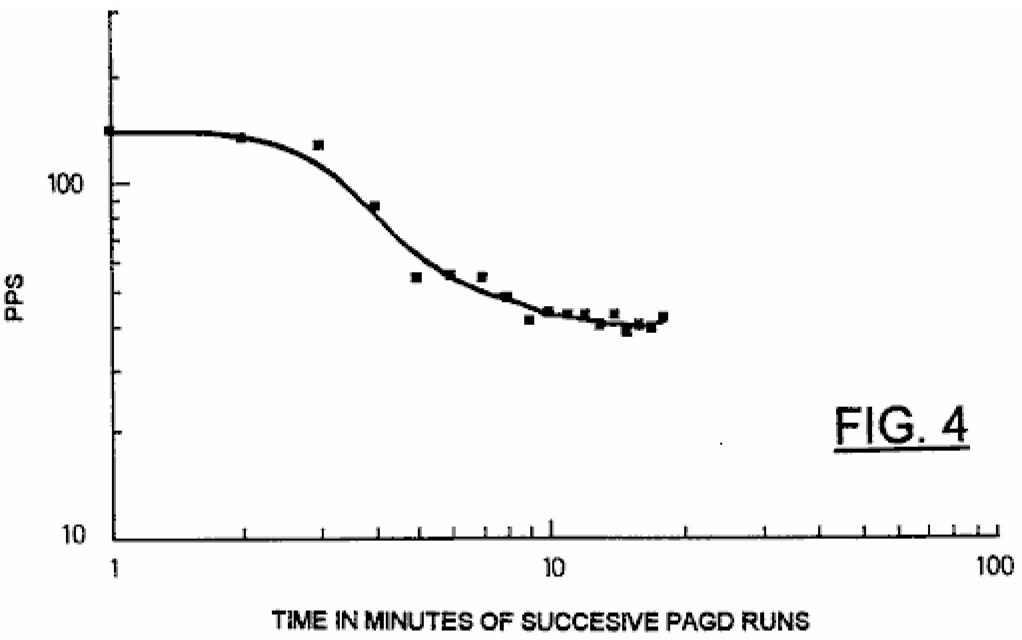
FIG. 4

Fig.4 shows PAGD frequency variation with time, for 18 successive spaced one-minute PAGD runs for a pulse generator with 128 cm^2 plates, and a 5.5 cm gap distance, operated at V DC = 560 (av) and R1 = 300 ohms.

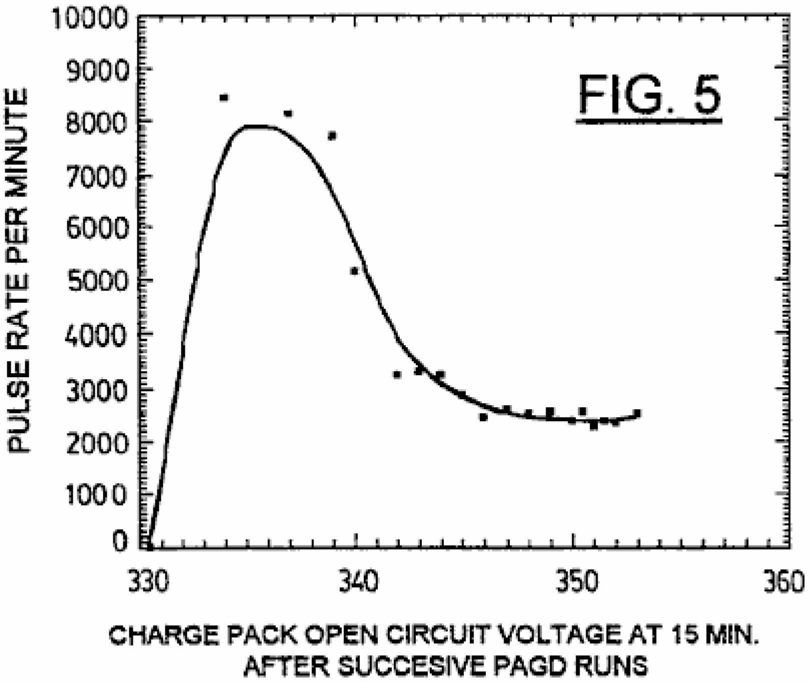
FIG. 5

Fig.5 shows variation of the PAGD frequency in pulses per minute (PPM) with increasing charge of a PAGD recovery charge pack (see Fig.9), as measured in terms of the open circuit voltage following 15 minutes of relaxation after each one minute long PAGD run, repeated 18 times in tandem, under similar conditions to Fig.4.

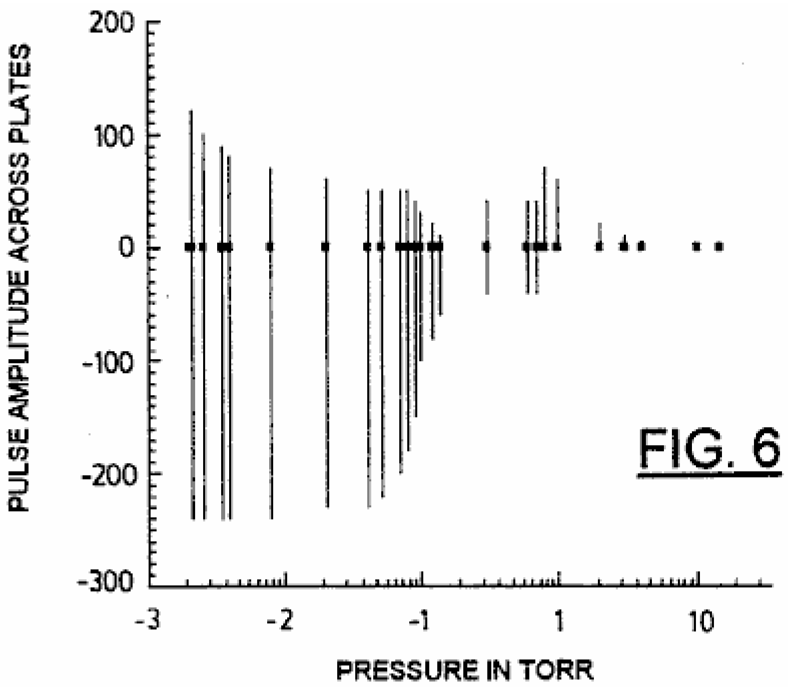

FIG. 6

Fig.6 shows volt amplitude variation of continuous PAGD at low applied current, as a function of decreasing air pressure, for a 128 cm^2 plate area device, gap length = 5 cm; (DC V at breakdown = 860).

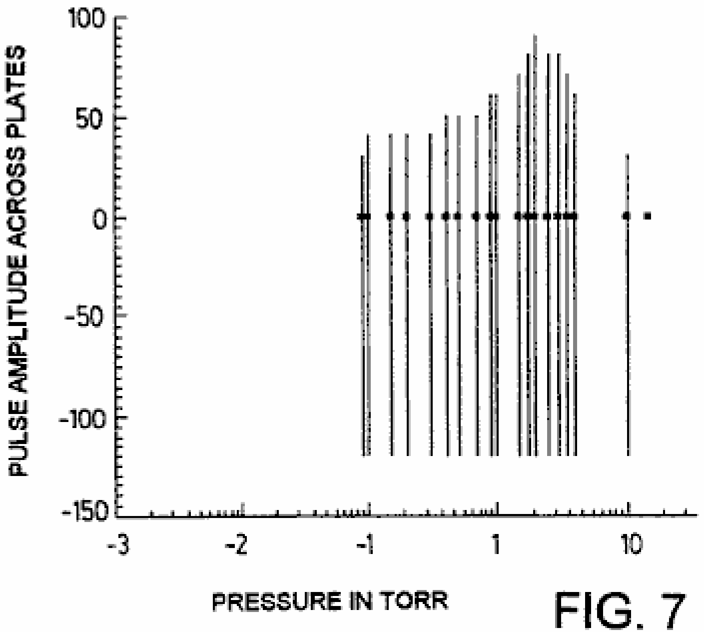

FIG. 7

Fig.7 shows volt amplitude variation of continuous PAGD at high applied current as a function of the decreasing air pressure, for a 128 cm^2 plate area device, gap length = 5 cm; (DC V at breakdown = 860).

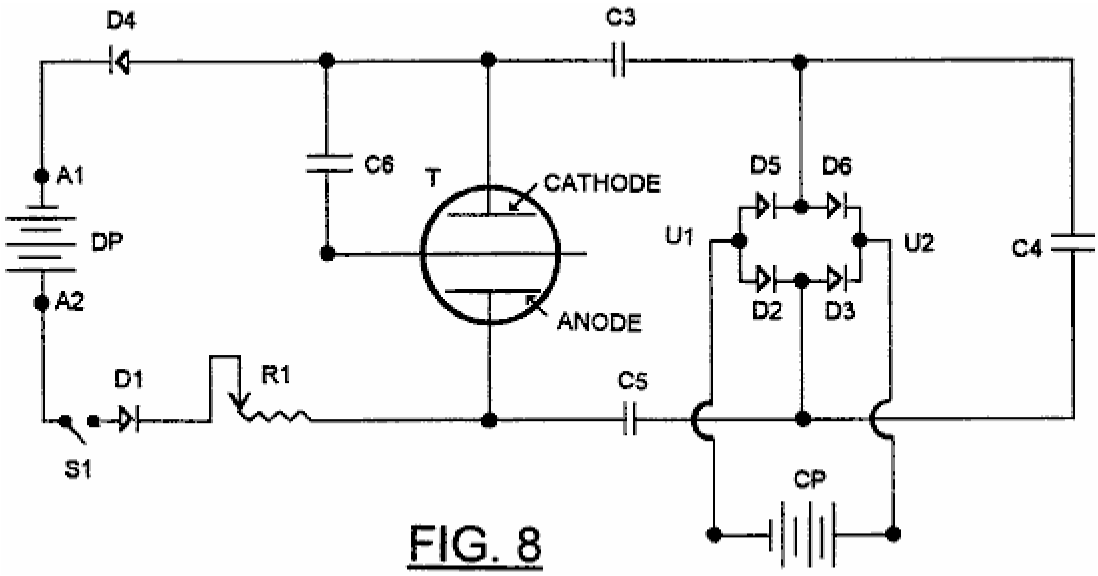

FIG. 8

Fig.8 is a schematic diagram of a first experimental diode (without C6) or triode PAGD circuit.

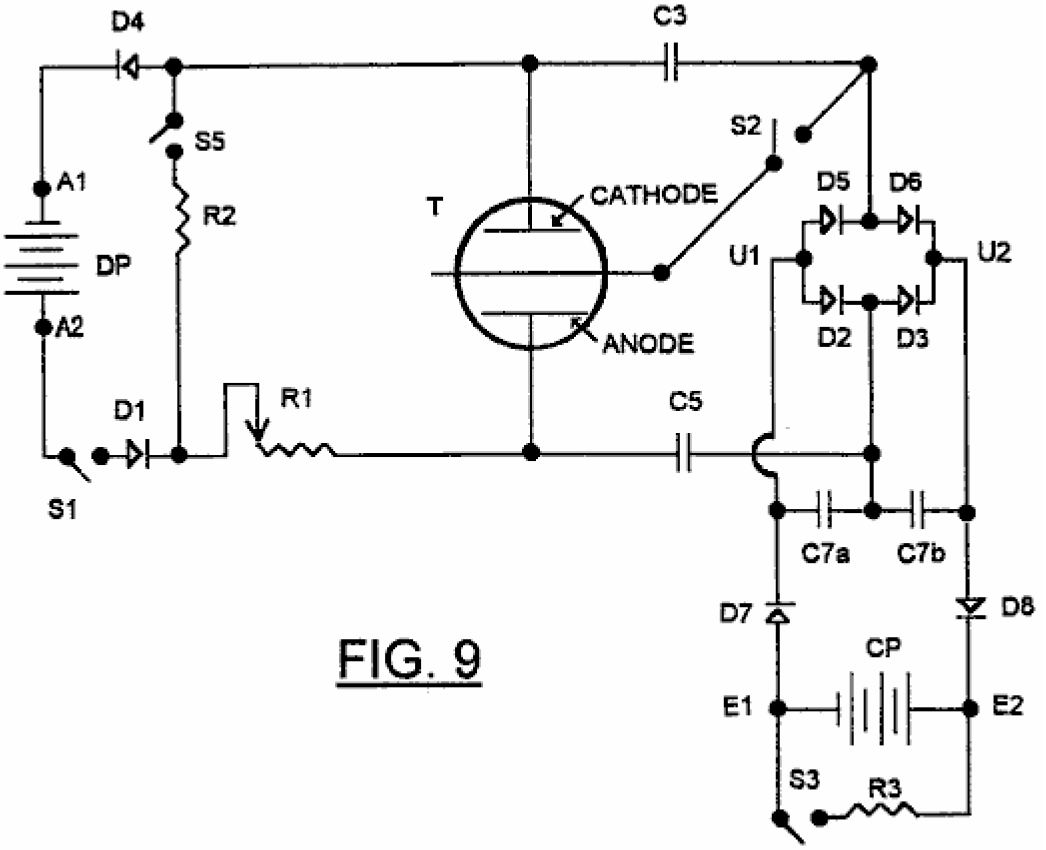

FIG. 9

Fig.9 is a schematic diagram of a preferred diode or triode PAGD circuit in accordance with the invention.

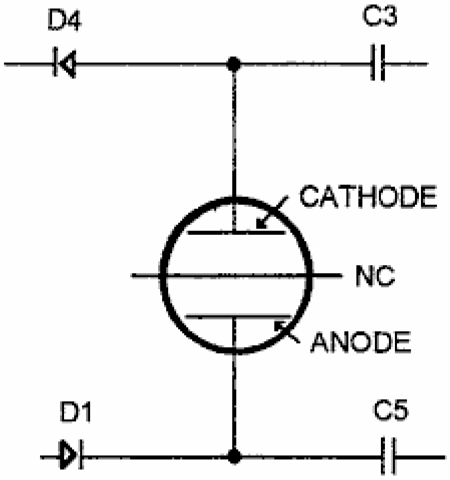

FIG. 10A

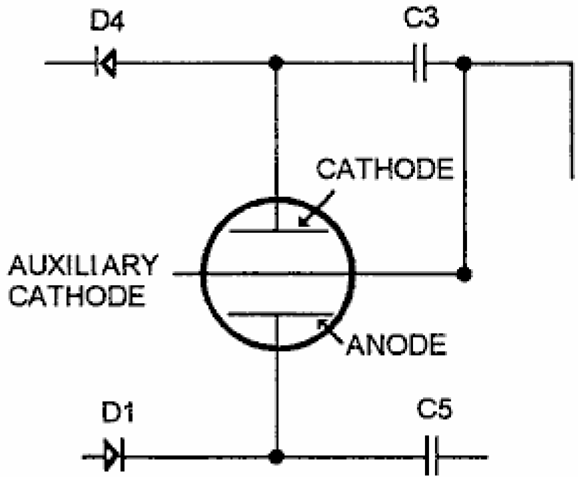

FIG. 10B

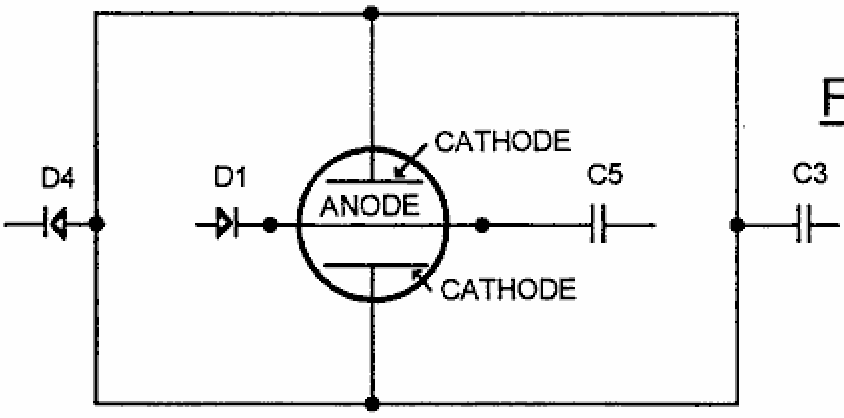

FIG. 10C

Fig.10A, **Fig.10B** and **Fig.10C** are fragmentary schematic diagrams showing variations in the configuration of the circuit of Fig.9.

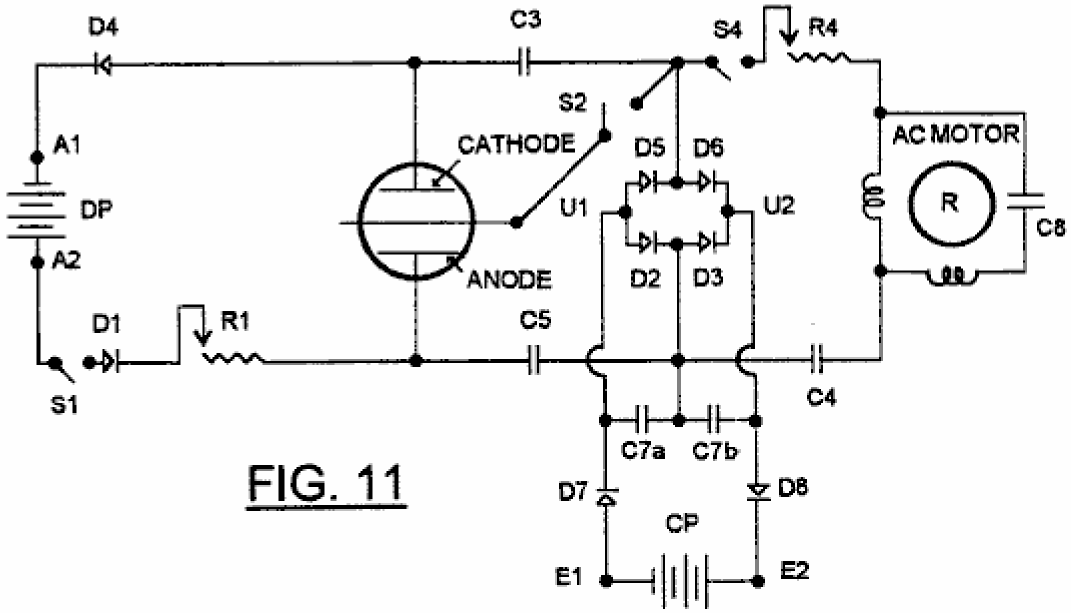

FIG. 11

Fig.11 is a modification of Fig.9, in which an electromagnetic machine, in the form of an electric motor, is connected into the circuit as an accessory electromechanical arm.

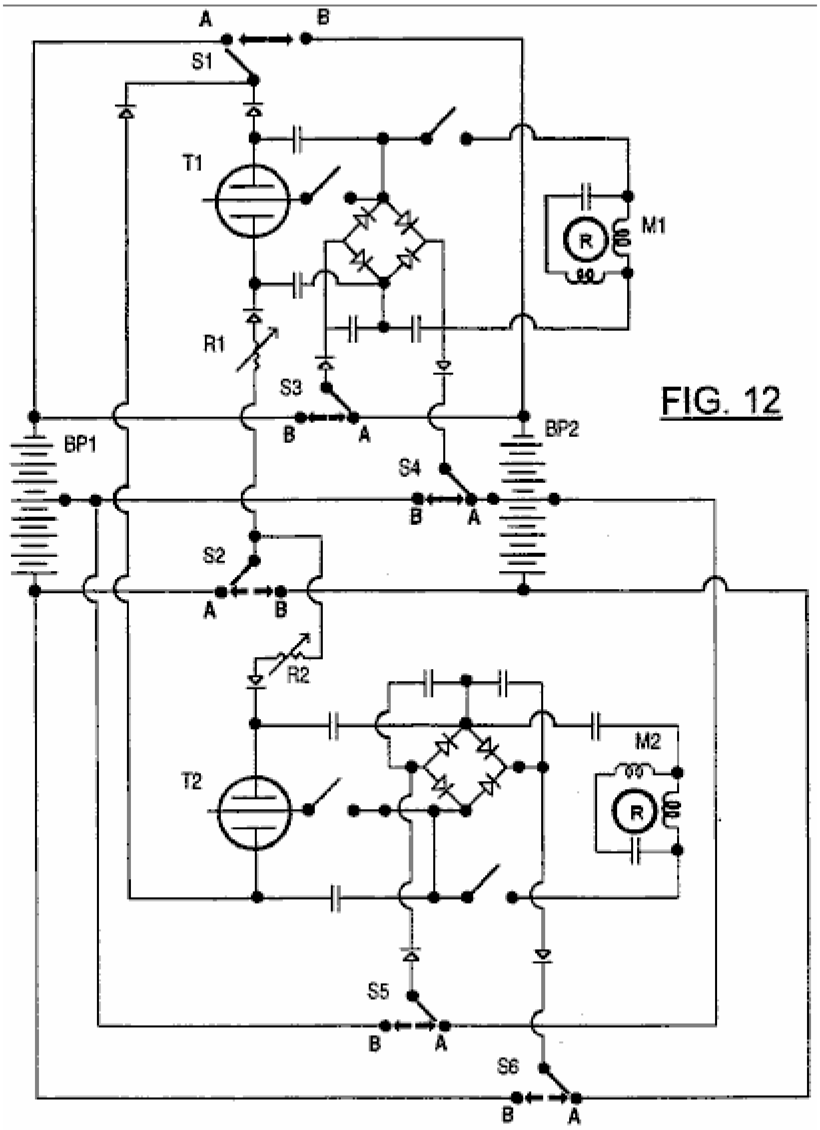

FIG. 12

Fig.12 shows a further development of the circuit of Fig.9, permitting interchange of driver pack and charge pack functions.

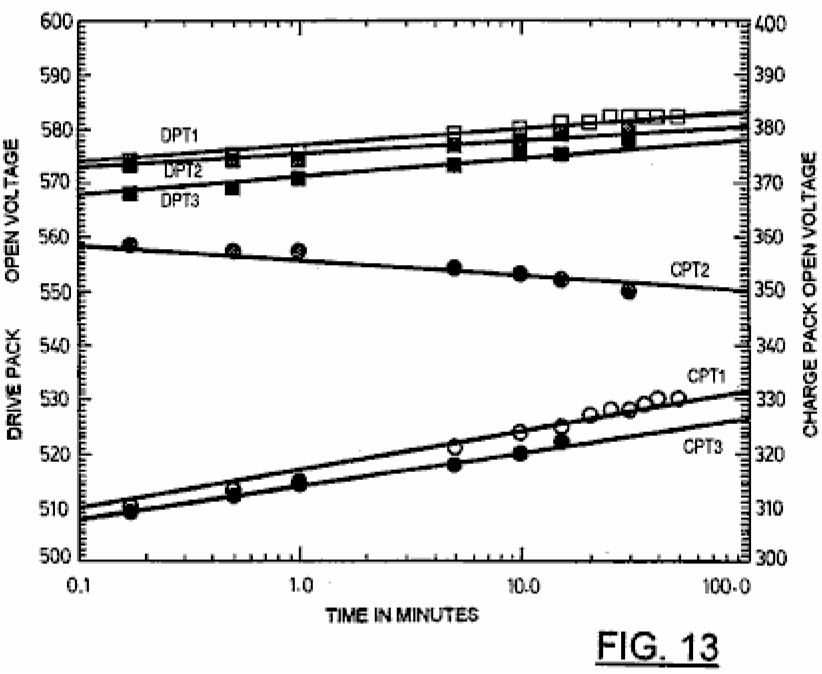

FIG. 13

Fig.13 shows open circuit voltage relaxation curves for battery packs employed in tests of the invention, respectively after pre-PAGD resistive discharge (DPT1 and CPT1), after a PAGD run (DPT2 and CPT2) and after post-PAGD resistive discharge (DPT3 and CPT3).

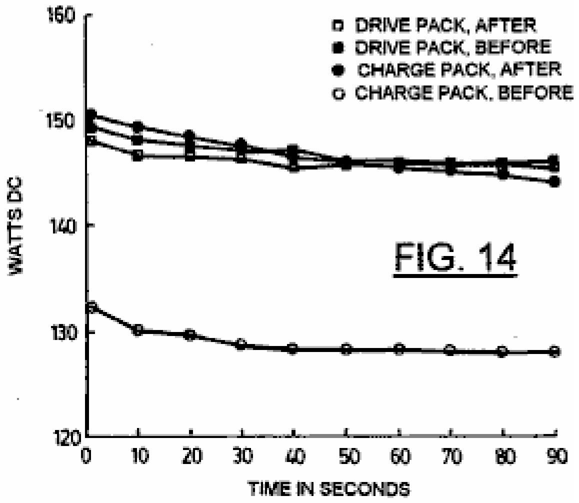

FIG. 14

Fig.14 shows an example of negligible actual power measurements taken immediately before or after a PAGD run, showing both the drive pack loss and the charge pack gain in DC Watts; DP resistance = 2083 ohms; CP resistance = 833 ohms.

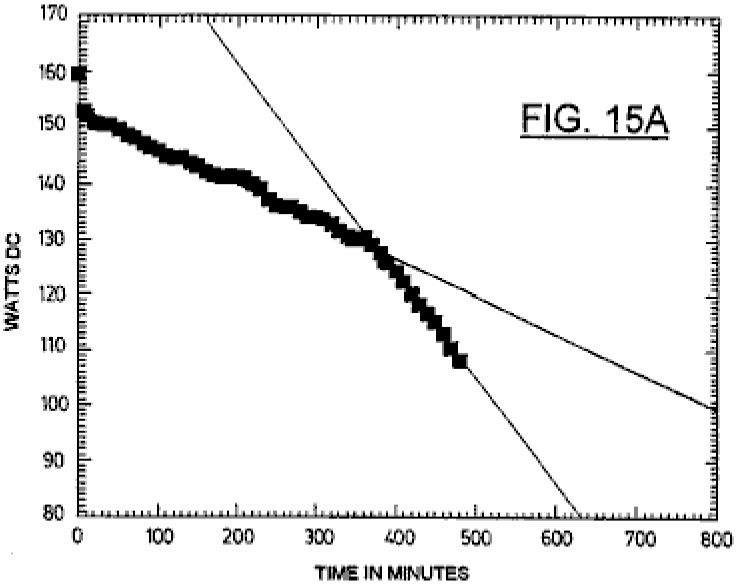

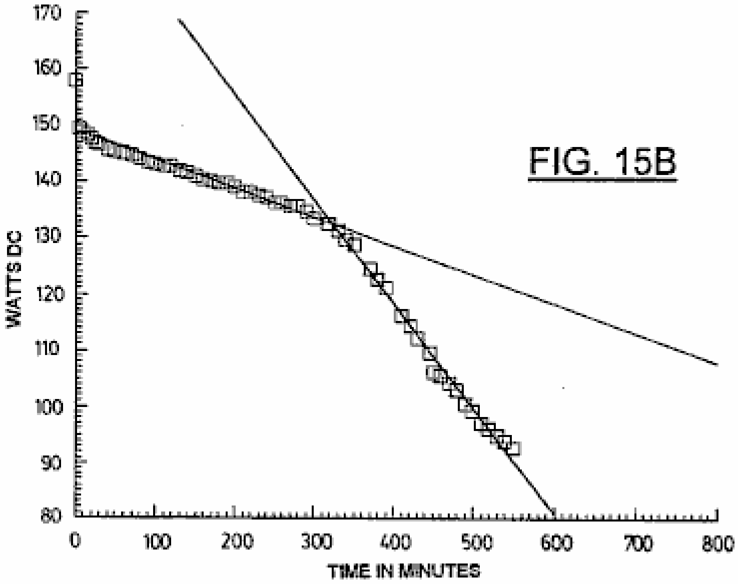

Fig.15A and **Fig.15B** show resistive voltage discharge curves for two separate lead-zero gel-cell packs utilised respectively as the drive and the charge packs; load resistances employed were 2083 ohms across the drive pack (Fig.15A) and 833 ohms across the charge pack (Fig.15B).

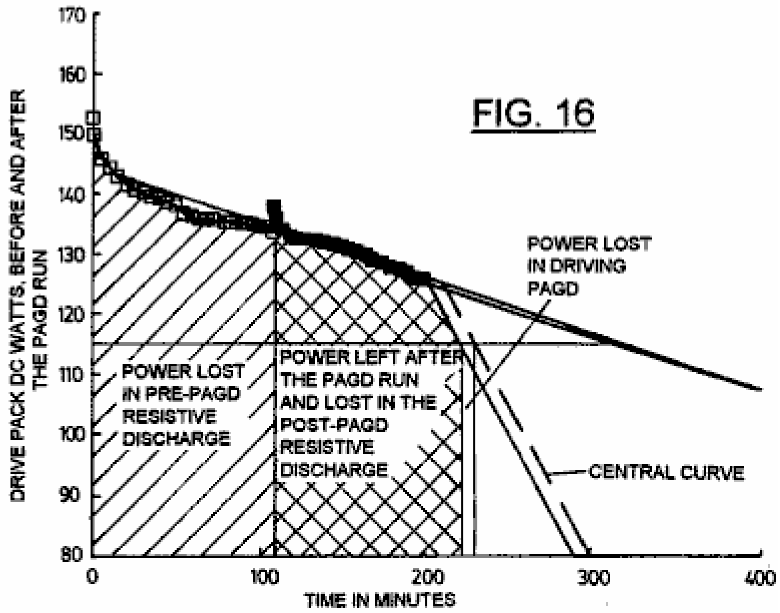

Fig.16 shows resistive discharge slopes for a drive pack before and after a very small expenditure of power in providing energy input to a PAGD run; R = 2083 ohms.

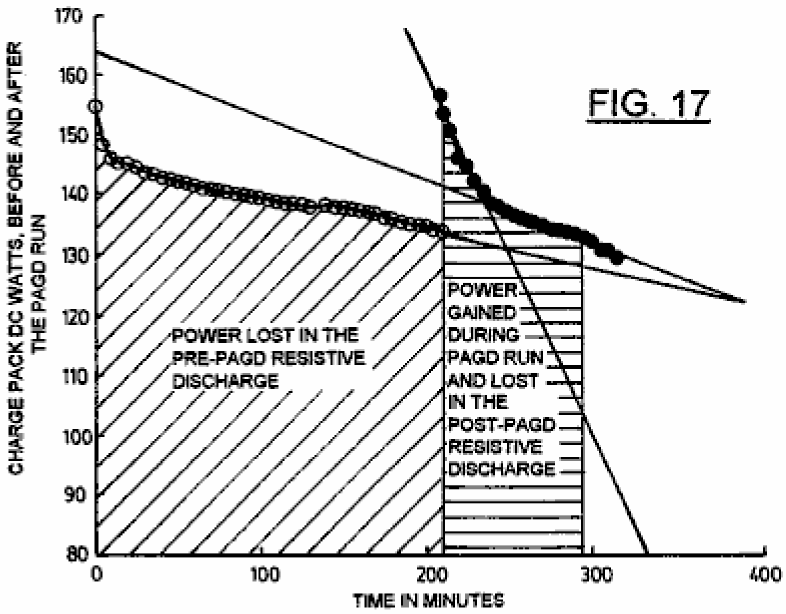

Fig.17 shows resistive discharge slopes for a charge pack before and after capturing energy from the collapse of PAGD pulses in the same test as Fig.15; R = 833 ohms.

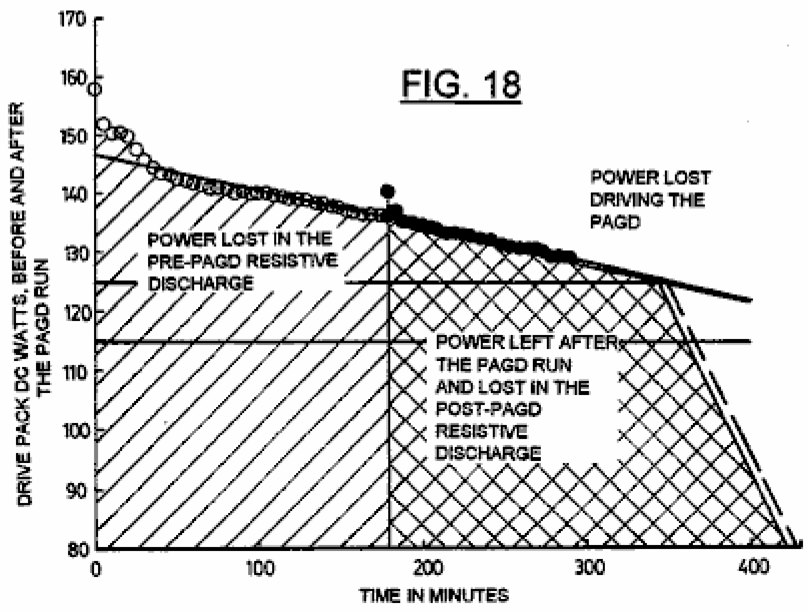

Fig.18 shows resistive discharge slopes for a drive pack before and after a very small expenditure of power in providing energy input to a PAGD run in a further experiment; R = 2083 ohms.

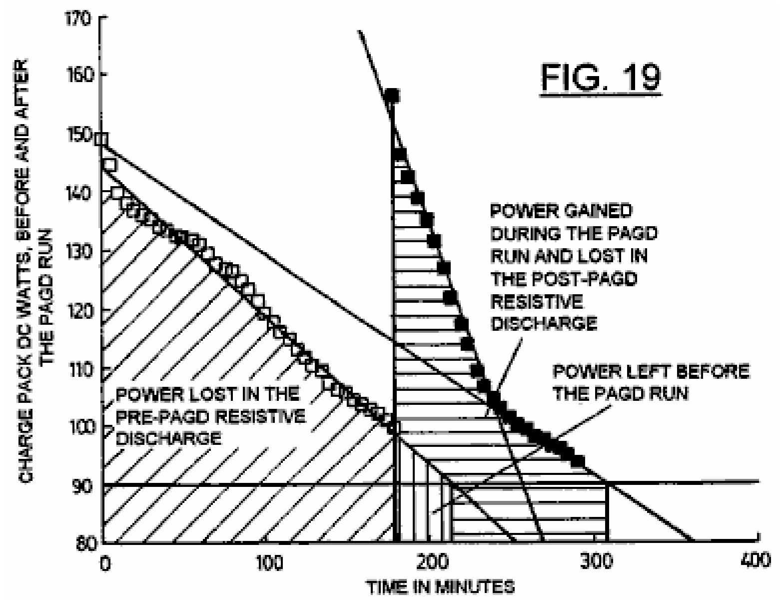

Fig.19 shows resistive discharge slopes for a charge pack before and after capturing energy from the PAGD run of Fig.18; R = 833 ohms.

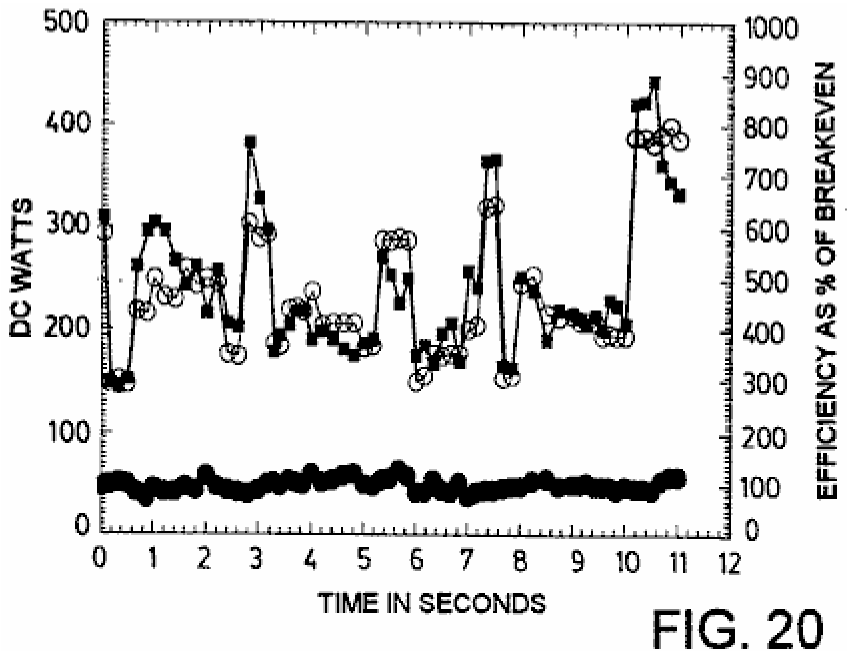

FIG. 20

Fig.20 shows an example of operational measurements taken videographically during a 10 second period for both the power consumption of the drive pack (PAGD input) and the power production captured by the charge pack (PAGD output); the two values are also related by the expression of percent break-even efficiency.

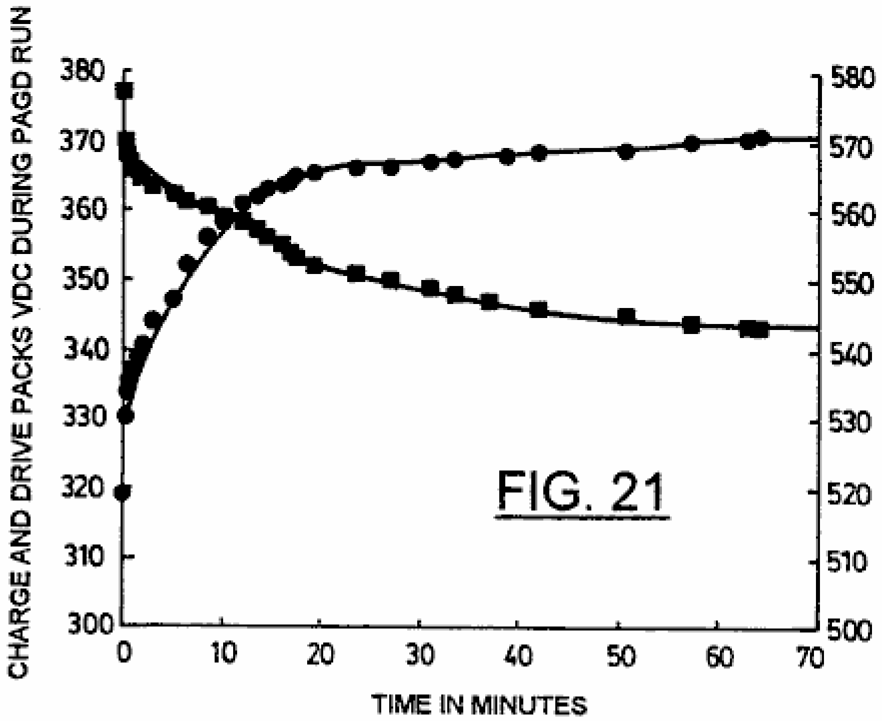

FIG. 21

Fig.21 shows variation of PAGD loaded voltage of a drive pack (in squares) compared with the PAGD charging voltage of the charge pack (in circles), during more than 1 hour of continuous PAGD operation.

DESCRIPTION OF THE PREFERRED EMBODIMENTS

The basic PAGD function and the construction of discharge tubes specifically designed for PAGD operation are described in our corresponding co-pending applications Nos. 07/922,863 (the “863” application) and 07/961,531 (the “531” application). For purposes of the experiments described below four aluminium H34 plate devices (one with 64 and three with 128 cm^2 plate areas) and three aluminium (H200) plate devices (one with 64 and two with 128 cm^2 plate areas), with inter-electrode gap lengths of 3 cm to 5.5 cm, were utilised at the indicated vacua, under pump-down conditions and with either air or argon (ultra high purity, spectroscopic grade 99.9996% pure) constituting the residual gas mixture. The pump-down conditions were as described in the “863” application. Some experiments were performed with the tubes under active evacuation, at steady-state conditions, while others utilised sealed devices enclosing the desired residual gas pressures.

The circuit designs utilised in the various experiments to be described are set out further below, and represent further developments and extensions of the circuits set forth in the “531” application.

Test equipment utilised was as follows:

An Edwards (trade mark) thermocouple gauge (TC-7) was employed for the determination of pressure down to 1 micron of mercury (0.001 Torr).

Banks of Beckman (trade mark) rms multimeters 225 and 330 (30 and 100 kHz bandwidths, respectively) were utilised for all current measurements.

Frequency meters capable of discriminating events up to 0.1 nanosecond apart, and having adjustable amplitude windows, were used. Direct analysis on a Tektronix (trade mark) dual-trace, storage scope (Model 549) was also carried out for both parameters.

Split-phase, single-phase and two-phase motors were employed, of the synchronous, induction and universal types, as previously described in the “531” application, in the accessory electromechanical arm that may be coupled to the power producing circuit described in the present application.

Large banks of 12 V, 6 Ah lead-acid gel cells (Sonnenschein (trade mark) A212/6S) were utilised either as power sources (designated as drive packs) or as accumulators of the energy (referred to as charge packs) captured by the test circuits. Charge packs made of rechargeable 9V NiCad or of nominally non-rechargeable C-Zn or alkaline batteries were also utilised.

PAGD emission areas were determined by metallographic examination of a series of craters produced by PAGDs in clean H34 cathodes, under a metallurgical Zeiss (trade mark) standard 18 microscope equipped with an epi-fluorescent condenser, very high power apochromatic objectives and a 100 W mercury lamp. For best results a focusable oblique source of light (12V halogen) was also added to the incident light.

Following our low and high applied current studies on PAGD production as set forth in the “863” application, we noticed that the AC rms value of the component associated with each abnormal glow discharge pulse varied non-linearly with the magnitude of the applied current. We originally noted the existence of a current induced shift of the entire PAGD region upward in the pressure scale: while the PAGD regime became more clearly defined as the applied constant DC was increased, the pressure required to observe the PAGD increased two to three orders of magnitude. In the course of these rarefaction studies we found that, at applied currents of 1mA or less, the rms value of the different AC waveforms associated with the consecutive regimes of the discharge (TRD --> NGDm --> AGD+PAGD) was, by more than half log, inferior to the value of the applied DC current, during the first two regimes (TRD and NGD) and reached a value equivalent to the applied current with the onset of spontaneous PAGD, at pressures < 0.1 Torr (see **Fig.1**); however, in the downward tail of the PAGD regime (down to 3×10^{-3} Torr), the AC rms current component of each PAGD again decreased to more than half log of the intensity of the applied DC value, in a manner proportional to the log of the decreasing pressure. In stark contrast, at high applied currents of about 500 mA, and aside from the high current-induced upward shift in pressure of the PAGD regime (to the point that the compression of the previous regimes on the pressure scale results in their suppressing, as was the case in the present example), the AC rms component associated with each pulse (see closed circles, **Fig.2**) is, from onset of the discharge at about 8 Torr, greater in magnitude than the value of the applied current (open circles, **Fig.2**). Under the conditions described, the distribution of the field current associated with each pulsed abnormal glow discharge approached (on a linear Y axis; not shown) an uni-modal gaussian distribution with the pressure peak at about 1 Torr, and a corresponding observed maximum of 7.5 times. higher AC rms values than the applied DC values.

We have previously described in the “863” application how the PAGD frequency is affected by several factors, namely:
the magnitude of the parallel discharge capacitance,
the value of the negative pressure for the relevant vacuum PAGD range,
the magnitude of the applied potential, the magnitude of the applied direct current,
the inter-electrode gap distance and
the area of the parallel plate electrodes.

In the “531” application we have also described how the wiring configuration (plate diode versus triode) affects the PAGD frequency by adding tungsten auto-electronic emissions from the axial electrode, to those emissions from the plate. There are other factors which limit the PAGD regime of discharge and have also been discussed in the “863” application. The following data indicates their specific effect upon PAGD frequency.

In the data presented in Table 1, control of the frequency parameter for the circuit shown in **Fig.9** is by a ballast resistance **R1** within a specific range of interest (about 800-150 ohms, for Table 1 experimental conditions), and this in turn increases the applied current which, at "high current" values (i.e. >100 mA, as for Table 1 conditions), will drive the PAGD frequency up, as previously reported in the “863” application.

Table 2 shows the effect of the progressive displacement of a given frequency, chosen as 200 PPS, with the cumulative pulse count of the same device, in the plate diode configuration. This displacement of the same frequency (cf. group numbers 1-3 of Table 2) on to higher pressure regions is shown to be promoted by the alteration of the work function of the PAGD emitting cathode, such as this is caused by the cumulative pulse count and resultant crater formation on the electrode surface. After the first million pulses, the anode facing cathode surface is completely turned over by emission sites, and this corresponds well to the threshold crossed by group 2 of Table 2. Once the cathode surfaces are broken in, the rates shown in groups 3 and 4 of Table 2, tend to remain constant.

Originally we wondered whether this might be caused by the alteration of the electrostatic profile of the plasma sheaths at the periphery of the envelope, due to the mirroring deposits that result from the sputter of ions and trapped neutral atoms (from air gases or metallic vapour) associated with the auto-electronic emission mechanism (and from further emissions triggered in turn, by secondary ionic bombardment of the cathode with molecular species present in the plasma ball formed over the primary emission site). However, reversal of the plate polarity (firing the ex-anode as a crater-free cathode) for over a million counts, followed by re-reversal to the original polarity, the entire operation being performed in air as the residual gas substrate, led to the partial recovery of the original work function for as long as the test was run (1.5×10^4 pulses), as shown by a comparison of groups 2, 4 and 5, of Table 2. From a metallographic examination of the surfaces of plates used solely as anodes, we have also concluded that prolonged PAGD operation has the effect, not only of cleaning the anode surface from surface films and adsorbed gases, as ionic bombardment promoted by electromagnetic induction coils does, but it also does more: it polishes the target surface and smoothes it by a molecular erosive action. Observations of the surface of reversed cathodes, shows the same smoothing and polishing effects observed in exclusive anodes. Thus the recovery of the PAGD rates promoted by polarity reversal of the plates is not a function of the sputter-promoted mirroring deposits on the envelope wall, but a function of the actual work-function of the emitting cathode.

Another variable that interacts with the PAGD frequency is the molecular nature of the residual gas: Table 3 shows the differential frequency response of air with a halogen quencher, argon, for the same pulse generator employed in the tests of Table 2. It is apparent that argon obtains much higher rates of AGD pulsation for the same range of negative pressure, for the same "broken in" cathode, than does the air mixture. All these measurements were taken at cathode support-stem temperatures of 35^0C.

Time of operation is also a variable affecting the frequency and operating characteristics of the cathode, as it becomes expressed by the passive heating of the cathode, an effect which is all the more pronounced at the higher pressures and at the higher frequencies examined. Utilising the triode circuit discussed in the next section, the pulse rate of a PAGD generator with 64 cm^2 plates can be seen (see **Fig.3**) to decrease, at a negative pressure of 0.8 Torr, from 41 PPS to the operating plateau of 6 PPS within 15 minutes of continuous operation, as the temperature of the cathode support increased from 19^0C to about 44^0C. As the temperature plateaus at about 51^0C +/- 1^0C., so does the pulse rate at 6 PPS, for the remaining 48 minutes of continuous operation.

However, in order to confirm this time-dependent heating effect and threshold, we also performed the same experiment, utilising the same circuit and the same negative air pressure, with twice as large a cathode area (128 cm^2, which should take nearly twice as long to heat), being operated for 18 one-minute long continuous periods equally spaced apart by 15 minutes of passive cooling, with the cathode stem always at 19.7^0C to 21^0C., room temperature at the start of each period. The results surprised us, inasmuch as they showed that for a larger area tube which takes longer to heat to the same temperatures at comparable rates of PAGD triggering, one could observe a much earlier frequency reduction (by half, within the first 5 minutes or periods of interrupted functioning) in the absence of any significant heating effect (< 1.5^0C) of the cathode (see **Fig.4**). Repetition of these experiments has led us to conclude that, as shown in **Fig.5**, the variable responsible for this repeatedly observed reduction in the PAGD frequency, when the PAGD operation sequence is systematically interrupted, is the state of charge/discharge of the battery pack (the charge pack) at the output of the triode circuit in question: the PPM rates in **Fig.5** decrease rapidly with the steepest rate of charging of the charge pack and the fastest recovery rate of its open circuit voltage; above a given state of charge, when the open voltage of the charge pack climbs more slowly (> 340 V), in a log fashion, the PPM rate stabilises at its plateau values.

Confirmation of the importance of the charge pack in the PAGD function of the present circuitry here considered, comes from the fact that the size (the number of cells) and the intrinsic capacitance of the charge pack affect the PAGD frequency dramatically (see Table 4): increasing the charge pack size of 29 cells to 31, by 7% leads to a 10-fold reduction in frequency; further increases in the number of charge pack cells extinguishes the phenomenon. On the upper end of the scale, this effect appears to be tied in to restrictions that it places on the ability of the larger charge packs to accept the discharge power output once the charge pack voltage exceeds the PAGD amplitude potential. All of these measurements were conducted with the same 128 cm^2 plate PAGD generator, at a pressure of 0.8 Torr and in the triode configuration (see **Fig.9**).

Other factors can also affect the frequency: the motion of external permanent magnetic fields oriented longitudinally with the inter-electrode gap, external pulsed or alternating magnetic fields, external electrostatic or electromagnetic fields, specific connections of the earth ground, and the presence of a parallel capacitative, capacitative-inductive or self-inductive arm in the circuit, such as we have described for our electromechanical PAGD transduction method as described in the “531” application.

Analysis of the modulation of PAGD amplitude is simpler than that of its frequency, because fewer factors affect this parameter:
(1) magnitude of the applied potential,
(2) inter-electrode gap distance and
(3) the negative pressure, as shown in the “863” application, for "low" applied currents.

As the magnitude of the applied potential itself is limited by the gap and the pressure, to the desired conditions of breakdown, the important control parameter for the PAGD amplitude is the pressure factor. This is shown in **Fig.6** and **Fig.7**, respectively for "low" (5 mA) and "high" (about 500 mA) applied currents and for the same plate diode configuration of a H34 Al 128 cm^2 plate PAGD generator (5 cm gap), in the simple circuit described in the “863” application; it is apparent that both positive and negative components of the amplitude of these pulses in the oscillograph, are a function of the pressure, but the maximum cut-off limit of our equipment, for the negative component (at 240 volts for the "low" current experiment and at 120 volts for the "high" current), precluded us from measuring the peak negative voltage of these pulses.

However, rms measurements of the pulse amplitude at the plates and DC measurements at the circuit output to the charge pack indicate that the negative component increases with decreasing pressure to a maximum, for a given arrangement of potential and gap distance; no pressure-dependent bell shape variation of the pulse amplitude, as that seen for the positive component at "high" applied currents (**Fig.7**) is observed with the negative amplitude component. For the typical range of 0.8 to 0.5 Torr, the rms value for pulse amplitude varies from 320 to 480 volts, for a 5.5 cm gap distance and applied DC voltages of 540 to 580 volts. PAGD amplitude is a critical factor for the design of the proper size of the charge pack to be utilised in the optimal circuit.

The development of the circuits to be described stemmed from fundamental alterations to the principles implicit in our previous methods of electromechanical transduction of AGD plasma pulses as described in the “531” application. Whereas this electromechanical coupling (capacitative and self-inductive), utilised directly, energises the AGD pulses inverted from the DC input by the vacuum generator, the purpose of the development that led to the presently described experiments was to capture efficiently, in the simplest of ways, most of the pulse energy in a closed circuit, so that power measurements for the energy transduction efficiency of the observed endogenous pulsation could be carried out. Ideally, comparative DC power measurements would be performed at both the input and output of the system, taking into account the losses generated across the components; this would overcome the measurement problems posed by the myriad of transformations implicit in the variable frequency, amplitude, crest factor and duty-cycle values of the PAGD regime, and necessitated some form of rectification of the inverted tube output.

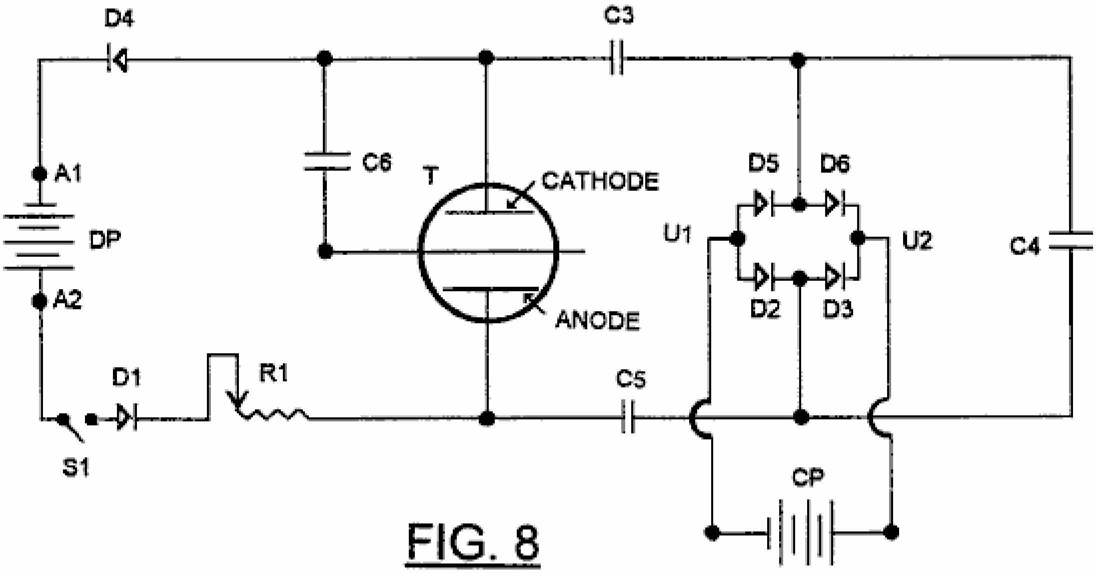

FIG. 8

From the start our objective was to do so as simply as possible. Early circuits utilising half-wave rectification methods coupled in series to a capacitative arm (for DC isolation of the two battery packs), with the charge pack also placed in series, showed marginal recoveries of the energy spent at the PAGD generator input. Attempts at inserting a polar full-wave rectification bridge led, as shown in **Fig.8**, to the splitting of the capacitor into capacitors **C3** and **C5**, at the rectification bridge input, and capacitor **C4** in series with both capacitors, all three being in a series string in parallel with the PAGD generator. Under these conditions a DC motor/generator could be run continuously in the same direction at the transversal output (**U1** and **U2**) of the bridge; but if this inductive load was replaced with a battery pack CP (charge recovery pack), either the parallel capacitor **C4** had to remain in the circuit, for the diode configuration or, less desirably, a further capacitor **C6** could replace **C4** and connect one electrode, preferably the cathode **C**, to the axial member of the discharge tube **T**, thus resulting in a first triode configuration as actually shown in **Fig.8**. Energy recovery efficiencies of the order of 15% to 60% were obtained utilising **C6** in this manner, but measurements of the potential and currents present at the output from the rectifier bridge were substantially lower than those obtained using optimal values of **C4**. Effectively, under these conditions, much of the power output from the tube was never captured by the output circuit formed by the second, right hand arm of the system and, being prevented from returning as counter-currents to the drive pack **DP** by diodes **D1** and **D4**, was dissipated and absorbed by the inter-electrode plasma, electrode heating and parasitic oscillations.

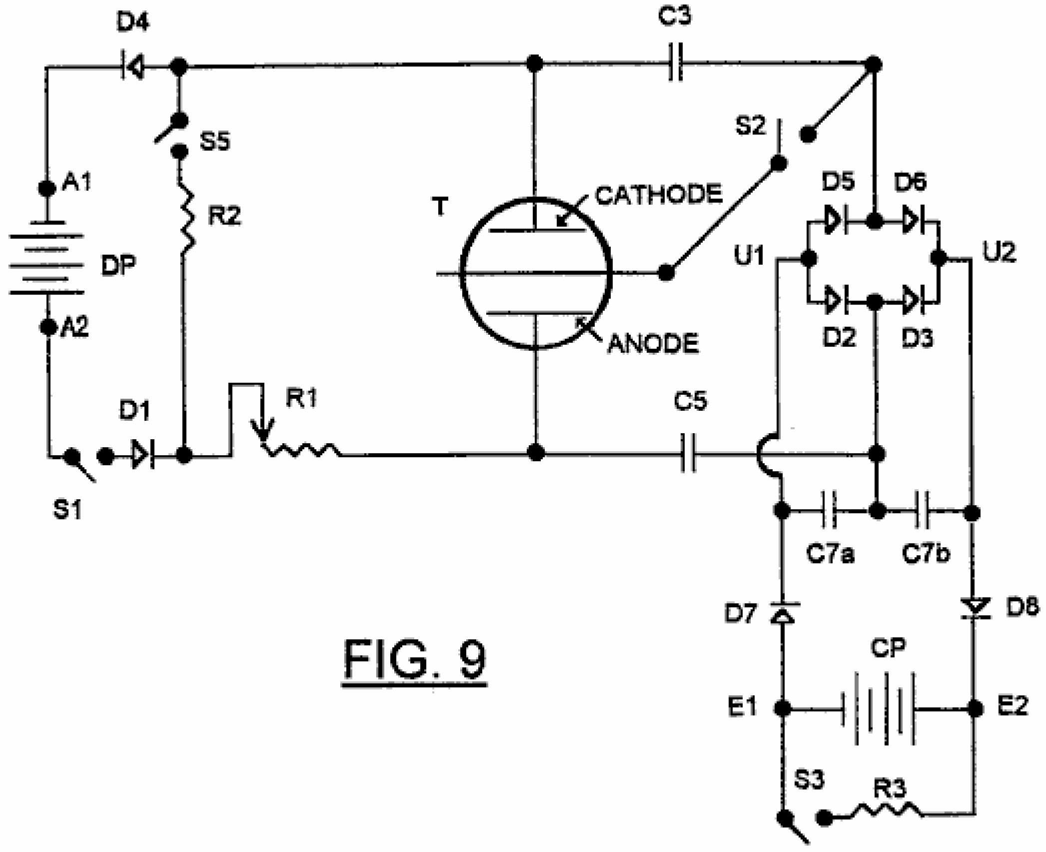

FIG. 9

Solutions to this problem were explored using the circuit shown in **Fig.9**, which still maintains the necessary communication link for the quasi-sinusoidal oscillation of the capacitatively stored charges at the input and outputs of the rectification bridge, but integrated the functions of capacitor **C4** into the single rectification circuit, in the form of an asymmetric capacitative bridge **C7a** and **C7b** placed transversally to the capacitative bridge formed by **C3** and **C5** and in parallel with the charge pack **CP** at the output from the rectification bridge **D5, D6, D2, D3**.

This second capacitative bridge is so disposed as to have its centre point connected to the anode **A** through capacitor **C5**. If the axial member of the Tube **T** were to connect to the junction of **D2** and **D3** instead of at the junction **D5-D6**, the function of bridge **C7a** and **C7b** would be connected to the cathode **C** through capacitor **C3**. The capacitative bridge is insulated from the charge pack whose voltage it stabilises, by rectifiers **D7** and **D8**, which also prevent leakage of charge across **C7a** and **C7b**.

The anode and cathode oscillations generated by the electrostatic charge transduction through **C3** and **C5** into the poles of the charge pack are trapped by the transversal transduction of the **C7** bridge, at the outputs from the rectification bridge, of which the oscillation has to become split between the bridge inputs into half-waves, for electrostatic transduction and full wave rectification to occur. In fact, under these conditions, removal of the **C7** bridge will suppress the PAGD phenomenon, unless other circuit variables are also altered. The transversal bridge is thus an essential piece of this novel circuit. Variations in the circuit as shown in **Fig.10** were then studied, the first two being selectable utilising switch **S2** (**Fig.9**).

The presence of the capacitative bridge effectively reduces the dynamic impedance of the charge pack **CP** so that the output circuit approximates to a characteristic in which it presents a very high impedance to the tube **T** at potentials below a certain level, and a very low impedance at potentials above that level.

With this modified circuit, more effective recovery of the energy produced by collapse of the PAGD pulses is possible, with more effective isolation from the input circuit utilised to trigger the pulses. Under these conditions, the energy captured by this circuit at the output, is not directly related to that utilised in triggering the pulses from the input. The attainment of this condition critically depends on the large capacitance of the transversal bridge being able to transfer the output energy from the tube **T** into the charge pack **CP**. Under these conditions, we have found, as will be shown below, that the large peak pulse currents released by collapse of the PAGD pulses released more energy than is used to trigger them, and these findings appeared to tally with other observations (abnormal volt-ampere characteristics and anomalous pulse currents, etc.) associated with the anomalous cathode reaction forces that accompany the auto-electronic emission-triggered PAGD regime. Experiments so far indicate that the power output can be increased proportionately to the series value of **C3**, **C5** and the two identical **C7** capacitors.

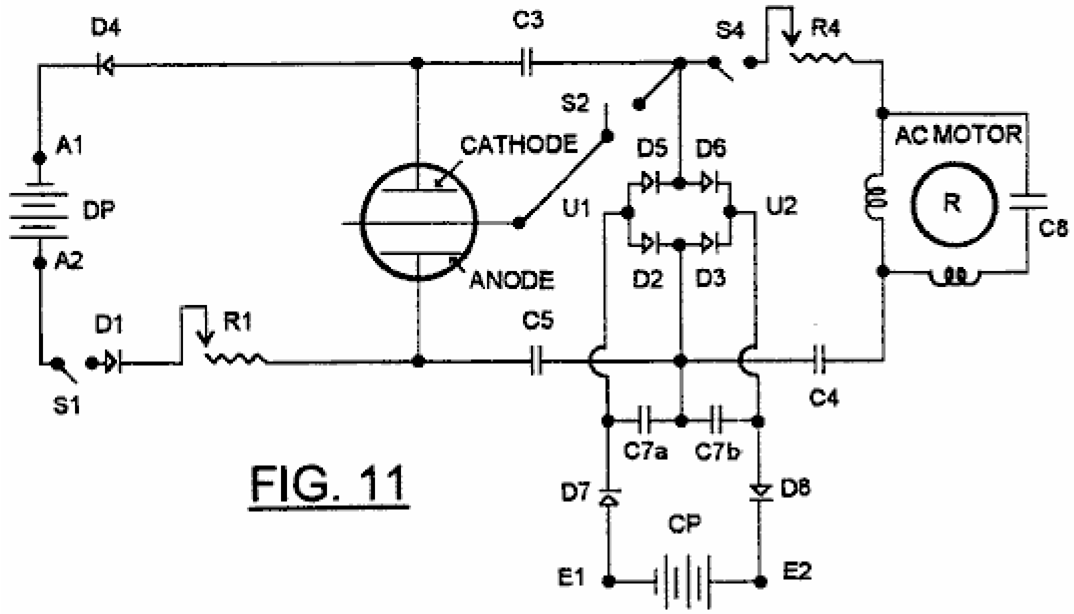

FIG. 11

The circuit of **Fig.10** can be integrated with a circuit such as that disclosed in the “863” application as shown in **Fig.11**, in which a part of the energy recovered can be shunted by the switch **S4** into an induction motor **M1** having rotor **R**, to a degree determined by the adjustment of potentiometer **R4** and the value selected for **C4**.

The circuit of **Fig.11** can be further developed as exemplified in **Fig.12** to include configurations which provide switching permitting interchange of the functions of charge packs and the drive packs, it being borne in mind that the nominal potential of the drive pack must be substantially higher than that of the charge pack, the former needing to exceed the breakdown potential of the tube at the beginning of a PAGD cycle, and the latter to be less than the extinction potential.

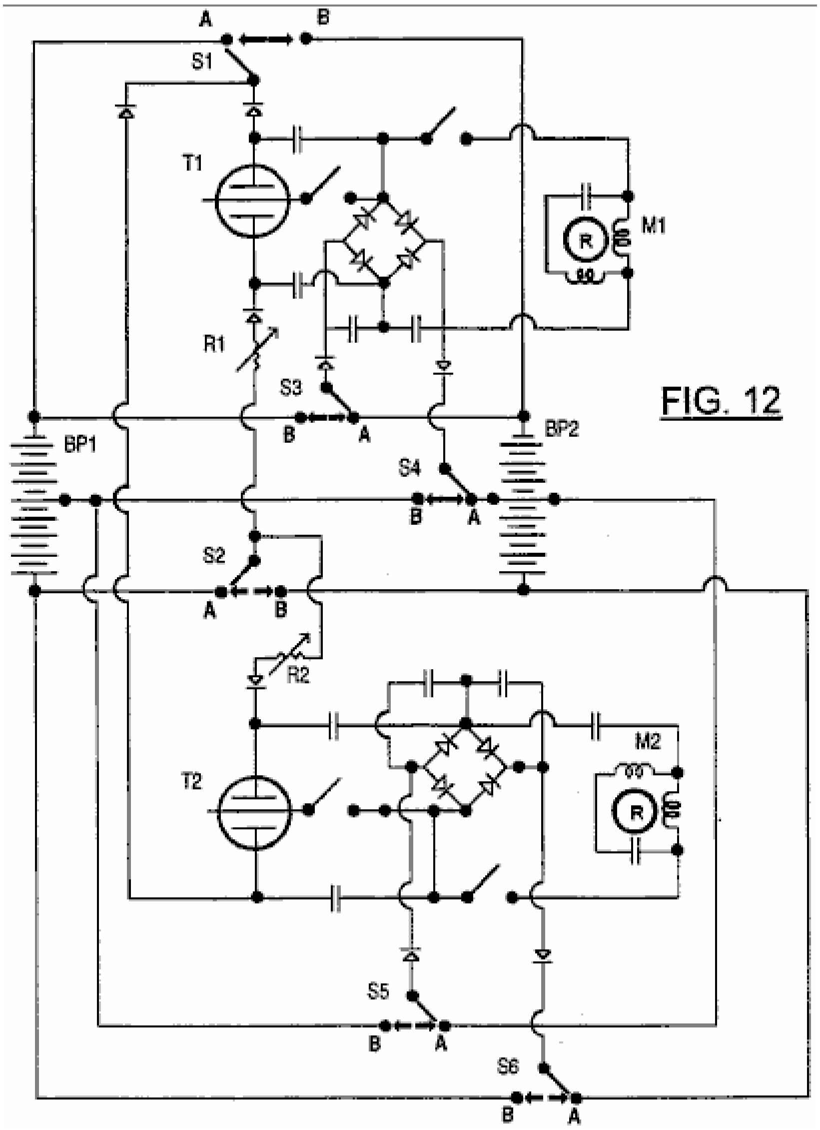

FIG. 12

Fig.12 essentially represents a duplication of the circuit of **Fig.11**, the two circuits however sharing two identical battery packs **BP1** and **BP2**, and being provided with a six pole two way switch, the contact sets of which are identified as **S1, S2, S3, S4, S5** and **S6**. When the contacts are in position **A** as shown, battery pack **BP1** acts as a drive pack for both circuits, with the upper half (as shown) of the battery pack **BP2** forming the charge pack for the upper circuit, and the lower half forming the charge pack for the lower circuit. When the pack **BP1** is at least partially discharged, the switch is thrown so that contacts move to position **B**, which reverses the function of the battery packs thus allowing extended operation of the motors in each circuit each time the switch is thrown.

Based on the manufacturer's data, and using current values within the range of our experimentation as discussed in the next sections, an optimal discharge cycle for a fully charged 6.0 AHr battery pack at 0.300 A draw is 20 hours, as claimed by the manufacturer, and this corresponds to a cycling between 100% (12.83 V/cell open circuit and load start voltage) and < 1% (10.3 V/cell load voltage) of the battery's absolute charge capacity. Even though the discharge mechanism is a time cumulative process with a log function, the discharge can, within 4 to 5 hour time segments (or periods with 20%-25% of the full range), be regarded as practically linear with time. This trait, or linearisation of the discharge slope, becomes more marked with advancing age and decreasing absolute storage capacity of the cells.

The proportionality between open circuit voltage and the percentage of residual relative capacity for these cells when new (uncycled and not yet aged) is uniform over 98% of the permissible charge capacity withdrawal. In practice this translates into a slope that becomes steeper with time, while the absolute storage capacity diminishes. In turn, this decreasing absolute capacity of the cells results in shorter load discharge times and their further linearisation.

A circuit in general accordance with **Fig.9**, employed in the studies reported in this and the following sections, utilises a drive pack of 46 12 V Lead acid gel-cells each with a 6.0 Ah rating, and a charge pack with 28 or 29 12 V identical cells. The charge pack was cycled anywhere from 11.2 V to 12.8 V/cell (open circuit voltages), within the proportional region of the relative capacity slope, to yield a capacity increment in the order of 50% (e.g. from

20% to 70%), anywhere within the range of 2% to 100% of its total charge capacity, assumed for now as invariant. The charging process, hereinafter referred to as a PAGD run, took about 20-30 minutes under optimal conditions. The drive pack typically consumed, in the same period of time, 4% to 11% of its initial total capacity , its open circuit voltage typically falling 0.1 V to 0.2 V per cell after a PAGD run, within the open circuit range of 12.8 V/cell (100% relative capacity) and 11.2 V/cell (about 2%). At the 100% capacity benchmark, the drive pack would theoretically have 20 h x 46 cells x 12.83 V/cell x 0.3 A = 3.5 kWh, and the charge pack, for example, 20 h x 29 x 12.83 V/cell x 0.3 A = 2.2 kWh. Since the capacity per cell is linear with the open circuit voltage within the proportional range, as claimed by the manufacturer, we projected the open circuit voltage intercepts on the manufacturer's proportional curve in order to determine the residual percentage of the total relative capacity and the standard hours of operation left, from any experimental open circuit voltage measurements.

Three pulse generators (one 64 cm^2 and two 128 cm^2 plate areas) were employed in these studies; they were operated in PAGD runs at 1-120 pulse/second rates, within a negative pressure range of 0.2 to 0.8 Torr and with applied direct currents of 0.2 to 0.6 A.

Both drive and charge packs utilised cells which were bought new at the same time and had initial charge values of 12.4 to 12.55 V/cell (open circuit). These batteries are capable of energy densities of 33-35 WHr/Kg. However, the experiments shown in Table 5 are selected from a series that spanned nearly 12 months, beginning 6 months after purchase; hence, loss of absolute storage capacity by the batteries had occurred in the intervening time, as a function of both age and charge/discharge cycle life.

Measurements of the open voltage of either drive (D) or charge (C) (see column 2, Table 5) packs for 8 separate experiments, all utilising the triode configuration, were performed before (b) and after (a) a PAGD run (see columns 3 and 4), at either 15 or 30 minutes (see column 26) of the open circuit voltage relaxation after a PAGD run was terminated. Corresponding open circuit voltages per cell are shown in column 5, and the percentages of the predicted total relative charge capacity resulting from the intercepts on the manufacturer's proportional curve are shown in column 6, Table 5. Equivalent maxima for the theoretical hours of operation left are shown in column 7, the percentage change in relative capacity arising as a consequence of either charge pack charge capture (capacity gained) or of drive pack output (capacity lost) is shown in column 8. Translating the intercepts into power units yields the values shown in column 9, Table 5, for total kWh left in each pack before and after PAGD production, those shown in column 10 for the actual power gained and lost during the periods of operation (presented in column 12) and those shown in column 13 for the power predicted to be gained or lost per hour of PAGD production.

On the basis of the experimental open voltage values and their intercepts, the predicted net kWh values per hour of PAGD energy production (after deduction of measured losses) and the corresponding experimental break-even efficiencies (where breakeven = 100%) are presented, respectively, in columns 14 and 15. The PAGD frequency per second is shown in column 11; the number of 12 V cells, in column 16; the tube ID, in column 17; the cathode (and anode) area (s), in column 18; the plate material, in column 19; the input ballast utilised (R1, FIG. 9), in column 20; the size of each capacitor (C3 or C5) of the tube output bridge, in column 21; the size of each capacitor (C7a or C7b) of the transversal capacitative bridge, in column 22; the status of **S4** and thus, of the parallel and auxiliary electromechanical arm (see **Fig.11**), in column 23; the negative air pressure in column 24; the gap distance between the plates, in column 25; and columns 27,28 and 29, show the status of the elements of the switched on parallel electromechanical arm of the circuit--the parallel **C4** capacitor, the motor input resistor **R4** and the motor revolutions per minute (measured stroboscopically), respectively.

From these figures of Table 5, and utilising the data for the two first examples shown, we calculated the predicted performance of the system based on the open voltage measurements. In the first example, where the system was run continuously without interruption, the charge pack increased the percentage of its total capacity by 43% (a two-fold increase in capacity) and, during the same period, the driver pack decreased the percentage of its total capacity by 7% (an approximately 10% decrease in capacity relative to the percentage of residual total capacity at the start, i.e. 77%) (cp. columns 6 and 8, Table 5). Subtracting the predicted initial total energy (0.835 kWh) available to the charge pack before the experimental run (first line of column 9, Table 5) from the predicted total energy (1.823 kWh, second line of column 9) available to the charge pack after the PAGD charge run, gives us the total energy gained by the charge pack: 0.988 kWh (column 10) in 21.5 minutes (column 12) of continuous PAGD performance.

Conversely, subtracting the predicted final total energy (2.4 kWh) available to the driver after the experimental run (fourth line of column 9, Table 5) from the predicted total energy (2.66 kWh, third line) available to the driver before the PAGD charge run, gives us the total energy lost by the drive pack: 0.26 kWh in 21.5 minutes. If we divide the total available energy gained by the charge pack, by the total energy lost by the drive pack, we obtain a surplus factor of 3.9., or 388% of the break-even point (column 15). The same values result from dividing the charge pack % of total capacity gain by the drive pack % of total capacity lost, and then down-scaling this value by multiplying it by the typical scale factor for the two packs, 29 / 46 = 0.63 times.

In an analogous fashion, we analysed the results for the second example shown in Table 5. Here, the charger increased the percentage of its total capacity by 45.5% (a 22.75 fold increase in estimated total relative capacity) and, during the same period, the driver decreased the percentage of its predicted total capacity by 7% (about a 17.5% decrease in capacity relative to the percentage of residual total capacity at the start, i.e. 40%). By dividing the predicted total available energy gained by the charge pack (0.962 kWh/18 minutes) by the expected total energy lost by the driver pack (0.246 kWh/18 minutes) we obtain a surplus factor of 3.9 times, or 391% of the break-even point. This corresponds to an interrupted, total sequential run of 18 minutes, each minute-long run being separated by a cooling and voltage relaxation period of 15 minutes before the next run is carried out, at an average PAGD frequency of 61 PPS.

Analysis of the remaining results illustrates how a number of PAGD controlling parameters interact to determine conditions for effective maintenance of a PAGD regime. The lower gain and higher loss per unit time registered for the third run of Table 5, which results in the lower break-even efficiency of 230% and a smaller net power production rate than before (power estimates of 1.396 kWh/h of PAGD operation vs 2.387 kWh/h, for the second run, Table 5) illustrate, for example, the combined effect of lowering the pressure (0.8 to 0.7 Torr) and running the PAGD continuously (the heating effect), both of which depress the PAGD frequency. The fourth run of Table 5 identifies the continuous performance of a "broken in" softer grade of aluminium (column 19), having a lower work-function (as determined from the higher PAGD frequency spectrum) than the harder H34 plates of the previous examples, and shows that, despite the series value of the total capacitance being higher (5,333 mF vs 4,030 mF for runs one through three), and despite the higher vacuum (0.2 Torr), the lower work-function results in a higher frequency; however, even though this run registers a predicted higher break-even efficiency (310%) than the previous experiments, these conditions result in a 4 / 5-fold lower estimate of net power produced, when compared to the previous three PAGD runs.

PAGD runs 5 and 6, Table 5, illustrate the effect of switching on the auxiliary electromechanical arm of the circuit shown in **Fig.11**. Increasing the amount of charge capacitatively shunted into the electromechanical arm by higher **C4** values (column 27), and increasing the current that feeds the squirrel cage induction motor utilised by lowering **R4** (column 28), results in a power capture by the charge pack that registers an energy loss (predicted to be 96% efficient, falling short 4% of break-even recovery), as most of the tube output power is spent in the electromechanical arm and its motor effect. Furthermore, under the conditions of maximum electromechanical action, the drain imposed on the drive pack becomes considerable (see loss in columns 10 and 13), even if the **C3** and **C5** values are reduced, column 21, Table 5). These runs also illustrate how the motor appears to function as an electrical induction generator having rpm values much higher than the synchronous values prescribed by the frequency of the PAGD (column 29, Table 5).

The extremely large break-even efficiency of PAGD run 5, Table 5, indicates that with selected values of **C4** and **R4**, it is possible to operate the motor in the auxiliary arm and still accumulate excess energy from the PAGD production in the charge pack.

Runs 7 and 8 illustrate results obtained for 64 cm^2 plates, and a shorter inter-electrode gap distance, for two pressures (0.8 and 0.5 Torr), the device being open to a rotary pump manifold in the first instance and sealed from the pump, in the second case. Despite the lower vacuum, the higher pulse frequency (32 vs 5 PPS) and break-even efficiency (906% vs 289%) registered by run 8 when compared to run 7, are a consequence of the method of run 8, which was interrupted systematically by 5 passive cooling periods, as in the case of run 2, whereas run 7 was continuous. This again resulted in higher average PAGD frequencies (at lower pressures), a predicted two-fold greater gain and a predicted two-fold smaller loss (columns 13 and 14) for run 8.

Fig.13 shows curves representing the slopes of the open circuit relaxation voltages, which are linear with the log of time elapsed from cessation of discharge, for both drive and charge packs, in the same run 8 set out in Table 5. The experiment in its entirety consisted of preliminary resistor-loaded measurement discharges and their corresponding open circuit voltages from the moment of cessation of the resistive discharge (illustrated, respectively, by the open squares of DPT1 for drive pack relaxation time 1, and by the open circles of CPT1 for charge pack relaxation time 1), followed by their relaxation rates in the wake of the PAGD production (the hatched squares of DPT2 for drive pack relaxation time 2, and the hatched circles of CPT2 for charge pack relaxation time 2), and finally, by the relaxation rates from the final resistor-loaded measurement discharges (the black squares of DPT3 for drive pack relaxation time 3, and the black circles of CPT3 for charge pack relaxation time 3). Discharge resistances were 833 ohms for the charge pack, and 2083 ohms for the drive pack in all cases, corresponding to resistors **R3** and **R2**, respectively, of **Fig.9**. This methodology will be examined in greater detail below. It is apparent that, after every load period, be this resistive (CPT1, DPT1, CPT3 and DPT3) or due to PAGD operation (DPT2), the relaxation slope is positive; as shown from slopes CPT1 and DPT1, the log time proportionality of the open circuit voltage relaxation, under these conditions, tends to plateau after about 30 minutes. The exception to this general behaviour lies in the voltage relaxation slope CPT2, which is negative and reflects the charge accumulation occurring in the charge pack and obtained by capture of energy produced during PAGD operation, triggered by the energy drawn from the drive pack during load time 2.

As a first approximation of electrical power generated and consumed by the energy conversion system of the invention, the previous open circuit voltage method is of significance in showing the basic trends involved in interaction of the operating parameters. However, in all likelihood, it overestimates the actual values of electrical power consumed and generated, for a variety of reasons. First, it assumes that the relative capacity scale of the batteries in the drive and charge packs is an absolute charge capacity scale with an invariant maximal charge retention, which it is not; in fact, the absolute charge capacity is itself a variable subject to several factors, such as the cycle life, overcharging or undercharged conditions, cell age, residual memory and the rate of charge and discharge. Hence, the inference of a uniform time scale on the basis of the open circuit voltage/capacity intercepts may not be warranted. Finally, it does not integrate the open voltage decrease over time, and utilises the specification load current as the average current over time.

In order to obviate these problems, we resorted to a variety of other measurement methods. First, we proceeded to compare the closed circuit, preliminary, resistive-load discharge measurements for either charge or drive pack, under conditions of negligible loss of power, as these measurements were statistical means (n = 9) taken, at equal intervals, during the first 90 seconds of the load discharge, and obtained both just before the PAGD production runs (but separated from each PAGD run by an open circuit voltage relaxation of 30 minutes) and just after the runs (but equally separated by a relaxation of 30 minutes). As an example of the data generated by such an approach, **Fig.14** illustrates the shift of the slopes indicating marginal power loss for the drive pack (from the closed squares to the open squares) and those indicating gain of power for the charge pack (from the open circles to the closed circles), in actual total load power values.

Integration of these power measurements over the projected load discharge time, taken from the family of curves generated on the basis of the manufacturer's load voltage over discharge time specifications, led to a direct comparison of the new values, as shown in Table 6, with the values presented in Table 5, for the first three instances introduced. All values of Table 6 were obtained by resistive measurements of power that entailed a negligible power loss. Table 6 confirms the fundamental equivalence of runs 1 through 3, as already seen from their corresponding analysis using the open voltage method (see runs 1 to 3, Table 5). This new power estimation method also confirms the lower loss encountered in run 2 utilising interrupted PAGD operation. While the break-even efficiencies sensibly doubled using this method, the estimates of actual electrical power consumption recovery decreased by a 2 to 3-fold factor. Thus this direct load voltage/amperage measurement method of estimating actual power losses or gains, is a check upon the open voltage method previously utilised.

Direct, instantaneous measurements of the voltage and current characteristics of the PAGD production and capture phenomena being discussed, were also performed during PAGD runs for diverse sets of conditions, including all those described in the two previous sections. In Table 7 we show these results for two PAGD generators having an identical electrode area (128 cm^2) and connected to electrical energy capture circuits of three separate configurations as set forth in **Fig.10A, Fig.10B** and **Fig.10C** and column 2, Table 7. In the configuration of **Fig.10C**, or double diode configuration, both electrode plates act as cathodes and the axial member as the anode collector (experiments 1-4, for the H220 device and 13-14, Table 7, for the H34 device). In the configuration of **Fig.10B**, or triode configuration, one plate acts as the cathode, the axial member as an auxiliary cathode and the other plate as a collector (experiments 5-9, Table 7). In the configuration of **Fig.10A** or single (plate to plate) diode configuration, the axial member is disconnected, and the polarity of the plates remain as in the triode configuration (experiments 10-12). All measurements were taken after 1 minute of PAGD operation of the devices, which were, at the start of each run, at room temperature. All cathodes had been previously broken in with > 2 x 10^6 AGD pulses. The open circuit voltage of the charge pack was, for all cases, at 359 to 365 volts, before each test. The direct measurements of the PAGD input and output DC voltages and currents were obtained as statistical means of 10 second long measurements, and at no time did the standard error of the plate voltage mean exceed 35 volts.

The air pressure within the tube during these tests is shown in column 3, Table 7, the drive pack DC voltage (X), in column 5, the DC voltage across the plates (Y), in column 6, the drive pack output current (PAGD input current), in column 7, and the drive pack total watts output is shown in column 8. Columns 9 and 10 show the PAGD voltage (PAGD V = $(X-Y) / I_{av}$) and the value of the PAGD extinction potential in V/cm. The recovery co-ordinates (i.e. the PAGD output energy) found at the **U1-U2** output (**Fig.9**), are shown in columns 11 to 13, as the charge pack's E1-E2 input DC voltage, amperage and power watts, respectively. The calculated resistance of the entire circuit is given in column 14, the registered PAGD frequencies in column 16, and running conditions in columns 17 to 18. The break-even efficiency obtained by direct comparison of the electrical power figures for the drive and charge packs, respectively, is given in column 15. This assumes, for purposes of a generalisation of power production rates over time, that the quasi-instantaneous, direct measurements here obtained can be translated to outputs obtained per unit time, and thus into direct Watt-hour measurements.

Data from runs 1 through 4 demonstrate that, at these PAGD frequencies, there is no difference between using fast switching (32 nanoseconds) MUR 860 diodes, or regular 40HFR-120 silicon diodes, in the rectification bridge of the electrical energy capture circuit, and that the PAGD frequency varies as a function of decreasing air pressure.

Runs 5 to 14 show that, in general, for the same tube, the single and double diode configurations are the most efficient, for the same pressure, the diode configuration typically yields some 1.5 to 2 times larger break-even efficiencies (cp runs 10-11 and 13-14, with runs 5-9, Table 7). The largest accumulations of power are also registered in the diode mode(s). This trend appears to be a function of the much lower cathodic work-function of the aluminium plates, than of the tungsten of the axial member utilised as an auxiliary cathode in the triode configuration. A feature of the data from these 14 different runs is the consistent excess power outputs (column 15, Table 7) and their narrower range (218 to 563%), when compared to those observed with the previous two methods of experimental analysis.

Run 12, Table 7, shows that the switching on of the electromechanical arm can be performed without entailing a power loss in the PAGD capture circuit, as previously found for run 5, Table 5, utilising the open circuit voltage method. In fact, with **C4** = 8 microfarads and R4 = 500 ohms, the AC induction motor behaves as an electrical flywheel (e.g. 2800-3000 rpm for 10 PPS inputs), while the electrical energy capture circuit still registers a sizeable excess electrical power production (compare runs 11 and 12, Table 7). Runs 13 and 14 illustrate how the charge pack's state of charge and its inherent capacitance affects both the PAGD frequency and the power producing efficiency of the entire system: as the charge pack is reduced from 29 to 19 cells, the PAGD generator adjusts by reducing its frequency logarithmically and, while the charge pack input current is greater than before, the drive pack loss becomes still larger and the break-even efficiency much lower (by >1/2, from 563% to 228%). This is because the circuit must translate the naturally larger PAGD amplitude into a larger surplus of output current, and in this process becomes less efficient.

If the first measurement method employed (the open circuit method) had to make too many theoretical assumptions about the system's performance under load conditions and hence about its effective charge capacity, the second approach still had to suppose an invariant discharge time and thus an invariant absolute charge capacity on the part of the battery systems (charge packs) employed for capture which it approximated by an operation of integral calculus. With the third method described above, theoretical assumptions were avoided except that, in these measurements, the actual performance of a given battery in terms of time, time of delivery and time of capture, was also ignored; no account is taken of the time-dependent modulation of the PAGD frequency, as effected by certain of the parameters analysed, namely the charge pack state of charge, the method of sequencing the PAGD runs (continuous vs interrupted) and its concomitant heating effects, and the state of charge (load voltage and current capacity) of the drive pack. A simple, non-negligible, resistive measurement of power lost by the drive pack, and an identically non-negligible measurement of the power gained by the charge pack, for the same experiment and the same singular time of PAGD production, were performed repeatedly to corroborate the previous three approaches. For this purpose, all experiments were designed as a continuous series of sequential phases:

1) Before a PAGD run, a resistive discharge was measured across either pack over periods of 1 to 3 hours (utilising the DP and CP resistances previously reported in the open voltage section) and followed by a 15 to 30 minute open circuit voltage relaxation;

2) Then, the PAGD runs were performed, either continuously or as interrupted, composite sequences, and the corresponding open circuit relaxation voltage(s) were measured, after the cessation of the integral PAGD run;

3) Finally, resistive discharge measurements, obtained under identical conditions to those recorded before the PAGD run, were carried out for either pack, followed by concomitant battery voltage relaxation rate measurements.

Under these experimental conditions, exact power measurements could be taken from an analysis of the actual battery discharge curves before and after the PAGD run. Based on a comparison of the curve trends of the pre-run resistive discharge of the drive pack with those of the post-run resistive discharge, the effective power drawn (DeltaE_c) from the withdrawable power capacity of the drive pack incurred during a PAGD run, was ascertained. This represents the power consumption during the run, and the experimental value thus recorded constitutes the actual power figure that must be matched for break-even to occur. Hence, the break-even value equals, by definition, the electrical energy input to the system. Similarly, a comparison of the charge pack pre-run and post-run resistive discharge curve trends identified the effective power (DeltaE_{rho}) added to the withdrawable capacity of the charge pack. This quantity represents the electrical energy recovered during the run. The relation for the two quantities is expressed by the break-even efficiency equation:

$$\% = \mathrm{DeltaE}_{rho} / \mathrm{DeltaE}_c \times 100$$

If the break-even efficiency is less than 100%, then the apparatus registers a net loss in electrical energy in the CP with respect to the DP. Conversely, if the efficiency exceeds 100%, then there is a net gain in electrical energy in the CP, as compared to that lost in the DP. For purposes of this analysis, a limit to the minimum withdrawable capacity was placed, from experiment and in agreement with the load current curves of the manufacturer, at 115 W for the driver pack (average current of 0.250 A, minimum current of 0.230 A), and at 90 W for the charge pack (average current of 0.375 A, minimum current of 0.334 A), as a function of both their total cell size (respectively, 46:29) and the difference in the resistive loads employed for the discharge measurements. All cathodes had been broken in, as described before.

The results obtained with this fourth method, for six selected experiments with three diverse types of devices (using different electrode plate areas, gap lengths, and electrode work-functions), configured both in the triode or the (single) diode (e.g. **Fig.10B**) arrangements, at the indicated pressures, are presented in Table 8. In all cases, a net excess of combined battery pack charge, expressed as electrical watt hours, is registered (columns 8 and 10, Table 8) and the break-even efficiencies are all >100% (column 10). Experimental groups 1 and 2 again demonstrate that, for the same cathode, the interrupted PAGD sequence method of group 2 (1 minute of PAGD function, followed by a 15 minute relaxation, and so on) yields a higher break-even efficiency because of the lower losses registered with this minimal plate heating method (column 10, Table 8). Group 3 of Table 8, shows that the PAGD power production efficiency is also higher for a lower work-function cathode material (H220 vs H34), being subjected to PAGD auto-electronic conditions at a 4-fold lower pressure than the control groups 1 and 2; however, the lower pressure depresses the frequency and, together with the interrupted PAGD sequencing method, it also lowers the loss, causing an actually much larger break-even value than registered for the previous two groups. Groups 4 and 5 exemplify the dual effect of lowering both the plate area and the gap distance: the former affects the PAGD event frequency, whereas the latter affects the PAGD amplitude, and thus the capture efficiency of the charge pack. Despite a cathodic work-function practically and operationally identical to that of groups 1 and 2, these smaller plate area and shorter gap devices utilised in groups 4 and 5, yield 3- to 6-fold lower net power outputs, as well as lower break-even efficiencies, than the former groups, at the same pressure. Finally, group 6 exemplifies the results obtained for the plate diode configuration, where the frequency is lower (no triggering role for the axial member), and a higher loss leads to the lower break-even efficiency, comparable to that of the lower area and shorter gap groups 4 and 5.

In order to verify the discharge curve lengths employed in these analyses and experimentally establish the actual charge capacity of the battery packs, calibration resistive discharges, between the maximum charge state and the minimum limits chosen, were performed for each pack with their respective discharge resistances R2 and R3 (see **Fig.9**). These discharge calibration curves were plotted for half maximal charge values shown in **Fig.15A** and **Fig.15B**, and from the curve produced, we have determined the total half-charge capacities of each battery pack to be 1.033 kWh (100%=2.066 kWh) for the drive pack and 660 WHr (100%=1.320 kWh) for the charge pack. Based upon the corresponding maximal (100%) capacity values, we determined the actual percentages of the relative charge capacities shown in column 5, Table 8, which correspond to the experimental values obtained. We also noted that the curves plotted showed two quite distinct time linear slopes, the slope of the delivery of power per time unit steepening very markedly at the approach to the limits of the permissible withdrawable capacity, occurring at 115 W into **R2**, and 90 W into **R3**.

The pre-PAGD run and post-PAGD run, drive and charge pack discharge curves corresponding to groups 3 and 6, respectively for triode and plate diode configurations, in Table 8, are shown in **Fig.16** (drive pack) and 17 (charge pack), for group 3, and in **Fig.18** (drive pack) and **Fig.19** (charge pack), for group 6. In all cases, the open symbols represent the pre-PAGD run discharge curves, whereas the closed symbols represent the post-PAGD run discharge curves.

As a further check on these values, a videographic, millisecond analysis of the singular power simultaneities occurring at both ends of the system (drive and charge packs) was performed for various 10 second samples of diverse PAGD runs. A typical example is shown in **Fig.20**, which is a sample of the PAGD run designated as 6 in Table 8. While the drive pack DC wattage spent as input to PAGD production varied from 36.6 to 57.82 watts, by a factor of 1.6 times, the DC wattage entering the charge pack as captured PAGD output varied more pronouncedly by a factor of 2.7 times, from 146.4 to 399.6 watts (all meters were in the same selected ranges of voltage and current) with the semi-periodic, intermittent character of each singular emission, though within specific, ascertainable ranges for both amplitude and current outputs.

Assimilation of the singular behaviour of the PAGD in this sample, by a statistical treatment of its variation (with n = 64), indicates that the operational break-even efficiency observed during this sampled period lies at 485.2% +/- 18% with projected 48.3Wh drive pack loss and 221.7Wh charge pack gain. This matches rather closely the observed 483% break-even efficiency, and the 37.7Wh loss as well as the 182.2 kWh gain for the overall PAGD run reported in group 6 of Table 8, and indicates how close are the values obtained by the operational and extensive non-negligible resistive discharge power measurement methods employed.

Finally, an example of the correlation between the drive pack PAGD load voltage and the charge pack PAGD charging voltage, as a function of the duration of the intervening PAGD run between resistive discharge measurements, is shown in **Fig.21**, for the PAGD run corresponding to group 4 of Table 8.

Using the same pulse generator with H200 Al 128 cm^2 plates, in a double diode configuration, and the same circuit values (but with CP = 23 cells), three experiments were conducted at different PAGD frequencies, as a function of varying air pressure. Analysis of driver pack losses and charge pack gains by the extensive load discharge measurement method, as described before, led to the determination of the gross and net gains (respectively, without and with losses included) per pulse, in milliwatt-hour, for each frequency, as well as of the gross and net power gains per second of PAGD operation. The results are shown in Table 9. Even though the gross and net gains of power per pulse were observed to increase with decreasing frequency, the gross power gain per unit time increased with increasing frequency. However, this last trend does not necessarily translate into a higher net gain per unit time, because the losses in the driver pack (not shown) also increase significantly with PAGD frequency. These losses are in all probability related to more energy retention by the plasma at higher frequencies when plasma extinction becomes incomplete. We expect net gains to reach optimal thresholds for any given type of circuit configuration set of values and pulse generator dimensions.

Certain additional observations made during experiments with the double diode configuration of **Fig.10A** may assist in understanding of the invention.

1) Replacing residual air with argon gas leads to higher PAGD frequencies, as noted by us when utilising a 128 cm^2 H200 AC plate pulse generator in the double diode configuration (V = 575). At 1 Torr, the pulsation rate went from 20 PPS in air to 1300-1400 PPS in argon. With 29 12V cells in the charge pack, input currents ceased to flow into it. Under these conditions, the tube potential across the plates decreased and the drop across the input resistor increased. The value of E (= V/d) became smaller (gap size = 3 cm from plate to axial anode collector), as the extinction voltage decreased.

2) With frequencies of 400 PPS, the currents flowing into the charge pack fell to zero. Replacing a fast-recovery type HFR 120 (1200v, 40A) diode bridge by a type MUR 860 (600v, 8A) diode bridge had no effect. When the amplitude of plate potential oscillations falls below the potential of the charge pack, there is also a tendency to produce arc discharges. For output currents from the vacuum pulse generator to enter the charge pack, the number of cells must be reduced so that the potential of the charge pack is low enough to admit the transduced currents. A reduction from 29 to 23 cells allowed currents of 250 mA to enter the CP, and further reduction to 19 cells doubled these currents (per polarity arm).

3) Our observations show that it suffices under these conditions (CP of 19 cells) to increase the vacuum, so that the frequency decreases, and the plate potential and the charge pack input currents increase. At 0.1 Torr, the currents reached 1A DC per plate, and at 0.05 Torr, 2A DC

The interconnection between these factors indicates that the extinction voltage is a function of the PAGD frequency: the higher the PAGD frequency, the lower the extinction voltage, until empirical (in distinction from predicted) VAD field values are reached. As a consequence, the start voltage of the charge pack must be adjusted, by varying the number of cells composing it, so that it lies below the lowest extinction voltage of the PAGD, for any given geometry and gap distance.

Secondly, as the ion plasma is made more rarefied, the frequency of the emissions decreases, but the peak values of the output voltage and current per pulse increase. The slower the PAGD and the more rarefied the atmosphere, the higher is the output energy produced by the system relative to the input energy.

Autographic analysis of PAGD-induced cathode craters in H34 plates was performed, and their average inner diameter and maximum depth were determined. Similar studies were performed for PAGD-induced craters in Alzak (trade mark) plates. The secondary craters characteristically found in Alzak plates, along fracture lines irradiating from the main crater, are absent in H34 plates; instead, in H34 plates, one observes a roughened surface surrounding the emission crater, quite distinct from the original rough aspect of the pulled finish of these hardened aluminium plates. Also, unlike the Alzak main craters, the H34 craters often have a convex centre occupied by a cooled molten metal droplet, whereas the Alzak craters had a concave, hollowed out aspect. Eventually, as the pitting resulting from PAGD cathodic emissions covers the entire cathode, the metallic surface gains a very different rough aspect from its original appearance. In this process, craters from earlier metal layers become progressively covered and eroded by subsequent emissions from the same cathode. Altogether different is the surface deposition process occurring at the anode; here, the surface appears to become more uniform, through the mirroring and possibly abrasive actions of cathode jets. Macroscopically, with increased periods of PAGD operation, the anode surface appears cleaner and more polished.

With the data obtained by the metallographic method of crater measurement, we estimated the volume of metal ejected from the cathode, by assuming that the crater represents a concavity analogous to a spherical segment having a single base (1/6pi x H [$3r^2 + H^2$], where **H** is the height of the spherical segment and **r** the radius of the sphere), while disregarding the volume of the central droplet leftover from the emission. The following are mean +/- SEM crater diameters (D), crater depths (H) and maximum volumes (V) of extruded metallic material for two types of aluminium cathodes, Alzak and H34 hardened aluminium, subject to a high input current PAGD:

1. Alzak: D -0.028 cm +/- 0.003; H -0.002 cm +/- 0.0002; V - 6.2×10^{-7} cm^3

2. H34: D -0.0115 cm +/- 0.0004; H -0.0006 +/- 0.0001; V - 3.1×10^{-8} cm^3

Accordingly, utilising plates composed of either material with 3 mm of thickness, and thus with a volume of 38.4 cm^3 per plate and considering that only 2/3rds of the cathode shall be used (a 2 mm layer out of the 3 mm thickness), the total number of pulses per plate total (TLT) and partial (PLT) lifetimes is theoretically:

1. Alzak: TLT: 6.2×10^7 pulses; PLT: 4.1×10^7 pulses;

2. H34: TLT: 1.2×10^9 pulses; PLT: 8.1×10^8 pulses.

Typically, an H34 device can produce about 0.25 kWh per 10,000 pulses. The corresponding value for a PLT is thus a minimum of 1.0 MWh/Alzak cathode and of 20 MWh/H34 cathode. As the cathode for each combination is only 66.7% consumed, the vacuum pulse generator may continue to be used in a reverse configuration, by utilising the other plate in turn as the cathode; thus, the estimated minimal values become, respectively, 2.0 MWh/Alzak pulse generator and 40 MWh/H34 pulse generator. The same rationale applies for the double diode configuration of **Fig.10C**.

We have created a two-ported system for the production of the singular discharge events which we have previously identified in the “863” application as an endogenous pulsatory abnormal glow discharge regime where the plasma discharge is triggered by spontaneous electronic emissions from the cathode. We have examined the functioning of this two-ported system in order to determine what were the electrical power input and output characteristics of a sustained PAGD regime. Despite the wide (10-fold) variations in net power and break-even efficiencies measured by the four different methods employed (open voltage measurements, time integration of negligible power measurements, operational power measurements and real time non-negligible power measurements), all methods indicate the presence of an anomalous electrical transduction phenomenon within the vacuum pulse generator, such as can result in the production at the output port of electrical energy measured and directly captured which is greater than would be anticipated having regard to the electrical energy input at the input port. With the most accurate of the methods employed, we have found typical PAGD power production rates of 200 WHr/hour of PAGD operation, and these may reach >0.5 kWh/h values.

The discrepancies between the methods utilised have been extensively examined in the preceding section. Our systematic approach demonstrates that the most frequently employed method of measuring the charge capacity of batteries by the open voltage values is the least reliable approach for the determination of the actual net power lost or gained by the battery packs used in the system: when compared to all three other methods, it overestimates net power consumed and produced by up to 10 fold, as well as distorting the break-even efficiencies, particularly at the extremes of operation. All this results from the grossly diminished (50-60% of manufacturer's theoretical estimate) effective charge capacity of the lead acid gel cells employed, as determined experimentally from **Fig.18** and **Fig.19**, when compared to the theoretical maximal charge capacity values that serve as scale for the open voltage measurements. In other words, the effective energy density of the batteries during these experiments was in fact approximately half of the manufacturer's estimated 30 WHr/kg.

Under these actual conditions of battery performance, the third and fourth methods (respectively, operational and real-time non-negligible power measurements) of power consumption and production proved to be the best approach to measure both PAGD electrical power input and output, as the results of both methods matched each other closely, even though the former is a statistical treatment of simultaneous events and the latter is a real time integration of their cumulative effects. The second method is clearly less reliable than either the third or the fourth methods, and this stems from the fact that the power consumption slopes of negligible resistive discharges not only are very different from the quasi-steady state discharge slopes (beginning at >5 - 15 minutes) of extensive resistive discharges, but also their proportionality may not reflect the real time proportionality of equivalent prolonged resistive discharges.

The main advantage of the fourth method is that it effectively takes into account the actual time performance of the batteries comprised by the overall PAGD production and capture system we have described. As such, the method may have the main disadvantage of reflecting more the limitations of the batteries employed (their high rate of degradation of the absolute value of total effective charge capacity, and limited efficiency in retaining charge derived from discontinuous input pulses) than indicating the actual power output. There are a number of possibilities for fine tuning of the system introduced by the present work, beginning with the utilisation of secondary batteries or other charge shortage or absorption devices that have less variable or more easily predictable actual charge capacity.

In this respect, there are two major shortcomings to the batteries used to form the drive and charge packs; (1) their significant memory effect and (
2) their design for constant, rather than discontinuous, DC charging.

Recently developed Nickel Hydride batteries are an example of an electrostatic charge-storage system that lacks a substantial charge memory effect, and their experimental batteries are being developed currently for higher efficiency intermittent charging methods. Electrostatic charge retention systems having better energy densities, better charge retentivities and insignificant memory effects will probably be more efficient at capturing and holding the energy output by the circuit. In practical embodiments of the invention, effectiveness in charge utilisation will be more important than measurability, and any device that will use the energy effectively whilst presenting an appropriate back EMF to the system may be utilised.

The effect of the performance characteristics of the drive and charge packs is only one amongst many parameters affecting operation of the invention. As shown by our extensive investigation of the diverse PAGD phenomenon the recovery of energy from it by electromechanical transduction as in the “531” application, or electrostatic capture as described above, the factors involved in modulating the frequency, amplitude and peak current characteristics of the PAGD regime are complex. Manipulation of these factors can improve electrical energy recovery, or reduce it or even suppress PAGD. We have so far noted numerous factors that affect PAGD frequency and some amongst those that also affect the PAGD amplitude. Aside from these factors, the circuit parameters of the output port portion of the circuit, in addition to the nature and chemical characteristics of the battery cells already discussed, the charge potential of the charge pack, the characteristics of the rectifiers in the recovery bridge in relation to the period of PAGD super-resonant frequencies, and the effective values of the parallel and transversal capacitance bridges can all influence the results achieved. Certain factors however have a radical effect on PAGD operation, such as the gap distance and the charge pack potential.

Too small a gap distance between the cold emitter (cathode) and the collector will result in an increasing reduction in energy recovery. The potential presented by the charge pack must be less than the voltage amplitude developed by the PAGD, as specified by a given gap distance at a given pressure. Too large a charge pack size with respect to PAGD amplitude and the gap length will preclude PAGD production or result in extremely low PAGD frequencies. In brief, the energy absorption rate and the counter potential presented by the charge pack or other energy utilisation device are important factors in the operation of the circuit as a whole, and should either be maintained reasonably constant, or changes should be compensated by changes in other operating parameters (as is typical of most power supply circuits).

Since our test results indicate that the electrical power output of the circuit can be greater than the electrical power input to the circuit, the circuit clearly draws on a further source of energy input. Whilst we do not wish to be confined to any particular theory of operation, the following discussion may be helpful in explaining our observations. These observations have been discussed in some detail so that the phenomenon observed can be reproduced, even if the principles involved are not fully understood.

In the “863” and “531” applications we have identified a novel, cold-cathode regime of vacuum electrical discharge, which we have termed the pulsed abnormal glow discharge (PAGD) regime. This regime, which occupies the abnormal glow discharge region of the volt-ampere curve of suitable discharge tubes, has the singular property of spontaneously pulsing the abnormal glow discharge in a fashion which is coming from the tube and its circuit environment that constitutes a vacuum pulse generator device, when it is operated under the conditions which we have identified. In fact, when stimulated with continuous direct current, in such conditions, such a circuit responds with spontaneous abnormal glow discharge pulses that enable effective segregation of input and output currents.

We have demonstrated electrically, metallographically, oscillographically and videographically, how the pulsed discontinuity results from a self-limiting, auto-electronic cathode emission that results in repeated plasma eruptions from the cathode under conditions of cathode saturated current input. The auto-electronic triggering of the PAGD regime is thus akin to that of the high-field emission mechanism thought to be responsible for vacuum arc discharges (VAD regime). However, under the PAGD conditions we have defined, this mechanism is found to operate in the pre-VAD region at very low field and low input average direct current values, with very large inter-electrode distances and in a self-limiting, repetitive fashion. In other words, the PAGD regime we have identified has mixed characteristics: its current versus potential (abnormal glow) discharge curve is not only distinct from that of a vacuum arc discharge, but the electrical cycle of the PAGD regime itself oscillates back and forth within the potential and current limits of the abnormal glow discharge region, as a function of the alternate plasma generation and collapse introduced by the discontinuous sequencing of the auto-electronic emission process. Accordingly, the intermittent presence of the abnormal glow, as well as the observed segregation of the current flows, are due to the diachronic operation of these spontaneous cathode emission foci. The micro-crater and videographic analyses of the PAGD have demonstrated the presence of an emission jet at the origin of each pulse, a phenomenon which VAD theory and experiment has also identified. Metallic jets originating at the cathode spots of VADs have been known to present velocities up to, and greater than 1000 m/sec.

In light of the above, the energy graft phenomenon we have isolated would have to be operated, at the micro-event scale, by the interactions of the cathode emission jet with the vortex-formed impulse-transducing plasma in the inter-electrode space. Several aspects can be approached in terms of the complex series of events that constitute a complete cycle of operation, on a micro-scale. There are interactions within the cathode, interactions at the cathode surface, interactions between the emission jet and the plasma globule close to the cathode, and finally, interactions of the resulting electron and ion distributions in the inter-electrode plasma, within parallel boundaries.

In general, in the presence of an electrical field, the distribution of potential near the cathode forms a potential barrier to the flow of electronic charge, as this barrier is defined by the energy that the most energetic electrons within the metal (the Fermi energy electrons) must acquire before freeing themselves from the cathode surface potential, to originate an emission jet. Before any free electrons become available for conduction in the space adjoining the cathode, they must cross the boundary posed by the potential barrier. With a weak applied field, classical electron emission from a metal can only occur if an energy practically equal to the work-function of the metal is imparted in addition to the Fermi energy. Under thermionic conditions of emission, the heating of the cathode provides the needed energy input. However, the cold-cathode Fowler-Nordheim quantum-field emission theory predicted the existence of a finite probability for an electron to tunnel through the potential barrier, when the applied field is high. Cold-cathode electron emissions are thus possible, under these conditions, at practically Fermi energy levels, as the high field would catalyse the tunnelling through the potential barrier by narrowing the barrier width for the Fermi energy electrons. The exact localisation of the emission would then depend on the randomised fluctuations of high fields at the cathode, which were produced by positive space charges sweeping in proximity to it.

For most purposes, this theory has been the working hypothesis of the last 60 years of field emission studies, which have centred upon the VAD mechanism, despite the fact that observed field gradients are evidently inadequate to explain breakdown as a function of the theoretical high field mechanism. The Fowler-Nordheim theory has therefore suffered major revisions and additions, mostly to account for the fact that it postulates, as a condition for cold-cathode field emission in large area electrodes, the presence of enormous fields (>10^9 V/m) and extremely low work functions, neither of which are borne out by experimental VAD investigations. Some researchers have found that the breakdown responsible for the VAD field emission is promoted by Joule heating and vaporisation of microscopic emitter tips, and that this requires a critical current density (10^{12} A/cm^2), while others emphasised that this explanation and these thresholds did not hold for large area emitters and that a space charge effect of concentrating the ion distribution near the cathode promoted breakdown under these circumstances, when the field reached a critical value; large field enhancement factors (more than a thousand-fold) have been postulated to explain the discrepancy between theoretical predictions and experimental findings regarding the critical breakdown field values, and others have demonstrated how this critical field value effectively varies with work-function and electrode conditioning.

The PAGD regime and its self-extinguishing auto-electronic emission mechanism stands as an exception to the high field emission theory as it currently stands with all its modifications, especially given that in this phenomenon we are confronted with a cathode emission that spontaneously occurs across the large gaps in large plate area pulse generators, at very low field values (down to <1 x 10^4 V/m), as shown above and in the “863” application. Moreover, a Fowler-Nordheim plot (in the form Log_{10} (I/V^2) versus 1/V) of the PAGD volt-ampere characteristic exhibits a positive slope, rather than the Fowler-Nordheim negative slope characteristic of VAD field emission. However, current density values obtained from correlations of autographic analysis of the cathode with an analysis of event-oscillogram (peak pulse currents), indicate that the PAGD current density J may reach values of 10^5 to 10^7 A/m^2 during the emission process (the larger Alzak craters have an associated lower J value), values which, at the upper end, do not reach the 10^9 A/m^2 current density threshold required by the Fowler-Nordheim theory. Considering these two distinct observations with regards to field strength and current density, we have to admit the existence of a low field, large area cold-cathode auto-electronic emission endowed with high current densities, which is not predicted by current field emission theory.

Unlike the typical VAD regime, the PAGD is neither a high frequency oscillation, nor does it occur in a random fashion. It constitutes a semi-regular, quasi-coherent, periodic energy transduction which cycles between cathode drop limits that are higher by a factor of 2 to 15 than typical vacuum arc cathode drops. The intermittent cathode emission responsible for the low frequency, pulsed behaviour of the abnormal glow, is also self extinguishing and self-starting, under the conditions we have defined. Furthermore, we have also identified a novel and unexpected dependency of the periodic pulse rate upon the cathode area. This indicates the presence of field emission control parameters heretofore unsuspected. It is likely that field fluctuations of the polarised pre-breakdown field is responsible for eliciting the particular localisations of the auto-electronic emission foci, as well as what imparts, in a lens-like fashion, the distorted field energy needed for electron surface release. In this sense, external, electrical or magnetic field fluctuations (e.g. motion of static charges or of constant magnetic fields) induced by us at pre-breakdown potentials, provoked PAGD emissions and breakdown at these levels.

In general, VAD studies have shown that, for large area electrodes, microgeometry, adsorbed gas layers and gas impurity contents of the cathode play a role in modulating field emission. In our PAGD studies, the interactions at the cathode surface and across the cathode potential drop are clearly modulated by:
(1) the nature of residual gases, as shown by our air vs Argon studies;
(2) their pressure,
(3) electrode conditioning,
(4) work-function and
(5) cumulative pulse count, amongst others.

The plasma, in leak-controlled or low pressure PAGD devices, has both residual gas and metallic vapour substrates. In devices initially closed at high to very high vacua (diffusion pump pressures), the major residual substrate, whose presence increases with time of operation, is the metallic vapour released from the cathode and not impacted on to the envelope walls or the anode. It has been previously shown for externally (magnetically or electrostatically) pulsed plasma accelerators, that the amount of residual gas or vapour left in the inter-electrode space diminishes with increasing number of consecutive discharges and a growing amount of electrode-insulator absorption of gas. The effect of such removal of residual gas or vapour is to decrease the vacuum of a sealed envelope. With high vacuum sealed PAGD generators we have observed that prolonged operation and sputter-induced mirroring of the envelope causes a progressive disappearance of the discharge, as the voltage potential needed to trigger it also increases. At the thermocouple, low frequency pulsed abnormal glow discharges can also be seen to increase the vacuum significantly. These results suggest instead the presence of a pumping mechanism in the PAGD which is somewhat analogous to that of sputter ion pumps, where collision of ionised gas molecules with the cathode is responsible for the sputtering of cathode material that either combines with the gas substrate (`gettering` action) or `plasters over` the inert gas molecules on to the anode (a process known as `ion burial`). These are the two basic pressure reducing actions of sputtered getter atoms, in ion pumps.

However, in ion sputter pumps, the initiation of the cycle is a function of the presence of high velocity electrons in the high field plasma of the glow discharge, which are necessary to ionise the gas substrate molecules; also, the getter material typically has a high work-function for field emission. Hence, the sputtering is due to the secondary impact of plasma positive ions at the cathode, after plasma ionisation has occurred in the inter-electrode space. Altogether different is the mechanism of spontaneous, primary electron emission from the cathode, which is characteristic of the low field PAGD: here, the sputtering is caused by the electronic emission itself and attendant metallic vaporisation processes. By artificially confining the firing foci to a part of the cathode, we have shown in the single diode configuration how the PAGD induced sputtering is associated with the cathode auto-electronic emission mechanism, rather than with the abnormal cathode glow per se, given the localisation of sputtering on to the emission region of the plate, despite its overall cathode glow saturation.

These observations would thus seem to corroborate the hypothesis of a progressive vacuum increase with the cumulative number of emitted pulses, were it not for the fact that experiments performed with leak controlled devices (reported here and in previous studies) show that, when the negative pressure is maintained by balanced leak admission of air or argon, pulse rates still decrease with cumulative pulse count, and do so neither as a function of an increase in vacuum, nor as a function of envelope mirroring (unless this is so extensive as to establish envelope conduction), but rather as a function of processes (generally referred to as conditioning) inherent to the electrodes, specifically, to the cathode. We have further shown that, for such altered emitter states, the pressure of the vessel must be increased, not because of an increasing vacuum (precluded by the controlled gas leak), but because of the effect that residual gases may have in modulating the low field PAGD emission.

PAGD electrode conditioning is a cathode-dominant process resulting from the cumulative emission of high numbers of pulses by a cathode, and has been shown to be a factor independent of the nature and pressure of the residual gas and partially reversible only by operation with reversed plate polarity, unlike reports of copper cathode-dominant conditioning. It is thought that electrode conditioning and the accompanying increase in VAD breakdown potential are due to the progressive adsorption of residual gases, though cathode-dominant conditioning processes, such as subjecting the vacuum gap to consecutive discharges, have been shown to correlate the decrease in plasma impulse strength with electrode outgassing of absorbed or adsorbed gases. Moreover, given the pitting action of crater formation at the cathode by the PAGD regime, and, as we shall see below, the metallic plating of the anode, the PAGD cathode-dominant process of conditioning we have observed with respect to decreased pulse frequency and increase in potential, suggests that the apparent increase in cathode work function is not due to gas adsorption or absorption. These processes are more likely to occur on the plated anode. It is likely that, given the observed PAGD pressure reducing effect caused by the cathodic jet, a certain outgassing of the cathode is in fact occurring during PAGD function.

One might also expect that the anode, if plated by sputtering atoms, would increase its gas content in the formed surface film. However, controlled leak experiments suggest instead that some other type of alteration of the cathode work function is occurring, which is, as we shall examine below, independent of the adsorbed gas state of the electrodes, as well as independent of the PAGD ion pump-like effect. Nonetheless, even at the level of the anode, the PAGD sputtering action may have contradictory effects: it may impact inter-electrode gap molecules on to the collector, as well as release, by ionic bombardment and vaporisation, gases adsorbed to, or contaminating the anode. If we assume that gas adsorption by impact on the collector is the predominant mechanism, one could explain the increase in the number of breakdown sites per unit time, as observed by us for a re-reversed cathode, if the number of PAGD breakdown sites depended on the quantity of adsorbed gases, e.g. oxygen, on the cathode being tested. Recovery of the cathode work-function would depend on the electronic charge recovery of the positively charged, adsorbed or occluded gas layer at the cathode- either by reversal or as a function of time of inactivity.

The surface film theory of “electrical double layer formation at the cathode” in fact contended that, low field flash over is a photocathodic effect dependent upon the presence of a glowingly positively polarised gaseous film at the cathode; this film would lower the cathode emissivity by decreasing the field between the cathode surface and the leading edge of the cathode glow, across the cathode drop. However, even though the surface film theory of “electrical double layer formation at the cathode” predicts the lowering of the emission breakdown potential and the increase in flash over rate when the electrodes are reversed - as the anode would have acquired a surface charge capable of affecting the breakdown potential, it acknowledges nevertheless, that the anodic surface charge hardly explains the observed intensity of the polarisation effects.

Moreover, non-reversed, conditioned cathodes retained their lower PAGD frequencies in a time-independent manner, for as long as reversal was avoided (excluding a PAGD frequency recovery effect due to plate cooling, which may be as short as 15 minutes). PAGD conditioning was independent of idle time and increased with cumulative pulse count. Moreover, the AGD pulses are not UV photocathodic Townsend discharges, liberating secondary electrons via positive ion impact at the cathode. Nor could photocathodic emissions generate currents of the magnitude observed in the PAGD. Lastly, the PAGD discharge and breakdown thresholds appear to be unaffected by UV, though they may be somewhat depressed by visible light, and the emission mechanism in the PAGD is the primary process.

Removal or flattening of protuberances and tips from the emitting cathode by the action of the discharge, is a process also thought to play a role in hardening the cathode or increasing its field emission work-function. However, this explanation may not be adequate for the PAGD emission process, if we consider our metallographic findings of a smoothing action of the discharge at the collector. In fact, it would appear that the flattened, smoother, plated, mirrored and cleaner surfaces subjected to PAGD bombardment are the explanation for the observed increased emission ability of re-reversed cathodes: mirrored Alzak surfaces emit at higher frequencies than do dull H34 and H220 surfaces; new, polished surfaces emit at a higher frequency than do pitted, broken-in surfaces; anode surfaces, never before utilised as cathodes but subjected to prolonged PAGD action, emit at higher frequencies when employed as cathodes, than do new, identical cathode surfaces; and ex-cathodes, employed for prolonged periods as anodes, regain a higher emission frequency upon re-use as cathodes. The better PAGD emission performance of smoother cathodes, compared with the worse VAD emission performance of the same, when pitted cathodes (lacking protuberances) are used, requires explanation.

Rakhovsky has put forth a VAD model for cathode spots, that distinguishes between Type I spots (quickly moving spots, far from steady state and responsible for crater formation), and Type II spots (quasi-stationary and near steady-state, but leaving an itinerant track with no sign of crater formation). Whereas the former would obey the Fowler-Nordheim requirement for high fields (>10^9 V/m), the latter could hardly be expected to do so with typical arc voltage drops in the order of 10 V. Once again, autographic analysis of the PAGD emission aspect indicates mixed characteristics: the PAGD cathode spot is a hybrid. It behaves as an intermittent instability that leaves single (e.g. in H34) or clustered (e.g. in Alzak) craters, which are both qualities of Type I cathode spots; and it exists under low field conditions (<10^5 V/m), with cathode drops of 20 to 150 V, in a quasi-coherent mode, leaving an itinerant track of successive craters when operating at the higher frequencies, all of which are properties approaching those of a VAD Type II cathode spot.

Furthermore, the macroscopically visible metal sputtering (due to the explosive action of the PAGD emission phenomenon) occurring at the upper end of the permissible DC current input scale, and the presence of large solidified molten metal droplets in and around the craters, suggest models which have been proposed for explosive electronic emission. Explosion models propose that the creation of a residual plasma ball in front of a microprotuberance provokes the large potential drop at the prospective emission focus and sufficiently high resistive and Nottingham heating to reach >10^7 A/cm^2 current densities during the explosive consumption of these microemitters. Whether the explosive action associated with cathode spots is an auxiliary effect that applies solely to the vaporisation of the emitting microprotrusion, or an integral emission and vaporisation explosive process, it does not appear that it can be restricted to high-field VAD Type II cathode spots, given that it can be equally made to occur with the low field PAGD hybrid cathode spot, and be macroscopically observed. Indeed, in the plate diode configuration, it is easy to visualise the metallic particle explosions that surround and accompany the plasma jets, near to upper current limit conditions. However, if we are to assume that any of these models apply to the emission mechanism, we would, in all likelihood, have to conclude that the PAGD initial emission sites must be sub-microscopic (100 to 10 nm), rather than microscopic.

Resolution limits to our own metallographic examination of the smoothing action of the PAGD discharge on the collector would thus have precluded us from detecting formation of such sub-microscopic protrusions, as well as their presence in a “soft” cathode and thus infer their disappearance from a pitted, hardened cathode; but if the disappearance of such sub-microprotuberances were responsible for the observed alteration of cathode work function, one would also thereby have to postulate the existence of a mechanism for microroughness regeneration (e.g.. tip growth) at the anode, in order to explain the observed increased emission upon cathode re-reversal. Furthermore, this regeneration would have to be actively promoted by operation with reversed polarity, and this is problematic. Focusing of the distorted or magnified field upon alumina inclusions on pure iron electrodes has been demonstrated to degrade breakdown voltage for field emission, but the effect was greater for larger microscopic particles. If we were to apply this concept to our work, it would require the existence of unmistakably abundant microscopic heterogeneities in the quasi-homogeneous electrode surfaces employed, which we did not observe; on the contrary, their absence suggests that either the microroughness responsible for the low field PAGD emission is sub-microscopic, or that the field distortion responsible for eliciting the PAGD is independent of the presence of these protuberances. This last possibility must be taken all the more seriously, in light of the fact that PAGD functioning is able to cover the entire surface of an emitter with craters.

Whereas the discharge potentials observed in the PAGD have been shown to be relatively independent of the kind of gas present, there is a gas effect in the PAGD phenomenon, particularly in what concerns its frequency, observed when the same “run down” cathode was capable of much higher emission rates when exposed to argon, than to air. Utilising the technique of bias sputtering, it has been demonstrated that the number of charge symmetric collisions (dependent upon sheath thickness **d** and the ion mean free path) in the plasma sheath, which are responsible for lower energy secondary peaks in ion energy distribution **N**(E), at pressures of 0.2 Torr, is substantially greater in argon than in argon-nitrogen mixtures, and thus that, under these conditions, mostly Ar^+ and Ar^{++} ions impact the negatively biased electrode. In non-equilibrium RF discharges, greater ion densities have also been attained with argon, than with air. With respect to field emissions, one would expect a gas effect only with regards to changes on surface conditions, though such studies have shown contradictory effects of argon upon cathode work function.

In light of the foregoing, and given that the PAGD is an emission discharge and not a sputtering discharge per se, in the strict sense, we can conceive of the role of inert gas atoms in increasing, as compared to air or nitrogen, the ion energy density distribution at the PAGD cathode spot interface with the cathode surface emitter, and thus elicit increased emission rates from the cathode, by pulling electrons from the metal via the field effect. While this is consistent with the concept of focused distortions of space-charge field fluctuations inducing localisation of the emission foci, the argon effect can be observed in the PAGD regime over the entire range of the Paschen low vacuum curve, and into Cooke's mid to high vacuum curve, at low fields and without negative biasing. Thus, it is not simply a high pressure (nor a gas conditioning) effect, even if the gas effect in question applies to the description of a local pressure rise at the emission site/cathode spot interface, which may play a role in enhancing the local field.

Considered together, the PAGD emission-derived sputtering, the observed metallic plating of the anode and the explosive aspect of the discharge, suggest the presence of a jet of metallic vapour present in the discharge and running, contrary to the normal flow of positive ions, from the cathode to the anode. This jet appears to have properties similar to the high speed vapour ejected from the cathode in a VAD, as first detected by Tanberg with his field emission pendulum (Tanberg, R. (1930), "On the cathode of an arc drawn in vacuum", Phys. Rev., 35:1080) In fact, the VAD high field emission process is known to release, from the cathode spot, neutral atoms with energies much greater than the thermal energy of the emission discharge. This anomalous phenomenon brings into play the role of the reported cathode reaction forces detected in vacuum arc discharges (Tanberg, as above, also Kobel, E. (1930), "Pressure and high vapour jets at the cathodes of a mercury vacuum arc", Phys. Rev., 36:1636), which were thought to be due to the counterflow of neutral metallic atoms, from the cathode on to the anode (charged metallic ions are normally expected to target the cathode). In absolute units of current, this current quadrature phenomenon has been shown to reach, in the VAD regime, proportions of the order of 100 x I^2 (see also the Aspden papers referenced below).

Early interpretations attributed this to the cathode rebounding of <2% of gas substrate-derived plasma positive ions hitting the cathode and being charge-neutralised in the process, but having kept most of their thermal energy. Tanberg held instead that the counterflow of neutral particles responsible for the cathode reaction force was cathode derived, effectively, that it constituted a longitudinal interaction acting in the direction of the metallic arc jet. However, even though secondary high energy distributions of neutral atoms emanating from the cathode do not have thermal energies, their modal distribution does (Davis, W. D. and Miller, H. C. (1969) J. Appl. Phys., 40:2212) furthermore, the major anomalous atomic counterflow that accompanies the high-energy electron flow toward the anode, was shown mass spectrographically to consist predominantly of multiply ionised, positively charged ions of cathode metal, rather than neutral atoms. If this made it easier to abandon the primacy of the rebounding model, it was now more difficult for field emission theorists to accept and explain the observed high energies (ion voltages in excess of the discharge voltage drops) and the high ionisation multiplicity associated with these counter-flowing positive ions.

This field of investigation has indeed been one of the mounting sources of evidence suggesting that there is something amiss in the present laws of electrodynamics. The anomalous acceleration of counter-flowing ions, and the energy transfer mechanisms between high speed or “relativistic” electrons and ions in a plasma (Sethion, J. D. et al, "Anomalous Electron-Ion Energy Transfer in a Relativistic-Electron-Beam-Heated Plasma" Phys. Rev. Letters, Vol. 40, No. 7, pages 451-454), in these and other experiments, has been brilliantly addressed by the theory of the British physicist and mathematician, H. Aspden, who first proposed a novel formulation of the general law of electrodynamics capable of accounting for the effect of the mass ratio factor (M/m') in the parallel (and reverse) motion of charges with different masses, (Aspden, H. (1969) "The law of electrodynamics", J. Franklin Inst., 287:179; Aspden, H (1980) "Physics Unified", Sabberton Publications, Southampton, England). The anomalous forces acting on the counter-flowing metallic ions would stem from their out-of-balance interaction with the emitted high speed electrons, as predicated by the electrodynamic importance of their mass differential. This results in a fundamental asymmetry of the plasma flow between electrodes, localised on to the discontinuous interfaces of the plasma with the electrodes, namely, in the cathode dark space and in the anodic sheath: on the cathode side, electrons act upon ions, as the emitted electrons having less than zero initial velocities, drift against the incoming ion flux and in parallel with the ion and neutral counterflows; on the anode side of the discharge, positive ions flowing toward the cathode confront mainly the incoming counterflow of positive ions and neutral atoms, as the high speed electrons have abnormally transferred their energy to counter-flowing, high speed, cathodic metal ions. An out-of-balance reaction force thus results at the cathode, to which the leaving metallic atoms impart a force of equal momentum but opposite direction, a force which is added to the cathode momentum generated by impacting, normal flowing positive ions.

Moreover, Aspden confirmed theoretically the fundamental contention of Tanberg's experimental findings that an electrodynamic force will manifest itself along the direction of the discharge current flow, and thus, that the atomic counterflow is a metallic jet. Aspden further demonstrated that this asymmetry of plasma discharges does not imply any violation of the principles of conservation of energy and charge equivalence, given that there will be no out-of-balance force when such anomalous forces are considered in the context of the whole system of charge which must, perforce, include the local electromagnetic frame itself. Such discharges must be viewed as open-energy systems, in balance with their electromagnetic environment: their apparatuses may constitute materially closed or limited systems, but they are physically and energetically open systems. Current work on Aspden's formulation of Ampere's Law indicates that both classical electromagnetism and special relativity ignore precisely, in circuits or in plasma, the longitudinal interactions that coexist with transverse ones. Standing longitudinal pressure-waves, of a non-electromagnetic nature, have been previously shown in plasma electrons, which did not conform to the Bohm and Gross plasma oscillation mechanism (Pappas, P. T. (1983) "The original Ampere force and Bio-Savart and Lorentz forces", I1 Nuovo Cimento, 76B:189; Looney, D. H. and Brown, S. C. (1954) "The excitation of plasma oscillations" Phys. Rev. 93:965)

The present theoretical approach to the novel regime of electrical discharge which we have isolated in specially designed devices, and to its mixed glow-arc characteristics, suggests that a similar, out-of balance current quadrature phenomenon occurs in the discharge plasma during the low field, auto-electronic emission-triggered PAGD, and is responsible for the observed surplus of energy in the experimental system described in this report. Clearly, all the evidence we have adduced indicates that there is a powerful longitudinal component to the emission-triggered PAGD, i.e. that the discharge pulses characteristic of this pre-VAD regime are longitudinally propelled jets of cathode-ejected high speed electrons and high speed ions. We have performed experiments, in the PAGD regime of operation, with very thin axial members that bend easily when placed in the path of the discharge, or with Crooke radiometer-type paddle-wheels, and both show the presence of a net longitudinal force in the plasma discharge acting in the direction of the anode, which confirms the magnitude of the atomic counterflow (ionised and neutral) present during the PAGD, very much like Tanberg's pendulum did for the VAD.

These observations also tally with the explosive action of the emission mechanism, such as we have examined it above. In this context, two aspects of the PAGD are remarkable: the fact that a phenomenon akin to field emission occurs at low field values, for large area electrodes across large gaps, and the conclusion that the PAGD must deploy an excessively large counterflow of, in all probability, both ionised and neutral cathodic particles. The observation of ion current contributions to the cathode current on the order of 8 to 10%, in VADs, can hardly apply to the PAGD mechanism responsible for the anomalous currents and counterflows observed. Hence, we should further expect that the characteristically intermittent, or chopped current regime of the PAGD, is a major factor in the generation of disproportionately high energy longitudinal pulses and in allowing our system to capture most of the electrical energy output from the device. In all probability, field collapse at the end of discharge favours the nearly integral collection of the plasma charge, and ensures the transduction of most of the plasma energy of the pulse (blocked, as it is, from flowing back through the input port to the drive pack) to the output port, through the parallel, asymmetric capacitance bridge that interfaces with the charge recovery reservoir (the charge pack). Collapse of the field of the discharge may also be a contributing factor to the anomalous acceleration of ions, and to the observed anode plating effect.

It is equally possible that such abnormally large longitudinal pulses may never be observable, for a given arrangement and scale, above threshold frequencies of the oscillation; we have, in this sense, presented data that indicates that for a given geometry, above specific PAGD frequencies, the capture of surplus energy decreases steadily in efficiency until it ceases altogether, for a given arrangement. The point at which this surplus begins to decrease coincides with the setting in of frequency-dependent irregularities in the discharge sequence and, most importantly, it coincides with a reduction of the peak pulse current for each PAGD pulse. We have further remarked that increasing the PAGD frequency above the zero surplus point, for a given arrangement, by manipulating any of the frequency control parameters, provokes the slippage of the PAGD into a full fledged VAD regime, while input currents greatly increase and output peak currents greatly decrease (to comparable peak input levels of 10 to 15A).

The transition between the two modes of emission-triggered discharge, PAGD and VAD, thus appears to be tied in to adjustable thresholds in the frequency of the emission discontinuities; in this sense, it is rather likely that the plasma field collapse plays a major role in regularising and optimising the anomalous energies of field emissions, as in the PAGD regime. At low frequencies of low field emission, the emission regime is highly discontinuous, diachronic and regular, for it has time to fully extinguish the discharge; hence the PAGD singularity, in which the phases of each discharge pulse are well defined and sequential. Above a given high frequency, when ion and electron recombination will happen more often, before each can be collected at the electrodes, the stream of emitted discontinuities merges into a noisy, randomised continuum, where simultaneous emissions become possible and the plasma field no longer has time to collapse and fully resolve the longitudinal pulses. Any anomalous energy generated is then minimised and trapped in the plasma body and, in these conditions, the VAD regime eventually sets in. Such model would easily explain why the high field VAD experiments performed to date have never detected such extraordinarily large anomalous forces.

On the other hand, the quasi-coherent aspect of the discharge suggests that the vacuum gap, in functioning during the PAGD regime both as an insulator and as a conductor with capacitative and self-inductive properties, is periodically altered by large and intense polarisations which are resolved by the discrete emission of longitudinal pulses from the cathode. It is possible that these non-linear oscillations resulting from sudden depolarisation of the vacuum gap by high-speed explosive emissions elicited at the convection focus of the distorted field, might be in resonance or near resonance with the external circuitry, but the most apparent effect of increasing the capacitance in all bridge members is to increase the jet current and the transduced current flowing into the charge pack. The PAGD amplitude variation also presents, after the large negative discontinuity, a growing oscillation at very high resonant frequencies, which are typical of inductive chopping currents in a VAD, before extinction occurs. Unlike the VAD inductive case, in the absence of any coils other than the wire wound resistors, the PAGD relaxation oscillations which follow each pulse only extinguish the discharge when the voltage potential of the amplitude curve rises above the applied voltage, just as the plasma potential drops the most.

Given the entirely non-inductive nature of the external circuit utilised in many instances, the inductive properties in evidence are those of the vacuum device itself. It also suggests that, in the absence of any need of an applied external magnetic field for the PAGD discharge to occur coherently, it is possible that the magnitude of the currents generated produces by itself a significant self-magnetic field. Thus, we cannot rule out the possibility of a self-organisation of the plasma discharge, which may, in Prigogine's sense, constitute a dissipative structure (Prigogine, I. and George, C. (1977), "New quantisation rules for dissipative systems", Int. J. Quantum Chem., 12 (Suppl.1):177). Such self-ordering of the PAGD plasma jet is suggested by the experimentally observed transition of these pulses from the current saturated limit of the normal glow discharge region, into the PAGD regime, as a function of increasing current: smaller foci of discharge can be seen to discontinuously agglutinate into larger emission cones, or into jets with a vortex-like appearance, when the input current reaches a given threshold.

It is possible that, under these conditions, the distribution of the charge carriers and their sudden fluctuations may render any steady-state plasma boundary conditions ineffective and provoke a singularity in the discharge mechanism; this non-linear behaviour, together with any self-magnetic effects, might provide radial coherence of the plasma flow along the longitudinal path of the discharge. This concept is akin to what has been proposed for periodically fading-away solution structures referred to as “instantons”, that represent self-organising transitions between the two states of a system. The PAGD may well be an instance of an instanton type structure bridging the open, or conductive, and the closed, or insulating, states of the vacuum gap. An analytical formulation of the problem of the plasma flow from the cathode spot to the anode, which would take into account the self-magnetic and self-organising properties of the PAGD plasma channel, would be extremely difficult, given the out of balance longitudinal force, its abnormal energy transfer and associated counterflow, as well as the competition between collisional and inertial exchanges.

The plating observed at the anode most likely results from the impact of counter-flowing ions (and possibly neutral atoms), whereas the pitting of the (locally molten) cathode results from the emission of vaporised metallic material and electrons, as well as, secondarily, from bombardment by incident positive ions. The first action smoothes the surface by mirroring it (deposition of cathode-derived atoms) and abrading it, whereas the latter smoothes it in places by rounding concavities and by forming molten droplets upon local cooling, while simultaneously roughening it on the crater peripheries. One might think that this cathode roughening should lower the work function and facilitate the discharge, but the facts indicate that just the opposite must be happening in view of changes in the PAGD according to the nature and state of the cathode surface. The observed alterations of electrode work function for PAGD low field emission must thus be related to the molecular and charge effects of these different actions at the two electrodes. It appears that for large parallel plate electrodes, the PAGD low field emission is modulated by the nature and, most likely, by the molecular structure of the metallic surface layer of the emitter.

We have thus devised a system for the capture, as electricity, of the energy of anomalously energetic longitudinal pulses sequentially triggered by spontaneous emissions of high-speed electrons and ions generated from low work function cathodes, during the low field and singularly mixed PAGD regime of electrical discharge in vacuo. To confirm the above interpretation of the anomalous flux in the observed PAGD phenomenon, the cathode jet composition, as well as time-dependent and usage-dependent changes occurring in the tubes, with diverse sealed negative pressures and after submission to prolonged PAGD operation, must be analysed by mass-spectroscopy. In any event, the excess energy present in the anomalous counter-flowing force appears to stem from a discharge mechanism that effectively pulls high speed electrons and constituent atoms out of a metal surface, at low fields and with high current densities, and is modulated by a complex multiplicity of parameters.

The system described appears to transduce efficiently the observed non-linear longitudinal pulse discontinuities of the plasma field, under conditions of current saturation of the cathode, because the self-extinguishing and self-limiting properties of the discharge allows the energy from the collapse of the discharge to be captured. The particular design of the circuitry, which couples a rectification bridge to the asymmetric bridge quadrature of large capacitances, placed at the output of the PAGD generator, permits effective capture. Our findings constitute striking evidence for Aspden's contention of a need to revise our present electrodynamic concepts. The dual ported PAGD discharge tube circuits which we have described are the first electrical systems we know of which permit effective exploitation of anomalous cathode reaction forces and allow for the recovery of electrical energy from systems exhibiting this effect. Any apparent imbalance in the electrical energy input to the system and withdrawn from the system by its operator must be considered in the context of the entire continuum in which the system operates, within which it is anticipated that accepted principles of energy balance will be maintained.

Moreover, the energy conversion system of the invention has substantial utility as an electrical inverter accepting direct current, and providing one or more of a direct current output at lower voltage and higher current, variable frequency input to alternating current motors, and, by suitable combinations of discharge tube systems, more flexible DC-to-DC conversion systems.

As an alternative to the batteries used in the experiments described, a DC power supply may be utilised or, more advantageously from the viewpoint of entailing less transformation losses, a DC generator to provide the electrical energy input to the system. As a DC motor can be run directly from the rectified output of the circuit of **Fig.9** at **El-E2**, in place of a battery charge pack, DC motor/generator sets of suitable characteristics (in terms of back E.M.F. and circuit loading) can be used to charge the batteries of the drive pack, utilising the rectified PAGD output to drive the DC motor component of the set. This provides a simple, one battery pack solution, where the PAGD input and output circuits are electrically separated by the DC motor/generator interface: the drive pack is simultaneously being discharged to drive PAGD production, and charged by the DC generator output which, in turn, is being driven by the electromechanical transformation of the rectified PAGD output that would typically accrue to a charge pack in the experiments already described. The main limitations to such an arrangement lie in the efficiency of the motor and generator transformations utilised.

A pulsed DC source could be used to provide input to the circuit if suitably synchronised, but care is needed not to interfere unduly with the auto-electronic mechanism of the field induced cathode emissions.

TABLE 1

Results for the ballast resistance (and current) dependent PAGD frequency utilizing an H34 aluminum pulse generator with 128 cm^2 plates at 5.5 cm distance, in the triode configuration, at a pressure of 0.8 Torr. The circuit employed is that of the present invention, as described in the third Results Section. DCV = 560.

R in Ω	Regime of Discharge	Pulse Rate > 100 V
5,000	NGD (Cold Cathode)	0
600	PAGD	10 PPS
300	PAGD	40 PPS
150	PAGD	180 PPS
100	VAD	0
50	VAD	0

TABLE 2

128 cm^2 H220 Al; 570 volts DC; 300 Ω = R1; Diode Configuration

	PPS	p(Torr)	Cumulative Pulse Count
1)	200	0.08	$\sim 2.4 \times 10^5$
2)	200	0.5	$\sim 1.5 \times 10^6$
3)	200	0.8-1	$\sim 2.5 \times 106$
4)	25	0.5	3×10^6 pulses
5)	200	0.5	1.5×10^6 (after first electrode reversal)

TABLE 3

RESIDUAL GAS EFFECT

pressure	PPS	
in Torr	in AIR	in ARGON
0.45	ND	10
0.5	1.8 ± 0.3	ND
0.55	4.8 ± 0.9	16.7±1.8
1.0	11.4 ± 0.8	448 ± 27.4
1.25	214.5 ± 14.3	ND
2.0	36.2 ± 2.6	206 ± 19.6
		158.7 ± 24
2.5	1.36 ± 0.3	0

TABLE 4

Charge pack No. of cells	PPS	PAGD
36	0	−
31	1	+
29	10	+
19	1	+
9	0	−

TABLE 5

1 Expt. No.	2 Battery Pack	3 Position	4 Open Voltage	5 V/cell	6 % total rel. cpty.	7 Max. hr. left	8 % rel. cpty		9 Total kWh	10 ΔkWh		11 PAGD per sec
							gained	lost		gain	loss	
1	Charge	start	348	12.0	40	8			0.835			8
	Charge	end	366	12.62	83	16.6	43		1.823	0.988		
	Driver	start	576	12.52	77	15.4			2.660			
	Driver	end	572	12.43	70	14		7	2.402		0.258	
2	C	b	331	11.41	2	0.4			0.040			61
	C	a	351	12.1	47.5	9.5	45.5		1.002	0.962		
	D	b	553	12.02	40	8			1.327			
	D	a	546	11.9	33	6.6		7	1.081		0.246	
3	C	b	345	11.9	32.5	6.5			0.673			3
	C	a	361	12.45	72.5	14.4	40		1.559	0.886		
	D	b	559	12.15	51	10.2			1.710			
	D	a	552	12.0	40	8		11	1.324		0.386	
4	C	b	360	12.41	70	14			1.512			32
	C	a	373	12.86	103	>20	33		2.238	0.726		
	D	b	562	12.22	54.5	10.9			1.838			
	D	a	557	12.11	48	9.6		6.5	1.604		0.234	
5	C	b	340	11.7	20	4			0.408			2
	C	a	365	12.59	83	16.6	63		1.818	1.440		
	D	b	527	11.45	3.2	0.6			0.101			
	D	a	517	11.24	1.8	0.4		0.2	0.056		0.045	
6	C	b	340	11.72	21.5	4.3			0.438			8
	C	a	367	12.66	87.5	17.5	66		1.927	1.489		
	D	b	589	12.8	100	20			3.530			
	D	a	564	12.26	58.5	11.7		41.5	1.979		1.551	
7	C	b	318	10.97	1.2	0.24			0.023			5
	C	a	359	12.38	67.5	13.5	66.3		1.454	1.431		
	D	b	575	12.5	77	15.4			2.656			
	D	a	567	12.32	63.5	12.7		13.5	2.160		0.496	
8	C	b	328	11.71	20	4			0.393			32
	C	a	350	12.5	76.5	15.3	56.5		1.606	1.213		
	D	b	582	12.65	87.5	17.5			3.055			
	D	a	579.5	12.60	84	16.8		3.5	2.921		0.134	

1 Expt. No.	2 Battery Pack	3 Position	12 Exptl. time	13 rel. kWh/h		14 net kWh/h production	15 Breakeven efficiency	16 Cell #/ pack	17 tube	18 Cathode Area	19 Plate
				gain	loss						
1	Charge	start	21.5'			2.071	388%	29	A26	128 cm^2	H34
	Charge	end		2.791							

TABLE 5-continued

1 Expt. No.	2 Battery Pack	3 Position	20 R1 ohm	21 C3/C5 mfd	22 C7a/C7b mfd	23 Motor arm	24 Pressure	25 Gap cm	26 OV rlx. time	27 C4 mfd	28 R4 ohms	29 Motor rpm
	Driver	start							46			
	Driver	end			0.720							
2	C	b	18′			2.387	391%		29	A26	128 cm^2	H34
	C	a		3.207								
	D	b							46			
	D	a			0.820							
3	C	b	21.5′			1.396	230%		29	A26	128 cm^2	H34
	C	a		2.473								
	D	b							46			
	D	a			1.077							
4	C	b	63.5′			0.465	310%		29	A28	128 cm^2	H220
	C	a		0.686								
	D	b							46			
	D	a			0.221							
5	C	b	80′			1.064	6,750%		29	A26	128 cm^2	H34
	C	a		1.080								
	D	b							46			
	D	a			0.016							
6	C	b	21.5′			−0.173	96%		29	A26	128 cm^2	H34
	C	a		4.155								
	D	b							46			
	D	a			4.328							
7	C	b	64.5′			0.870	289%		29	A45	64 cm^2	H34
	C	a		1.331								
	D	b							46			
	D	a			0.461							
8	C	b	28.5′			2.272	906%		28	A45	64 cm^2	H34
	C	a		2.554								
	D	b							46			
	D	a			0.282							

TABLE 5-continued

1 Expt. No.	2 Battery Pack	3 Position	20 R1 ohm	21 C3/C5 mfd	22 C7a/C7b mfd	23 Motor arm	24 Pressure	25 Gap cm	26 OV rlx. time	27 C4 mfd	28 R4 ohms	29 Motor rpm
1	Charge	start	300	20,700	3,300	off	0.8 Torr	5.5	30′	NA	NA	NA
	Charge	end										
	Driver	start										
	Driver	end										
2	C	b	300	20,700	3,300	off	0.8 Torr	5.5	30′	NA	NA	NA
	C	a										
	D	b										
	D	a										
3	C	b	300	20,700	3,300	off	0.7 Torr	5.5	15′	NA	NA	NA
	C	a										
	D	b										
	D	a										
4	C	b	300	34,700	5,500	off	0.2 Torr	5.5	30′	NA	NA	NA
	C	a										
	D	b										
	D	a										
5	C	b	150	34,700	3,300	on	0.8 Torr	5.5	15′	8	500	1,200
	C	a										
	D	b										
	D	a										
6	C	b	300	20,700	3,300	on	0.8 Torr	5.5	15′	16	0	2,000
	C	a										
	D	b										
	D	a										
7	C	b	600	34,700	3,300	off	0.8 Torr	4	30′	NA	NA	NA
	C	a										
	D	b										
	D	a										
8	C	b	600	34,700	5,500	off	0.8 Torr	4	30′	NA	NA	NA
	C	a										
	D	b										
	D	a										

TABLE 6

Expt.	Battery		Load	Watts/		Total	ΔkWh		rel. kWh/h		net	
No.	Pack	Position	Voltage	cell	Hr. left	kWh	gain	loss	gain	loss	kWh/h	B. Eff.
1	C	s	335.7	4.445	4	0.516					3.014	776%
	C	e	357.5	5.05	12	1.757	1.241		3.46			
	D	s	568.0	3.20	13	1.766						
	D	e	564.6	3.175	11	1.606		0.16		0.446		
2	C	s	315.5	3.93	1	0.114					1.012	504%
	C	e	327.8	4.25	4.5	0.502	0.387		1.225			
	D	s	540.7	2.91	4	0.535						
	D	e	535.3	2.87	3.5	0.462		0.073		0.243		
3	C	s	328	4.23	2	0.245					1.175	703%
	C	e	351.7	4.91	7	0.737	0.492		1.370			
	D	s	546	2.95	5	0.680						
	D	s	545.5	2.90	4.5	0.610		0.070		0.195		

TABLE 7

1 Expt. No.	2 Config.	3 Pressure Torr	4 Tube	5 DP DCV	6 Plates DCV	7 DP DCA	8 DP Watts	9 PAGD Volts	10 PAGD V/cm	11 CP DCV
1	dd	0.8	A29	562	350	0.65	137.8	212	77.1	375
2	dd	0.09	A29	562	402	0.60	96	160	58.2	378
3	dd	0.8	A29	560	371	0.59	111.5	189	68.7	374
4	dd	0.09	A29	563	409	0.49	75.9	154	56	379
5	t	1.5	A28	561	439	0.41	49.9	122	22.2	377
6	t	1.5	A28	560	425	0.51	68.9	135	24.5	375
7	t	1.0	A28	556	398	0.48	75	158	28.7	376.5
8	t	0.5	A28	559.5	398	0.68	109.8	161.5	29.4	377.5
9	t	0.5	A28	563	390	0.75	112.45	173	31.5	373
10	sd	0.5	A28	565	422	0.47	67.2	143	26	376
11	sd	0.5	A28	561.5	415	0.50	73	146.5	26.6	380
12	sd	0.5	A28	562	413.5	0.55	81.7	148.5	27	380
13	dd	0.25	A28	553	438	0.35	40	115	41.8	381.5
14	dd	0.25	A28	549	325	0.70	156.8	224	81.5	263

1 Expt. No.	2 Config.	12 CP DCA	13 CP Watts	14 Total Resistance	15 Breakeven Efficiency	16 PPS	17 Bridge diode	18 Input diode	19 Motor status	20 FIG. 3
1	dd	1.25	468.8	326	340%	450	M860	HFR	off	+
2	dd	0.70	264.6	% 270	276%	92	M860	HFR	off	
3	dd	0.65	243.1	243	218%	500	HFR	HFR	off	
4	dd	0.76	288	314	379%	77	HFR	HFR	off	
5	t	0.58	219	298	439%	52	HFR	HFR	off	
6	t	0.69	259	265	376%	100	M860	HFR	off	
7	t	0.57	213.1	329	284%	355	M860	HFR	off	
8	t	0.67	252.9	238	230%	92	HFR	HFR	off	
9	t	0.65	280	266	249%	118	M860	HFR	off	+
10	sd	1.03	387.3	286	530%	25	M860	HFR	off	
11	sd	0.73	277.4	293	379%	11	HFR	HFR	off	+
12	sd	0.71	269.8	270	330%	10	HFR	HFR	on	+
13	dd	0.59	225.1	329	563%	10	HFR	HFR	off	
14	dd	1.36	257.7	320	228%	1	HFR	HFR	off	

TABLE 8

1 Expt. No.	2 Battery Pack	3 Position	4 Total Wh	5 Rel. Cap.	6 Torr	7 Limit in W	8 ΔkWh		9 Exptl. time	10 abs. kWh/h			11 BE
							gain	loss		gain	loss	net	
1	C	b	159	12%	0.8	90			21.5′			+664	846%
	C	a	428	32%			269			753			
	D	b	1764	85%		115							
	D	a	1732	84%				32			89		
2	C	b	118	9%	0.8	90			18′			+616	2,667%
	C	a	303.5	23%			192			640			
	D	b	542.3	26%		115							
	D	a	535	25.9%				7.3			24		
3	C	b	950.4	72%	0.2	90			70′			+186	3485%
	C	a	1,161	88%			210.9			191.7			
	D	b	660	32%		115							
	D	a	654	32%				6.5			5.6		
4	C	b	15.8	1.2%	0.8	90			64.5′			+53.7	406%
	C	a	81.9	6%			65			60			
	D	b	181	8.7%		115							
	D	a	165	8%				16			14.7		
5	C	b	34.5	2.6%	0.8	90			28.5′			+169.1	436%
	C	a	138.8	10.5%			104.3			219.6			
	D	b	1,114	54%		115							
	D	a	1,089	53%				24			50.5		
6	C	b	55.4	4.2%	0.8	90			74′			+117	483%
	C	a	237.6	18%			182.2			148			
	D	b	669.3	32%		115							
	D	a	631.7	30.6%				37.7			30.6		

1 Expt. No.	2 Battery Pack	3 Position	12 Config.	13 Tube	14 Cathode area	15 gap cm	16 PPS	17 PAGD seq. method	18 R1 ohms	19 Plate material	20	21 C3/C5 mfd	22 C7a/C7b mfd
1	C	b	Triode	A26	128 cm2	5.5	8	Continuous	300	H34		20,700	3.300
	C	a											
	D	b											
	D	a											
2	C	b	Triode	A26	128 cm2	5.5	61	Interrupted	300	H34		20,700	3,300
	C	a											
	D	b											
	D	a											
3	C	b	Triode	A28	128 cm2	5.5	32	Interrupted	300	H220		34,700	5,500
	C	a											
	D	b											
	D	a											
4	C	b	Triode	A46	64 cm2	4.0	5	Continuous	600	H34		34,700	5,500
	C	a											
	D	b											
	D	a											
5	C	b	Triode	A46	64 cm2	4.0	32	Interrupted	600	H34		34,700	5,500
	C	a											
	D	b											
	D	a											
6	C	b	Plate Diode	A29	128 cm2	5.5	8	Interrupted	300	H220		34,700	5,500
	C	a											
	D	b											
	D	a											

TABLE 9

Utilizing: Al H200, 128 cm^2 plates
DP = 46 cells
CP = 23 cells

	PPS	CP Gain per pulse in mWh	Net Gain per pulse mWh	CP Gain per second mWh	Net Gain per second mWh	Pressure in Torr
#1	1.5	22.3	11.7	33:45	17.55	0.2
#2	8	5.6	4.4	44.8	35.2	0.8
#3	110	0.78	0.27	85.8	29.7	2.0

CLAIMS

1. Apparatus comprising a discharge tube and an electrical circuit containing said discharge tube and configured to operate the latter to provide endogenous pulsatory cold cathode auto-electronic emissions, the circuit being double ported with an input port connected to a source of direct current at a potential sufficient to initiate said emissions, and an output port connected to a current sink effective to absorb at least a substantial portion of electrical energy released by collapse of said emissions.

2. Apparatus according to claim 1 configured so that the emissions occur in a pulsed abnormal glow discharge regime.

3. Apparatus according to claim 2, wherein the input port includes components ensuring that the flow of current therein is unidirectional, and incorporating impedance sufficient to limit the flow of current therein.

4. Apparatus according to claim 2, including capacitors connected to the discharge tube, the input port and the output port, which provide charge storage in the input port and direct current isolation between the input and output ports.

5. Apparatus according to claim 4, wherein the output port comprises a rectifier having an input connected to said capacitors, reservoir capacitance connected to the output of said rectifier, and reverse current blocking devices connected between said reservoir capacitance and the current sink.

6. Apparatus according to claim 5, wherein the rectifier is a bridge rectifier, and the reservoir capacitance is provided by a capacitor bridge having ends connected to outputs of the bridge rectifier, and an intermediate point connected to one input of the bridge rectifier.

7. Apparatus according to claim 4, further including an alternating current motor and a capacitor in series, connected between the connections of said capacitors to the output port.

8. Apparatus according to claim 2, wherein the current sink comprises a secondary battery.

9. Apparatus according to claim 2, wherein the current sink comprises an electric motor.

10. Apparatus according to claim 2, wherein the direct current source comprises a secondary battery.

11. Apparatus according to claim 2, wherein the direct current source is a DC generator.

12. Apparatus according to claim 9, wherein the motor is a DC motor.

13. Apparatus according to claim 10, including a circuit for charging from the output port a battery to be used as the direct current source.

14. Apparatus according to claim 2, wherein the direct current source is a rectified AC source.

15. Apparatus according to claim 2, wherein the discharge tube is connected as a single diode.

16. Apparatus according to claim 2, wherein the discharge tube is connected as a multiple diode with plates connected as cathodes and an intermediate electrode connected as an anode.

17. Apparatus according to claim 2, wherein the discharge tube is connected as a triode, with an intermediate electrode functioning as an auxiliary cathode.

18. Apparatus according to claim 2, wherein a first potential is applied to the input port by the source of direct current to induce emission, a back EMF is applied to the output port by the current sink, and an extinction potential of the emissions is greater than the back EMF.

19. A method of energy conversion, comprising initiating plasma eruptions from the cathode of a discharge tube operating in a pulsed abnormal glow discharge regime utilising electrical energy from a source in a first circuit connected to said discharge tube, and capturing electrical energy generated by the collapse of such eruptions in a second circuit connected to said discharge tube.

20. A method according to claim 19, wherein current flowing into the discharge tube during said eruptions is at least 50 ma.

21. A method according to claim 19, wherein current flowing into the discharge tube during said eruptions is at least 500 ma.

22. A method according to claim 19, in which charge carriers within plasma outputs are accelerated through at least one of an electric and magnetic field.

23. A method of energy conversion, comprising inducing endogenous pulsatory low-field, large-area cold-cathode auto-electronic emissions from the cathode of a discharge tube capable of sustaining such emissions, utilising electrical energy from a source in a first circuit connected to said discharge tube, and capturing electrical energy generated by the collapse of such emissions in a second circuit connected to said discharge tube.

FRANKLIN MEAD AND JACK NACHAMKIN

Patent US 5,590,031 31st December 1996 Inventors: Franklin Mead & Jack Nachamkin

SYSTEM FOR CONVERTING ELECTROMAGNETIC RADIATION ENERGY TO ELECTRICAL ENERGY

This patent shows a system for converting Zero-Point Energy into conventional electrical power.

ABSTRACT

A system is disclosed for converting high-frequency zero-point electromagnetic radiation energy to electrical energy. The system includes a pair of dielectric structures which are positioned near each other and which receive incident zero-point electromagnetic radiation. The volumetric sizes of the structures are selected so that they resonate at a frequency of the incident radiation. The volumetric sizes of the structures are also slightly different so that the secondary radiation emitted from them at resonance, interferes with each other producing a beat frequency radiation which is at a much lower frequency than that of the incident radiation and which is amenable to conversion to electrical energy. An antenna receives the beat frequency radiation. The beat frequency radiation from the antenna is transmitted to a converter via a conductor or waveguide and converted to electrical energy having a desired voltage and waveform.

US Patent References:

3882503	May., 1975	Gamara	343/100.
4725847	Feb., 1988	Poirier	343/840.
5008677	Apr., 1991	Trigon et al.	342/17.

DESCRIPTION

BACKGROUND OF THE INVENTION

The invention relates generally to conversion of electromagnetic radiation energy to electrical energy, and, more particularly, to conversion of high frequency bandwidths of the spectrum of a type of radiation known as ‘zero-point electromagnetic radiation’ to electrical energy.

The existence of zero-point electromagnetic radiation was discovered in 1958 by the Dutch physicist M. J. Sparnaay. Mr. Sparnaay continued the experiments carried out by Hendrik B. G. Casimir in 1948 which showed the existence of a force between two uncharged parallel plates which arose from electromagnetic radiation surrounding the plates in a vacuum. Mr. Sparnaay discovered that the forces acting on the plates arose from not only thermal radiation but also from another type of radiation now known as classical electromagnetic zero-point radiation. Mr. Sparnaay determined that not only did the zero-point electromagnetic radiation exist in a vacuum but also that it persisted even at a temperature of absolute zero. Because it exists in a vacuum, zero-point radiation is homogeneous and isotropic as well as ubiquitous. In addition, since zero-point radiation is also invariant with respect to Lorentz transformation, the zero-point radiation spectrum has the characteristic that the intensity of the radiation at any frequency is proportional to the cube of that frequency. Consequently, the intensity of the radiation increases without limit as the frequency increases resulting in an infinite energy density for the radiation spectrum. With the introduction of the zero-point radiation into the classical electron theory, a vacuum at a temperature of absolute zero is no longer considered empty of all electromagnetic fields. Instead, the vacuum is now considered as filled with randomly fluctuating fields having the zero-point radiation spectrum. The special characteristics of the zero-point radiation which are that it has a virtually infinite energy density and that it is ubiquitous (even present in outer space) make it very desirable as an energy source. However, because high energy densities exist at very high radiation frequencies and because conventional methods are only able to convert or extract energy effectively or efficiently only at lower frequencies at which zero-point radiation has relatively low energy densities, effectively tapping this energy source has been believed to be unavailable using conventional techniques for converting electromagnetic energy to electrical or other forms of easily usable energy. Consequently, zero-point electromagnetic radiation energy which may potentially be used to power interplanetary craft as well as provide for society's other needs has remained unharnessed.

There are many types of prior art systems which use a plurality of antennas to receive electromagnetic radiation and provide an electrical output from them. An example of such a prior art system is disclosed in U.S. Pat. No.

3,882,503 to Gamara. The Gamara system has two antenna structures which work in tandem and which oscillate by means of a motor attached to them in order to modulate the radiation reflected from the antenna surfaces. The reflecting surfaces of the antennas are also separated by a distance equal to a quarter wavelength of the incident radiation. However, the Gamara system does not convert the incident radiation to electrical current for the purpose of converting the incident electromagnetic radiation to another form of readily usable energy. In addition, the relatively large size of the Gamara system components make it unable to resonate at and modulate very high frequency radiation.

What is therefore needed is a system which is capable of converting high frequency electromagnetic radiation energy into another form of energy which can be more readily used to provide power for transportation, heating, cooling as well as various other needs of society. What is also needed is such a system which may be used to provide energy from any location on earth or in space.

SUMMARY OF THE INVENTION

It is a principle object of the present invention to provide a system for converting electromagnetic radiation energy to electrical energy.

It is another object of the present invention to provide a system for converting electromagnetic radiation energy having a high frequency to electrical energy.

It is another object of the present invention to provide a system for converting zero-point electromagnetic radiation energy to electrical energy.

It is another object of the present invention to provide a system for converting electromagnetic radiation energy to electrical energy which may used to provide such energy from any desired location on earth or in space.

It is another object of the present invention to provide a system for converting electromagnetic radiation energy to electrical energy having a desired waveform and voltage.

It is an object of the present invention to provide a miniaturised system for converting electromagnetic radiation energy to electrical energy in order to enhance effective utilisation of high energy densities of the electromagnetic radiation.

It is an object of the present invention to provide a system for converting electromagnetic radiation energy to electrical energy which is simple in construction for cost effectiveness and reliability of operation.

Essentially, the system of the present invention utilises a pair of structures for receiving incident electromagnetic radiation which may be propagating through a vacuum or any other medium in which the receiving structures may be suitably located. The system of the present invention is specifically designed to convert the energy of zero-point electromagnetic radiation; however, it may also be used to convert the energy of other types of electromagnetic radiation. The receiving structures are preferably composed of dielectric material in order to diffract and scatter the incident electromagnetic radiation. In addition, the receiving structures are of a volumetric size selected to enable the structures to resonate at a high frequency of the incident electromagnetic radiation based on the parameters of frequency of the incident radiation and propagation characteristics of the medium and of the receiving structures. Since zero-point radiation has the characteristic that its energy density increases as its frequency increases, greater amounts of electromagnetic energy are available at higher frequencies. Consequently, the size of the structures are preferably miniaturised in order to produce greater amounts of energy from a system located within a space or area of a given size. In this regard, the smaller the size of the receiving structures, the greater the amount of energy that can be produced by the system of the present invention.

At resonance, electromagnetically induced material deformations of the receiving structures produce secondary fields of electromagnetic energy therefrom which may have evanescent energy densities several times that of the incident radiation. The structures are of different sizes so that the secondary fields arising therefrom are of different frequencies. The difference in volumetric size is very small so that interference between the two emitted radiation fields, and the receiving structures at the two different frequencies produces a beat frequency radiation which has a much lower frequency than the incident radiation. The beat frequency radiation preferably is at a frequency which is sufficiently low that it may be relatively easily converted to usable electrical energy. In contrast, the incident zero-point radiation has its desirable high energy densities at frequencies which are so high that conventional systems for converting the radiation to electrical energy either cannot effectively or efficiently so convert the radiation energy or simply cannot be used to convert the radiation energy for other reasons.

The system of the present invention also includes an antenna which receives the beat frequency radiation. The antenna may be a conventional metallic antenna such as a loop or dipole type of antenna or a rf cavity structure which partially encloses the receiving structures. The antenna feeds the radiation energy to an electrical conductor (in the case of a conventional dipole or comparable type of antenna) or to a waveguide (in the case of a rf cavity structure). The conductor or waveguide feeds the electrical current (in the case of the electrical conductor) or the electromagnetic radiation (in the case of the waveguide) to a converter which converts the received energy to useful electrical energy. The converter preferably includes a tuning circuit or comparable device so that it can effectively receive the beat frequency radiation. The converter may include a transformer to convert the energy to electrical current having a desired voltage. In addition, the converter may also include a rectifier to convert the energy to electrical current having a desired waveform.

BRIEF DESCRIPTION OF THE DRAWINGS

FIG.1

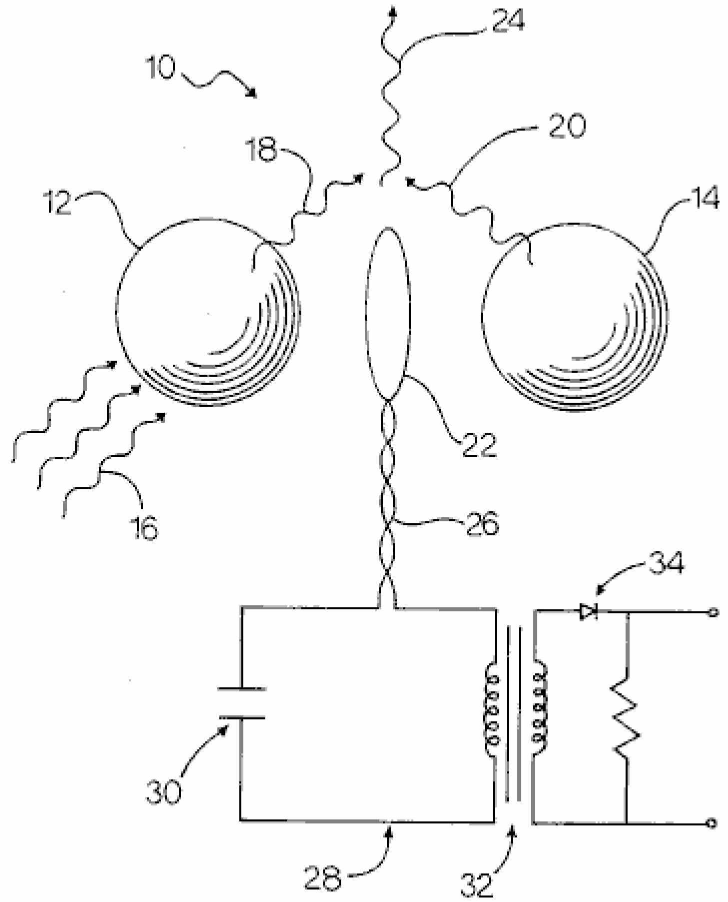

Fig.1 is a plan view of the receiving structures and antenna of a first embodiment of the system of the present invention with a schematic view of the conductor and converter thereof and also showing the incident primary and emitted secondary electromagnetic radiation.

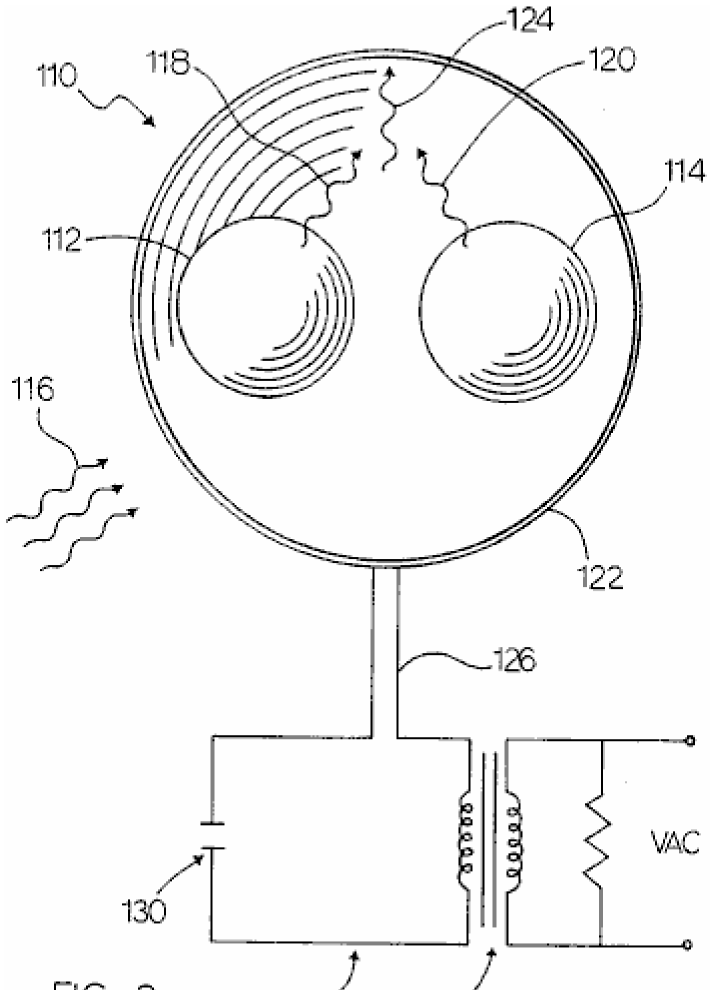

FIG. 2

Fig.2 is a front view of the receiving structures, antenna and waveguide of a second embodiment of the system of the present invention with a schematic view of the converter thereof and also showing the incident primary and emitted secondary electromagnetic radiation.

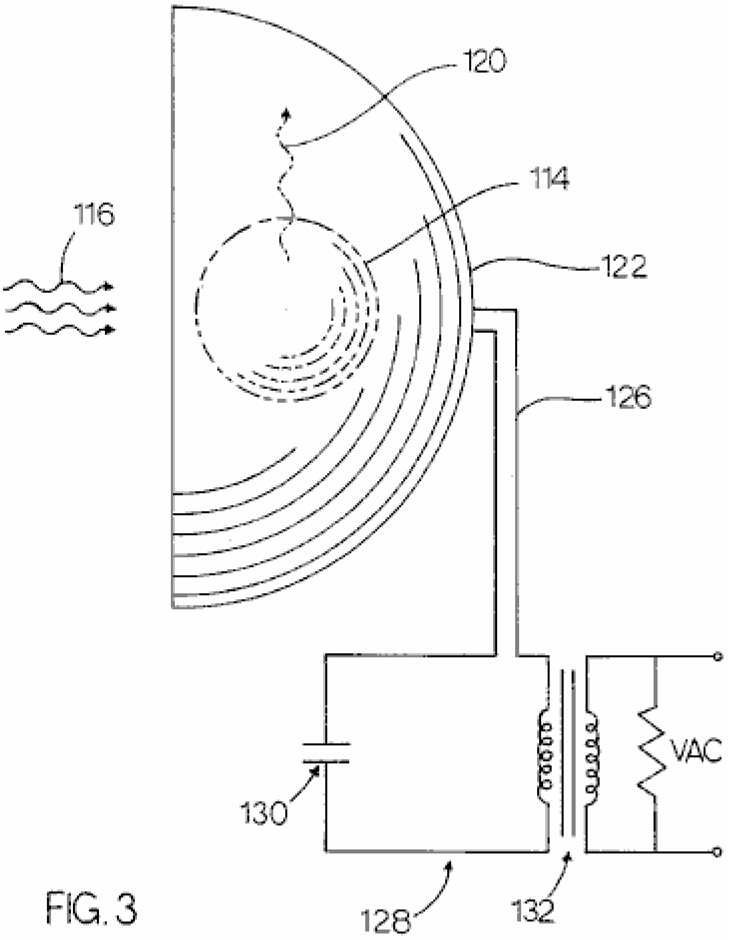

FIG. 3

Fig.3 is a perspective view of the receiving structures, antenna and waveguide of the second embodiment shown in **Fig.2** with a schematic view of the converter thereof and also showing the incident primary and emitted secondary electromagnetic radiation.

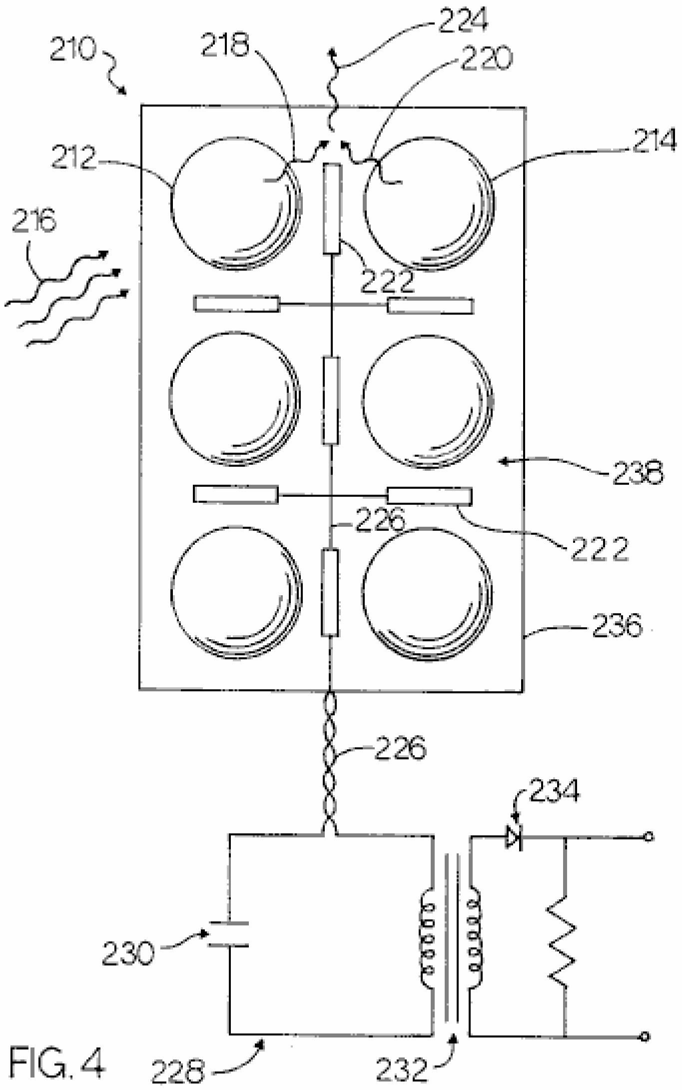

FIG. 4

Fig.4 is a front view of the substrate and a plurality of pairs of the receiving structures and a plurality of antennas of a third embodiment of the system of the present invention with a schematic view of the conductor and converter thereof and also showing the incident primary and emitted secondary electromagnetic radiation.

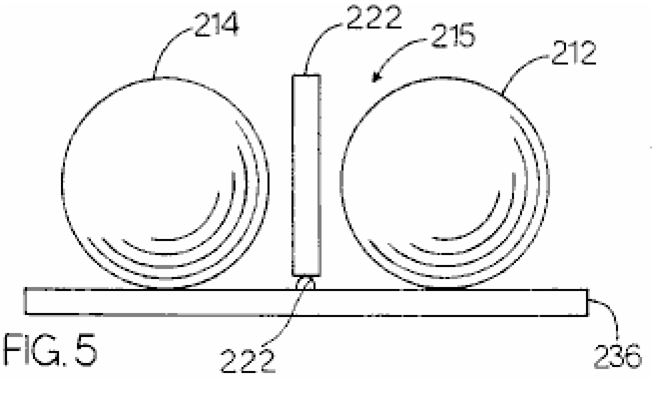

FIG. 5

Fig.5 is a top view of some of the components of the third embodiment of the system of the present invention showing two of the plurality of pairs of receiving structures and two of the plurality of antennas mounted on the substrate.

FIG. 6

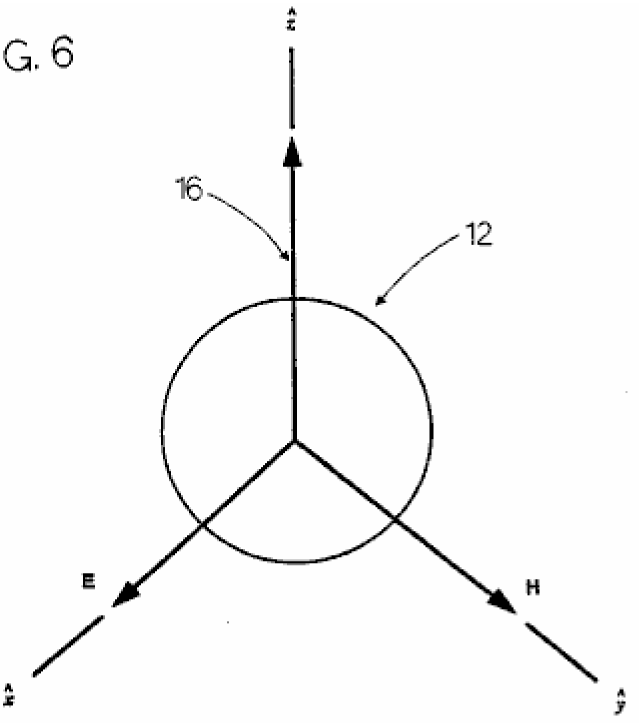

Fig.6 is a diagram of a receiving structure of the system of the present invention showing an incident electromagnetic plane wave impinging on the receiving structure and illustrating the directions of the electric and magnetic field vectors thereof.

FIG.7

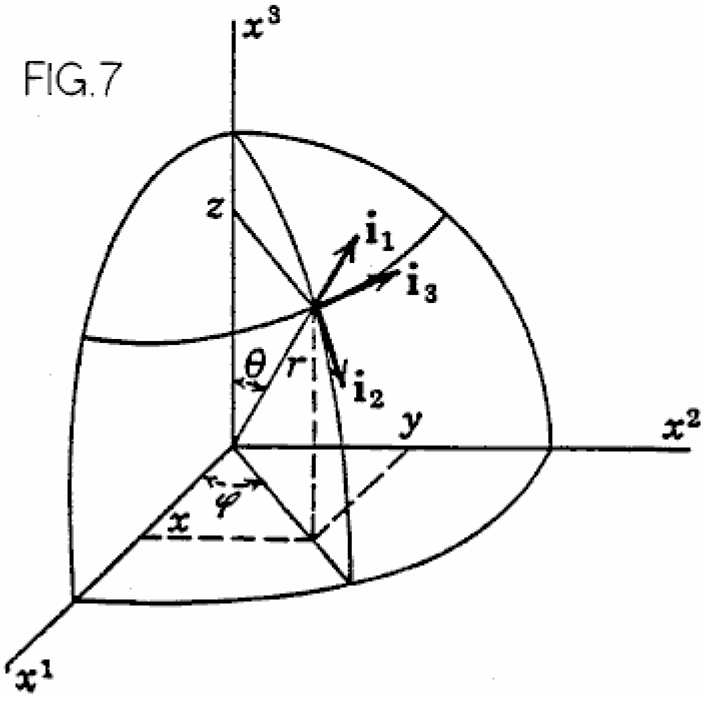

Fig.7 is a diagram of a spherical co-ordinate system as used in the formulas utilised in the system of the present invention.

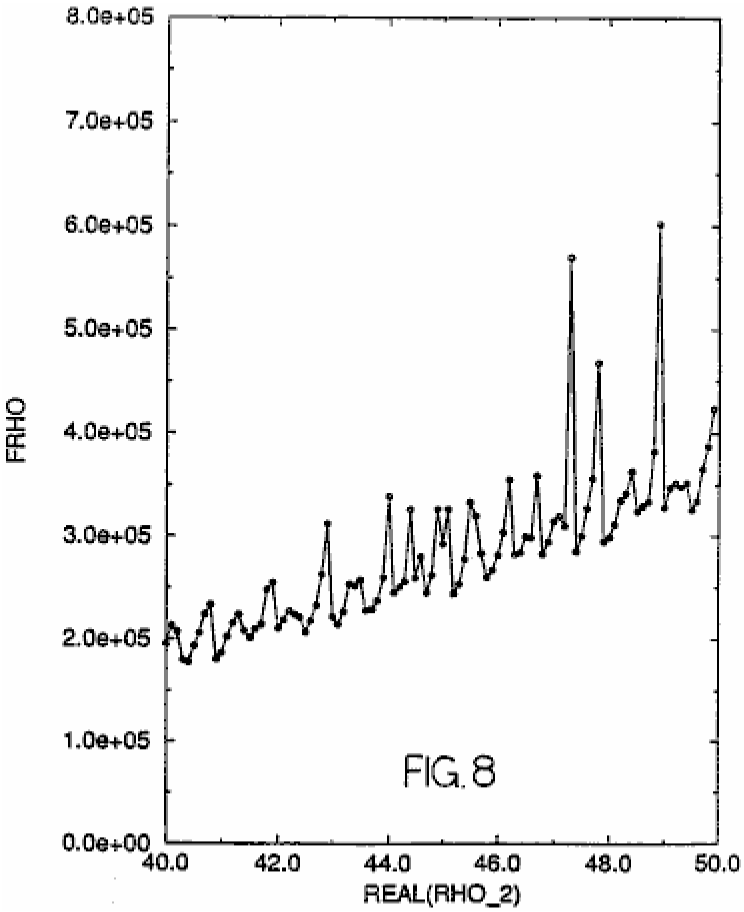

FIG. 8

Fig.8 is a graph showing an imaginary rho parameter plotted against a real rho parameter illustrating the values thereof at resonance as well as values thereof at other than resonance.

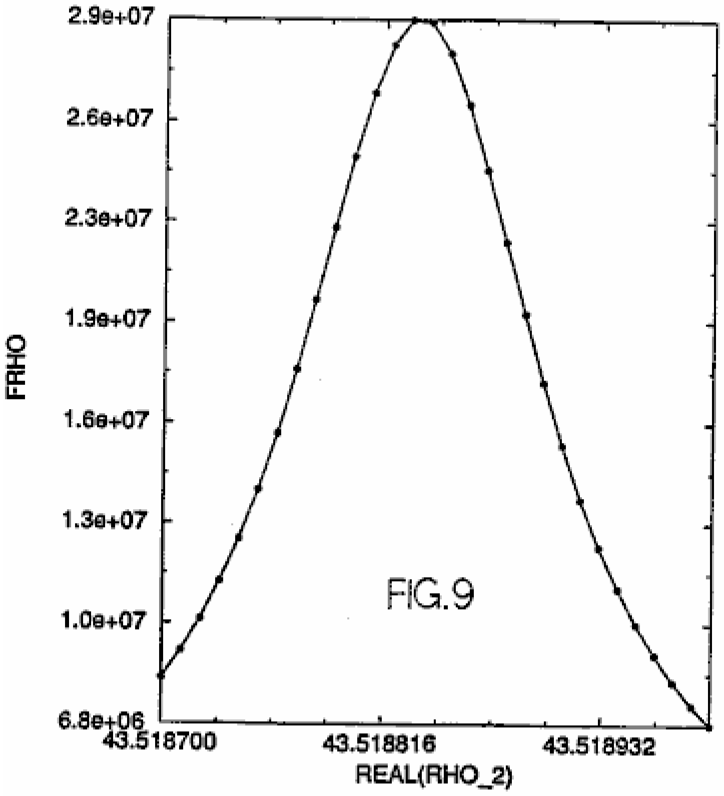

FIG. 9

Fig.9 is a graph showing a portion of the graphical representation shown in **Fig.8** illustrating the real and imaginary rho values at or near a single resonance.

DETAILED DESCRIPTION OF THE PREFERRED EMBODIMENT

Referring to the drawings, a first embodiment of the present invention is generally designated by the numeral **10**. The system **10** includes a first and second means for receiving **12** and **14** incident electromagnetic radiation **16**. The means for receiving **12** and **14** are preferably a pair of spherical structures **12** and **14** which are preferably composed of a dielectric material. Alternatively, the spheres **12** and **14** may be cubical structures or any other suitable shape. The spheres **12** and **14** may be mounted on a suitable foundation by any suitable mounting means (not shown), or spheres **12** and **14** may be suspended from a suitable foundation by any suitable suspension means (not shown). The spheres **12** and **14** are preferably composed of a dielectric material. The dielectric spheres **12** and **14** scatter and concentrate electromagnetic waves. At very sharply defined frequencies, the spheres **12** and **14** will have resonances wherein the internal energy densities can be five orders of magnitude larger than the energy density of the incident electromagnetic field driving the spheres **12** and **14**. At resonance, the electromagnetic stresses, equivalent to pressures proportional to the energy density, can cause material deformation of the spheres **12** and **14** which produce a secondary electromagnetic field. The spheres **12** and **14** are preferably positioned proximal to each other, as shown in **Fig.1**. Although the proximity of the spheres to each other will adversely affect the resonances, the very high "Q"s of the isolated-sphere resonances results in such adverse affect being relatively small. However, the proximity of the spheres **12** and **14** allows the spheres to interact electromechanically which increases the magnitude of the secondary radiation emitted from them.

The electromagnetic radiation incident upon the spheres **12** and **14** which drives the spheres to resonance is preferably zero-point radiation **16**. However, other types of electromagnetic radiation may also be used to drive the spheres **12** and **14**, if desired.

The effect of a dielectric sphere such as **12** or **14** on an incident electromagnetic radiation such as a plane wave thereof is shown in **Fig.6**. The plane wave propagates in the z axis direction and is diffracted by the sphere **12** resulting in scattering thereof. This scattering is commonly known as Mie scattering. The incident radiation wave has an electric vector component which is linearly polarised in the x axis direction and a magnetic vector component which is linearly polarised in the y axis direction.

An electromagnetic wave incident upon a structure produces a forced oscillation of free and bound charges in synch with the primary electromagnetic field of the incident electromagnetic wave. The movements of the charges produce a secondary electromagnetic field both inside and outside the structure. The secondary electromagnetic radiation comprising this secondary electromagnetic field is shown in **Fig.1** and designated by the numerals **18** and **20**. An antenna which is shown simply as a loop antenna but may also be a dipole or any other suitable type of antenna, is also shown in **Fig.1** and designated by the numeral **22**. The non-linear mutual interactions of the spheres produces interference between the secondary electromagnetic radiation **18** and **20** produces a beat frequency radiation **24** which is preferably at a much lower frequency than the primary radiation **16**. It is this beat frequency radiation **24** which is desired for conversion into electrical energy because it preferably is within the frequency range of rf radiation which may be converted into electrical energy by generally conventional systems. Thus, the radiation **24** received by the antenna **22** is fed via an electrical conductor **26** to a means for converting the beat frequency radiation **24** to electrical energy. This means for converting is designated by the numeral **28** and preferably includes a tuning capacitor **30** and a transformer **32** and a rectifier (preferably a diode) **34**. Instead of including the capacitor **30**, transformer **32** and rectifier **34**, the converter **28** may alternatively include an rf receiver of any suitable type.

The resultant field at any point is the vector sum of the primary and secondary fields. For the equations that follow, the structure receiving the incident plane wave is a sphere of radius a having a propagation constant k_1 positioned in an infinite, homogeneous medium having a propagation constant k_2. The incident plane wave propagates in the z axis direction and is as shown in **Fig.6**. The spherical co-ordinate system used for the vector spherical wave functions is shown in **Fig.7**.

Note: As this patent contains so many non-standard keyboard characters, the remainder of this document is produced using direct images of the original text.

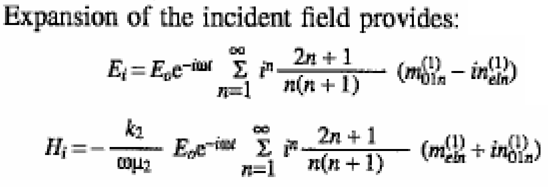

Expansion of the incident field provides:

$$E_i = E_o e^{-i\omega t} \sum_{n=1}^{\infty} i^n \frac{2n+1}{n(n+1)} \left(m^{(1)}_{o1n} - i n^{(1)}_{e1n}\right)$$

$$H_i = -\frac{k_2}{\omega \mu_2} E_o e^{-i\omega t} \sum_{n=1}^{\infty} i^n \frac{2n+1}{n(n+1)} \left(m^{(1)}_{e1n} + i n^{(1)}_{o1n}\right)$$

where E is the electric field and H is the magnetic field; and

$$\overset{(1)}{m}_{\substack{01n\\ e1n}} = \pm \frac{1}{\sin\theta}\, j_n(k_2R)P_n^{\,1}(\cos\theta) \substack{\cos\\ \sin}\, \phi i_2 - j_n(k_2R)\, \frac{\partial p_n^{\,1}}{\partial\theta}\, \substack{\sin\\ \cos}\, \phi i_3$$

$$\overset{(1)}{n}_{\substack{0ln\\ e1n}} = \frac{n(n+1)}{k_2R}\, j_n(k_2R)P_n^{\,1}(\cos\theta) \substack{\sin\\ \cos}\, \phi i_1 + \frac{1}{k_2R}\, [k_2Rj_n(k_2R)]' \times$$

$$\frac{\partial P_n^{\,1}}{\partial\theta}\, \substack{\sin\\ \cos}\, \phi i_2 \pm \frac{1}{k_2R\sin\theta}\, [k_2Rj_n(k_2R)]'P_n^{\,1}(\cos\theta) \substack{\cos\\ \sin}\, \phi i_3.$$

The electric and magnetic fields of the incident wave transmitted into the sphere i.e., R<a, can be similarly expanded:

$$E_t = E_0 e^{-i\omega t} \sum_{n=1}^{\infty} i^n \frac{2n+1}{n(n+1)} \left(a_n^{tm}\, {}^{(1)}_{01n} - i b_n^{tn}\, {}^{(1)}_{e1n} \right)$$

$$H_t = \frac{k_2}{\phi\mu_1}\, E_0 e^{-i\omega t} \sum_{n=1}^{\infty} i^m \frac{2n+1}{n(n+1)} \left(b_n^{tm}\, {}^{(1)}_{e1n} - i a_n^{tn}\, {}^{(1)}_{01n} \right)$$

If $j_n(k_2R)$ is replaced by $h_n^{(1)}(k_2R)$ in the previous equations, the functions $m^{(1)}$ and $n^{(1)}$ become $m^{(3)}$ and $n^{(3)}$. The outgoing fields i.e., R>a, are represented by:

$$E_R = E_0 e^{-i\omega t} \sum_{n=1}^{\infty} i^n \frac{2n+1}{n(n+1)} \left(a_n^{rm}\, {}^{(3)}_{01n} - i b_n^{rn}\, {}^{(3)}_{e1n} \right)$$

$$H_r = \frac{k_2}{\phi\mu_1}\, E_0 e^{-i\omega t} \sum_{n=1}^{\infty} i^m \frac{2n+1}{n(n+1)} \left(b_n^{rm}\, {}^{(3)}_{e1n} - i a_n^{rn}\, {}^{(3)}_{01n} \right)$$

where H_r represents the resultant wave in the medium surrounding the sphere. At resonance, the values of ρ at resonance require that the a_n^t and b_n^t coefficients be infinite. In order to determine these values of a_n^t and b_n^t, the boundary conditions at the sphere radius are needed. Since there must be continuity of the E and H values at the surface, the following equations are used:

$i_1 \times (E_i + E_r) = i_1 \times E_t$ and

$i_1 \times (H_i + H_r) = i_1 \times H_t$

which lead to two pairs of inhomogeneous equations:

$a_n^t j_n(N\rho) - a_n^r h_n^{(1)}(\rho) = j_n(\rho)$

$\mu_2 a_n^t [N\rho j_n(N\rho)]' - \mu_1 a_n^r [\rho h_n^{(1)}(\rho)]' = \mu_1 [\rho j_n(\rho)]'$ and

$\mu_2 N b_n^t j_n(N\rho) - \mu_1 b_n^r h_n^{(1)}(\rho) = \mu_1 j_n(\rho)$

$b_n^t [N\rho j_n(N\rho)]' - N b_n^r [\rho h_n^{(1)}(\rho)]' = N[\rho j_n(\rho)]'$

where $k_1 = Nk_2$, $\rho = k_2 a$, $k_1 a = N\rho$. Spherical Bessel functions of the first kind are denoted by j_n, while those of the third kind are denoted by $h_n^{(1)}$. The resulting equations are:

$$a_n{}^l = \frac{\mu_1 j_n(\rho)[\rho h_n^{(1)}(\rho)]' - \mu_1 h_n^{(1)}\rho)[\rho j_n(\rho)]'}{\mu_1 j_n(N\rho)[\rho h_n^{(1)}(\rho)]' - \mu_2 h_n^{(1)}(\rho)[N\rho j_n(N\rho)]'}$$

and

$$b_n{}^l = \frac{\mu_1 N \mathrm{j}_n(\rho)[\rho h_n^{(1)}(\rho)]' - \mu_1 \mathrm{N} h_n^{(1)}\rho)[\rho j_n(\rho)]'}{\mu_2 N^2 j_n(N\rho)[\rho h_n^{(1)}(\rho)]' - \mu_1 h_n^{(1)}(\rho)[N\rho j_n(N\rho)]'}$$

At a resonance, the denominator of either $a_n{}^l$ or $b_n{}^l$ will be zero. Thus, ρ values are found using the above equations that correspond to a resonant combination of angular frequency (ω) and radius (a) for a given sphere material and given surrounding medium. In determining such values of ρ, the following equations are also specifically used:

$$\rho = ak_2 = a\omega\sqrt{\epsilon_2\mu_2} \text{ and}$$

$$\rho_1 = (k_1/k_2)\rho$$

where ρ_1 corresponds to the sphere material. An iterative method is preferably used to find the desired values of ρ at resonance. In calculating ρ utilizing the above equations for purposes of example, it was assumed that $\mu_1=\mu_2=\mu_0=4\pi\times 10^{-7}$ and $\epsilon_2=\epsilon_0=8.85419\times10^{-12}$.

One major root of ρ which was found has a value of:

Real (ρ)=+66.39752607619131

Imaginary (ρ)=−0.6347867071968998.

These particular values are not shown in FIG. **8**. However, other values of ρ found using the equations set forth herein are shown in FIG. **8**. The peaks in FIG. **8** are the resonances. One of these resonances shown in FIG. **8** is shown in detail in FIG. **9**. These resonance values are shown for purposes of example. Other resonances also exist which have not been determined; thus, not all possible resonance values are shown in FIGS. **8** and **9**.

Calculation of these values also allows the determination of a possible am combination which would have these root values. For ρ, ϵ (epsilon)=ϵ_0 and $\mu=\mu_0$, and

$$\rho = a\omega\sqrt{\epsilon_0\mu_0} = a\omega/c.$$

Expressed in SI units, the speed of light $c=2.99792458\times10^{14}$ m/s. If an a value of 10^{-6} m is assumed for the examples shown herein, then:

$$\omega=\rho c/a=1.9919\times10^{16}-i1.9044\times10^{14} \text{ radians/s.}$$

This is an example of the angular frequency required within the impingent EM radiation in order to create a resonant situation. Examples of other resonances were indicated, and these are shown in FIG. **8**. No complex-frequency plane waves exist. Therefore, the calculations were made by considering only the real portion of the above root and setting the imaginary portion equal to zero. However, upon doing this, the iterative calculation procedure becomes insensitive to any root in the vicinity of the root's real portion. In the iterative calculation procedure, initially a range of ρ values is input into the equations. These ρ values are in the neighborhood of the prospective root. A range of ρ values is subsequently studied to find any imaginary ρ i.e., fρ (a function of ρ), peaks in that range. Next, once a peak has been chosen, the function order n giving the dominant fρ is determined. This also gives a clue as to whether the peak is due to a magnetic resonance (a_n approaches infinity) or an electrical resonance (b_n approaches infinity). A large number of Newton-Raphson iterations is preferably performed in order to converge upon a root ρ value.

FIGS. **2** and **3** show a second embodiment of the present invention generally designated by the numeral **110**. Embodiment **110** is essentially the same as embodiment **10** except that the antenna is a rf cavity structure **122** which feeds the received beat frequency radiation **124** to a waveguide **126**. Embodiment **110** also preferably includes two spheres **112** and **114** which receive the primary incident electromagnetic radiation **116** and emit the secondary electromagnetic radiation **118** and **120**. As with the spheres **18** and **20** of embodiment **10**, spheres **118** and **120** are preferably composed of a dielectric material. Embodiment **110** also includes converter **128**, capacitor **130**, transformer **132** and rectifier **134** which are essentially identical to the correspondingly numbered elements of embodiment **10**. Therefore, a description of these components of embodiment **110** will not be repeated in order to promote brevity. In addition, the same equations and method of calculation set forth above with regard to embodiment **10** also apply to embodiment. Therefore, their description will not be repeated in order to promote brevity.

FIGS. **4** and **5** show a third embodiment of the present invention generally designated by numeral **210**. Embodiment **210** is essentially identical to the first embodiment **10** except that the embodiment **210** includes a plurality of pairs **215** of receiving means (spheres) **212** and **214** mounted on a substrate **236**. The spheres **212** and **214** are thus in the form of an array **238**. The pairs **215** of the array **238** are preferably positioned proximal to each other in order to maximize the amount of energy extracted from a particular area or space of a given size. Since, as set forth hereinabove, the energy density of the zero point radiation increases as the frequency of the radiation increases, it is desirable that the spheres resonate at as high a bandwidth of frequencies as possible. Because the spheres **212** and **214** must be small in direct proportion to the wavelength of the high frequencies of the incident electromagnetic radiation **216** at which resonance is desirably obtained, the spheres **212** and **214** are preferably microscopic in size. Current lithographic techniques are capable of manufacturing such microscopically small spheres mounted on a suitable substrate thereby providing a suitably miniaturized system **210**. A miniaturized system enhances the energy output capability of the system by enabling it to resonate at higher frequencies at which there are correspondingly higher energy densities. Consequently, utilization of array **238** in the system **210** enhances the maximum amount of electrical energy provided by the system **210**.

Lithographic techniques may be more amenable to manufacturing microscopically small receiving structures **212** and **214** which may be disc shaped, semispherical or have another shape other than as shown in FIGS. **4** and **5**. Consequently, the receiving means **212** and **214** may accordingly have such alternative shapes rather than the spherical shape shown in FIGS. **4** and **5**. In addition, a large number of small spheres may be manufactured by bulk chemical reactions. Packing a volume with such spheres in close proximity could enhance the output of energy.

Embodiment **210** also includes a plurality of antennas **222** positioned preferably between the spheres **212** and **214** which receive the beat frequency radiation **224** produced by the interference between the secondary radiation **218** and **220**. The antennas **222** are shown as loop antennas **222** but may be any other suitable type of antennas as well.

Embodiment **210** has a plurality of electrical conductors **226** which preferably include traces mounted on the substrate **236** which occupies a finite volume. The electrical conductors **226** feed the electrical output from the antennas **222** to a suitable converter **228** which preferably includes tuning capacitor **230**, transformer **232** and rectifier **234**, as with embodiments **10** and **110**. Except as set forth above, the components of embodiment **210** are identical to embodiment **10** so the detailed description of these components will not be repeated in order to promote brevity. In addition, the same equations and method of calculation set forth above for embodiment **10** also apply to embodiment **210**. Therefore, the description of these equations and method of calculation will not be repeated in order to promote brevity.

Accordingly, there has been provided, in accordance with the invention, a system which converts high frequency zero point electromagnetic radiation into electrical energy effectively and efficiently and thus fully satisfies the objectives set forth above. It is to be understood that all terms used herein are descriptive rather than limiting. Although the invention has been specifically described with regard to the specific embodiments set forth herein, many alternative embodiments, modifications and variations will be apparent to those skilled in the art in light of the disclosure set forth herein. Accordingly, it is intended to include all such alternatives, embodiments, modifications and variations that fall within the spirit and scope of the invention as set forth in the claims hereinbelow.

What is claimed is:

1. A system for converting incident electromagnetic radiation energy to electrical energy, comprising:

a first means for receiving incident primary electromagnetic radiation, said means for receiving producing emitted secondary electromagnetic radiation at a first frequency, said first means for receiving having a first volumetric size selected to resonate at a frequency within the frequency spectrum of the incident primary electromagnetic radiation in order to produce the secondary electromagnetic radiation at the first frequency at an enhanced energy density;

a second means for receiving the incident primary electromagnetic radiation, said means for receiving producing emitted secondary electromagnetic radiation at a second frequency, the secondary radiation at the first frequency and the secondary radiation at the second frequency interfering to produce secondary radiation at a lower frequency than that of the incident primary radiation, said second means for receiving having a second volumetric size selected to resonate at a frequency within the frequency spectrum of the incident primary electromagnetic radiation in order to produce the emitted secondary electromagnetic radiation at the second frequency at an enhanced energy density;

an antenna for receiving the emitted secondary electromagnetic radiation at the lower frequency, said antenna providing an electrical output responsive to the secondary electromagnetic radiation received;

a converter electrically connected to said antenna for receiving electrical current output from said antenna and converting the electrical current output to electrical current having a desired voltage and waveform.

2. The system of claim **1** wherein:

said first means for receiving is composed of a dielectric material; and

said second means for receiving is composed of a dielectric material.

3. The system of claim **1** wherein:

said first means for receiving is spherical; and

said second means for receiving is spherical.

4. A system for for converting incident zero point electromagnetic radiation energy to electrical energy, comprising:

a first means for receiving incident primary zero point electromagnetic radiation, said means for receiving producing emitted secondary electromagnetic radiation at a first frequency;

a second means for receiving the incident primary zero point electromagnetic radiation, said means for receiving producing emitted secondary electromagnetic radiation at a second frequency, the secondary radiation at the first frequency and the secondary radiation at the second frequency interfering to produce secondary radiation at a beat frequency which is lower than that of the incident primary radiation;

an antenna for receiving the emitted secondary electromagnetic radiation at the lower frequency, said antenna providing an electrical output responsive to the secondary electromagnetic radiation received;

means for transmitting the emitted secondary electromagnetic radiation at the beat frequency from said antenna, said means for transmitting connected to said antenna;

a converter connected to said means for transmitting for receiving the emitted secondary electromagnetic radiation at the beat frequency from said antenna and converting the same to electrical current having a desired voltage and waveform.

5. The system of claim **4** wherein:

said first means for receiving has a first volumetric spherical size selected to resonate in response to the incident primary electromagnetic radiation in order to produce the secondary electromagnetic radiation at the first frequency at an enhanced energy density; and

said second means for receiving has a second volumetric spherical size selected to resonate in response to the incident primary electromagnetic radiation in order to produce the emitted secondary electromagnetic radiation at the second frequency at an enhanced energy density, said first and second volumetric sizes selected based on parameters of propagation constant of said first and second means for receiving, propagation constant of medium in which said first and second means for receiving are located and frequency of the incident primary electromagnetic radiation.

6. The system of claim **5** wherein the first and second volumetric sizes are selected by utilizing the formulas:

$$a_n{}^t = \frac{\mu_1 j_n(\rho)[\rho h_n^{(1)}(\rho)]' - \mu_1 h_n^{(1)}\rho)[\rho j_n(\rho)]'}{\mu_1 j_n(N\rho)[\rho h_n^{(1)}(\rho)]' - \mu_2 h_n^{(1)}(\rho)[N\rho j_n(N\rho)]'}$$

$$b_n{}^t = \frac{\mu_1 N j_n(\rho)[\rho h_n^{(1)}(\rho)]' - \mu_1 N h_n^{(1)}\rho)[\rho j_n(\rho)]'}{\mu_2 N^2 j_n(N\rho)[\rho h_n^{(1)}(\rho)]' - \mu_1 h_n^{(1)}(\rho)[N\rho j_n(N\rho)]'}$$

$$\rho = a\omega\sqrt{\epsilon_2\mu_2}$$

wherein at a resonance, the denominator of either equation for $a_n{}^t$ or $b_n{}^t$ will be approximately zero and wherein k_1=propagation constant of the means for receiving, k_2=propagation constant of medium through which the incident electromagnetic radiation propagates, a is the radius of either means for receiving, $N=k_1/k_2$, $\rho=k_2a$, $k_1a=N\rho$, $a_n{}^t$=magnitude of oscillations of the electric field of the nth order, $b_n{}^t$=magnitude of oscillations of the magnetic field of the nth order, ω=angular frequency of the incident electromagnetic radiation, ε is the permittivity of the material or medium and μ is the permeability of the material or medium.

7. The system of claim **6** wherein the radius of the first means for receiving is different from the radius of the second means for receiving, difference between the radius of said first means for receiving and the radius of said second means for receiving selected so that the beat frequency resulting from the difference is a frequency which facilitates conversion of the beat frequency electromagnetic radiation to electrical energy.

8. The system of claim **4** wherein:

said first means for receiving is composed of a dielectric material; and

said second means for receiving is composed of a dielectric material.

9. The system of claim **4** wherein:

said first means for receiving is spherical; and

said second means for receiving is spherical.

10. The system of claim **4** wherein said antenna is positioned generally between said first and second means for receiving.

11. The system of claim **4** wherein said antenna is a loop antenna.

12. The system of claim **4** wherein said antenna is a generally concave shell partially enclosing said first and second means for receiving.

13. The system of claim **4** wherein said means for transmitting is a waveguide.

14. A system for for converting incident zero point electromagnetic radiation energy to electrical energy, comprising:

a substrate;

a plurality of pairs of first means for receiving incident primary zero point electromagnetic radiation and second means for receiving incident primary zero point electromagnetic radiation, said plurality of pairs of means for receiving mounted on said substrate, said first means for receiving producing emitted secondary electromagnetic radiation at a first frequency, said second means for receiving the incident primary zero point electromagnetic radiation producing emitted secondary electromagnetic radiation at a second frequency, the secondary radiation at the first frequency and the secondary radiation at the second frequency interfering to produce secondary radiation at a beat frequency which is lower than that of the incident primary radiation, said first means for receiving having a first volumetric size selected to resonate in response to the incident primary electromagnetic radiation in order to produce the secondary electromagnetic radiation at the first frequency at an enhanced energy density, and said second means for receiving having a second volumetric size selected to resonate in response to the incident primary electromagnetic radiation in order to produce the emitted secondary electromagnetic radiation at the second frequency at an enhanced energy density, said first and second volumetric sizes selected based on parameters of propagation constant of said first and second means for receiving, propagation constant of medium in which said first and second means for receiving are located and frequency of the incident primary electromagnetic radiation, said first and second volumetric sizes being different from each other;

a plurality of antennas for receiving the emitted secondary electromagnetic radiation at the lower frequency, said antenna providing an output responsive to the secondary electromagnetic radiation received, said plurality of antennas mounted on said substrate, each of said plurality of antennas receiving the emitted secondary electromagnetic radiation of one of said pairs of first and second means for receiving;

means for transmitting the emitted secondary electromagnetic radiation at the beat frequency from said antenna, said means for transmitting connected to said plurality of antennas;

a converter connected to said means for transmitting for receiving the emitted secondary electromagnetic radiation at the beat frequency from said antenna and converting the same to electrical current having a desired voltage and waveform.

STANLEY MEYER

US Patent 4,936,961 June 26, 1990 Inventor: Stanley A. Meyer

METHOD FOR THE PRODUCTION OF A FUEL GAS

Please note that this is a re-worded excerpt from this patent. It describes one of the methods which Stan used to split water into hydrogen and oxygen using very low levels of input power.

OBJECTS OF THE INVENTION

It is an object of the invention to provide a fuel cell and a process in which molecules of water are broken down into hydrogen and oxygen gases, and other formerly dissolved within the water is produced. As used herein the term "fuel cell" refers to a single unit of the invention comprising a water capacitor cell, as hereinafter explained, that produces the fuel gas in accordance with the method of the invention.

BRIEF DESCRIPTION OF THE DRAWINGS:

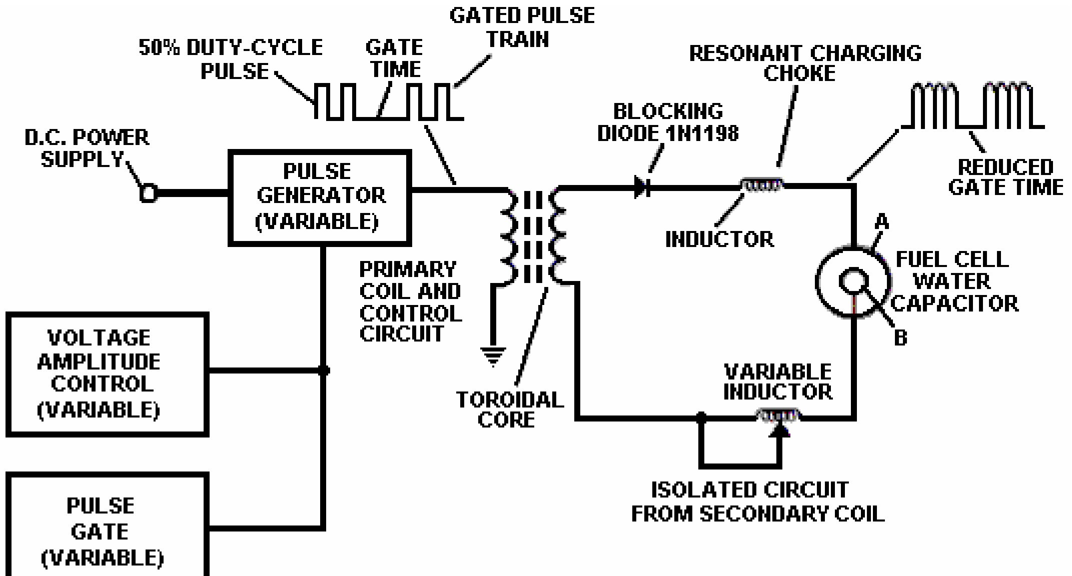

FIGURE 1

Fig.1 Illustrates a circuit useful in the process.

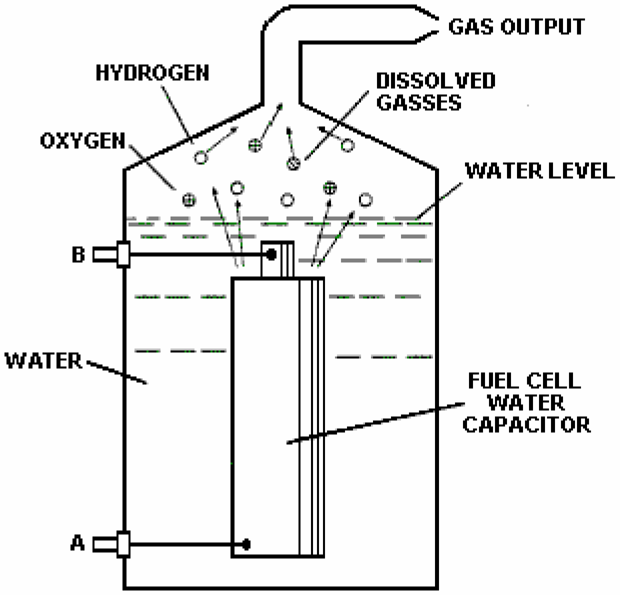

FIG 2

Fig.2 Shows a perspective of a "water capacitor" element used in the fuel cell circuit.

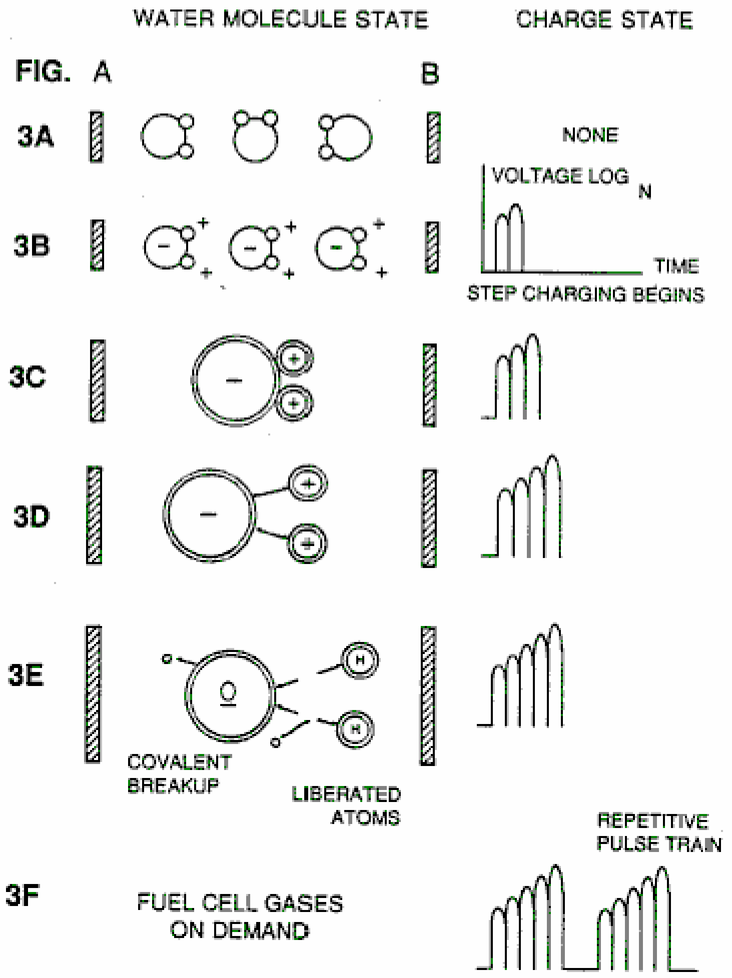

FIG. 3 (Parts A to F)

Figs. 3A through 3F are illustrations depicting the theoretical bases for the phenomena encountered during operation of the invention herein.

DESCRIPTION OF THE PREFERRED EMBODIEMENT

In brief, the invention is a method of obtaining the release of a gas mixture including hydrogen on oxygen and other dissolved gases formerly entrapped in water, from water consisting of:
(a) Providing a capacitor, in which the water is included as a dielectric liquid between capacitor plates, in a resonant charging choke circuit that includes an inductance in series with the capacitor;
(b) Subjecting the capacitor to a pulsating, unipolar electric voltage field in which the polarity does not pass beyond an arbitrary ground, whereby the water molecules within the capacitor are subjected to a charge of the same polarity and the water molecules are distended by their subjection to electrical polar forces;
(c) Further subjecting in said capacitor to said pulsating electric field to achieve a pulse frequency such that the pulsating electric field induces a resonance within the water molecule;
(d) Continuing the application of the pulsating frequency to the capacitor cell after resonance occurs so that the energy level within the molecule is increased in cascading incremental steps in proportion to the number of pulses;
(e) Maintaining the charge of said capacitor during the application of the pulsing field, whereby the co-valent electrical bonding of the hydrogen and oxygen atoms within said molecules is destabilised such that the force of the electrical field applied, as the force is effective within the molecule, exceeds the bonding force of the molecule, and hydrogen and oxygen atoms are liberated from the molecule as elemental gases; and
(f) Collecting said hydrogen and oxygen gases, and any other gases that were formerly dissolved within the water, and discharging the collected gases as a fuel gas mixture.

The process follows the sequence of steps shown in the following **Table 1** in which water molecules are subjected to increasing electrical forces. In an ambient state, randomly oriented water molecules are aligned with respect to a molecule polar orientation.
They are next, themselves polarised and "elongated" by the application of an electrical potential to the extent that covalent bonding of the water molecule is so weakened that the atoms dissociate and the molecule breaks down into hydrogen and oxygen elemental components.
Engineering design parameters based on known theoretical principles of electrical circuits determine the incremental levels of electrical and wave energy input required to produce resonance in the system whereby the fuel gas comprised of a mixture of hydrogen, oxygen, and other gases such as air were formerly dissolved within the water, is produced.

TABLE 1

Process Steps:
The sequence of the relative state of the water molecule and/or hydrogen/oxygen/other atoms:

A. (ambient state) random
B. Alignment of polar fields
C. Polarisation of molecule
D. Molecular elongation
E. Atom liberation by breakdown of covalent bond
F. Release of gases

In the process, the point of optimum gas release is reached at a circuit resonance. Water in the fuel cell is subjected to a pulsating, polar electric field produced by the electrical circuit whereby the water molecules are distended by reason of their subjection to electrical polar forces of the capacitor plates. The polar pulsating frequency applied is such that the pulsating electric field induces a resonance in the molecule. A cascade effect occurs and the overall energy level of specific water molecules is increased in cascading, incremental steps. The hydrogen and oxygen atomic gases, and other gas components formerly entrapped as dissolved gases in water, are released when the resonant energy exceeds the covalent bonding force of the water molecule. A preferred construction material for the capacitor plates is T304-grade stainless steel which is
non-chemical reactive with water, hydrogen, or oxygen. An electrically conductive material which is inert in the fluid environment is a desirable material of construction for the electrical field plates of the "water capacitor" employed in the circuit.

Once triggered, the gas output is controllable by the attenuation of operational parameters. Thus, once the frequency of resonance is identified, by varying the applied pulse voltage to the water fuel cell assembly, gas output is varied. By varying the pulse shape and/or amplitude or pulse train sequence of the initial pulsing wave source, final gas output is varied. Attenuation of the voltage field frequency in the form of OFF and ON pulses likewise affects output.

The overall apparatus thus includes an electrical circuit in which a water capacitor having a known dielectric property is an element. The fuel gases are obtained from the water by the disassociation of the water molecule. The water molecules are split into component atomic elements (hydrogen and oxygen gases) by a voltage stimulation process called the electrical polarisation process which also releases dissolved gases entrapped in the water.

From the outline of physical phenomena associated with the process described in **Table 1**, the theoretical basis of the invention considers the respective states of molecules and gases and ions derived from liquid water. Before voltage stimulation, water molecules are randomly dispersed throughout water in a container. When a unipolar voltage pulse train such as shown in **Figs.3B** through **3F** is applied to positive and negative capacitor plates, an increasing voltage potential is induced in the molecules in a linear, step like charging effect. The electrical field of the particles within a volume of water including the electrical field plates increases from a low energy state to a high energy state successively is a step manner following each pulse-train as illustrated figuratively in the depictions of **Figs.3A** through **3F**. The increasing voltage potential is always positive in direct relationship to negative ground potential during each pulse. The voltage polarity on the plates which create the voltage fields remains constant although the voltage charge increases. Positive and negative voltage "zones" are thus formed simultaneously in the electrical field of the capacitor plates.

In the first stage of the process described in **Table 1**, because the water molecule naturally exhibits opposite electrical fields in a relatively polar configuration (the two hydrogen atoms are positively electrically charged relative to the negative electrically charged oxygen atom), the voltage pulse causes initially randomly oriented water molecules in the liquid state to spin and orient themselves with reference to positive and negative poles of the voltage fields applied. The positive electrically charged hydrogen atoms of said water molecule are attracted to a negative voltage field; while, at the same time, the negative electrically charged oxygen atoms of the same water molecule are attracted to a positive voltage field. Even a slight potential difference applied to inert, conductive plates of a containment chamber which forms a capacitor will initiate polar atomic orientation within the water molecule based on polarity differences.

When the potential difference applied causes the orientated water molecules to align themselves between the conductive plates, pulsing causes the voltage field intensity to be increased in accordance with **Fig.3B**. As further molecule alignment occurs, molecular movement is hindered. Because the positively charged hydrogen atoms of said aligned molecules are attracted in a direction opposite to the negatively charged oxygen atoms, a polar charge alignment or distribution occurs within the molecules between said voltage zones, as shown in **Fig.3B**. And as the energy level of the atoms subjected to resonant pulsing increases, the stationary water molecules become elongated as shown in **Fig.3C** and **Fig.3D**. Electrically charged nuclei and electrons are attracted toward opposite electrically charged equilibrium of the water molecule.

As the water molecule is further exposed to an increasing potential difference resulting from the step charging of the capacitor, the electrical force of attraction of the atoms within the molecule to the capacitor plates of the chamber also increase in strength. As a result, the covalent bonding between which form the molecule is weakened --- and ultimately terminated. The negatively charged electron is attracted toward the positively charged hydrogen atoms, while at the same time, the negatively charged oxygen atoms repel electrons.

In a more specific explanation of the "sub-atomic" action the occurs in the water fuel cell, it is known that natural water is a liquid which has a dielectric constant of 78.54 at 20 degrees C. and 1 atmosphere pressure. [Handbook of Chemistry & Physics, 68th ed., CRC Press(Boca Raton, Florida (1987-88)), Section E-50. H20(water)].

When a volume of water is isolated and electrically conductive plates, that are chemically inert in water and are separated by a distance, are immersed in water, a capacitor is formed, having a capacitance determined by the surface area of the plates, the distance of their separation and the dielectric constant of water.

When water molecules are exposed to voltage at a restricted current, water takes on an electrical charge. By the laws of electrical attraction, molecules align according to positive and negative polarity fields of the molecule and the alignment field. The plates of the capacitor constitute such as alignment field when a voltage is applied.

When a charge is applied to a capacitor, the electrical charge of the capacitor equals the applied voltage charge; in a water capacitor, the dielectric property of water resists the flow of amps in the circuit, and the water molecule itself, because it has polarity fields formed by the relationship of hydrogen and oxygen in the covalent bond, and intrinsic dielectric property, becomes part of the electrical circuit, analogous to a "microcapacitor" within the capacitor defined by the plates.

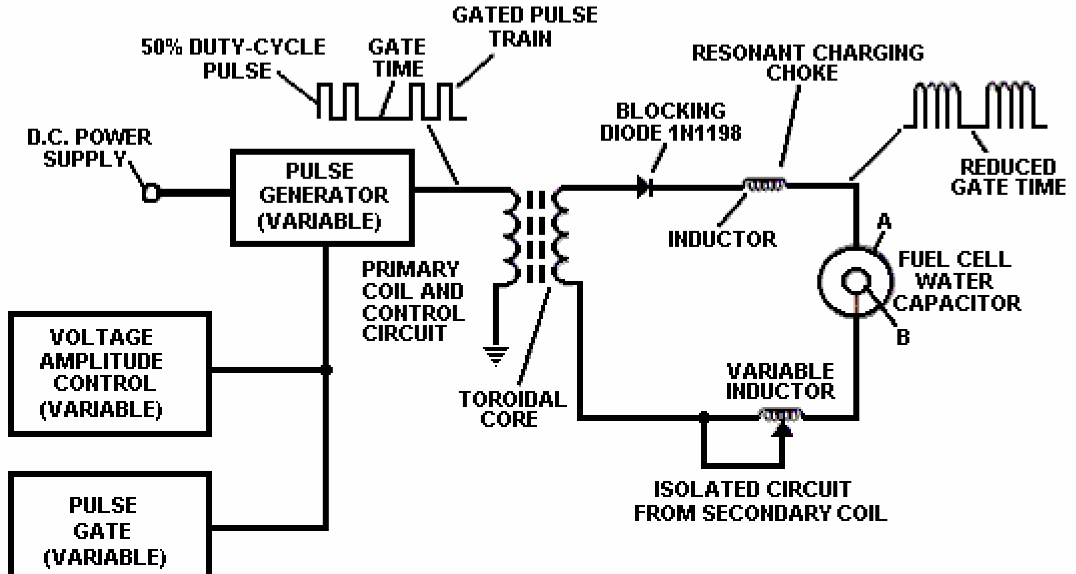

FIGURE 1

In the Example of a fuel cell circuit of **Fig.1**, a water capacitor is included. The step-up coil is formed on a conventional toroidal core formed of a compressed ferromagnetic powered material that will not itself become permanently magnetised, such as the trademarked "Ferramic 06# "Permag" powder as described in Siemens Ferrites Catalogue, CG-2000-002-121, (Cleveland, Ohio) No. F626-1205". The core is 1.50 inch in diameter and 0.25 inch in thickness. A primary coil of 200 turns of 24 gauge copper wire is provided and coil of 600 turns of 36 gauge wire comprises the secondary winding.

In the circuit of **Fig.1**, the diode is a 1N1198 diode which acts as a blocking diode and an electric switch that allows voltage flow in one direction only. Thus, the capacitor is never subjected to a pulse of reverse polarity.

The primary coil of the toroid is subject to a 50% duty cycle pulse. The toroidal pulsing coil provides a voltage step-up from the pulse generator in excess of five times, although the relative amount of step-up is determined by preselected criteria for a particular application. As the stepped-up pulse enters first inductor (formed from 100 turns of 24 gauge wire 1 inch in diameter), an electromagnetic field is formed around the inductor, voltage is switched off when the pulse ends, and the field collapses and produces another pulse of the same polarity i.e., another positive pulse is formed where the 50% duty cycle was terminated. Thus, a double pulse frequency is produced; however, in pulse train of unipolar pulses, there is a brief time when pulses are not present.

By being so subjected to electrical pulses in the circuit of **Fig.1**, water confined in the volume that includes the capacitor plates takes on an electrical charge that is increased by a step charging phenomenon occurring in the water capacitor. Voltage continually increases (to about 1000 volts and more) and the water molecules starts to elongate.

The pulse train is then switched off; the voltage across the water capacitor drops to the amount of the charge that the water molecules have taken on, i.e., voltage is maintained across the charged capacitor. The pulse train is the reapplied.

Because a voltage potential applied to a capacitor can perform work, the higher the voltage the higher the voltage potential, the more work is performed by a given capacitor. In an optimum capacitor that is wholly non-conductive, zero (0) current flow will occur across the capacitor. Thus, in view of an idealised capacitor circuit, the object of the water capacitor circuit is to prevent electron flow through the circuit, i.e. such as occurs by electron flow or leakage through a resistive element that produces heat. Electrical leakage in the water will occur, however, because of some residual conductivity and impurities or ions that may be otherwise present in the water. Thus, the water capacitor is preferably chemically inert. An electrolyte is not added to the water.

In the isolated water bath, the water molecule takes on charge, and the charge increases. The object of the process is to switch off the covalent bonding of the water molecule and interrupt the subatomic force, i.e. the electrical force or electromagnetic force, that binds the hydrogen and oxygen atoms to form a molecule so that the hydrogen and oxygen separate.

Because an electron will only occupy a certain electron shell (shells are well known) the voltage applied to the capacitor affects the electrical forces inherent in the covalent bond. As a result of the charge applied by the plates, the applied force becomes greater than the force of the covalent bonds between the atom of the water molecule;

and the water molecule becomes elongated. When this happens, the time share ratio of the electron shells is modified.

In the process, electrons are extracted from the water bath; electrons are not consumed nor are electrons introduced into the water bath by the circuit as electrons are conventionally introduced in as electrolysis process. There may nevertheless occur a leakage current through the water. Those hydrogen atoms missing electrons become neutralised; atoms are liberated from the water. The charged atoms and electrons are attracted to the opposite polarity voltage zones created between the capacitor plates. The electrons formerly shared by atoms in the water covalent bond are reallocated such that neutral elemental gases are liberated.

In the process, the electrical resonance may be reached at all levels of voltage potential. The overall circuit is characterised as a "resonant charging choke" circuit which is an inductor in series with a capacitor that produces a resonant circuit. [SAMS Modern Dictionary of Electronics, Rudolf Garff, copyright 1984, Howard W. Sams & Co. (Indianapolis, Ind.), page 859.] Such a resonant charging choke is on each side of the capacitor. In the circuit, the diode acts as a switch that allows the magnetic field produced in the inductor to collapse, thereby doubling the pulse frequency and preventing the capacitor from discharging. In this manner a continuous voltage is produced across the capacitor plates in the water bath; and the capacitor does not discharge. The water molecules are thus subjected to a continuously charged field until the breakdown of the covalent bond occurs.

As noted initially, the capacitance depends on the dielectric properties of the water and the size and separation of the conductive elements forming the water capacitor.

EXAMPLE 1

In an example of the circuit of **Fig.1** (in which other circuit element specifications are provided above), two concentric cylinders 4 inches long formed the water capacitor of the fuel cell in the volume of water. The outside cylinder was 0.75 inch in outside diameter; the inner cylinder was 0.5 inch in outside diameter. Spacing from the outside of the inner cylinder to the inner surface of the outside cylinder was 0.0625 inch. Resonance in the circuit was achieved at a 26 volt applied pulse to the primary coil of the toroid at 0 KHz (*suspected mis-typing for 10KHz*), and the water molecules disassociated into elemental hydrogen and oxygen and the gas released from the fuel cell comprised a mixture of hydrogen, oxygen from the water molecule, and gases formerly dissolved in the water such as the atmospheric gases or oxygen, nitrogen, and argon.

In achieving resonance in any circuit, as the pulse frequency is adjusted, the flow of amps is minimised and the voltage is maximised to a peak. Calculation of the resonance frequency of an overall circuit is determined by known means; different cavities have a different frequency of resonance dependant on parameters of the water dielectric, plate size, configuration and distance, circuit inductors, and the like. Control of the production of fuel gas is determined by variation of the period of time between a train of pulses, pulse amplitude and capacitor plate size and configuration, with corresponding value adjustments to other circuit components.

The wiper arm on the second conductor tunes the circuit and accommodates to contaminants in water so that the charge is always applied to the capacitor. The voltage applied determines the rate of breakdown of the molecule into its atomic components. As water in the cell is consumed, it is replaced by any appropriate means or control system.

Variations of the process and apparatus may be evident to those skilled in the art.

CLAIMS:

1. A method of obtaining the release of a gas mixture including hydrogen and oxygen and other dissolved gases formerly entrapped in water, from water, consisting of:

- **(a)** Providing a capacitor in which water is included as a dielectric between capacitor plates, in a resonant charging choke circuit that includes an inductance in series with the capacitor;
- **(b)** Subjecting the capacitor to a pulsating, unipolar electric charging voltage in which the polarity does not pass beyond an arbitrary ground, whereby the water molecules within the capacitor plates;
- **(c)** Further subjecting the water in said capacitor to a pulsating electric field resulting from the subjection of the capacitor to the charging voltage such that the pulsating electric field induces a resonance within the water molecules;
- **(d)** Continuing the application of the pulsating charging voltage to the capacitor after the resonance occurs so that the energy level within the molecules is increased in cascading incremental steps in proportion to the number of pulses;
- **(e)** Maintaining the charge of said capacitor during the application of the pulsating charge voltage, whereby the covalent electrical bonding of the hydrogen and oxygen atoms within said molecules is destabilised, such

that the force of the electrical field applied to the molecules exceeds the bonding force within the molecules, and the hydrogen and oxygen atoms are liberated from the molecules as elemental gases.

2. The method of claim 1 including the further steps of collecting said liberated gases and any other gases that were formerly dissolved within the water and discharging said collected gases as a fuel gas mixture.

STANLEY MEYER

US Patent 4,389,981 28th June 1983 Inventor: Stanley A. Meyer

HYDROGEN GAS INJECTOR SYSTEM FOR INTERNAL COMBUSTION ENGINES

Please note that this is a re-worded excerpt from this patent. It describes one method for using hydrogen and oxygen gases to fuel a standard vehicle engine.

ABSTRACT

System and apparatus for the controlled intermixing of a volatile hydrogen gas with oxygen and other non-combustible gasses in a combustion system. In a preferred arrangement the source of volatile gas is a hydrogen source, and the non-combustible gasses are the exhaust gasses of the combustion system in a closed loop arrangement. Specific structure for the controlled mixing of the gasses, the fuel flow control, and safety are disclosed.

CROSS REFERENCES AND BACKGROUND

There is disclosed in my co-pending U.S. patent application Serial No. 802,807 filed Sept. 16, 1981 for a Hydrogen-Generator, a generating system converting water into hydrogen and oxygen gasses. In that system and method the hydrogen atoms are dissociated from a water molecule by the application of a non-regulated, non-filtered, low-power, direct current voltage electrical potential applied to two non-oxidising similar metal plates having water passing between them. The sub-atomic action is enhanced by pulsing this DC voltage. The apparatus comprises structural configurations in alternative embodiments for segregating the generated hydrogen gas from the oxygen gas.

In my co-pending patent application filed May 5, 1981, U.S. Serial No. 262,744 now abandoned for Hydrogen-Airdation Processor, non-volatile and non-combustible gasses are controlled in a mixing stage with a volatile gas. The hydrogen airdation processor system utilises a rotational mechanical gas displacement system to transfer, meter, mix, and pressurise the various gasses. In the gas transformation process, ambient air is passed through an open flame gas-burner system to eliminate gasses and other substances present. After that, the non-combustible gas-mixture is cooled, filtered to remove impurities, and mechanically mixed with a pre-determined amount of hydrogen gas. This results in a new synthetic gas.

This synthetic gas-formation stage also measures the volume and determines the proper gas-mixing ratio for establishing the desired burn-rate of hydrogen gas. The rotational mechanical gas displacement system in that process determines the volume of synthetic gas to be produced.

The above-noted hydrogen airdation processor, of my co-pending application, is a multi-stage system suited to special applications. Whereas the hydrogen generator system of my other mentioned co-pending application does disclose a very simple and unique hydrogen generator.

In my co-pending patent application Serial No. 315,945, filed Oct. 18, 1981 there is disclosed a combustion system incorporating a mechanical drive system. In one instance, this is designed to drive a piston in an automotive device. There is shown a hydrogen generator for developing hydrogen gas, and perhaps other non-volatile gasses such as oxygen and nitrogen. The hydrogen gas with the attendant non-volatile gasses is fed via a line to a controlled air intake system. The combined hydrogen, non-volatile gasses, and the air, after inter-mixing, are fed to a combustion chamber where they are ignited. The exhaust gasses of the combustion chamber are returned in a closed loop arrangement to the mixing chamber to be used again as the non-combustible gas component. Particular applications and structural embodiments of the system are disclosed.

SUMMARY OF THE INVENTION

The system of the present invention in its most preferred embodiment is for a combustion system utilising hydrogen gas; particularly to drive the pistons in an car engine. The system utilises a hydrogen generator for developing hydrogen gas. The hydrogen gas and other non-volatile gasses are then fed, along with oxygen, to a mixing chamber. The mixture is controlled in such a way as to lower the temperature of the combustion to bring it in line with that of the currently existing commercial fuels. The hydrogen gas feed line to the combustion chamber includes a fine linear control gas flow valve. An air intake is the source of oxygen and it also includes a variable valve. The exhaust gasses from the combustion chamber are utilised in a controlled manner as the non-combustible gasses.

The hydrogen generator is improved by the inclusion of a holding tank which provides a source of start-up fuel. Also, the hydrogen gas generator includes a pressure-controlled safety switch on the combustion chamber which disconnects the input power if the gas pressure rises above the required level. The simplified structure includes a series of one-way valves, safety valves, and quenching apparatus. The result is an apparatus which comprises the complete assembly for converting a standard car engine from petrol (or other fuels) to use a hydrogen/gas mixture.

OBJECTS

It is accordingly a principal object of the present invention to provide a combustion system of gasses combined from a source of hydrogen and non-combustible gasses.

Another object of the invention is to provide such a combustion system that intermixes the hydrogen and non-combustible gasses in a controlled manner and thereby control the combustion temperature.

A further object of the invention is to provide such a combustion system that controls the fuel flow to the combustion chamber in s system and apparatus particularly adapted to hydrogen gas.

Still other objects and features of the present invention will become apparent from the following detailed description when taken in conjunction with the drawings in which:

BRIEF DESCRIPTION OF THE DRAWINGS

Fig.1 is a mechanical schematic illustration partly in block form of the present invention in its most preferred embodiment.

FIG. 1

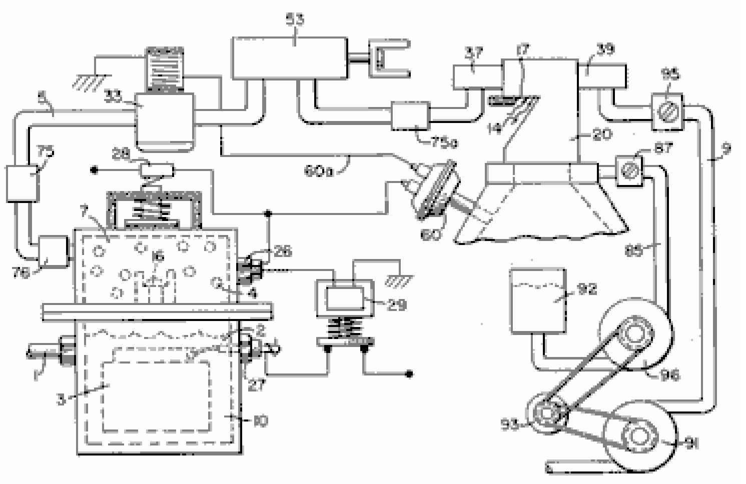

Fig.2 is a block schematic illustration of the preferred embodiment of the hydrogen injector system shown in Fig.1.

FIG. 2.

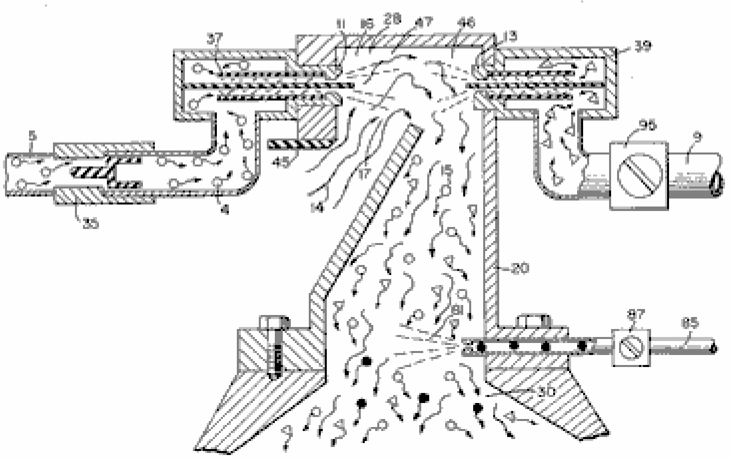

Fig.3 is the fine linear fuel flow control shown in Fig.1.

FIG. 3.

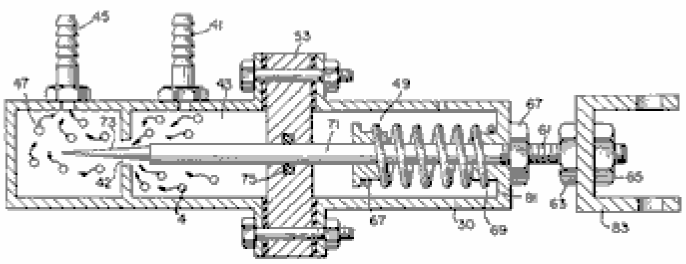

Fig.4 is cross-sectional illustration of the complete fuel injector system in an car utilising the concepts of the present invention.

FIG. 4.

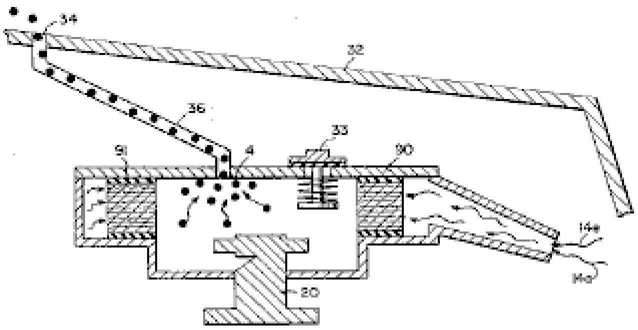

Fig.5 is a schematic drawing in a top view of the fuel injector system utilised in the preferred embodiment.

FIG. 5.

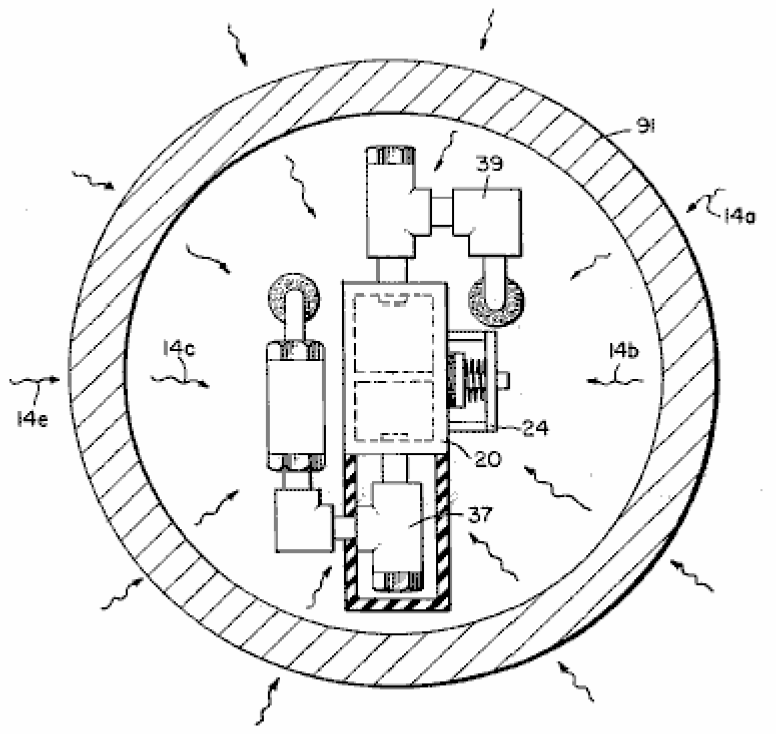

Fig.6 is a cross-sectional side view of the fuel injector system in the present invention.

FIG. 6.

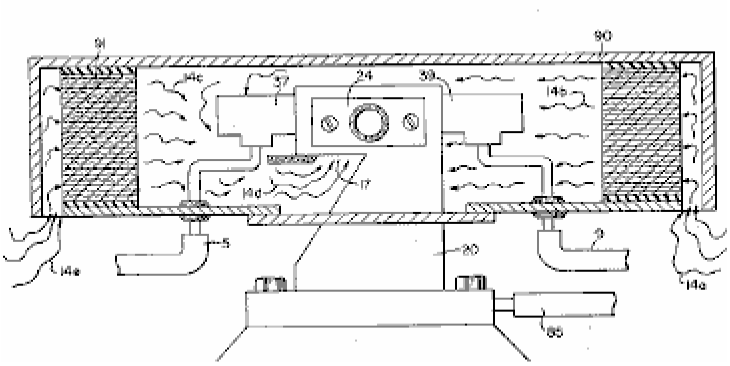

Fig.7 is a side view of the fuel mixing chamber.

FIG. 7.

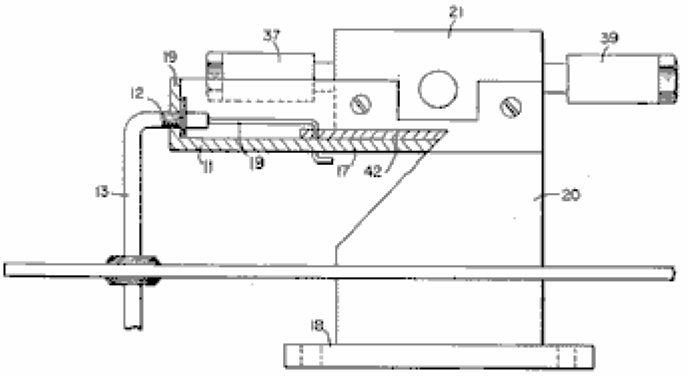

Fig.8 is a top view of the air intake valve to fuel mixing chamber.

FIG. 8.

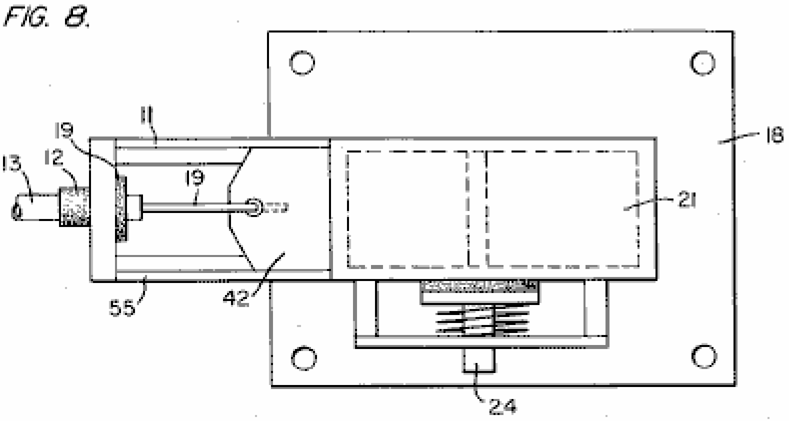

Fig.9 is a comparison of the burning velocity of hydrogen with respect to other fuels.

FIG 9

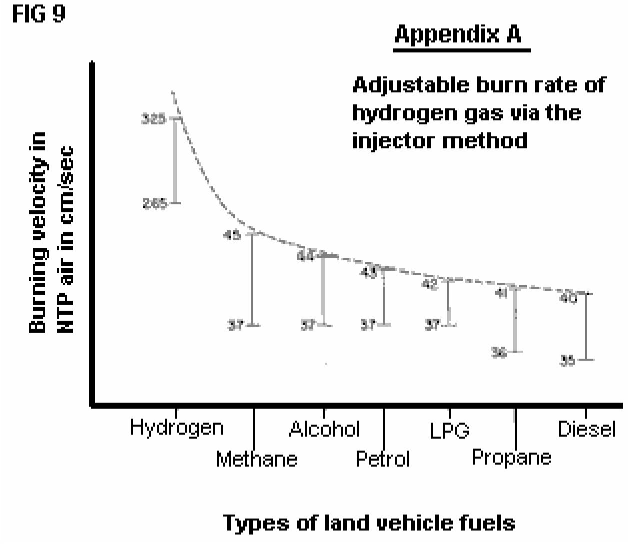

DETAILED DESCRIPTION OF INVENTION TAKEN WITH DRAWINGS:

FIG. 1

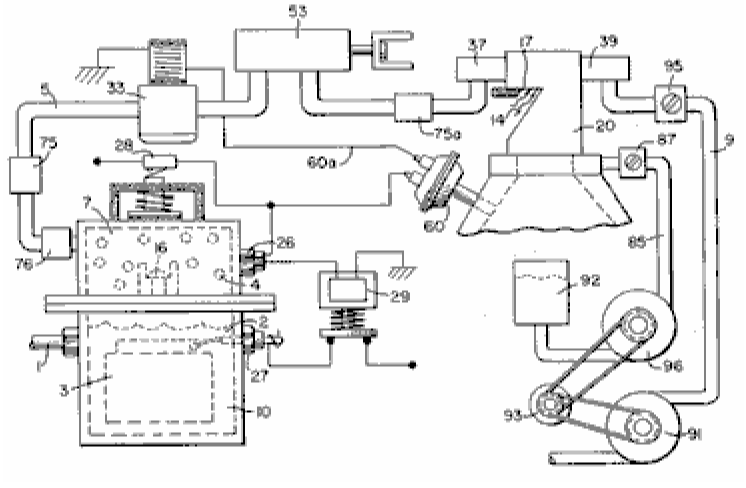

Referring to **Fig.1** the complete overall gas mixing and fuel flow system is illustrated together for utilisation in a combustion engine, particularly an engine in a car. With specific reference to **Fig.1**, the hydrogen source **10** is the hydrogen generator disclosed and described in my co-pending application, supra. The container **10** is an enclosure for a water bath **2**. Immersed in the water **2** is an array of plates **3** as further described in my co-pending application, supra. Applied to plates **3** is a source of direct current potential via electrical inlet **27**. The upper portion **7** of the container **10** is a hydrogen storage area maintaining a predetermined amount of pressure. In this way, there will be an immediate flow of hydrogen gas at start-up.

To replenish the expended water, the generator provides a continuous water source **1**. Thereafter, the generator is operable as described in the aforesaid patent application. The safety valve **28** is designed to rupture should there be an excessive build-up of gas. Switch **26** is a gas-pressure switch included to maintain a predetermined gas pressure level about a regulated low-volume.

The generated hydrogen gas **4** is fed from the one-way check valve **16** via pipe **5** to a gas-mixing chamber **20**, where the hydrogen gas is mixed with non-combustible gasses via pipe **9** from a source described later.

If the one-way valve **75** failed, there could be a return spark which could ignite the hydrogen gas **4** in the storage area **7** of the hydrogen generator **10**. To prevent this, the quenching assembly **76** has been included to prevent just such an ignition.

FIG. 2.

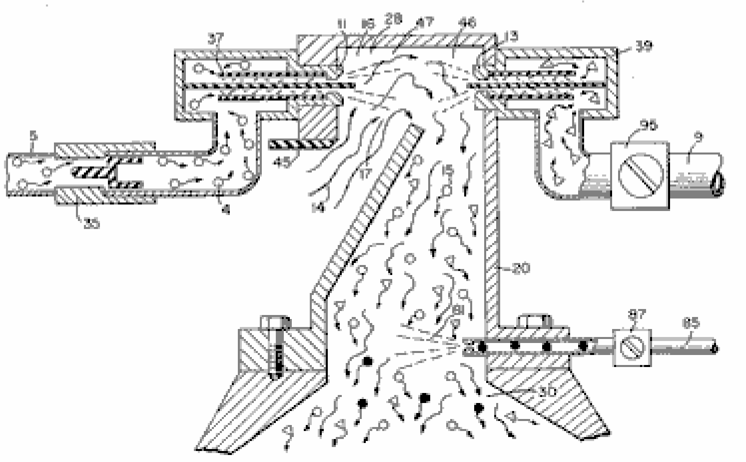

With particular reference to **Fig.2,** the hydrogen gas (via pipe **5**) and non-combustible gasses (via pipe **9**), are fed to a carburettor (air-mixture) system **20** also having an air intake **14** for ambient air.

The hydrogen gas **4** is fed via line **5** through nozzle **11** in a spray **16** in to the trap area **46** of the mixing chamber **20**. Nozzle **11** has an opening smaller than the plate openings in the quenching assembly **37**, thereby preventing flash-back in the event of sparking. The non-volatile gasses are injected into mixing chamber **20** trap area **47** in a jet spray **17** via nozzle **13**. Quenching assembly **39** is operable much in the same manner as quenching assembly **37**.

In the preferred arrangement, the ambient air is the source of oxygen necessary for the combustion of the hydrogen gas. Further, as disclosed in the aforesaid co-pending application, the non-volatile gasses are in fact, the exhaust gasses passed back via a closed loop system. It is to be understood that the oxygen and/or the non-combustible gasses might also be provided from an independent source.

With continued reference to **Fig.2** the gas trap area **47** is a predetermined size. As hydrogen is lighter than air, the hydrogen will rise and become trapped in area **47**. Area **47** is large enough to contain enough hydrogen gas to allow instant ignition upon the subsequent start-up of the combustion engine.

It will be noted that the hydrogen gas is injected in the uppermost region of the trap area **47**. Hydrogen rises at a much greater rate than oxygen or the non-combustible gasses; perhaps three times or greater. Therefore, if the hydrogen gas entered the trap area **47** (mixing area) at its lowermost region the hydrogen gas would rise so rapidly that the air could not mix with the oxygen. With the trap area **47** shown in **Fig.2**, the hydrogen is forced downwards into the air intake **15**. That is, the hydrogen gas is forced downwards into the upwardly forced air and this causes adequate mixing of the gasses.

The ratio of the ambient air (oxygen) **14** and the non-combustible gas via line **9** is a controlled ratio which is tailored to the particular engine. Once the proper combustion rate has been determined by the adjustment of valve **95** (for varying the amount of the non-combustible gas) and the adjustment of valve **45** (for varying the amount of the ambient air), the ratio is maintained thereafter.

In a system where the non-combustible gasses are the exhaust gasses of the engine itself, passed back through a closed loop-arrangement, and where the air intake is controlled by the engine, the flow velocity and hence the air/non-combustible mixture, is maintained by the acceleration of the engine.

The mixture of air with non-combustible gasses becomes the carrier for the hydrogen gas. That is, the hydrogen gas is mixed with the air/non-combustible gas mixture. By varying the amount of hydrogen gas added to the air/non-combustible mixture, the engine speed is controlled.

FIG. 3.

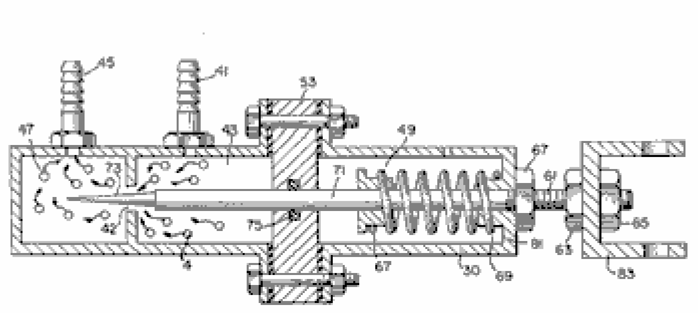

Reference is made to **Fig.3** which shows in a side view cross-section, the fine linear fuel flow control **53**. The hydrogen gas **4** enters chamber **43** via gas inlet **41**. The hydrogen gas passes from chamber **43** to chamber **47** via port or opening **42**. The amount of gas passing form chamber **43** to chamber **47** is dictated by the setting of the port opening **42**.

The port opening is controlled by inserting the linearly tapered pin **73** into it. The blunt end of pin **73** is fixed to rod **71**. Rod **71** is passed, (via supporting O-ring **75**), through opening **81** in housing **30**, to the manual adjustment mechanism **83**.

Spring **49** retains the rod **71** in a fixed position relative to pin **73** and opening **42**. When mechanism **83** is operated, pin **73** moves back from the opening **42**. As pin **73** is tapered, this backward movement increases the free area of opening **42**, thereby increasing the amount of gas passing from chamber **43** to chamber **47**.

The stops **67** and **69** maintain spring **49** in its stable position. The nuts **63** and **67** on threaded rod **61** are used to set the minimum open area of opening **42** by the correct positioning of pin **73**. This minimum opening setting, controls the idle speed of the engine, so pin **73** is locked in its correct position by nuts **63** and **67**. This adjustment controls the minimum rate of gas flow from chamber **43** to chamber **47** which will allow continuous operation of the combustion engine.

Referring now to **Fig.8** which illustrates the air adjustment control for manipulating the amount of air passing into the mixing chamber **20**. The closure **21** mounted on plate **18** has an opening **17** on end **11**. A plate-control **42** is mounted so as to slide over opening **17**. The position of this plate, relative to opening **17**, is controlled by the position of the control rod **19** which passes through grommet **12** to control line **13**. Release valve **24** is designed to rupture should any malfunction occur which causes the combustion of the gasses in mixing chamber **20**.

FIG. 4.

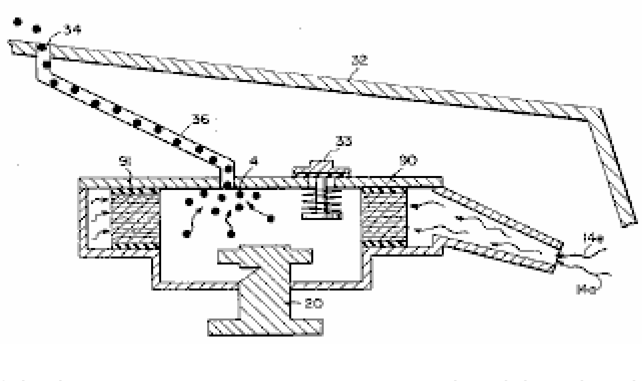

With reference now to **Fig.4**, if hydrogen gas **4** were to accumulate in mixing chamber **20** and reach an excessive pressure, the escape tube **36** which is connected to port **34** (located on the car bonnet **32**), permits the excess hydrogen gas to escape safely to the atmosphere. In the event of a malfunction which causes the combustion of the gasses in mixing chamber **20**, the pressure relief valve **33** will rupture, expelling the hydrogen gas without combustion.

In the constructed arrangement of **Fig.1**, there is illustrated a gas control system which may be fitted to an existing car's internal combustion engine without changing or modifying the car's design parameters or characteristics. The flow of the volatile hydrogen gas is, of course, critical; therefore, there is incorporated in line **5** a gas-flow valve **53**, and this is used to adjust the hydrogen flow. This gas-flow valve is shown in detail in **Fig.3**.

FIG. 8.

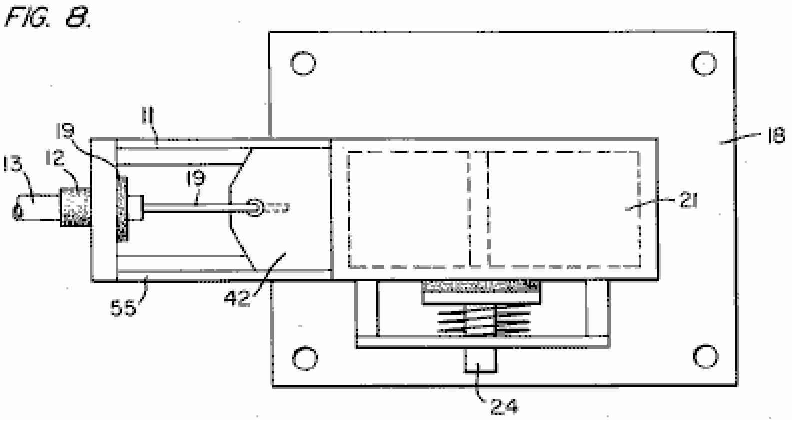

The intake air **14** may be in a carburettor arrangement with an intake adjustment **55** which adjusts the plate **42** opening. This is shown more fully in **Fig.8**. To maintain constant pressure in hydrogen gas storage **7** in the on-off operation of the engine, the gas flow control valve is responsive to the electrical shut-off control **33**. The constant pressure permits an abundant supply of gas on start-up and during certain periods of running time in re-supply.

The switch **33** is in turn responsive to the vacuum control switch **60**. During running of the engine vacuum will be built up which in turn leaves switch **33** open by contact with vacuum switch **60** through lead **60a**. When the engine is not running the vacuum will decrease to zero and through switch **60** will cause electrical switch **33** to shut off cutting off the flow of hydrogen gas to the control valve **53**.

As low-voltage direct current is applied to safety valve **28**, solenoid **29** is activated. The solenoid applies a control voltage to the hydrogen generator exciter **3** via terminal **27** through pressure switch **26**. As the electrical power activates solenoid **29**, hydrogen gas is caused to pass through flow adjustment valve **16** and then outlet pipe **5** for utilisation. The pressure differential hydrogen gas output to gas mixing chamber **20** is for example 30 lbs. to 15 lbs. Once hydrogen generator **10** reaches an optimum gas pressure level, pressure switch **26** shuts off the electrical power to the hydrogen excitors. If the chamber pressure exceeds a predetermined level, the safety release valve **28** is activated disconnecting the electrical current and thereby shutting down the entire system for safety inspection.

FIG. 6.

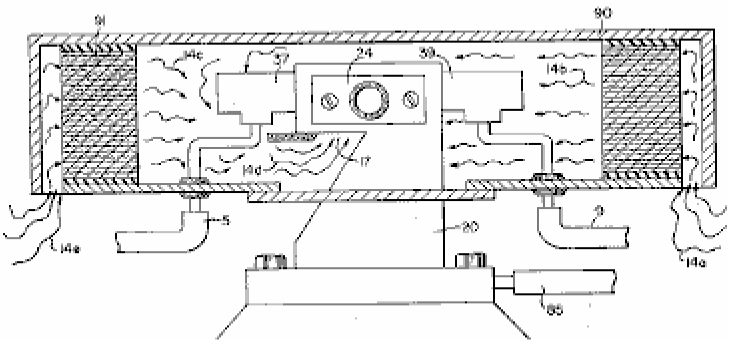

With particular reference now to **Fig.6** which illustrates the fuel injector system in a side cross-sectional view and to **Fig.5** the top view. The structural apparatus incorporated in the preferred embodiment comprises housing **90** which has air intakes **14a** and **14e**. The air passes through filter **91** around the components **14b** and **14c** and then to intake **14d** of the mixing chamber **20**. The hydrogen enters via line **5** via quenching plates **37** and into the mixing chamber **20**. The non-volatile gasses pass via line **9** to the quenching plates **39** and into the mixing chamber **20**.

FIG. 7

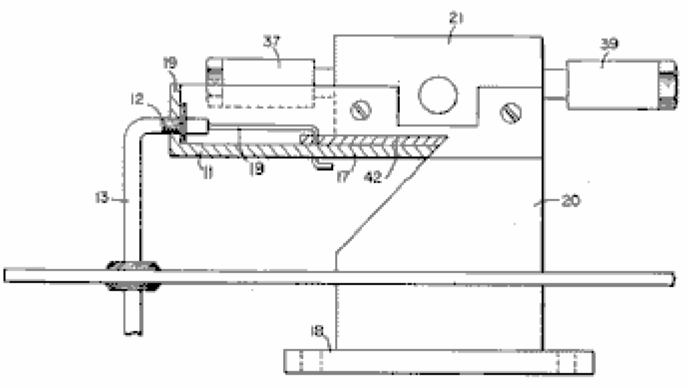

Fig.7 illustrates the mechanical arrangement of the components which make up the overall structure of mixing chamber **20** (shown independently in the other figures).

FIG. 1

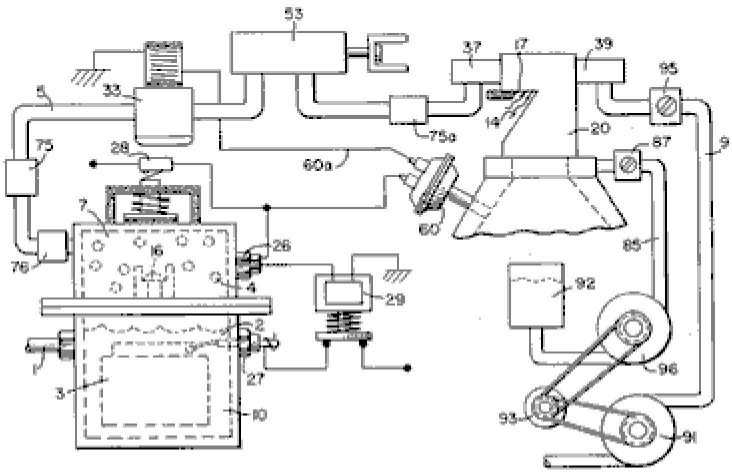

Returning to **Fig.1** there is illustrated the non-volatile gas line **9** passing through mixture pump **91** by engine pulley **93**. Valve **95** controls the rate of flow. Also driven by pulley **93** is pump **96** having line **85** connected to an oil reservoir **92** and valve **87** and finally to mixing chamber **20**. As a practical matter, such as in a non-oil lubricated engine, lubricating fluid such as oil **81** is sprayed in the chamber **20**, via oil supply line **85** for lubrication.

There have been several publications in the past year or so, delving into the properties of Hydrogen gas, its potential use, generating systems, and safety. One such publication is "Selected Properties of Hydrogen" (Engineering Design Data) issued February 1981 by the National Bureau of Standards.

These publications are primarily concerned with the elaborate and costly processes for generating hydrogen. Equally so, they are concerned with the very limited use of hydrogen gas because of its extremely high burning velocities. This in turn reflects the danger in the practical use of hydrogen.

With reference to the graph of the Appendix A, it is seen that the burning velocities of alcohol, propane, methane, petrol, Liquid Petroleum Gas, and diesel oil are in the range of minimum 35 to maximum 45. Further, the graph illustrates that the burning velocity of hydrogen gas is in the range of 265 minimum to 325 maximum. In simple terms, the burning velocity of hydrogen is of the order of 7.5 times the burning velocity of ordinary commercial fuels.

Because of the unusually high burning velocity of hydrogen gas, it has been ruled out as a substitute fuel, by these prior investigators. Further, even if an engine could be designed to accommodate such high burning velocities, the danger of explosion would eliminate any thoughts of commercial use.

The present invention, as above described, has resolved the above-noted criteria for the use of hydrogen gas in a standard commercial engine. Primarily, the cost in the generation of hydrogen gas, as noted in the aforementioned co-pending patent applications, is minimal. Water with no chemicals or metals is used. Also, as noted in the aforementioned co-pending patent applications, the reduction in the hydrogen gas burn velocity has been achieved. These co-pending applications not only teach the reduction in velocity, but teach the control of the velocity of the hydrogen gas.

In the preferred embodiment, practical apparatus adapting the hydrogen generator to a combustion engine is described. The apparatus linearly controls the hydrogen gas flow to a mixing chamber mixing with a controlled amount of non-combustible gas oxygen, hence, the reduction in the hydrogen gas velocity. The reduction in the hydrogen gas velocity makes the use of hydrogen as safe as other fuels.

In more practical terms the ordinary internal combustion engine of any size or type of fuel, is retrofitted to be operable with only water as a fuel source. Hydrogen gas is generated from the water without the use of chemicals or metals and at a very low voltage. The burning velocity of the hydrogen gas has been reduced to that of conventional fuels. Finally, every component or step in the process has one or more safety valves or features thereby making the hydrogen gas system safer than that of conventional cars.

In the above description the terms ‘non-volatile’ and ‘non-combustible’ were used. It is to be understood they are intended to be the same; that is, simply, gas which will not burn.

Again, the term ‘storage’ has been used, primarily with respect to the hydrogen storage area 7. It is not intended that the term ‘storage’ be taken literally - in fact, it is not storage, but a temporary holding area. With respect to area 7, this area retains a sufficient amount of hydrogen for immediate start-up.

Other terms, features, apparatus, and the such have been described with reference to a preferred embodiment. It is to be understood modifications and alternatives can be had without departing from the spirit and scope of the invention.

STANLEY MEYER

US Patent 4,421,474 December 1983 Inventor: Stanley A. Meyer

HYDROGEN GAS BURNER

Please note that this is a re-worded excerpt from this patent. It describes how to burn the hydrogen and oxygen gas mix produced by electrolysis of water. Normally, the flame produced is too hot for practical use other than cutting metal or welding. This patent shows a method of reducing the flame temperature to levels suitable for general use in boilers, stoves, heaters, etc.

ABSTRACT

A hydrogen gas burner for the mixture of hydrogen gas with ambient air and non-combustible gasses. The mixture of gasses when ignited provides a flame of extremely high, but controlled intensity and temperature.

The structure comprises a housing and a hydrogen gas inlet directed to a combustion chamber positioned within the housing. Air intake ports are provided for adding ambient air to the combustion chamber for ignition of the hydrogen gas by an ignitor therein. At the other end of the housing there is positioned adjacent to the outlet of the burner (flame) a barrier/heating element. The heating element uniformly disperses the flame and in turn absorbs the heat. The opposite side to the flame, the heating element uniformly disperses the extremely hot air. A non-combustible gas trap adjacent to the heating element captures a small portion of the non-combustible gas (burned air). A return line from the trap returns the captured non-combustible gas in a controlled ratio to the burning chamber for mixture with the hydrogen gas and the ambient air.

CROSS REFERENCE

The hydrogen/oxygen generator utilised in the present invention is that disclosed and claimed in my co-pending patent application, Serial. No.: 302,807, filed: Sept. 16, 1981, for: HYDROGEN GENERATOR SYSTEM. In that process for separating hydrogen and oxygen atoms from water having impurities, the water is passed between two plates of similar non-oxidising metal. No electrolyte is added to the water. The one plate has placed thereon a positive potential and the other a negative potential from a very low amperage direct-current power source. The sub-atomic action of the direct current voltage on the non-electrolytic water causes the hydrogen and oxygen atoms to be separated--and similarly other gasses entrapped in the water such as nitrogen. The contaminants in the water that are not released are forced to disassociate themselves and may be collected or utilised and disposed of in a known manner.

The direct current acts as a static force on the water molecules; whereas the non-regulated rippling direct current acts as a dynamic force. Pulsating the direct current further enhances the release of the hydrogen and oxygen atoms from the water molecules.

In my co-pending patent application, Serial. No. 262,744, filed: May 11, 1981, for: HYDROGEN AERATION PROCESSOR, there is disclosed and claimed the utilisation of the hydrogen/oxygen gas generator. In that system, the burn rate of the hydrogen gas is controlled by the controlled addition of non-combustible gasses to the mixture of hydrogen and oxygen gasses.

SUMMARY OF INVENTION

The present invention is for a hydrogen gas burner and comprises a combustion chamber for the mixture of hydrogen gas, ambient air, and non-combustible gasses. The mixture of gasses is ignited and burns at a retarded velocity rate and temperature from that of hydrogen gas, but at a higher temperature rate than other gasses.

The extremely narrow hydrogen gas mixture flame of very high temperature is restricted from the utilisation means by a heat absorbing barrier. The flame strikes the barrier which in turn disperses the flame and absorbs the heat therefrom and thereafter radiates the heat as extremely hot air into the utilisation means.

Positioned on the opposite side of the heat radiator/barrier is a hot air trap. A small portion of the radiated heat is captured and returned to the combustion chamber as non-combustible gasses. Valve means in the return line regulates the return of the non-combustible gas in a controlled amount to control the mixture.

The present invention is principally intended for use with the hydrogen generator of my co-pending patent application, supra; but it is not to be so limited and may be utilised with any other source of hydrogen gas.

OBJECTS

It is accordingly a principal object of the present application to provide a hydrogen gas burner that has a temperature controlled flame and a heat radiator/barrier.

Another object of the present invention is to provide a hydrogen gas burner that is capable of utilising the heat from a confined high temperature flame.

Another object of the present invention is to provide a hydrogen gas burner that is retarded from that of hydrogen gas, but above that of other gasses.

Another object of the present invention is to provide a hydrogen gas burner that utilises the exhaust air as non-combustible gas for mixture with the hydrogen gas.

Another object of the present invention is to provide a hydrogen gas burner that is simple but rugged and most importantly safe for all intended purposes.

Other objects and features of the present invention will become apparent from the following detailed description when taken in conjunction with the drawings in which:

BRIEF DESCRIPTION OF THE DRAWINGS

Fig.1 is an overall cross-sectional view of the present invention in its most preferred embodiment.

Fig. 1

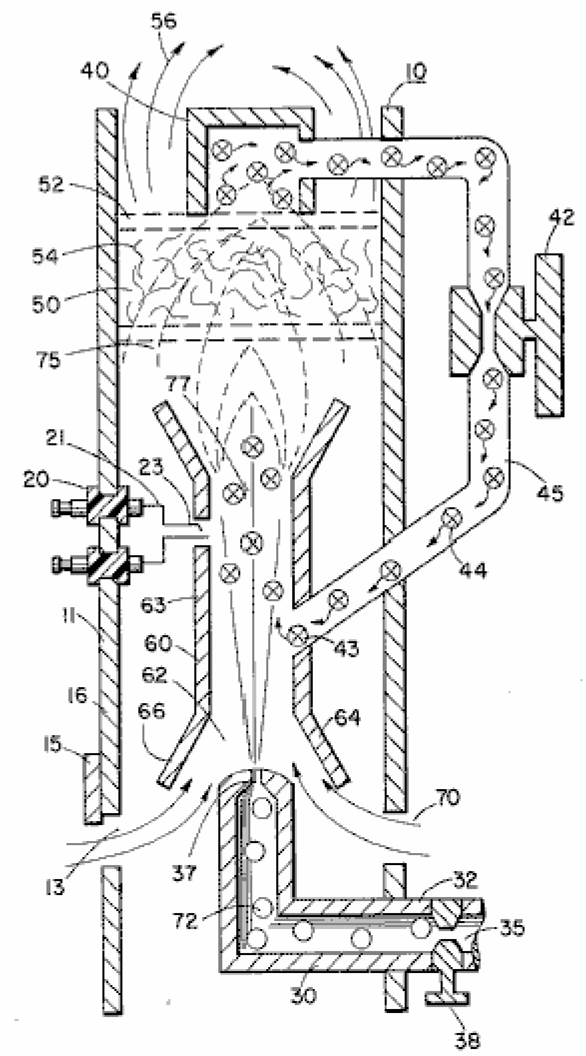

Fig.2 is a graphical illustration of the burning of various standard fuels with that of hydrogen velocities.

Fig. 2

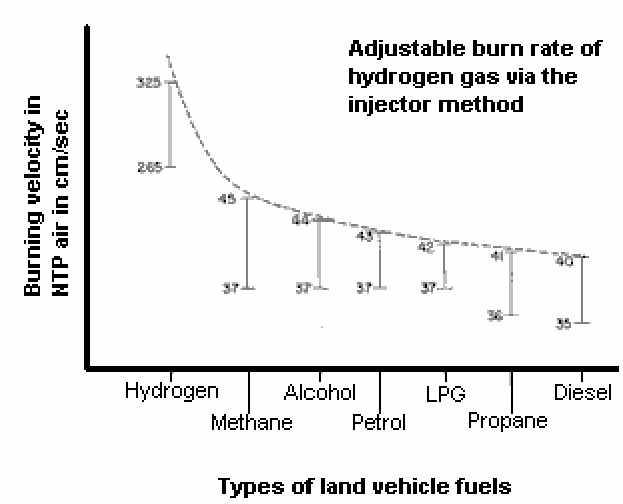

DETAILED DESCRIPTION OF INVENTION

Fig. 1

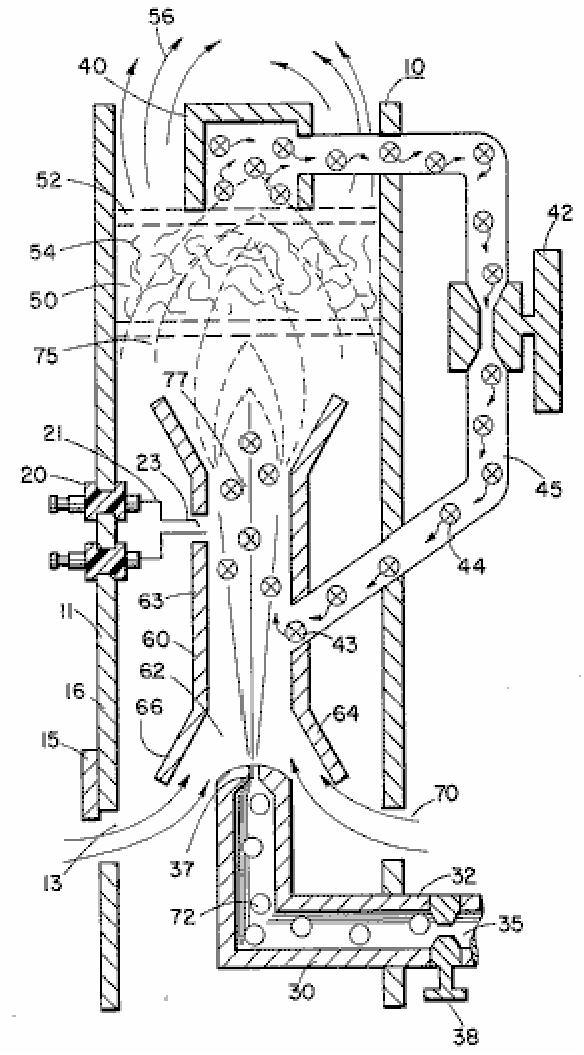

With particular reference **Fig.1** there is illustrated in a schematic cross-section the principals of the present invention. The structure of the preferred embodiment comprises a housing **10**, having an igniter **20** extending through the wall **11** thereof. A combustion chamber **60** positioned within the housing **10** has a first open end **62**. A hydrogen gas **72** inlet **30** directs hydrogen gas via port **37** from a source **35** to the inlet **62** of the combustion chamber **68**. Also directed to the same inlet **62**, and assisted by flanges **64** and **66**, is ambient air **70** entering through ports **13** in the housing **10**.

Adjacent the opposite end of the combustion chamber **60** the gas mixture **75** is ignited by the ignitor **20** to produce flame **77**. The velocity of the flame **77** causes it to strike and penetrate the barrier/radiator **50**. The barrier **50** is of a material, such as metallic mesh or ceramic material, to disperse therein the flame and in turn become saturated with heat. The flame **77** is of a size sufficient to be dispersed throughout the barrier **50**, but yet, not penetrate through the barrier **50**.

Radiated from the surface **52** of the barrier **50** is superheated air **56** (gasses) to be passed on to a utilisation device. Adjacent to surface **52** of barrier/radiator **50** is a hot air trap **40** with closed loop line **45** returning non-combustible gas **44** to the combustion chamber **60**. Control valve **42** is intermediate the line **45**.

In operation of the preferred embodiment hydrogen gas, **72**, emitted from the nozzle **37** is directed to the combustion chamber **60**. The flanges **64** and **66** on the open end of housing **63** of the combustion chamber **60** enlarges the open end of **62**. In the enlargement ambient air from the opening **13** in the housing **10** is also directed to the combustion chamber **60**.

The ambient air and hydrogen traverses the opening **43** and further mixes with the non-combustible gas **44** from the closed loop line **45** with the hot air trap **40**. The mixture of hydrogen gas **72**, ambient air **70**, and non-combustible gas **44**, is ignited by the ignitor **20** having electrical electrodes **21** and **23**. Upon ignition flame **77** ensues. The mixture is controlled with each of three gasses. That is, the line **32** from the hydrogen source **35** has a valve **38** therein for controlling the amount of hydrogen **72** emitted from the nozzle **37**. The opening **13** has a plate adjustment **15** for controlling the amount of ambient air **60** directed to the combustion chamber **60**, and the closed-loop line has valve **42**, as aforesaid, for controlling the amount of non-combustible gasses in the mixture.

It can be appreciated that the temperature of the flame **77** and the velocity of the flame **77** is a function of the percentage of the various gasses in the mixture. In a practical embodiment, the flame **70** temperature and velocity was substantially retarded from that of a hydrogen flame per se; but yet, much greater than the temperature and velocity of the flame from the gasses utilised in a conventional heating system.

To maintain a sufficient pressure for combustion of the hydrogen gas mixture with a minimum of pressure (for safety) and to limit blow-out, the nozzle **37** opening **39** is extremely small. As a consequence, if the hydrogen gas were burned directly from the nozzle **37**, the flame would be finite in diameter. Further, its velocity would be so great it is questionable whether a flame could be sustained. The mixing of ambient air and non-combustible gas does enlarge the flame size and reduce its velocity. However, to maintain a flame higher in temperature and velocity than the conventional gasses, the size and temperature of the flame is controlled by the mixture mentioned earlier.

Therefore, to utilise the flame **77** in a present day utilisation means, the flame is barred by the barrier **50**. The barrier **50** is of a material that can absorb safely the intense flame **77** and thereafter radiate heat from its entire surface **52**. The material **54** can be a ceramic, metallic mesh or other heat absorbing material known in the art. The radiated heat **56** is directed to the utilisation means.

As stated earlier, the mixture of gasses which are burned include non-combustible gasses. As indicated in the above-noted co-pending patent applications, an excellent source of non-combustible gasses is exhaust gasses. In this embodiment, the trap **50** entraps the hot air **74** and returns the same, through valve **42**, to the combustion chamber **60** as non-combustible gas.

With reference to **Fig.2** there is illustrated the burning velocity of various standard fuels. It can be seen the common type of fuel burns at a velocity substantially less than hydrogen gas. The ratio of hydrogen with non-combustible oxygen gasses is varied to obtain optimum burning velocity and temperature for the particular utilisation. Once this is attained, the ratio, under normal conditions, will not be altered. Other uses having different fuel burn temperature and velocity will be adjusted in ratio of hydrogen/oxygen to non-combustible gasses in the same manner as exemplified above.

Further, perhaps due to the hydrogen gas velocity, there will occur unburned gas at the flame **77** output. The barrier **50**, because of its material makeup will retard the movement and trap the unburned hydrogen gas. As the superheated air **77** is dispersed within the material **54**, the unburned hydrogen gas is ignited and burns therein. In this way the barrier **50** performs somewhat in the nature of an after-burner.

STANLEY MEYER

US Patent 5,149,407 22nd September 1992 Inventor: Stanley Meyer

PROCESS AND APPARATUS FOR THE PRODUCTION OF FUEL GAS AND THE ENHANCED RELEASE OF THERMAL ENERGY FROM SUCH GAS

Please note that this is a re-worded excerpt from this patent. It describes in considerable detail, one of Stan's methods for splitting water into hydrogen and oxygen gasses and the subsequent methods for using those gasses.

ABSTRACT

Water molecules are broken down into hydrogen and oxygen gas atoms in a capacitive cell by a polarisation and resonance process dependent on the dielectric properties of water and water molecules. The gas atoms are then ionised or otherwise energised and thermally combusted to release a degree of energy greater than that of combustion of the gas in air.

OBJECTS OF THE INVENTION

A first object of the invention is to provide a fuel cell and a process in which molecules of water are broken down into hydrogen and oxygen gasses, and a fuel gas mixture comprised of hydrogen, oxygen and other gasses formerly dissolved in the water, is produced. A further object of the invention is to realise significant energy-yield from a fuel gas derived from water molecules. Molecules of water are broken down into hydrogen and oxygen gasses. Electrically charged hydrogen and oxygen ions of opposite electrical polarity are activated by electromagnetic wave energy and exposed to a high temperature thermal zone. Significant amounts of thermal energy with explosive force beyond the gas burning stage are released.

An explosive thermal energy under a controlled state is produced. The process and apparatus provide a heat energy source useful for power generation, aircraft rocket engines or space stations.

BRIEF DESCRIPTION OF THE DRAWINGS

Figs.1A through **1F** are illustrations depicting the theoretical bases for phenomena encountered during operation of the fuel gas production stage of the invention.

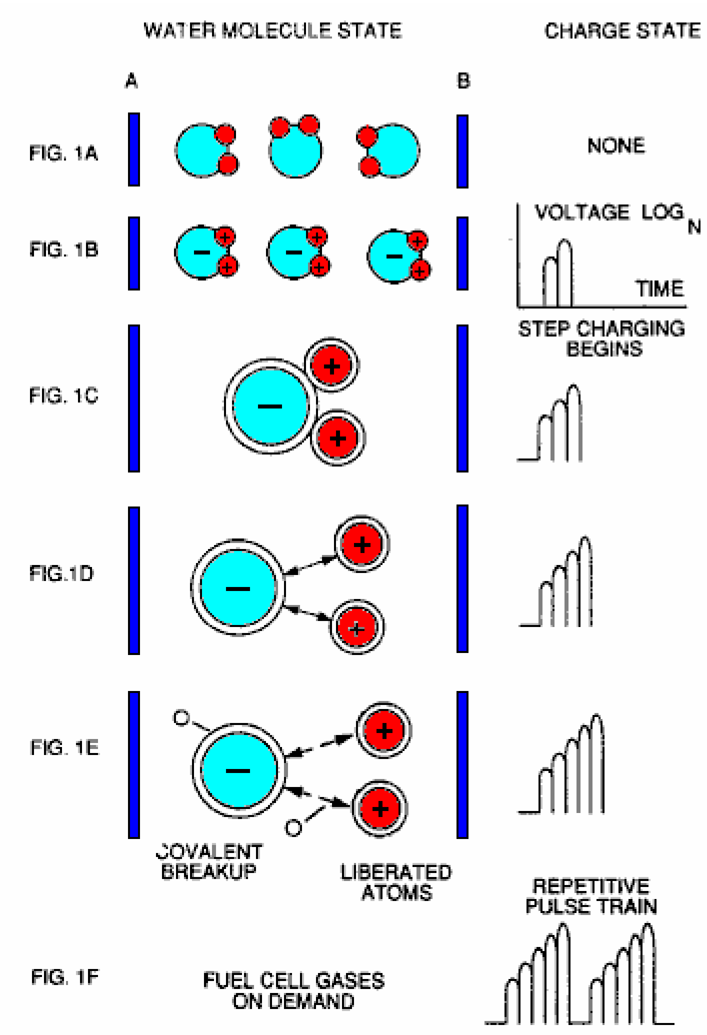

FIGURE 1

Fig.2 illustrates a circuit which is useful in the fuel gas generation process.

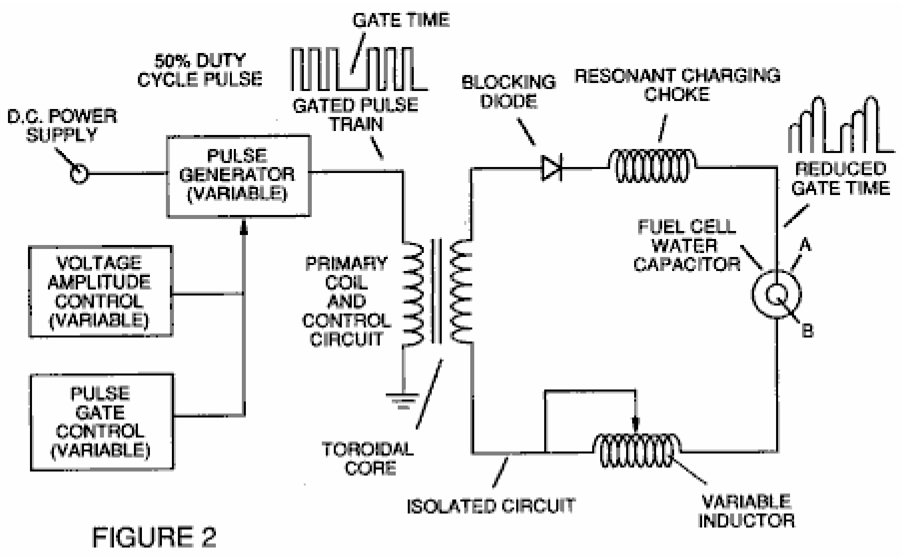

FIGURE 2

Fig.3 shows a perspective of a "water capacitor" element used in the fuel cell circuit.

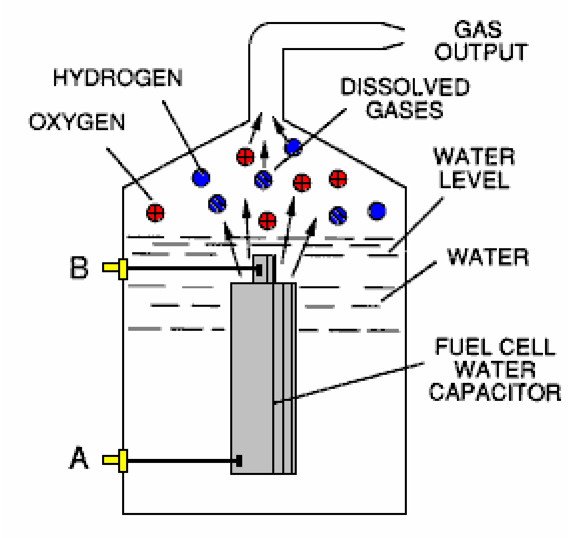

FIGURE 3

Fig.4 illustrates a staged arrangement of apparatus useful in the process, beginning with a water inlet and culminating in the production of thermal explosive energy.

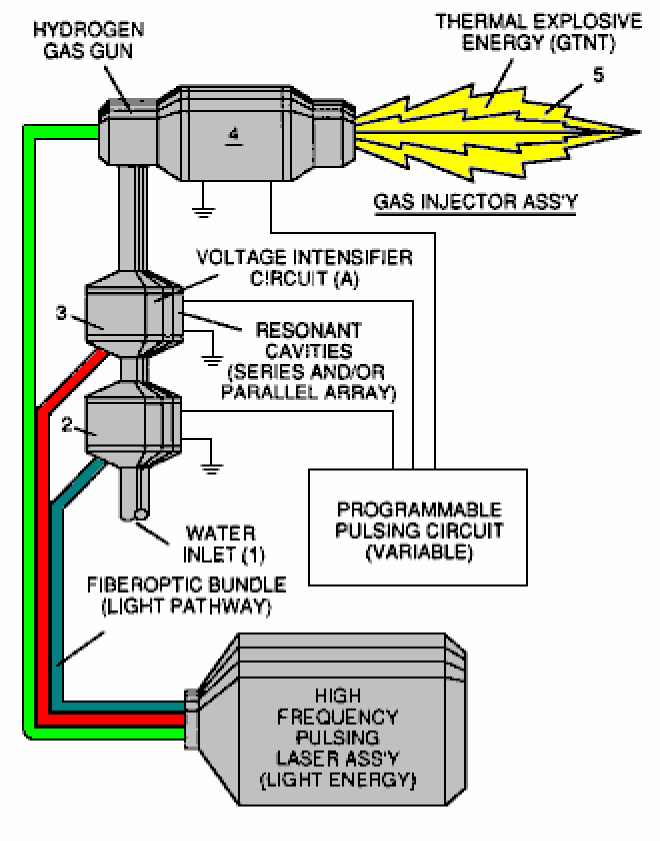

FIGURE 4

Fig.5A shows a cross-section of a circular gas resonant cavity used in the final stage assembly of **Fig.4**

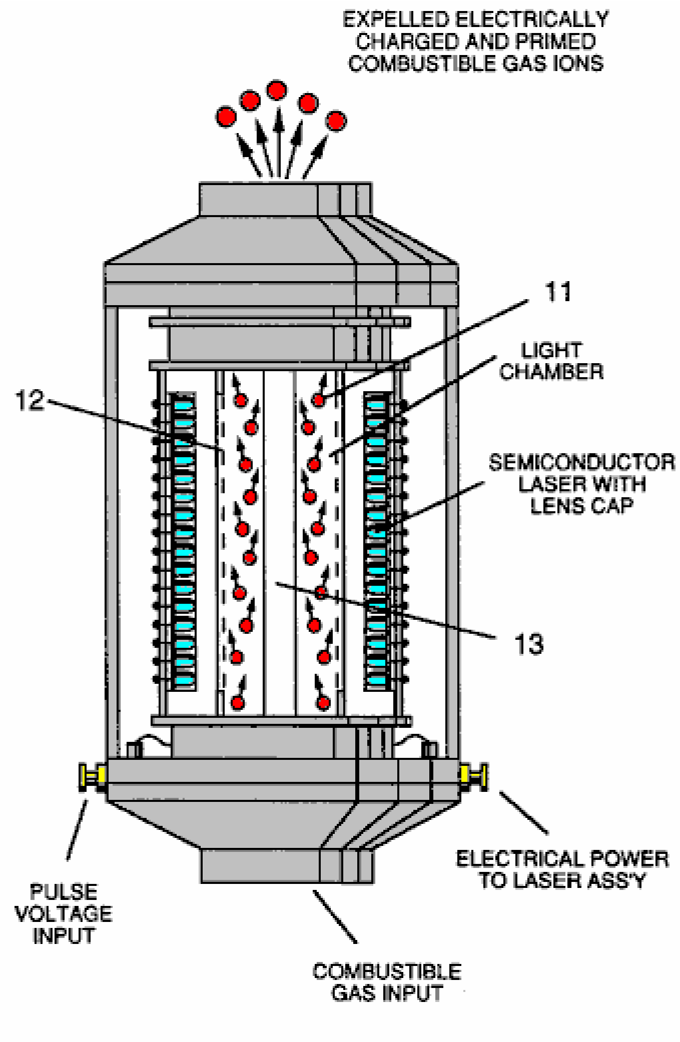

FIGURE 5A

Fig.5B shows an alternative final stage injection system useful in the apparatus of **Fig.4**

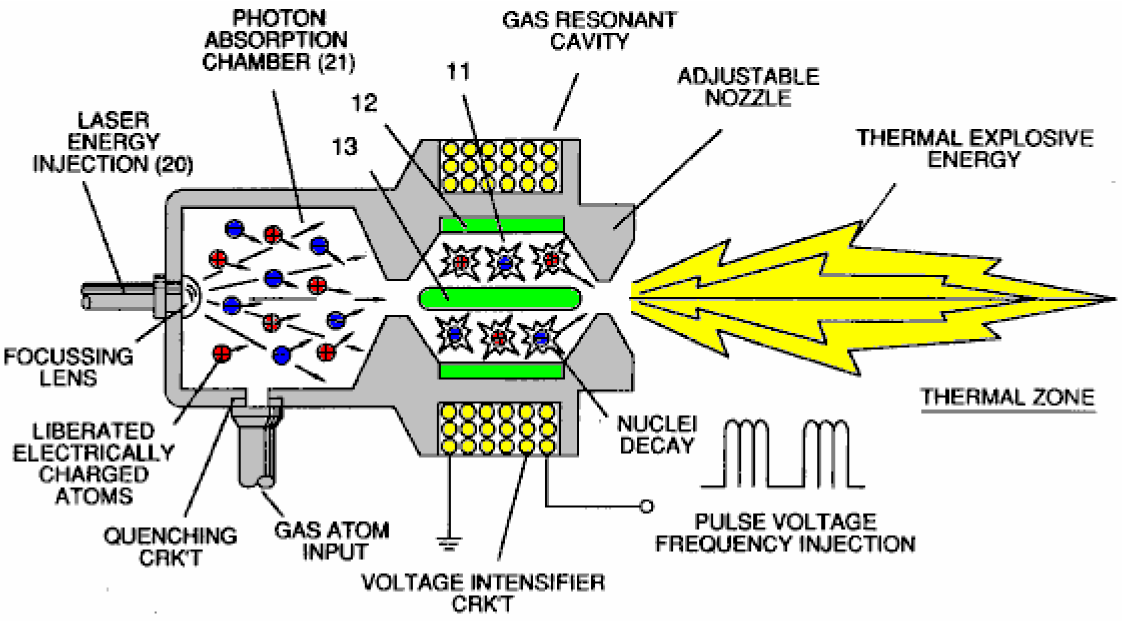

FIGURE 5B

Fig.5C shows an optical thermal lens assembly for use with either final stage of **Fig.5A** or **Fig.5B**.

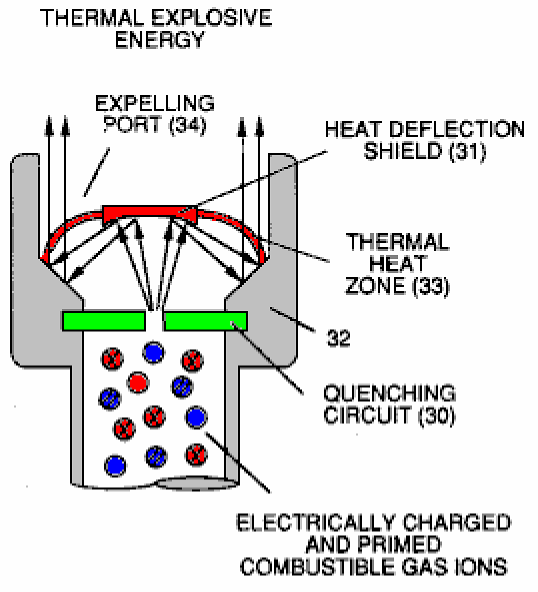

FIGURE 5C

Figs.6A, 6B, 6C and **6D** are illustrations depicting various theoretical bases for atomic phenomena expected to occur during operation of this invention.

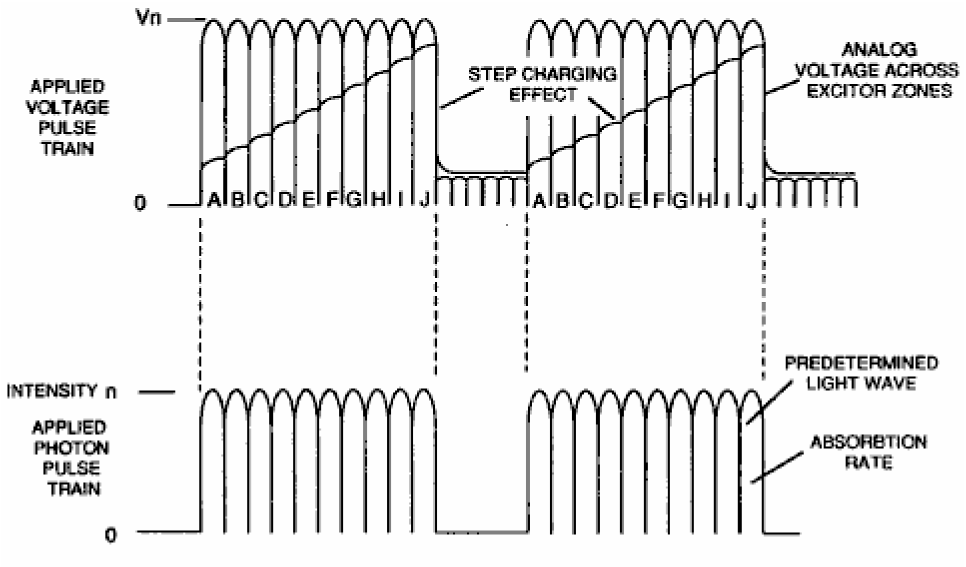

FIGURE 6A

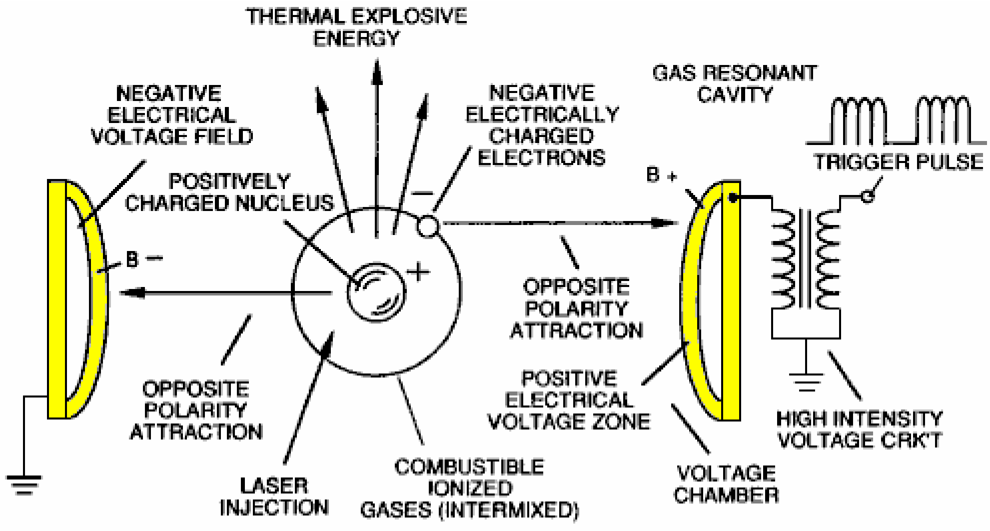

FIGURE 6B

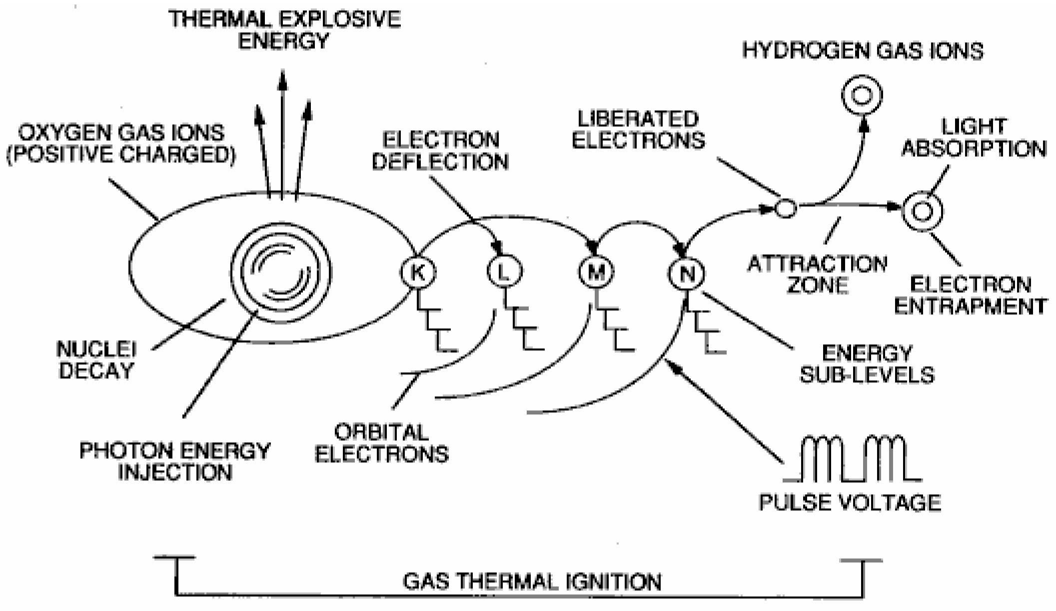

FIGURE 6C

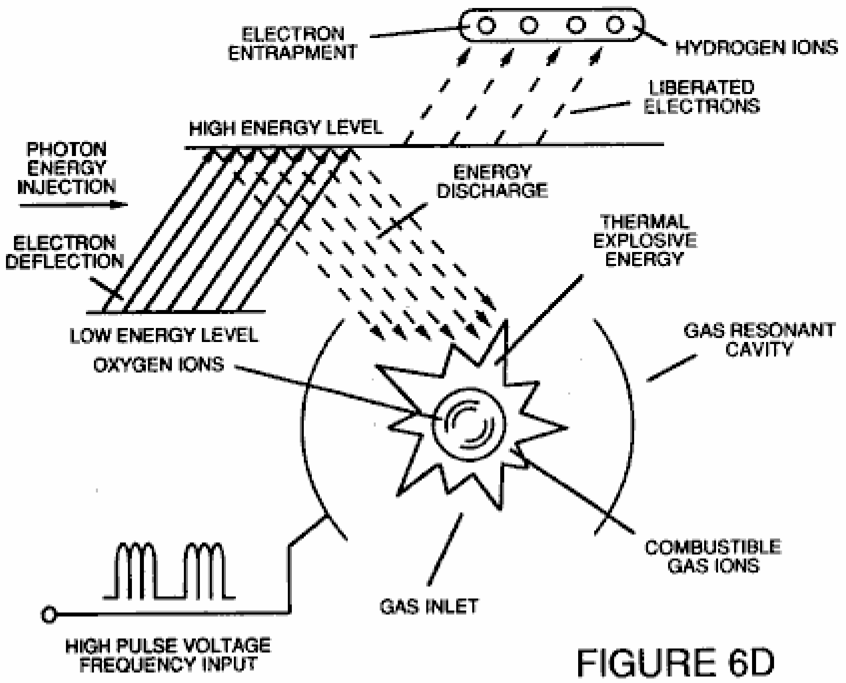

FIGURE 6D

Fig.7 is an electrical schematic of the voltage source for the gas resonant cavity.

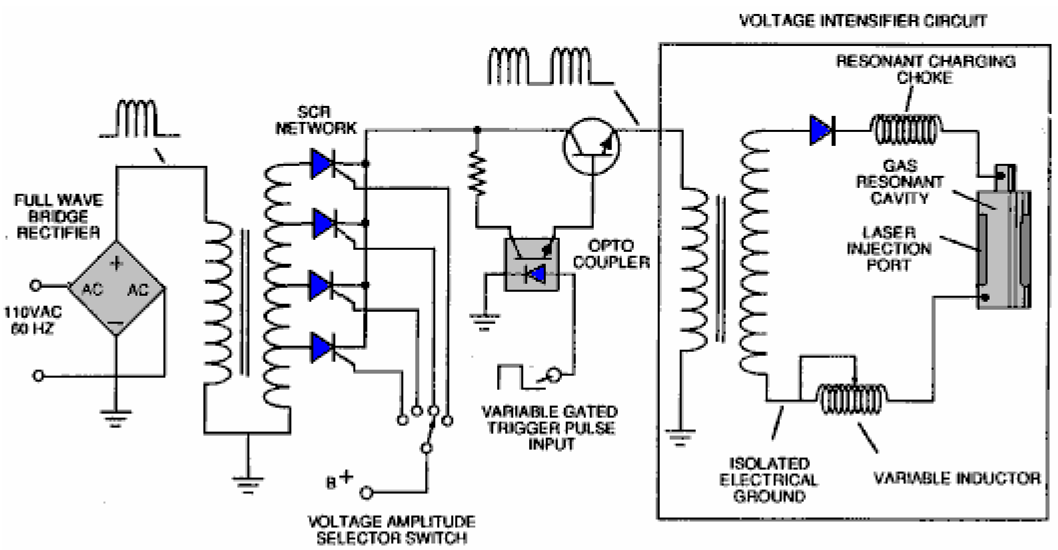

FIGURE 7

Figs.8A and **8B** respectively, show (A) an electron extractor grid used in the injector assemblies of **Fig.5A** and **Fig.5B**, and (B) the electronic control circuit for the extractor grid.

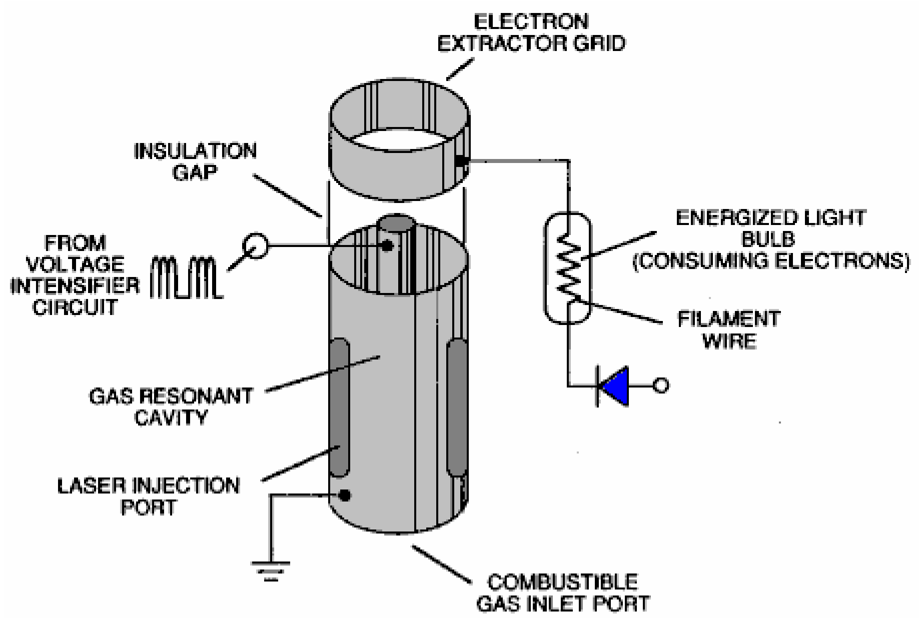

FIGURE 8A

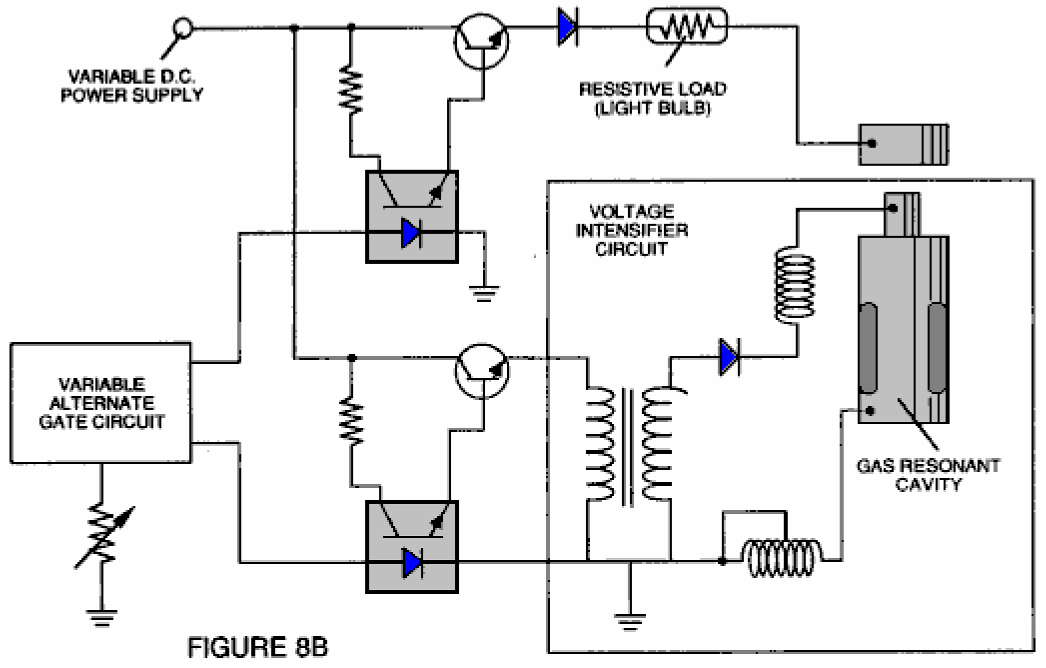

FIGURE 8B

Fig.9 shows an alternative electrical circuit useful in providing a pulsating waveform to the apparatus.

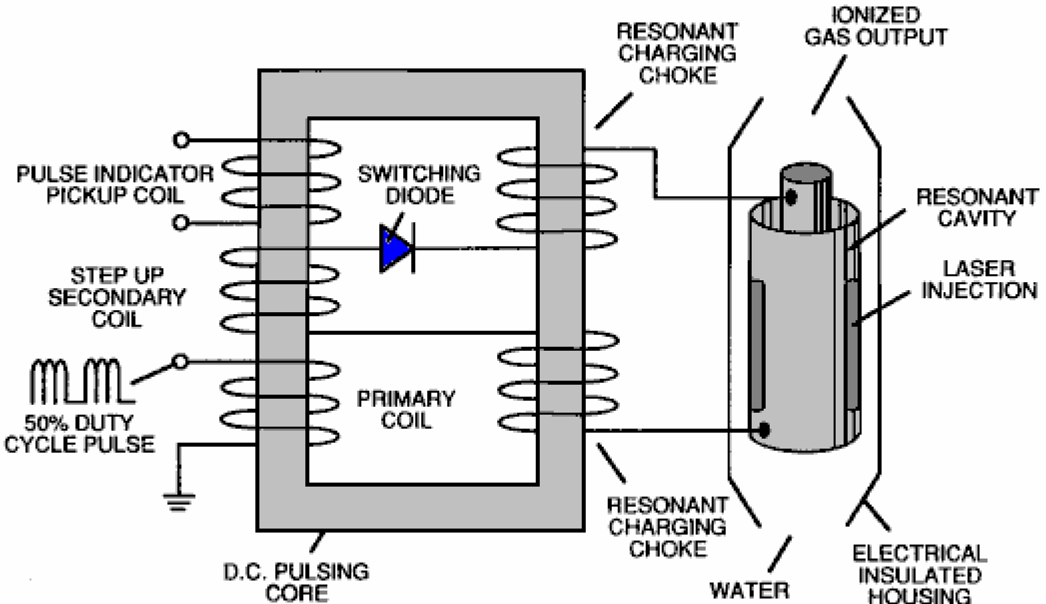

FIGURE 9

TABLE 1: PROCESS STEPS LEADING TO IGNITION

Relative State of Water Molecule and/or Hydrogen/Oxygen/Other Atoms	Stage
Random (ambient state) alignment of polar fields, polarisation of molecules. Molecular elongation. Atom liberation by breakdown of covalent bond	1st Stage: Water to Gas
Release of gasses, Liquid to gas ionisation, Electrical charging effect, Particle Impact	2nd Stage: Gas Ionisation
Electromagnetic Wave, Laser or photon injection, Electron extraction, Atomic destabilisation	3rd Stage: Priming
Thermal Ignition	Final Stage: Ignition

DESCRIPTION OF THE PREFERRED EMBODIMENT

A fuel gas is produced by a hydrogen fracturing process which follows the sequence of steps shown in Table 1. Beginning with water molecules, the molecule is subjected to successively increasing electrical wave energy and thermal forces. In the succession of forces, randomly orientated water molecules are aligned with respect to molecular polar orientation and themselves polarised and "elongated" by the application of an electric potential, to the extent that the co-valent bonding of the water molecules is so weakened that the atoms disassociate and the molecule breaks down into hydrogen and oxygen elemental components. Next, the released atomic gasses are ionised and electrically charged in a vessel while being subjected to a further energy source which promotes inter-particle impact in the gas at an increased overall energy level. Finally, the atomic particles in the excited gas, having achieved successively higher energy levels, are subjected to a laser or electromagnetic wave energy source which produces atomic destabilisation and the final release of thermal explosive energy.

Engineering design parameters based on known theoretical principles of atomic physics, determine the incremental levels of electrical and wave energy input required to produce resonance in each stage of the system. Instead of a dampening effect, a resonant energisation of the molecule, atom or ion provides a compounding energy interaction resulting in the final energy release.

In brief, in the first stage, a gas mixture including hydrogen, oxygen and other gasses formerly dissolved in the water, is obtained from water. In general, the method used in the first stage consists of:

(A) Providing a capacitor, in which the water is included as a dielectric liquid between capacitor plates, in a resonant charging choke circuit, which includes an inductor in series with the capacitor.

(B) Subjecting the capacitor to a pulsating, unipolar electric voltage field in which the polarity does not pass beyond an arbitrary ground, whereby the water molecules within the capacitor are subjected to a charge of the same polarity, and the water molecules are distended by the electrical polar forces.

(C) Further subjecting the water in the capacitor to the pulsating electric field to achieve a pulse frequency which induces a resonance within the water molecule.

(D) Continuing the application of the pulsing frequency to the capacitor cell after resonance occurs so that the energy level within the molecule is increased in cascading incremental steps in proportion to the number of pulses.

(E) Maintaining the charge of the capacitor during the application of the pulsating field, whereby the co-valent electrical bonding of the hydrogen and oxygen atoms within the water molecules is destabilised to such a degree that the force of the electrical field within the molecule exceeds the bonding force of the molecule, causing the molecule to break apart into the elemental gasses of hydrogen and oxygen.

(F) Collecting the hydrogen and oxygen gasses, along with any other gasses formerly dissolved in the water, and discharging the collected gasses as a fuel gas mixture.

The water molecules are subjected to increasing electrical forces. In an ambient state, randomly orientated water molecules are aligned with respect to a molecular polar orientation. Next, they themselves are polarised and "elongated" by the application of an electrical potential to the extent that co-valent bonding of the water molecules is so weakened that the atoms disassociate and the molecule breaks down into hydrogen and oxygen elemental components. In this process, the point of optimum gas release is reached when the circuit is at resonant frequency. Water in the cell is subjected to a pulsating, polar electric field produced by the electrical circuit, whereby the water molecules are distended by the electrical force on the plates of the capacitor. The polar pulsating frequency applied is such that the pulsating electric field induces a resonance in the molecules. A cascade effect occurs, and the overall energy of specific water molecules is increased in cascading incremental steps. The hydrogen and oxygen are released when the resonant energy exceeds the co-valent bonding force of the water molecules.

A preferred construction material for the capacitor plates is stainless steel T-304 which does not react chemically with water, hydrogen or oxygen. An electrically conductive material which is inert in the fluid environment, is a desirable material of construction for the electric field plates of the "water capacitor" employed in the circuit.

Once triggered, the gas output is controllable by the attenuation of operational parameters. Thus, once the frequency of resonance is identified, by varying the applied pulse voltage to the water fuel cell assembly, gas output is varied. By varying the pulse shape, pulse amplitude or pulse train sequence, the gas output can be varied. Attenuation of the voltage field's mark/space ratio of OFF/ON periods also affects the rate of gas production.

The overall apparatus thus includes and electrical circuit in which a water capacitor is an element. The water capacitor has a known dielectric property. The fuel gasses are obtained from the water by the disassociation of the water molecules. The water molecules are split into component atomic elements by a voltage stimulation process called the 'electrical Polarisation process' which also releases dissolved gasses trapped in the water.

From the outline of physical phenomena associated with the first stage of the process described in Table 1, the theoretical basis of the invention considers the respective states of molecules, gasses and ions derived from liquid water. Before voltage stimulation, water molecules are randomly dispersed throughout water in a container.

When a unipolar voltage pulse train such as that shown in **Figs.1B** through **1F** is applied to positive and negative capacitor plates, and increasing voltage potential is induced in the molecules in a linear, step-like charging effect. The electrical field of the particles within a volume of water including the electrical field plates, increases from a low energy state to a high energy state in a step manner following each pulse train as illustrated figuratively in **Figs.1A** through **1F**. The increasing voltage potential is always positive in direct relationship to negative ground potential during each pulse. The voltage polarity on the plates which create the voltage fields remains constant although the voltage charge increases. Positive and negative voltage "zones" are thus formed simultaneously in the electrical field of the capacitor plates.

In the first stage of the process described in Table 1, because the water molecule naturally exhibits opposite electrical fields in a relatively polar configuration (the two hydrogen atoms have a positive charge while the oxygen atom has a negative charge), the voltage pulse causes the water molecules which were initially orientated in random directions, to spin and align themselves with the electrical field applied to the cell. The positively charged hydrogen atoms are attracted to the negative field while the negatively charged oxygen atoms, of the same water molecule, are attracted to the positive voltage field. Even a slight potential difference between the plates of a containment chamber capacitor will initiate the alignment of each water molecule within the cell.

When the voltage applied to the plates causes the water molecules to align themselves, then the pulsing causes the voltage field intensity to be increased in accordance with **Fig.1B**. As further molecular alignment occurs, molecular movement is hindered. Because the positively charged hydrogen atoms of the aligned molecules are attracted in a direction opposite to the negatively charged oxygen atoms, a polar charge alignment or distribution occurs within the molecules between the voltage zones as shown in **Fig.1B**, and as the energy level of the atoms, subjected to resonant pulsing, increases, the stationary water molecules become elongated as shown in **Figs.1C** and **1D**. Electrically charged nuceli and electrons are attracted towards opposite electrically charged voltage zones - disrupting the mass and charge equilibrium of the water molecule.

As the water molecule is further exposed to an increasing potential difference resulting from the step charging of the capacitor, the electrical force of attraction of the atoms within the molecule to the capacitor plates of the chamber also increases in strength. As a result, the co-valent bonding between the atoms of the molecule is weakened and ultimately, terminated. The negatively charged electron is attracted toward the positively charged hydrogen atoms, while at the same time, the negatively charged oxygen atoms repel electrons.

In a more specific explanation of the "sub-atomic action which occurs in the water cell, it is known that natural water is a liquid which has a dielectric constant of 78.54 at 20 degrees Centigrade and 1 atmosphere of pressure [Handbook of Chemistry and Physics, Section E-50].

When a volume of water is isolated and electrically conductive plates that are chemically inert in water and which are separated by a distance, are immersed in the water, a capacitor is formed, having a capacitance determined by the surface area of the plates, the distance of their separation and the dielectric constant of the water.

When water molecules are exposed to voltage at a restricted current, water takes on an electrical charge. By the laws of electrical attraction, molecules align according to positive and negative polarity fields of the molecule and the alignment field. The plates of a capacitor constitute such an alignment field when a voltage is applied across them.

When a charge is applied to a capacitor, the electrical charge of the capacitor equals the applied voltage charge. In a water capacitor, the dielectric property of water resists the flow of current in the circuit, and the water molecule itself, because it has polarity fields formed by the relationship of hydrogen and oxygen in the co-valent bond, and an intrinsic dielectric property, becomes part of the electrical circuit, analogous to a "microcapacitor" within the capacitor defined by the plates.

In the Example of a fuel cell circuit of **Fig.2**, a water capacitor is included. The step-up coil is formed on a conventional torroidal core formed of a compressed ferromagnetic powered material that will not itself become permanently magnetised, such as the trademarked "Ferramic 06# 'Permag'" powder as described in *Siemens Ferrites Catalogue*, CG-2000-002-121, (Cleveland, Ohio) No. F626-1205. The core is 1.50 inch in diameter and 0.25 inch in thickness. A primary coil of 200 turns of 24 AWG gauge copper wire is provided and a coil of 600 turns of 36 AWG gauge wire comprises the secondary winding. Other primary/secondary coil winding ratios may be conveniently determined.

An alternate coil arrangement using a conventional M27 iron transformer core is shown in **Fig.9**. The coil wrap is always in one direction only.

In the circuit of **Fig.2**, the diode is a 1N1198 diode which acts as a blocking diode and an electric switch which allows current flow in one direction only. Thus, the capacitor is never subjected to a pulse of reverse polarity.

The primary coil of the torroid is subject to a 50% duty-cycle pulse. The torroidal pulsing coil provides a voltage step-up from the pulse generator in excess of five times, although the relative amount of step-up is determined by pre-selected criteria for a particular application. As the stepped-up pulse enters the first inductor (formed of 100 turns of 24 gauge wire, 1 inch in diameter), an electromagnetic field is formed around the inductor. Voltage is switched off when the pulse ends, and the field collapses and produces another pulse of the same polarity; i.e. another positive pulse is formed where the 50% duty-cycle was terminated. Thus, a double pulse frequency is produced; however, in a pulse train of unipolar pulses, there is a brief time when pulses are not present.

By being so subjected to electrical pulses in the circuit of **Fig.2**, the water between the capacitor plates takes on an electrical charge which is increased by a step-charging phenomenon occurring in the water capacitor.. Voltage continually increases (to about 1000 volts and more) and the water molecules start to elongate.

The pulse train is then switched off; the voltage across the water capacitor drops to the amount of charge that the water molecules have taken on, i.e. voltage is maintained across the charged capacitor. The pulse train is then applied again.

Because a voltage potential applied to a capacitor can perform work, the higher the voltage potential, the more work is performed by a given capacitor. In an optimum capacitor which is wholly non-conductive, zero current flow will occur across the capacitor. Thus, in view of an idealised capacitor circuit, the object of the water capacitor circuit is to prevent electron flow through the circuit, i.e. such as occurs by electron flow or leakage through a resistive element that produces heat. Electrical leakage in water will occur, however, because of some residual conductivity and impurities, or ions that may otherwise be present in the water. thus, the water capacitor is preferably chemically inert. An electrolyte is not added to the water.

In the isolated water bath, the water molecule takes on charge, and the charge increases. The object of the process is to switch off the co-valent bonding of the water molecule and interrupt the sub-atomic force that binds the hydrogen and oxygen atoms together to form a molecule, thus causing the hydrogen and oxygen to separate.

Because an electron will only occupy a certain electron shell, the voltage applied to the capacitor affects the electrical forces inherent in the co-valent bond. As a result of the charge applied by the plates, the applied force becomes greater than the force of the co-valent bonds between the atoms of the water molecule, and the water molecule becomes elongated. When this happens, the time share ratio of the electrons between the atoms and the electron shells, is modified.

In the process, electrons are extracted from the water bath; electrons are not consumed nor are electrons introduced into the water bath by the circuit, as electrons would be during conventional electrolysis. Nevertheless, a leakage current through the water may occur. Those hydrogen atoms missing electrons become neutralised and atoms are liberated from the water. The charged atoms and electrons are attracted to opposite polarity voltage zones created between the capacitor plates. The electrons formerly shared by atoms in the water co-valent bond are re-allocated so that neutral elemental gasses are liberated.

In the process, the electrical resonance may be reached at all levels of voltage potential. The overall circuit is characterised as a “resonant charging choke” circuit which is an inductor in series with a capacitor [*SAMS Modern Dictionary of Electronics*, 1984 p.859]. Such a resonant charging choke is on each side of the capacitor. In the circuit, the diode acts as a switch which allows the magnetic field produced in the inductor to collapse, thereby doubling the pulse frequency and preventing the capacitor from discharging. In this manner, a continuous voltage is produced across the capacitor plates in the water bath and the capacitor does not discharge. The water molecules are thus subjected to a continuously charged field until the breakdown of the co-valent bond occurs.

As noted initially, the capacitance depends on the dielectric properties of the water and the size and separation of the conductive elements forming the water capacitor.

Example 1

In an example of the circuit of **Fig.2** (in which other circuit element specifications are provided above), two concentric cylinders 4 inches long, formed the water capacitor of the fuel cell in the volume of water. The outside cylinder was o.75 in outside diameter; the inner cylinder was 0.5 inch in outside diameter. Spacing between the inside cylinder and the outside cylinder was 0.0625 inch (1.59 mm). Resonance in the circuit was achieved at a 26 volt pulse applied to the primary coil of the torroid at 10khz and a gas mixture of hydrogen, oxygen and dissolved gasses was given off. The additional gasses included nitrogen and argon from air dissolved in the water.

In achieving resonance in any circuit, as the pulse frequency is adjusted, the current flow is minimised and the voltage on the capacitor plates is maximised. Calculation of the resonant frequency of an overall circuit is determined by known means; different cavities have a different resonant frequency. The gas production rate is varied by the period of time between trains of pulses, pulse amplitude, capacitor plate size and plate separation.

The wiper arm on the second inductor tunes the circuit and allows for contaminants in the water so that the charge is always applied to the capacitor. The voltage applied , determines the rate of breakdown of the molecule into its atomic components. As water in the cell is consumed, it is replaced by any appropriate means or control system.

Thus, in the first stage, which is of itself independently useful, a fuel gas mixture is produced having, in general, the components of elemental hydrogen and oxygen and some additional atmospheric gasses. The fuel gas is itself combustible in a conventional manner.

After the first stage, the gas atoms become elongated during electron removal as the atoms are ionised. Laser or light wave energy of a predetermined frequency is injected into a containment vessel in a gas ionisation process. The light energy absorbed by voltage-stimulated gas nuclei, causes destabilisation of gas ions still further. The absorbed laser energy causes the gas nuclei to increase in energy state, which in turn, causes electron deflection to a higher orbital shell.

The electrically charged and laser-primed combustible gas ions from a gas resonant cavity, may be directed into a an optical thermal lens assembly for triggering. Before entry into the optimal thermal lens, electrons are stripped from the ions and the atom is destabilised. The destabilised gas ions which are electrically and mass unbalanced atoms having highly energised nuclei, are pressurised during spark ignition. The unbalanced, destabilised atomic components interact thermally; the energised and unstable hydrogen gas nuclei collide with highly energised and unstable oxygen gas nuclei, causing and producing thermal explosive energy beyond the gas burning stage. The ambient air gas components in the initial mixture aid the thermal explosive process under a controlled state.

In the process, the point of optimum energy yield is reached when the electron-deficient oxygen atoms (having less than a normal number of electrons) lock on to an capture a hydrogen atom electron, prior to, or during, thermal combustion of the hydrogen/oxygen mixture. Atomic decay results in the release of energy.

After the first stage, the gas mixture is subjected to a pulsating, polar electric field which causes the orbits of the electrons of the gas atoms to become distended . The pulsating electrical field is applied at a frequency which resonates with the electrons of the gas atoms. This results in the energy levels of the electrons increasing in cascading incremental steps.

Next, the gas atoms are ionised and subjected to electromagnetic wave energy of the correct frequency to induce further electron resonance in the ion, whereby the energy level of the electron is successively increased. Electrons are extracted from the resonating ions while they are in this increased energy state, and this destabilises the nuclear electron configuration of the ions. This gas mixture of destabilised ions is thermally ignited.

In the apparatus shown in **Fig.4**, water is introduced at inlet **1** into a first stage water fracturing module **2**, such as the water fuel cell described above, in which water molecules are broken down into hydrogen, oxygen and released gasses which were trapped in the water. These gasses may be introduced to a successive stage **3** or other number of like resonant cavities, which are arranged in either a series or parallel combined array. The successive energisation of the gas atoms, provides a cascading effect, successively increasing the voltage stimulation level of the released gasses as they pass sequentially through cavities **2**, **3**, etc. In a final stage, and injector system **4**, of a configuration of the type shown in **Fig.5A** or **Fig.5B**, receives energised atomic and gas particles where the particles are subjected to further energy input, electrical excitation and thermal stimulation, which produces thermal explosive energy **5**, which may be directed through a lens assembly of the type shown in **Fig.5C** to provide a controlled thermal energy output.

A single cell, or battery of cells such as shown in **Fig.3**, provides a fuel gas source for the stages following the first stage. The fuel gas is activated by electromagnetic waves, and electrically charged gas ions of hydrogen and oxygen (of opposite polarity) are expelled from the cascaded cells **2**, **3**, etc. shown in **Fig.4**. The circuit of **Fig.9** may be utilised as a source of ionising energy for the gasses. The effect of cascading, successively increases the voltage stimulation level of the released gasses, which are then directed to the final injector assembly **4**. In the injector assembly, gas ions are stimulated to an even greater energy level. The gasses are continually exposed to a pulsating laser or other electromagnetic wave energy source together with a high-intensity oscillating voltage field which occurs within the cell between electrodes or conductive plates of opposite electrical polarity. A preferred construction material for the plates is a stainless steel T-304 which is non-chemically reactive with water, hydrogen or oxygen. An electrically conductive material inserted in the fluid environment, is a desirable material of construction for the electrical field producing plates, through which field, the stream of activated gas particles passes.

Gas ions of opposite electrical charges reach and maintain a critical energy level state. The gas ions have opposite electrical charges and are subjected to oscillating voltage fields of opposite polarity. They are also subjected to a pulsating electromagnetic wave energy source. Immediately after reaching critical energy, the excited gas ions are exposed to a high temperature thermal zone in the injection cell **4**, which causes the excited gas ions to undergo gas combustion. The gas ignition triggers atomic decay and releases thermal energy **5**, with explosive force.

Once triggered, the explosive thermal energy output is controllable by the attenuation of operational parameters. With reference to **Fig.6A**, for example, once the frequency of resonance is identified, by varying applied pulse voltage to the initial water fuel cell assemblies **2**, **3**, the ultimate explosive energy output is likewise varied. By varying the pulse shape and/or amplitude, or pulse train sequence of the electromagnetic wave energy source, final output is varied. Attenuation of the voltage field frequency in the form of OFF and ON pulses, likewise affects the output of the staged apparatus. Each control mechanism can be used separately, grouped in sections, or systematically arranged in a sequential manner.

A complete system in accordance with the present application thus includes:

1. A water fuel cell for providing a first fuel gas mixture consisting of at least a portion of hydrogen and oxygen gas.
2. An electrical circuit of the type shown in **Fig.7** providing a pulsating, polar electric field to the gas mixture as illustrated in **Fig.6A**, whereby electron orbits of the gas atoms are distended by being subjected to electrical polar forces, changing from the state shown conceptually in **Fig.6B** to that of **Fig.6C**, at a frequency such that the pulsating electric field induces a resonance with respect to electrons of the gas atoms. The energy level of the resonant electrons is thereby increased in cascading incremental steps.
3. A further electric field to ionise the gas atoms and
4. An electromagnetic wave energy source for subjecting the ionised gas atoms to wave energy of a predetermined frequency to induce further electron resonance in the ions, whereby the energy level of the electron is successively increased, as shown in **Fig.6D**.
5. An electron sink, which may be in the form of the grid element shown in **Fig.8A**, extracts further electrons from the resonating ions while such ions are in an increased energy state and destabilises the nuclear electron configuration of the ions. The “extraction” of electrons by the sink is co-ordinated with the pulsating electrical field of the resonant cavity produced by the circuit of **Fig.7**, by means of
6. An interconnected synchronisation circuit, such as shown in **Fig.8B**.
7. A nozzle, **10** in **Fig.5B**, or thermal lens assembly, **Fig.5C**, provides the means to direct the destabilised ions, and in which they are finally thermally ignited.

As previously noted, to reach and trigger the ultimate atomic decay of the fuel cell gasses at the final stage, sequential steps are taken. First, water molecules are slit into hydrogen and oxygen gasses by a voltage stimulation process. In the injector assembly, a laser produced coherent light wave is absorbed by the gasses. At this point, as shown in **Fig.6B**, the individual atoms are subjected to an electric field to begin an ionisation process. The laser energy is absorbed and causes gas atoms to lose electrons and form positively charged gas ions. The energised, positively charged hydrogen atoms now accept electrons liberated from the heavier gasses and attract other negatively charged gas ions as conceptually illustrated in **Fig.6C**. Positively and negatively charged gas ions are re-exposed to further pulsating energy sources to maintain random distribution of ionised gas particles.

The gas ions within the wave energy chamber are subjected to an oscillating high-intensity voltage field in a chamber **11** in **Fig.5A** and **Fig.5B** formed within electrodes **12** and **13** in **Fig.5A** and **Fig.5B** of opposite electrical polarity, to produce a resonant cavity. The gas ions reach a critical energy state at the point of resonance.

At this point, within the chamber, additional electrons are attracted to the positive electrode; while positively charged ions or atomic nuclei are attracted to the negative electrode. The positive and negative attraction forces are co-ordinated and act on the gas ions simultaneously; the attraction forces are non-reversible. The gas ions experience atomic component deflection approaching the point of electron separation. At this point electrons are extracted from the chamber by a grid system such as shown in **Fig.5A**. The extracted electrons are consumed and prevented from re-entering the chamber by a circuit such as shown in **Fig.8B**. The elongated gas ions are subjected to a thermal heat zone to cause gas ignition, releasing thermal energy with explosive force. During ionic gas combustion, highly energised and stimulated atoms and atom nuclei collide and explode during thermal excitation. The hydrogen fracturing process occurring, sustains and maintains a thermal zone, at a temperature in excess of normal oxygen/hydrogen combustion temperature, that is, in excess of 2,500 degrees Fahrenheit. To cause and maintain the atomic elongation depicted in **Fig.6C** before gas ignition, a voltage intensifier circuit such as shown in **Fig.7** is utilised as a current-restricting voltage source to provide the excitation voltage applied to the resonant cavity. At the same time, the interconnected electron extractor circuit shown in **Fig.8B**, prevents the reintroduction of electrons back into the system. depending on calculated design parameters, a predetermined voltage and frequency range may be designed for any particular application or physical configuration of the apparatus.

In the operation of the assembly, the pulse train source for the gas resonant cavity shown at **2** and **3** in **Fig.4** may be derived from a circuit such as shown in Figs. **2**, **7** or **9**, and such cavity circuits may be in sequence to provide a cascading energy input. It is necessary in the final electron extraction, that the frequency with which electrons are removed from the system be sequenced and synchronised with the pulsing of the gas resonant cavity. In the circuit of **Fig.8B**, the co-ordination of synchronisation of the circuit with the circuit of **Fig.7** may be achieved by interconnecting point **"A"** of the gate circuit of **Fig.8B** to point **"A"** of the pulsing circuit of **Fig.7**.

The circuit shown in **Fig.9** enhances the voltage potential across the resonant charging choke coils during pulsing operations and restricts current flow by allowing an external electromagnetic pulsing field **F**, derived from the primary coil **A** being energised to traverse the coil windings **D** and **E** being energised by the incoming pulse train **Ha xxx Hn**, through switching diode **G**. The external pulse field **F**, and the incoming pulse train **Ha xxx Hn**, are sequentially the same, allowing resonant action to occur, restricting current flow while allowing voltage intensity to increase to stimulated the electrical polarisation process, the gas ionisation process and the electron extraction process. The voltage intensifier circuit of **Fig.9** prevents electrons from entering into those processes.

Together, the hydrogen injector assembly **4**, and the resonant cavity **2** and **3**, form a gas injector fuel cell which is compact, low in weight and whose design can be varied. For example, the hydrogen injector system is suited for cars and jet engines. Industrial applications require larger systems. For rocket engine applications, the hydrogen gas injector system is positioned at the top of each resonant cavity arranged in a parallel cluster array. If resonant cavities are sequentially combined in a parallel/series array, the hydrogen injection assembly is positioned after the exits of the resonant cavities have been combined.

From the outline of the physical phenomena associated with the process described in **Table 1**, the theoretical basis of the invention considers the respective states of molecules, gasses and ions derived from liquid water. Before voltage stimulation, water molecules are randomly dispersed throughout water within a container. When a unipolar voltage pulse train such as shown in **Fig.6A (53a xxx 53n)** is applied, an increasing voltage potential is induced in the molecules, gasses and/or ions in a linear, step-like charging effect. The electrical field of the particles within a chamber including the electrical field plates increases from a low-energy state (**A**) to a high-energy state (**J**) in a step manner, following each pulse train as illustrated in **Fig.6A**. The increasing voltage potential is always positive in direct relationship to negative ground potential during each pulse. The voltage polarity on the plates which create the voltage fields, remains constant. Positive and negative voltage "zones" are thus formed simultaneously.

In the first stage of the process described in **Table 1**, because the water molecule naturally exhibits opposite electric fields in a relatively polar configuration (the two hydrogen atoms are positively electrically charged relative to the negatively electrically charged oxygen atom), the voltage pulse causes initially randomly orientated water molecules in the liquid state to spin and orientate themselves with reference to the voltage fields applied.

When the potential difference applied causes the oriented water molecules to align themselves between the conductive plates, pulsing causes the voltage field intensity to be increased in accordance with **Fig.6A**. As further molecular alignment occurs, molecular movement is hindered. Because the positively charged hydrogen atoms are attracted in the opposite direction to the negatively charged oxygen atoms, a polar charge alignment or distribution occurs as shown in **Fig.6B**. As the energy level of the atoms subjected to resonant pulsing increases, the stationary water molecules become elongated as shown in **Fig.6C**. Electrically charged nuceli and electrons are attracted towards opposite voltage zones, disrupting the mass equilibrium of the water molecule.

In the first stage, as the water molecule is further exposed to a potential difference, the electrical force of attraction of the atoms to the chamber electrodes also increases in intensity. As a result, the co-valent bonding between the atoms is weakened and ultimately, terminated. The negatively charged electron is attracted towards the positively charged hydrogen atoms, while at the same time, the negatively charged oxygen atoms repel electrons.

Once the applied resonant energy caused by pulsation of the electrical field in the cavities reaches a threshold level, the disassociated water molecules, now in the form of liberated hydrogen, oxygen and ambient air gasses, begin to ionise and lose or gain electrons during the final stage in the injector assembly. Atom destabilisation occurs and the electrical and mass equilibrium of the atoms is disrupted. Again, the positive field produced within the chamber or cavity that the encompasses the gas stream, attracts negatively charged ions while the positively charged ions are attracted to the negative field. Atom stabilisation does not occur because the pulsing voltage applied is repetitive without polarity change. A potential of approximately several thousand volts, triggers the ionisation state.

As the ionised particles accumulate within the chamber, the electrical charging effect is again an incremental stepping effect that produces an accumulative increased potential, while, at the same time, resonance occurs. The components of the atom begin to “vibrate” at a resonant frequency such that an atomic instability is created. As shown in **Fig.6D**, a high energy level is achieved, which then collapses, resulting in the release of thermal explosive energy. Particle impact occurs when liberated ions in a gas are subjected to further voltage. A longitudinal cross-section of a gas resonant cavity is shown in **Fig.5A**. To promote gas ionisation, electromagnetic wave energy such as a laser or photon energy source of a predetermined wavelength and pulse intensity is directed to, and absorbed by, the ions of the gas. In the device of **Fig.5A**, semiconductor optical lasers **20a - 20p, 20xxx** surround the gas flow path. In the device of **Fig.5B**, photo energy **20** is injected into a separate absorption chamber **21**. The incremental stimulation of nuclei to a more highly energised state by electromagnetic wave energy causes electron deflection to a higher orbital state.   The pulse rate as well as intensity of the electromagnetic wave source is varied to match the absorption rate of ionised particles to produce the stepped incremental increase in energy. A single laser coupled by means of fibre optic light guides is an alternative to the plurality of lasers shown in **Fig.5B**. Continued exposure of the gas ions to different forms of wave energy during voltage stimulation, maintain individual atoms in a destabilised state and prevents atomic stabilisation.

The highly energised gas ions are thermally ignited when they pass from injector **4** and enter into and pass through a nozzle **10** in **Fig.5B**, or an optical thermal lens assembly as shown in **Fig.5C**. In **Fig.5C**, the combustible gas ions are expelled through and beyond a quenching circuit **30**, and reflected by lenses **31** and **32**, back and forth through a thermal heat zone **33**, prior to atomic breakdown and then exiting through a final port **34**. A quenching circuit is a restricted orifice through which the particle stream passes, such that flashback does not occur. The deflection shield or lens **31**, superheats beyond 3000 degrees Fahrenheit and the combustible gas ions passing through the exiting ports are regulated to allow a gas pressure to form inside the thermal zone. The energy yield is controlled by varying the applied voltage or pulse-train since the thermal-lens assembly is self-adjusting to the flow rate of the ionised and primed gasses. The combustible ionic gas mixture is composed of hydrogen, oxygen and ambient air gasses. The hydrogen gas provides the thermal explosive force, the oxygen atoms aid the gas thermal ignition, and the ambient air gasses retard the gas thermal ignition process to a controllable state.

As the combustible gas mixture is exposed to a voltage pulse train, the stepped increasing voltage potential causes the moving gas atoms to become ionised (losing or gaining electrons) and changes the electrical and mass equilibrium of the atoms. Gasses which do not undergo the gas ionisation process may accept the liberated electrons (electron entrapment) when exposed to light or photon stimulation. The electron extractor grid circuit shown in **Fig.8A** and **Fig.8B**, is applied to the assembly of **Fig.5A** or **Fig.5B**, and restricts electron replacement. The extractor grid **56**, is applied adjacent to electric field producing components **44** and **45**, within the resonant cavity. The gas ions incrementally reach a critical state which occurs after a high energy resonant state. At this point, the atoms no longer tolerate the missing electrons, the unbalanced electrical field and the energy stored in the nucleus. Immediate collapse of the system occurs and energy is released as the atoms decay into thermal explosive energy.

The repetitive application of a voltage pulse train (**A** through **J** of **Fig.6A**) incrementally achieves the critical state of the gas ions. As the gas atoms or ions (**1a xxx 1n**) shown in **Fig.6C**, become elongated during electron removal, electromagnetic wave energy of a predetermined frequency and intensity is injected. The wave energy absorbed by the stimulated gas nuclei and electrons, causes further destabilisation of the ionic gas. The absorbed energy from all sources, causes the gas nuclei to increase in energy state and induces the ejection of electrons from the nuclei.

To further stimulate the electron entrapment process beyond the atomic level (capturing the liberated electrons during the hydrogen fracturing process), the electron extractor grid (as shown in **Fig.8A**) is placed in spaced relationship to the gas resonant cavity structure shown in **Fig.5A**. The electron extractor grid is attached to an electrical circuit (such as that shown in **Fig.8B**) which allows electrons to flow to an electrical load **55**, when a positive electrical potential is placed on the opposite side of the electrical load. The electrical load may be a typical power-consuming device such as a light bulb or resistive heat-producing device. As the positive electrical potential is switched on, or pulse-applied, the negatively charged electrons liberated in the gas resonant cavity, are drawn away and enter into the resistive load where they are released as heat or light energy. The consuming electrical circuit may be connected directly to the gas resonant cavity positive electrical voltage zone. The incoming positive wave form applied to the resonant cavity voltage zone through a blocking diode, is synchronised with the pulse train applied to the gas resonant cavity by the circuit of **Fig.7** via an alternate gate circuit. As one pulse train is gated “ON”, the other pulse train is switched “OFF”. A blocking diode directs the electron flow to the electrical load, while resistive wire prevents voltage leakage during the pulse train “ON” time.

The electron extraction process is maintained during gas-flow change by varying the trigger pulse rate in relationship to the applied voltage. The electron extraction process also prevents spark-ignition of the combustible gasses travelling through the gas resonant cavity because electron build-up and potential sparking is prevented.

In an optical thermal lens assembly or thrust-nozzle, such as shown in **Fig.5C**, destabilised gas ions (electrically and mass unbalanced gas atoms having highly energised nuclei) can be pressurised during spark ignition. During thermal interaction, the highly energised and unstable hydrogen gas nuclei collide with the highly energised and unstable oxygen gas nuclei and produce thermal explosive energy beyond the gas-burning stage. Other ambient air gasses and ions not otherwise consumed, limit the thermal explosive process.

STANLEY MEYER

Canadian Patent 2,067,735 16th May 1991 Inventor: Stanley Meyer

WATER FUEL INJECTION SYSTEM

ABSTRACT

An injector system comprising an improved method and apparatus useful in the production of a hydrogen containing fuel gas from water in a process in which the dielectric property of water and/or a mixture of water and other components determines a resonant condition that produces a breakdown of the atomic bonding of atoms in the water molecule. The injector delivers a mixture of water mist, ionised gases and non-combustible gas to a zone within which the breakdown process leading to the release of elemental hydrogen from the water molecules occurs.

DESCRIPTION

This invention relates to a method and apparatus useful in producing thermal combustive energy from the hydrogen component of water.

In my patent no. 4,936,961 “Method for the Production of a Fuel Gas”, I describe a water fuel cell which produces a gas energy source by a method which utilises water as a dielectric component of a resonant electrical circuit.

In my patent no. 4,826,581 “Controlled Process for the Production of Thermal Energy From Gasses and Apparatus Useful Therefore”, I describe a method and apparatus for obtaining the enhanced release of thermal energy from a gas mixture including hydrogen and oxygen in which the gas is subjected to various electrical, ionising and electromagnetic fields.

In my co-pending application serial no. 07/460,859 “Process and Apparatus for the Production of Fuel Gas and the Enhanced Release of Thermal Energy from Fuel Gas”, I describe various means and methods for obtaining the release of thermal/combustive energy from the hydrogen (H) component of a fuel gas obtained from the disassociation of a water (H_2O) molecule by a process which utilises the dielectric properties of water in a resonant circuit; and in that application I more thoroughly describe the physical dynamics and chemical aspects of the water-to-fuel conversion process.

The invention of this present application represents generational improvement in methods and apparatus useful in the utilisation of water as a fuel source. In brief, the present invention is a microminiaturised water fuel cell which permits the direct injection of water, and its simultaneous transformation into a hydrogen-containing fuel, in a combustion zone, such as a cylinder in an internal combustion engine, a jet engine or a furnace. Alternatively, the injection system of the present invention may be utilised in any non-engine application in which a concentrated flame or heat source is desired, for example: welding.

The present injection system eliminates the need for an enclosed gas pressure vessel in a hydrogen fuel system and thereby reduces a potential physical hazard heretofore associated with the use of hydrogen-based fuels. The system produces fuel-on-demand in real-time operation and sets up an integrated environment of optimum parameters so that a water-to-fuel conversion process works at high efficiency.

The preferred embodiment of the invention is more fully explained below with reference to the drawings in which:

Fig.1 figuratively illustrates the sections and operating zones included in a single injector of the invention.

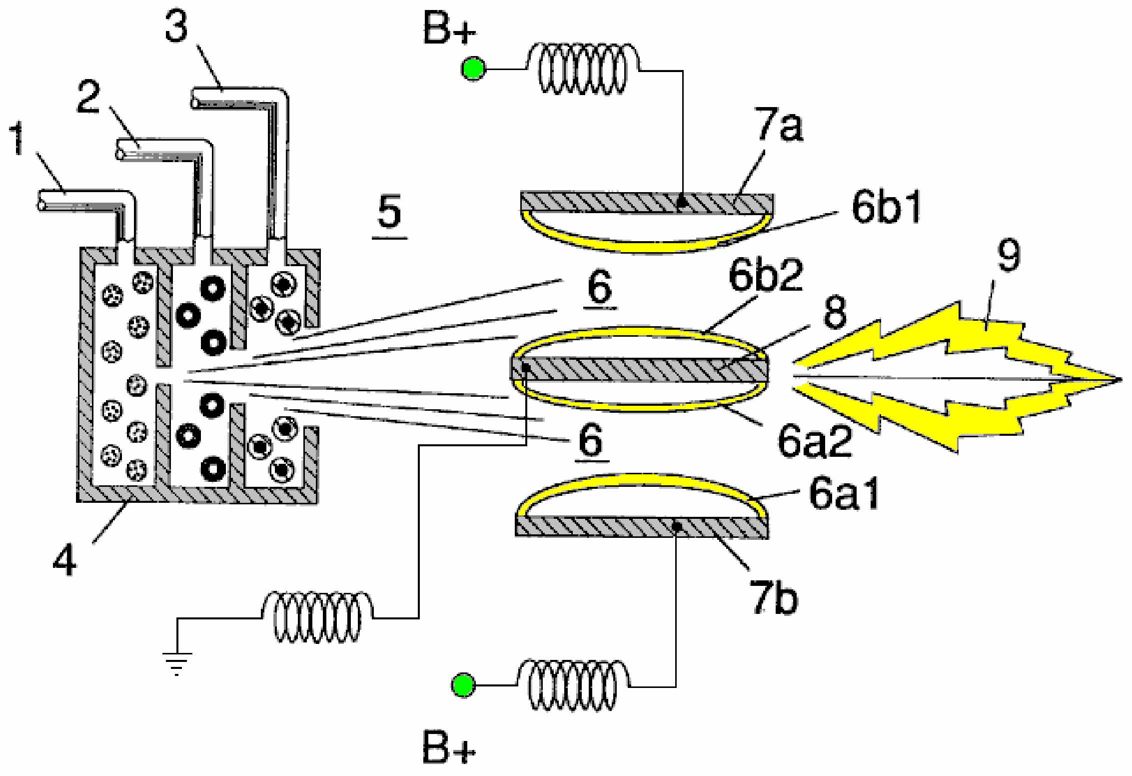

Fig.2A is a side cross-sectional view.

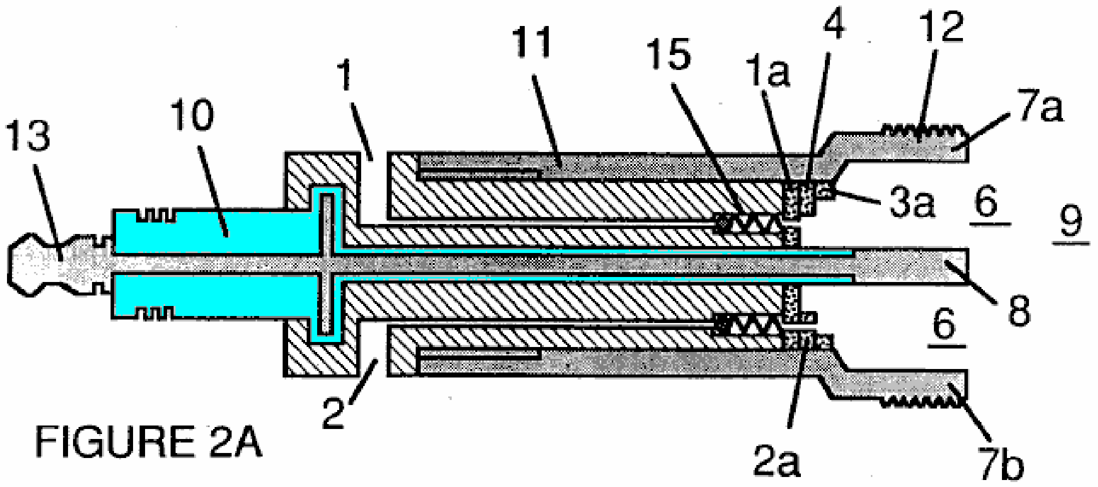

Fig.2B is a frontal view from the operative end.

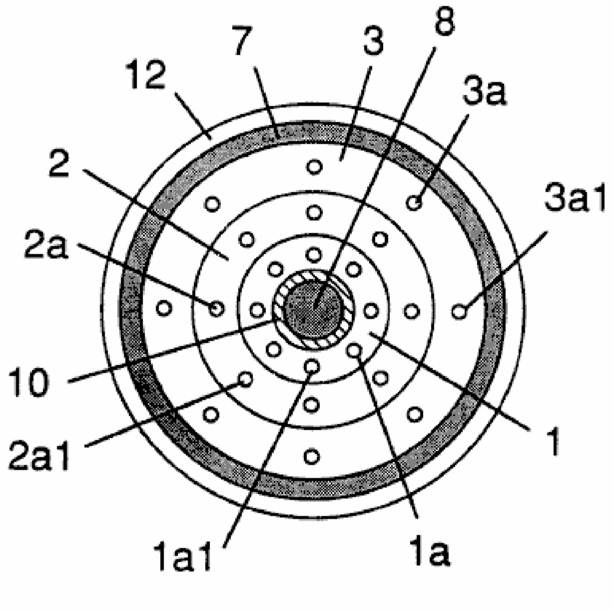

FIGURE 2B

Fig.2C is an exploded view of an individual injector.

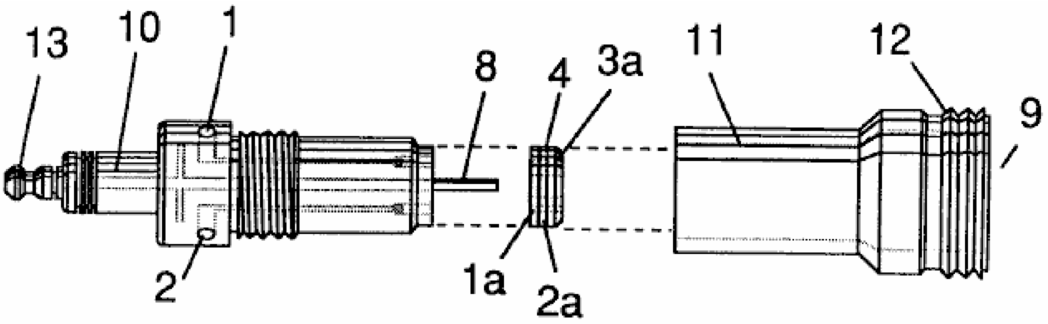

FIGURE 2C

Fig.3 and **Fig.3A** show the side and frontal cross-sectional views of an alternatively configured injector.

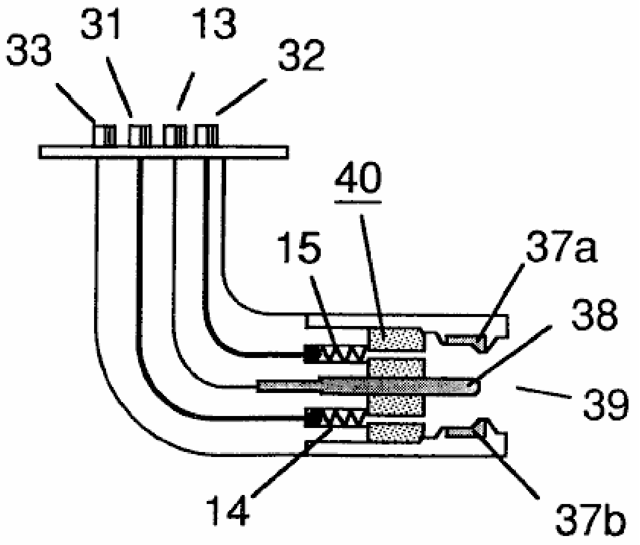

FIGURE 3

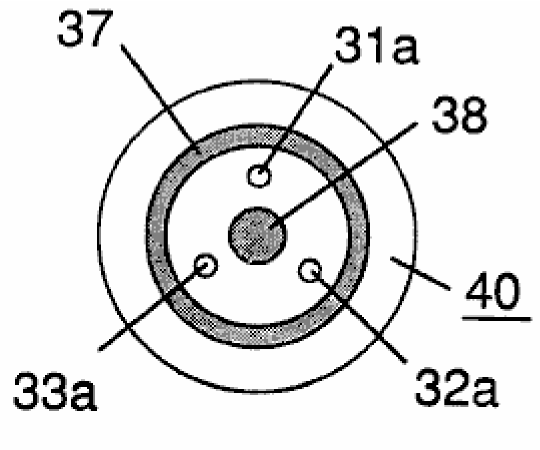

FIGURE 3A

Fig.4 shows a disk array of injectors.

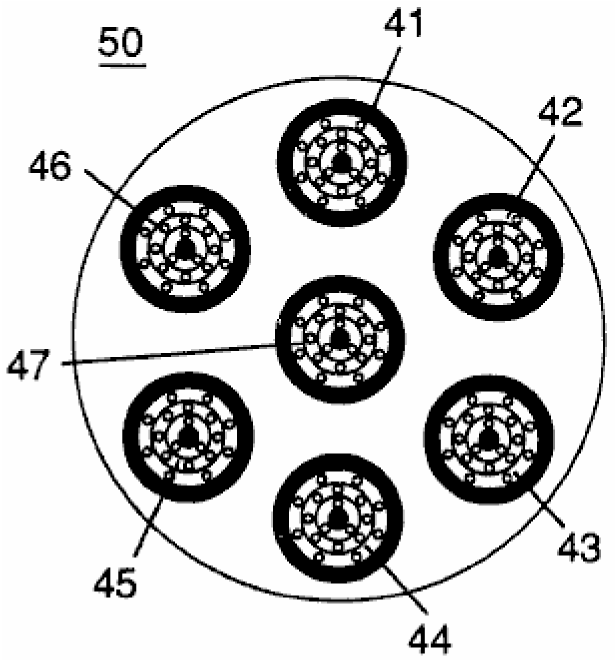

FIGURE 4

Fig.5 shows the resonance electrical circuit including the injector.

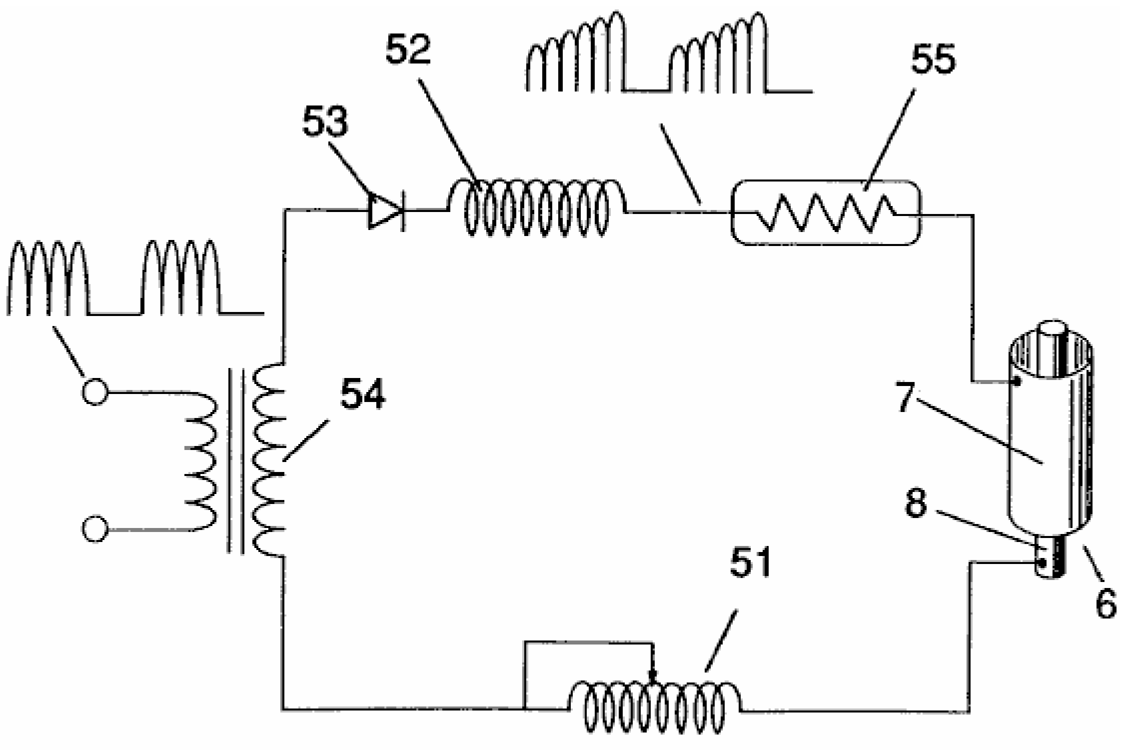

FIGURE 5

Fig.6 depicts the inter-relationship of the electrical and fuel distribution components of an injector system.

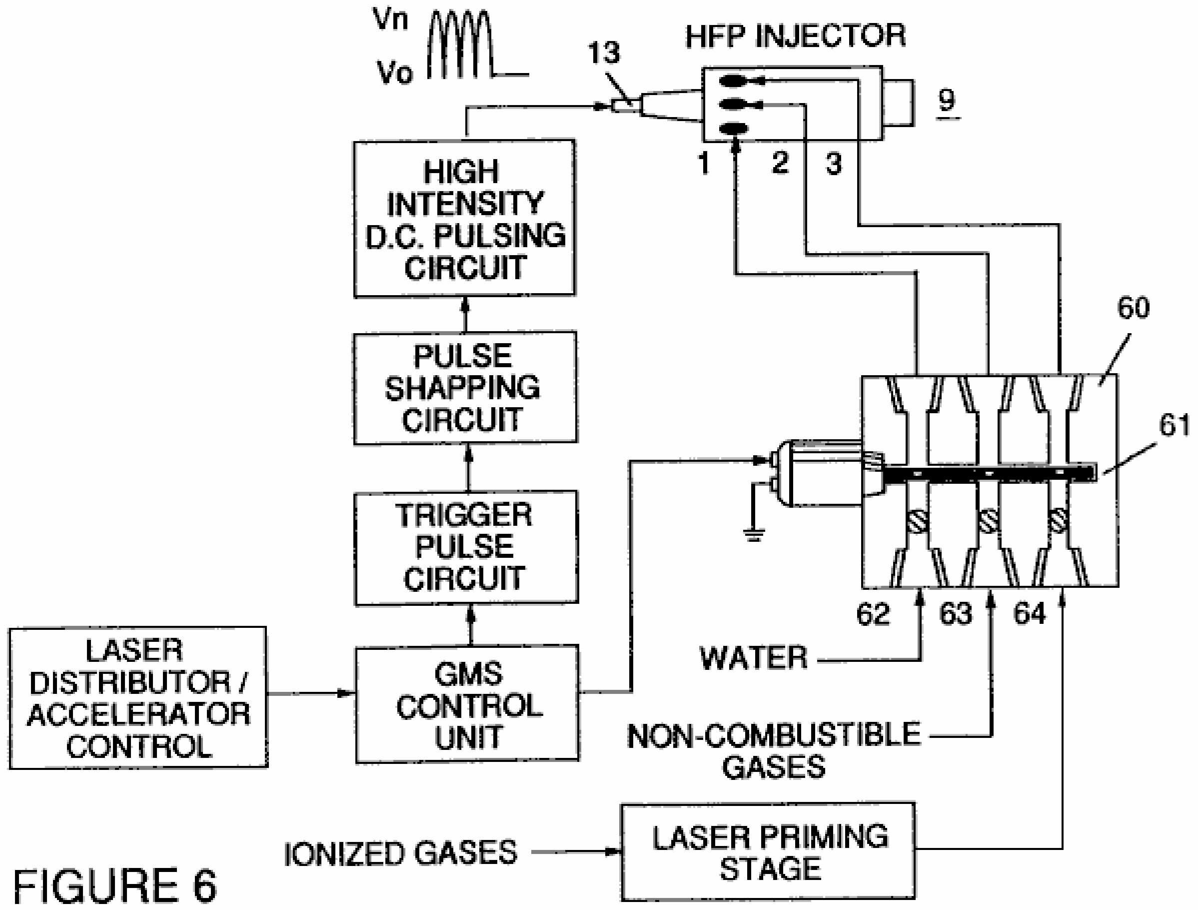

FIGURE 6

Although I refer to an "injector" in this document, the invention relates not only to the physical configuration of an injector apparatus, but also to the overall process and system parameters determined in the apparatus to achieve the release of thermal energy. In a basic outline, an injector regulates the introduction of process constituents into a combustion zone and sets up a fuel mixture condition permitting combustion. That combustion condition is triggered simultaneously with injector operation in real-time correspondence with control parameters for the process constituents.

In the fuel mixture condition which is created by the injector, water (H_20) is atomised into a fine spray and mixed with **1** ionised ambient air gasses and **2** other non-combustible gasses such as nitrogen, argon and other rare gasses, and water vapour. (Exhaust gas produced by the combustion of hydrogen with oxygen is a non-combustible water vapour. This water vapour and other inert gasses resulting from combustion may be recycled from an exhaust outlet in the injector system, back into the input mixture of non-combustible gasses.) The fuel mix is introduced at a consistent flow rate maintained under a predetermined pressure. In the triggering of the condition created by the injector, the conversion process described in my patent no. 4,936,961 and co-pending application serial no. 07/460,859 is set off spontaneously on a "micro" level in a predetermined reaction zone. The injector creates a mixture, under pressure in a defined zone of water, ionised gasses and non-combustible gasses. Pressure is an important factor in the maintenance of the reaction condition and causes the water/gas mixture to become intimately mixed, compressed and destabilised to produce combustion when activated under resonance conditions of ignition. In accordance with the earlier mentioned conversion process of my patent and application, when water is subjected to a resonance condition water molecules expand and distend; electrons are ejected from the water molecule and absorbed by ionised gasses and the water molecule, thus destabilised, breaks down into its elemental components of hydrogen (H_2) and oxygen (O) in the combustion zone. The hydrogen atoms released from the molecule provide the fuel source in the mixture for combustion with oxygen. The present invention is an application of that process and is outlined in Table 1:

Table 1

Injector Mixture	+	Process conditions	=	Thermal Energy
(1) Water Mist		(1) Release Under pressure into Combustion Zone		(1) Heat
and				or
		and		(2) Internal Combustion Engine (Explosive force)
(2) Ionised Gas		(2) Resonance utilising the dielectric property of water as a capacitor		
and				or
		and		(3) Jet Engine
(3) Non-combustible Gas		(3) Unipolar pulsing at high voltage		or
				(4) Other application

The process occurs as water mist and gasses under pressure are injected into, and intimately mixed in the combustion zone and an electrically polarised zone. In the electrically polarised zone, the water mixture is subjected to a unipolar pulsed direct current voltage which is tuned to achieve resonance in accordance with the electrical, mass and other characteristics of the mixture as a dielectric in the environment of the combustion zone. The resonant frequency will vary according to the injector configuration and depends upon the physical characteristics, such as the mass and volume of the water and gasses in the zone. As my prior patents and application point out, the resonant condition in the capacitative circuit is determined by the dielectric properties of water: (1) as the dielectric in a capacitor formed by adjacent conductive surfaces, and (2) as the water molecule itself is a polar dielectric material. At resonance, current flow in the resonant electrical circuit will be minimised and voltage will peak.

The injector system provides a pressurised fuel mixture for subjection to the resonant environment of the voltage combustion zone as the mixture is injected into the zone. In a preferred embodiment, the injector includes concentrically nested serial orifices, one for each of the three constituent elements of the fuel mixture. (It may be feasible to combine and process non-combustible and ionised gasses in advance of the injector. In this event, only two orifices are required, one for the water and the other for the combined gasses.) The orifices disperse the water mist and gasses under pressure into a conically shaped activation and combustion zone.

Fig1A shows a transverse cross-section of an injector, in which, supply lines for water **1**, ionised gas **2**, and non-combustible gas **3**, feed into a distribution disk assembly **4** which has concentrically nested orifices. The fuel mixture passes through a mixing zone **5**, and a voltage zone **6**, created by electrodes **7a** and **7b** (positive) and **8** (negative or ground). Electrical field lines are shown as **6a1** and **6a2** and **6b1** and **6b2**. Combustion (i.e. the oxidation of hydrogen) occurs in the zone **9**. Ignition of the hydrogen can be primed by a spark or may occur spontaneously as a result of the exceptionally high volatility of hydrogen and its presence in a high-voltage field.

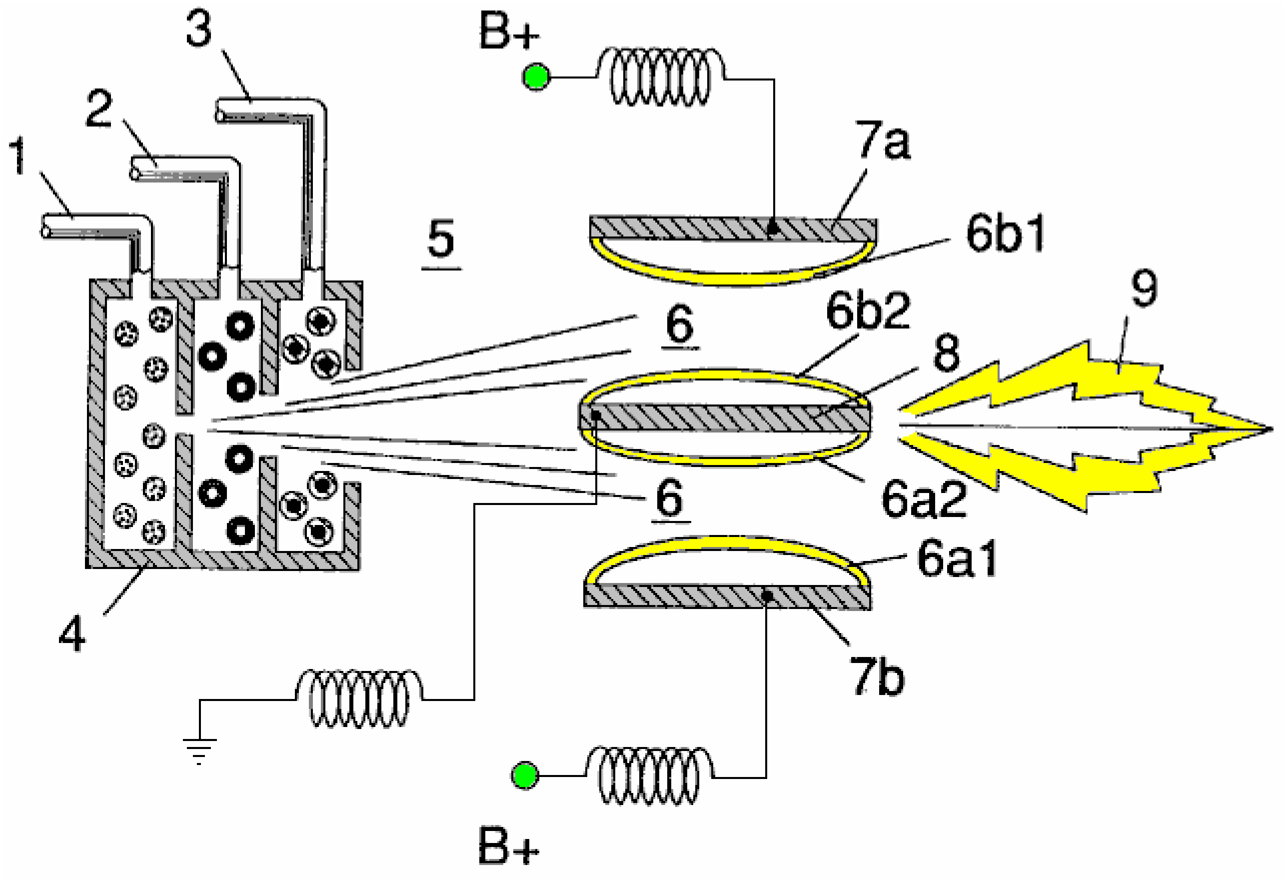

Although the mixing zone, the voltage zone and the combustion zone are mentioned separately in this explanation, they are not in fact physically separated, as can be seen from **Fig.1**. In the zone(s), there is produced an "excited" mixture of vaporised water mist, ionised gasses and other non-combustible gasses, all of which have been instantaneously released from under high pressure. Simultaneously, the released mixture in the zone, is exposed to a pulsed voltage at a frequency corresponding to electrical resonance. Under these conditions, outer-shell electrons of atoms in the water molecule are de-stabilised and molecular time-share is interrupted. Thus, the gas mixture in the injector zone is subjected to physical, electrical and chemical interactive forces which cause a breakdown of the atomic bonding forces of the water molecule.

Process parameters are determined, based on the size of a particular injector. In an injector sized appropriately for use to provide a fuel mixture to a conventional cylinder in a passenger vehicle car engine, the injector may resemble a conventional spark plug. In such an injector, the water orifice is 0.1 to 0.15 inch in diameter; the ionised gas orifice is 0.15 to 0.2 inch in diameter, and the non-combustible gas orifice is 0.2 to 0.25 inch in diameter. In such a configuration, the serial orifices increase in size from the innermost orifice, as appropriate in a concentric configuration. As noted above, it is desirable to maintain the introduction of the fuel components at a constant rate. Maintaining a back-pressure of about 125 pounds per square inch for each of the three fuel gas constituents appears to be satisfactory for a "spark-plug" injector. In the pressurised environment of the injector, spring-loaded one-way check valves in each supply line, such as **14** and **15**, maintain pressure during pulse off times.

Voltage zone **6** surrounds the pressurised fuel mixture and provides an electrically charged environment of pulsed direct current in the range from about 500 to 20,000 volts and more, at a frequency tuned into the resonant characteristic of the mixture. this frequency will typically lie within the range from about 20 KHz to about 50 KHz, dependent, as noted above, on the mass flow of the mixture from the injector and the dielectric property of the mixture. In a spark-plug sized injector, the voltage zone will typically extend longitudinally about 0.25 to 1.0 inch to permit sufficient dwell time of the water mist and gas mixture between the conductive surfaces **7** and **8** which form a capacitor so that resonance occurs at a high-voltage pulsed frequency, and combustion is triggered. In the zone, an energy wave which is related to the resonant pulse frequency, is formed. The wave continues to pulse through the flame in the combustion zone. The thermal energy produced is released as heat energy. In a confined zone such as a piston/cylinder engine, gas detonation under resonant conditions, produces explosive physical power.

In the voltage zone, the time-share ratio of the hydrogen and oxygen atoms comprising the individual water molecules in the water mist, is upset in accordance with the process explained in my patent no. 4,936,961 and application serial no. 07/460,859. Namely, the water molecule, which is itself a polar structure, is distended or distorted in shape by being subjected to the polar electric field in the voltage zone. The resonant condition induced in the molecule by the unipolar pulses, upsets the molecular bonding of shell electrons such that the water molecule, at resonance, breaks apart into its constituent atoms. In the voltage zone, the water molecules are excited into an ionised state, and the pre-ionised gas component of the fuel mixture, captures the electrons released from the water molecule. In this manner, at the resonant condition, the water molecule is destabilised and the constituent atomic elements of the molecule 2H and O, are released and the released hydrogen atoms are available for combustion. the non-combustible gasses in the fuel mixture, reduce the burn rate of hydrogen to that of a hydrocarbon fuel such as gasoline (petrol) or kerosene (paraffin), from its normal burn rate which is about 2.5 times that of gasoline. Hence the presence of non-combustible gasses in the fuel mixture, moderates the energy release and the rate at which the free hydrogen and oxygen molecules combine in the combustion process.

The combustion process does not occur spontaneously so the conditions in the zone must be fine-tuned carefully to achieve an optimum input flow rate for water and the gasses corresponding to the maintenance of a resonant condition. The input water mist and gasses may likewise be injected into the zone in a physically pulsed (on/off) manner corresponding to the resonance achieved. In an internal combustion engine, the resonance of the electrical circuit and the physical pulsing of the input mixture may be required to be related to the combustion cycle of the reciprocating engine. In this regard, one or two conventional spark plugs may require a spark cycle tuned in correspondence to the conversion cycle resonance, so that combustion of the mixture will occur. Thus, the input flow, conversion rate and combustion rate are interrelated and optimally, each should be tuned in accordance with the circuit resonance at which conversion occurs.

The injection system of the present invention is suited to retrofit applications in conventionally fuelled gasoline and diesel internal combustion engines and conventionally fuelled jet aircraft engines.

Example 1

Figs 2A, 2B and **2C** illustrate a type of injector useful, among other things, as a fuel source for a conventional internal combustion engine. In the cross-section of **Fig.2A**, reference numerals corresponding to the identifying numerals used in **Fig.1** show a supply line for water **1**, leading to first distribution disc **1a** and supply line for ionised gas **2**, leading to second distribution disc **2a**. In the cross-section, the supply line for non-combustible gas **3** leading to distribution disc **3a**, is not illustrated, however, its location as a third line should be self evident. The three discs comprise distribution disc assembly 4. The supply lines are formed in an electrically insulating body **10**, surrounded by electrically conductive sheath/housing **11** having a threaded end segment **12**.

A central electrode **8**, extends the length of the injector. Conductive elements **7a** and **7b** (**7a** and **7b** depict opposite sides of the diameter in the cross-section of a circular body), adjacent threaded section **12** and electrode **8**, form the electrical polarisation zone **6** adjacent to combustion zone **9**. An electrical connector **13** may be provided at the other end of the injector. (In this document, the term “electrode” refers to the conductive surface of an element forming one side of a capacitor.) In the frontal view of **Fig.2B**, it is seen that each disc making up the distribution disc assembly **9**, includes a plurality of micro-nozzles **1a1, 2a1, 3a1**, etc. for the injection of the water and gasses into the polarisation/voltage and combustion zones. The exploded view of **Fig.2C** shows another view of the injector and additionally depicts two supply line inlets **1** and **2**, the third not being shown because of the inability of representing the uniform 120^0 separation of three lines in a two-dimensional drawing.

In the injector, water mist (forming droplets in the range, for example, of from 10 to 250 microns and above, with size being related to voltage intensity) is injected into the fuel-mixing and polarising zone by way of water spray nozzles **1a1**. The tendency of water to form a “bead” or droplet is a parameter related to droplet mist size and voltage intensity. ionised air gasses and non-combustible gasses, introduced through nozzles **2a1** and **3a1**, are intermixed with the expelling water mist to form a fuel-mixture which enters into voltage zone **6** where the mixture is exposed to a pulsating, unipolar, high-intensity voltage field (typically 20,000 volts at 50 Hz or above, at the resonant condition in which current flow in the circuit (amps) is reduced to a minimum) created between electrodes **7** and **8**.

Laser energy prevents discharge of the ionised gasses and provides additional energy input into the molecular destabilisation process which occurs at resonance. It is preferable that the ionised gasses be subjected to laser (photonic energy) activation prior to their introduction into the zone(s); although, for example, a fibre optic conduit may be useful to channel photonic energy directly into the zone. However, heat generated in the zone may affect the operability of such an alternate configuration. The electrical polarisation of the water molecule and a resonant condition occurs to destabilise the molecular bonding of the hydrogen and oxygen atoms. Combustion energy is then released by spark ignition.

To ensure proper flame projection and subsequent flame stability, pumps for the ambient air, non-combustible gas and water, introduce these components to the injector under static pressure up to and beyond 125 pounds per square inch.

Flame temperature is regulated by controlling the volume flow-rate of each fluid-media in direct relationship to applied voltage intensity. To elevate flame temperature, fluid displacement is increased while the volume flow rate of non-combustible gasses is maintained or reduced and the applied voltage amplitude is increased. To lower flame temperature, the fluid flow rate of non-combustible gasses is increased and pulse voltage amplitude is lowered. To establish a predetermined flame temperature, the fluid media and applied voltage are adjusted independently. The flame-pattern is further maintained as the ignited, compressed, and moving gasses are projected under pressure from the nozzle ports in distribution disc assembly **4** and the gas expands in the zone and is ignited.

In the voltage zone, several functions occur simultaneously to initiate and trigger thermal energy yield. Water mist droplets are exposed to high intensity pulsating voltage fields in accordance with an electrical polarisation process which separates the atoms of the water molecule and causes the atoms to experience electron ejection. The polar nature of the water molecule which facilitates the formation of minute droplets in the mist, appears to cause a relationship between the droplet size and the voltage required to effect the process, i.e. the greater the droplet size, the higher the voltage required. The liberated atoms of the water molecule interact with laser-primed ionised ambient air gasses to cause a highly energised and destabilised mass of combustible gas atoms to ignite thermally. Incoming ambient air gasses are laser primed and ionised when passing through a gas processor, and an electron extraction circuit (**Fig.5**) captures and consumes in sink **55**, ejected electrons, and prevents electron flow into the resonant circuit.

In terms of performance, reliability and safety, ionised air gasses and water fuel liquid do not become volatile until the fuel mixture reaches the voltage and combustion zones. Injected non-combustible gasses retard and control the combustion rate of hydrogen during gas ignition.

In alternate applications, laser-primed ionised liquid oxygen and laser-primed liquid hydrogen stored in separate fuel tanks, can be used in place of the fuel mixture, or liquefied ambient air gasses alone with water can be substituted as a fuel source.

The injector assembly is design variable and is retro-fittable to fossil fuel injector ports conventionally used in jet/rocket engines, grain dryers, blast furnaces, heating systems, internal combustion engines and the like.

Example 2

A flange-mounted injector is shown in cross-section in **Fig.3** which shows the fuel mixture inlets and illustrates an alternative three-nozzle configuration leading to the polarisation (voltage) and combustion zones in which one nozzle **31a**, **32a** and **33a** is provided for each of the three gas mixtures, and connected to supply lines **31** and **32** (**33** is not shown). Electrical polarisation zone **36** is formed between electrode **38** and surrounding conductive shell **37**. The capacitative element of the resonant circuit is formed when the fuel mixture, acting as a dielectric, is introduced between the conductive surfaces of **37** and **38**. **Fig.3A** is a frontal view of the operative end of the injector.

Example 3

Multiple injectors may be arranged in a gang as shown in **Fig.4** in which injectors **40, 41, 42, 43, 44, 45, 46, 47, 48** and **49** are arranged concentrically in an assembly **50**. Such a ganged array is useful in applications having intensive energy requirements such as jet aircraft engines and blast furnaces.

Example 4

The basic electrical system utilised in the invention is depicted in **Fig.5** showing the electrical polarisation zone **6** which receives and processes the water and gas mixture as a capacitive circuit element in a resonant charging circuit formed by inductors **51** and **52** connected in series with diode **53**, pulsed voltage source **54**, electron sink **55** and zone **6** formed from conductive elements **7** and **8**. In this manner, electrodes **7** and **8** in the injector, form a capacitor which has electrical characteristics dependent on the dielectric media (e.g. the water mist, ionised gasses and non-combustible gasses) introduced between the conductive elements. Within the macro-dielectric media, however, the water molecules themselves, because of their polar nature, can be considered micro-capacitors.

Example 5

Fuel distribution and management systems useful with the injector of this application are described in my co-pending applications for patent; PCT/US90/6513 and PCT/US90/6407.

A distribution block for the assembly is shown in **Fig.6**. In **Fig.6** the distribution block pulses and synchronises the input of the fuel components in sequence with the electrical pulsing circuit. The fuel components are injected into the injector ports in synchronisation with the resonant frequency, to enhance the energy wave pulse extending from the voltage zone through the flame. In the configuration of **Fig.6**, the electrical system is interrelated to distribution block **60**, gate valve **61** and separate passageways **62, 63** and **64** for fuel components. The distributor produces a trigger pulse which activates a pulse-shaping circuit that forms a pulse having a width and amplitude determined by resonance of the mixture and establishes a dwell time for the mixture in the zone to produce combustion..

As in my referenced application regarding control and management and distribution systems for a hydrogen-containing fuel gas produced from water, the production of hydrogen gas is related to pulse frequency on/off time. In the system shown in **Fig.6**, the distributor block pulses the fluid media introduced to the injector in relationship to the resonant pulse frequency of the circuit and to the operational on/off gate pulse frequency. In this manner, the rate of water conversion (i.e. the rate of fuel produced by the injector) can be regulated and the pattern of resonance in the flame controlled.

STANLEY MEYER

Patent WO 92/07861 2nd November 1990 Inventor: Stanley A. Meyer

CONTROL AND DRIVER CIRCUITS FOR A HYDROGEN GAS FUEL PRODUCING CELL

The major difficulty in using Stan's low-current Water Fuel Cell (recently reproduced by Dave Lawton and shown in Chapter 10) is the issue of keeping the cell continuously at the resonant frequency point. This patent application shows the Stan's circuitry for doing exactly that, and consequently, it is of major importance.

ABSTRACT

A control circuit for a capacitive resonant cavity water capacitor cell (**7**) for the production of a hydrogen containing fuel has a resonant scanning circuit co-operating with a resonance detector and PLL circuit to produce pulses. The pulses are fed into the primary transformer (**TX1**). The secondary transformer (**TX2**) is connected to the resonant cavity water capacitor cell (**7**) via a diode and resonant charging chokes (**TX4**, **TX5**).

This invention relates to electrical circuit systems useful in the operation of a Water Fuel Cell including a water capacitor/resonant cavity for the production of a hydrogen containing fuel gas, such as that described in my United States Letter Patent No. 4,936,961 "Method for the Production of a Fuel Gas" issued on 26th June 1990.

In my Letters Patent for a "Method for the Production of a Fuel Gas", voltage pulses applied to the plates of a water capacitor tune into the dielectric properties of the water and attenuate the electrical forces between the hydrogen and oxygen atoms of the molecule. The attenuation of the electrical forces results in a change in the molecular electrical field and the covalent atomic bonding forces of the hydrogen and oxygen atoms. When resonance is achieved, the atomic bond of the molecule is broken, and the atoms of the molecule disassociate. At resonance, the current (amp) draw from a power source to the water capacitor is minimised and voltage across the water capacitor increases. Electron flow is not permitted (except at the minimum, corresponding to leakage resulting from the residual conductive properties of water). For the process to continue, however, a resonant condition must be maintained.

Because of the electrical polarity of the water molecule, the fields produced in the water capacitor respectively attract and repel the opposite and like charges in the molecule, and the forces eventually achieved at resonance are such that the strength of the covalent bonding force in the water molecule (which are normally in an electron-sharing mode) disassociate. Upon disassociation, the formerly shared bonding electrons migrate to the hydrogen nuclei, and both the hydrogen and oxygen revert to net zero electrical charge. The atoms are released from the water as a gas mixture.

In the invention herein, a control circuit for a resonant cavity water capacitor cell utilised for the production of a hydrogen-containing fuel gas is provided.

The circuit includes an isolation means such as a transformer having a ferromagnetic, ceramic or other electromagnetic material core and having one side of a secondary coil connected in series with a high speed switching diode to one plate of the water capacitor of the resonant cavity and the other side of the secondary coil connected to the other plate of the water capacitor to form a closed loop electronic circuit utilising the dielectric properties of water as part of the electronic resonant circuit. The primary coil of the isolation transformer is connected to a pulse generation means. The secondary coil of the transformer may include segments which form resonant charging choke circuits in series with the water capacitor plates.

In the pulse generation means, an adjustable resonant frequency generator and a gated pulse frequency generator are provided. A gate pulse controls the number of the pulses produced by the resonant frequency generator sent to the primary coil during a period determined by the gate frequency of the second pulse generator.

The invention also includes a means for sensing the occurrence of a resonant condition in the water capacitor / resonant cavity, which when a ferromagnetic or electromagnetic core is used, may be a pickup coil on the transformer core. The sensing means is interconnected to a scanning circuit and a phase lock loop circuit, whereby the pulsing frequency to the primary coil of the transformer is maintained at a sensed frequency corresponding to a resonant condition in the water capacitor.

Control means are provided in the circuit for adjusting the amplitude of a pulsing cycle sent to the primary coil and for maintaining the frequency of the pulsing cycle at a constant frequency regardless of pulse amplitude. In addition, the gated pulse frequency generator may be connected to a sensor which monitors the rate of gas production in the cell and controls the number of pulses from the resonant frequency generator sent to the cell in a gated frequency in correspondence with the rate of gas production. The sensor may be a gas pressure sensor in an enclosed water capacitor resonant cavity which also includes a gas outlet. The gas pressure sensor is connected to the circuit to determine the rate of gas production with respect to ambient gas pressure in the water capacitor enclosure.

Thus, a comprehensive control circuit and it's individual components for maintaining and controlling the resonance and other aspects of the release of gas from a resonant cavity water cell is described here and illustrated in the drawings which depict the following:

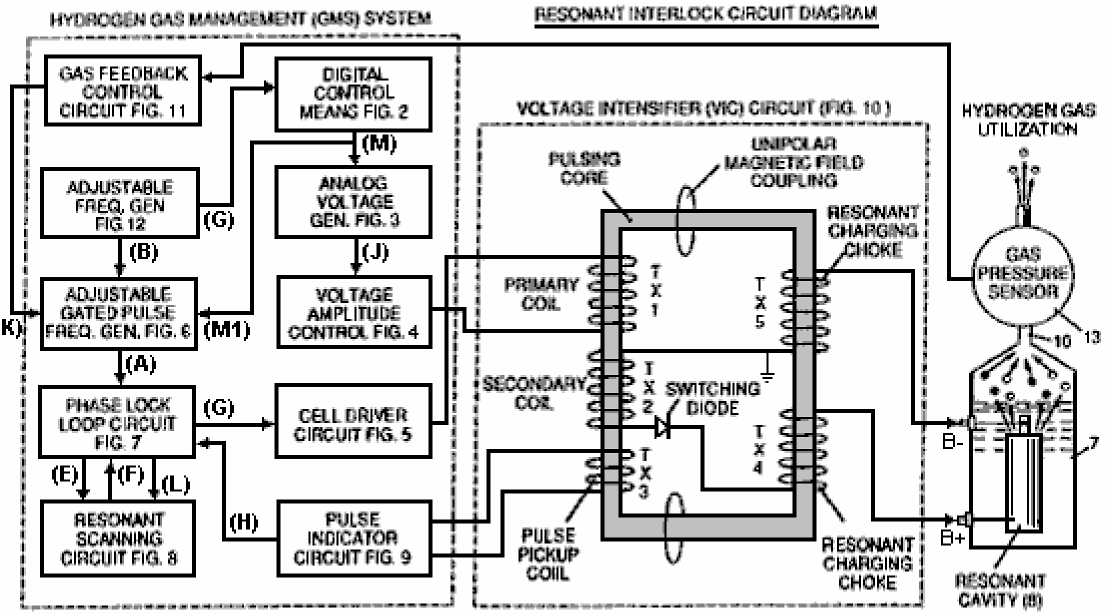

Fig.1 is a block diagram of an overall control circuit showing the interrelationship of sub-circuits, the pulsing core / resonant circuit and the water capacitor resonant cavity.

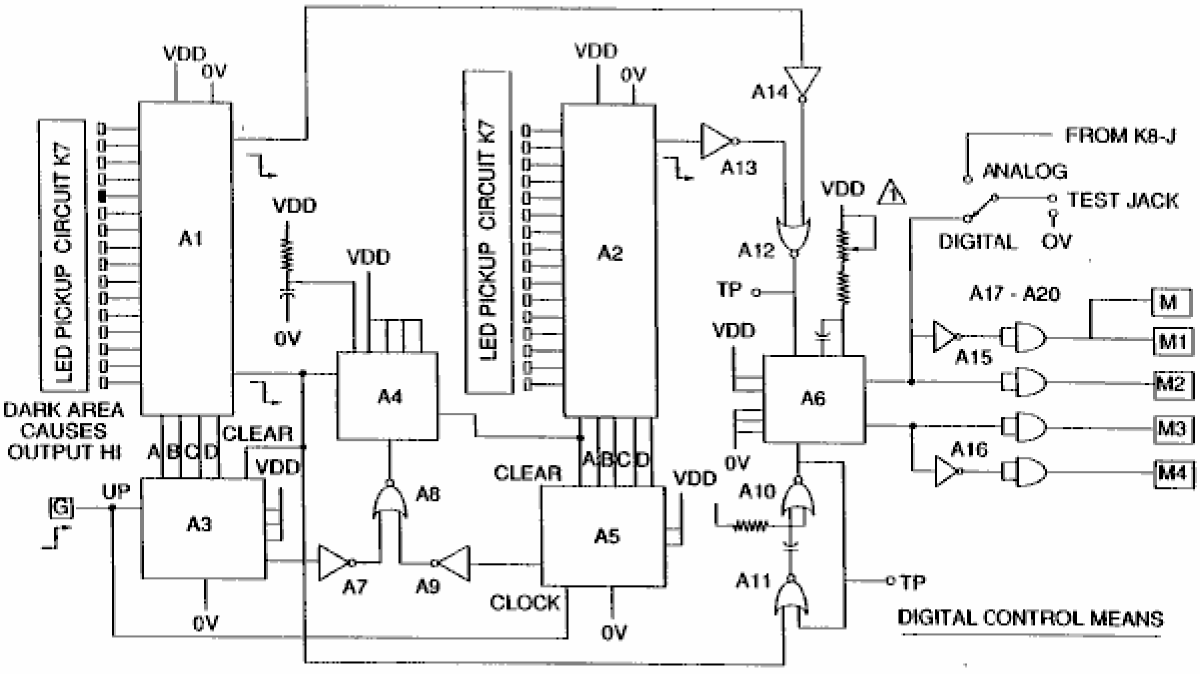

⚠ ON CARD MOUNTING

FIGURE 2

Fig.2 shows a type of digital control circuit for regulating the ultimate rate of gas production as determined by an external input. (Such a control circuit would correspond, for example, to the accelerator in a car, or the thermostat control in a building).

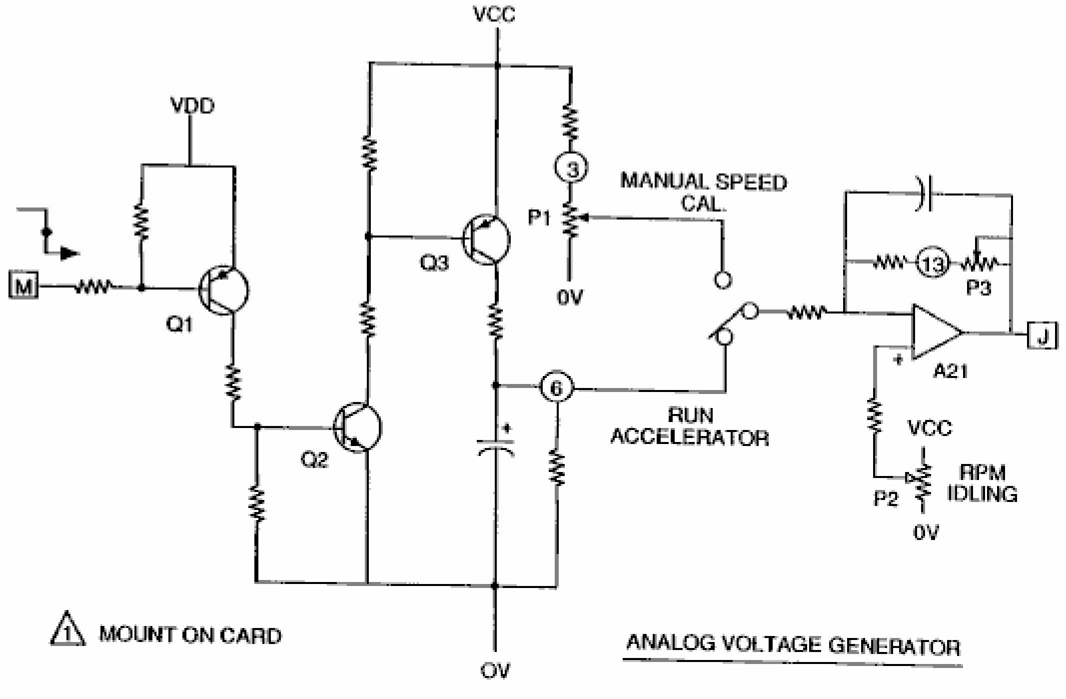

FIGURE 3

Fig.3 shows an analog voltage generator.

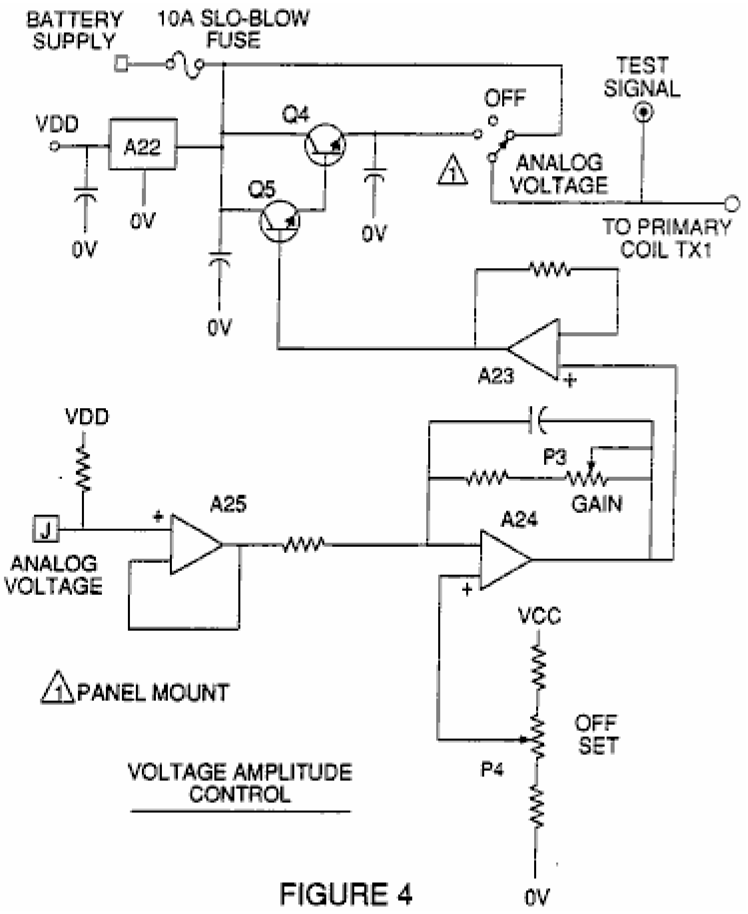

FIGURE 4

Fig.4 is a voltage amplitude control circuit interconnected with the voltage generator and one side of the primary coil of the pulsing core.

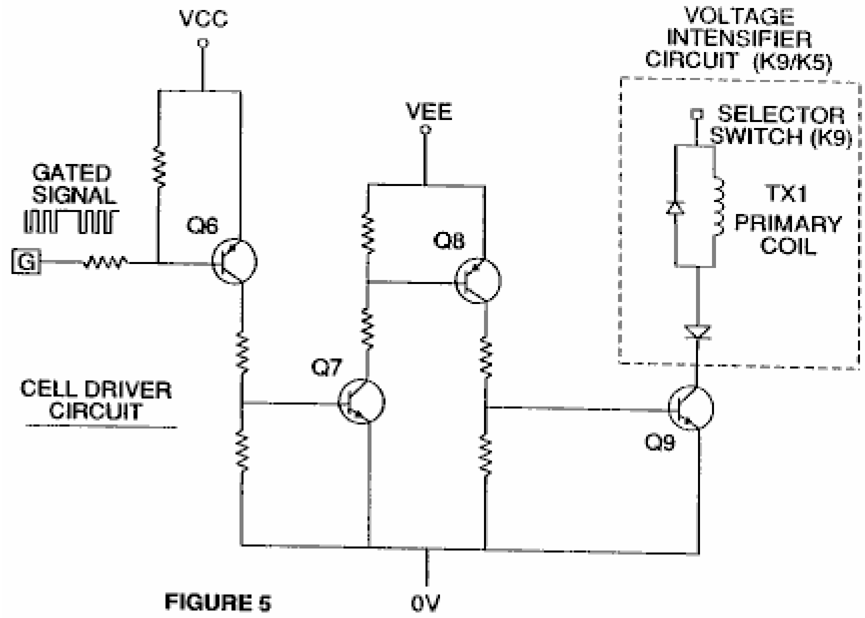

FIGURE 5

Fig.5 is the cell driver circuit that is connected with the opposite side of the primary coil of the pulsing core. **Figures 6 to 9** form the pulsing control circuitry:

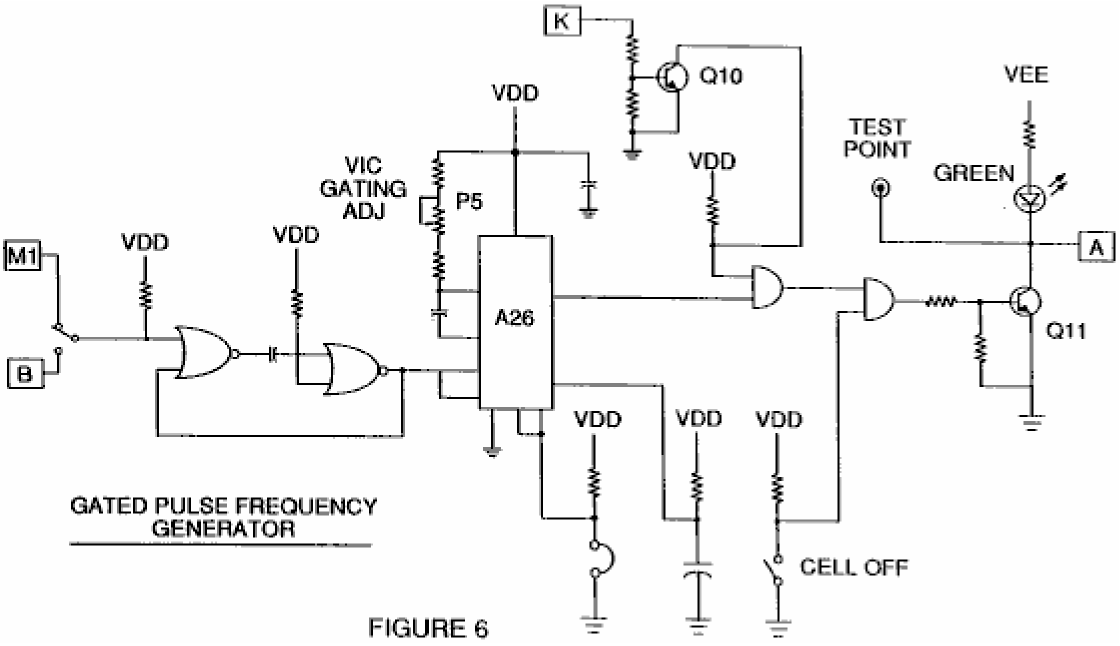

FIGURE 6

Fig.6 is a gated pulse frequency generator.

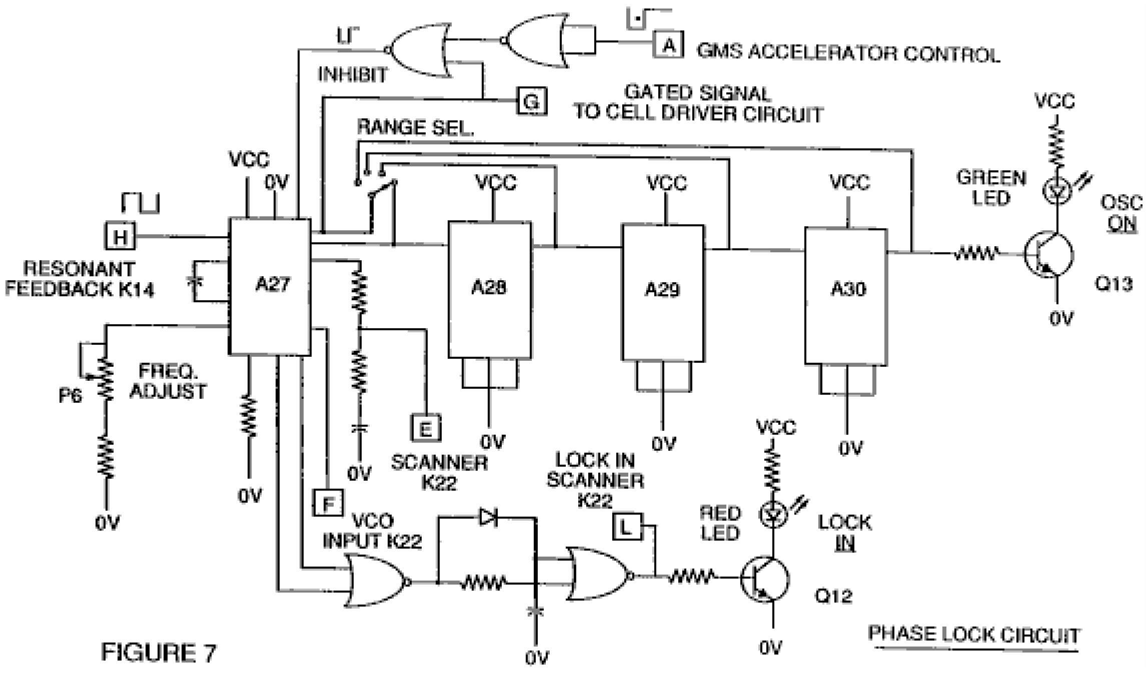

FIGURE 7

Fig.7 is a phase lock circuit.

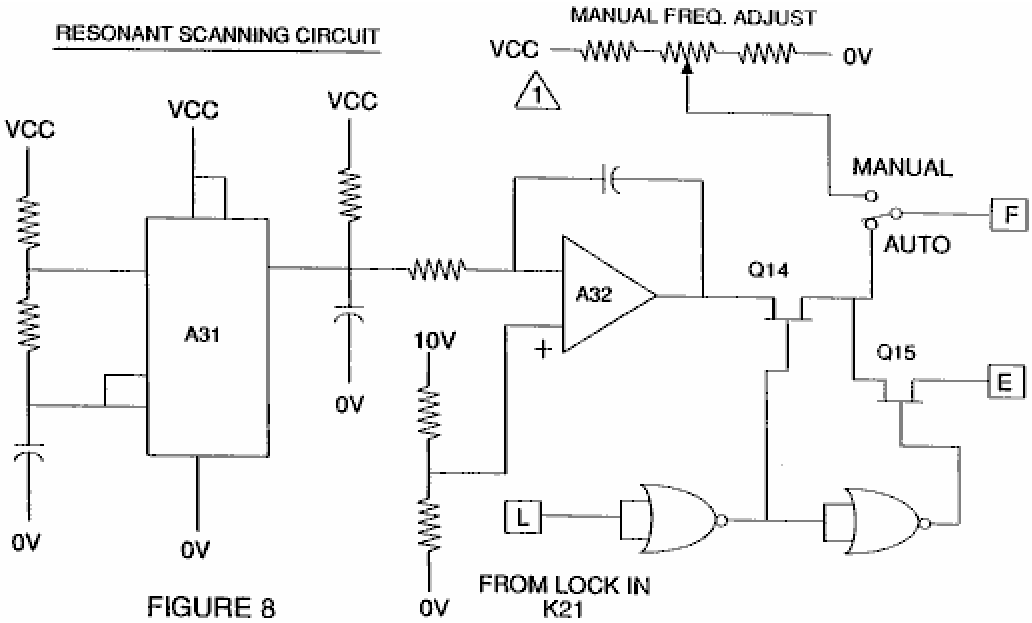

FIGURE 8

Fig.8 is a resonant scanning circuit

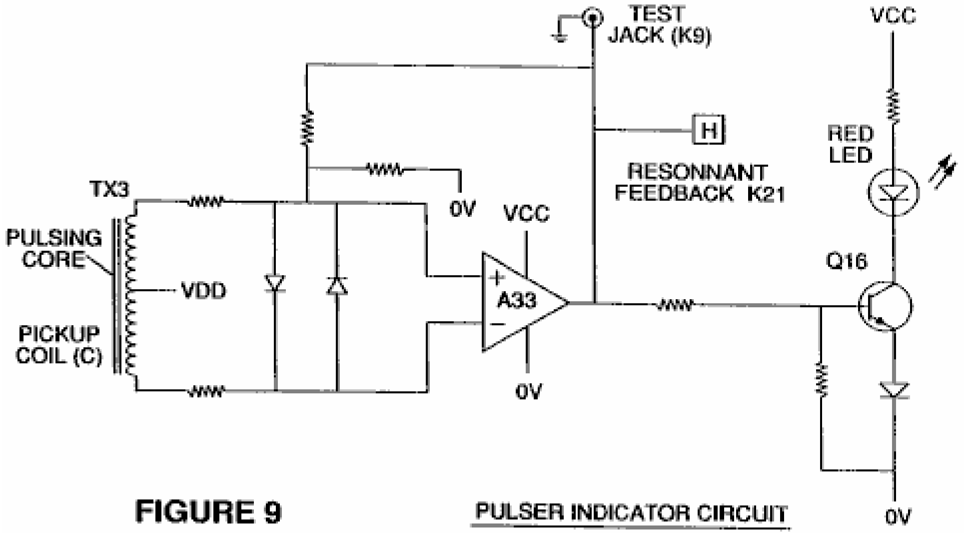

FIGURE 9 PULSER INDICATOR CIRCUIT

Fig.9 is the pulse indicator circuit.

These four circuits control the pulses transmitted to the resonant-cavity / Water Fuel Cell capacitor.

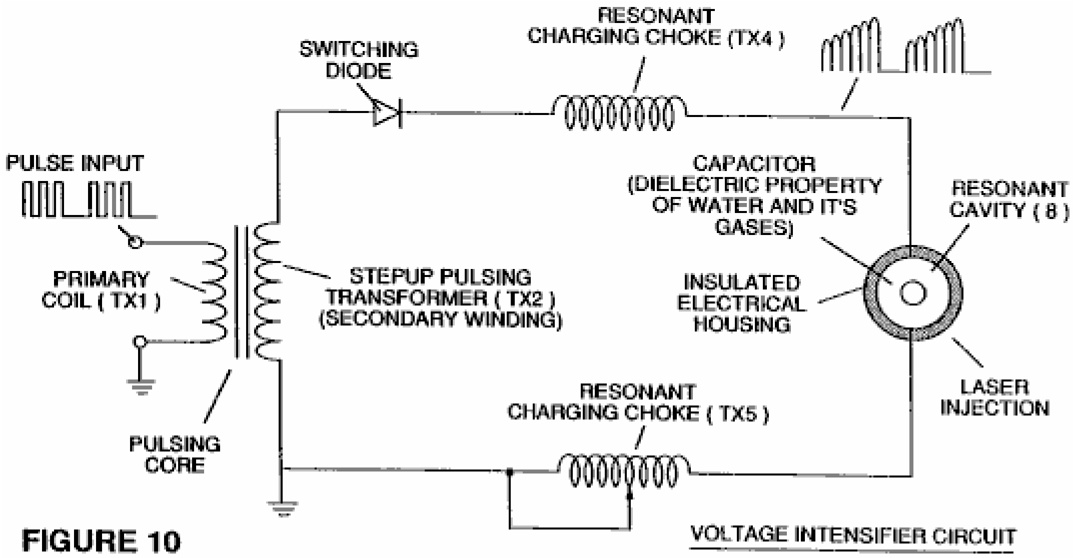

FIGURE 10 VOLTAGE INTENSIFIER CIRCUIT

Fig.10 shows the pulsing core and the voltage intensifier circuit which forms the interface between the control circuit and the resonant cavity.

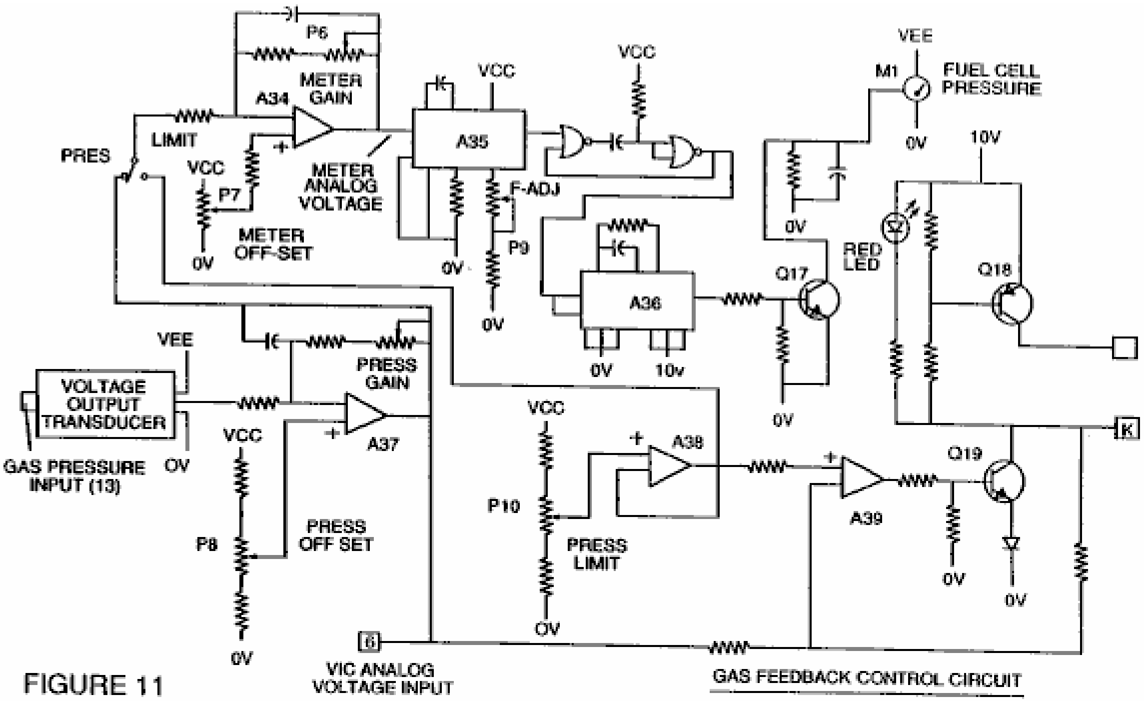

FIGURE 11

Fig.11 is a gas feedback control circuit

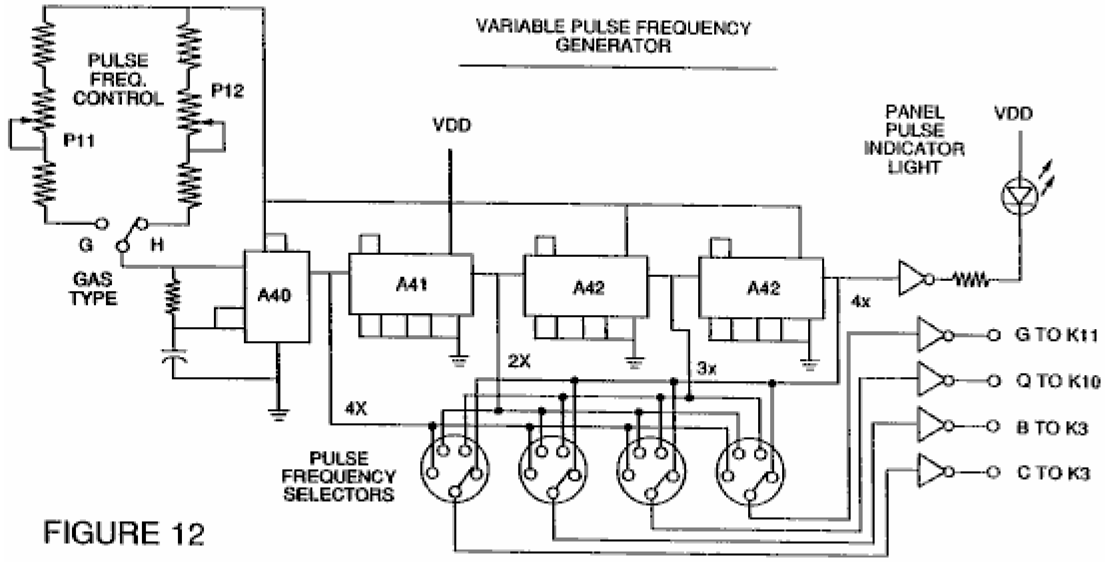

FIGURE 12

Fig.12 is an adjustable frequency generator circuit.

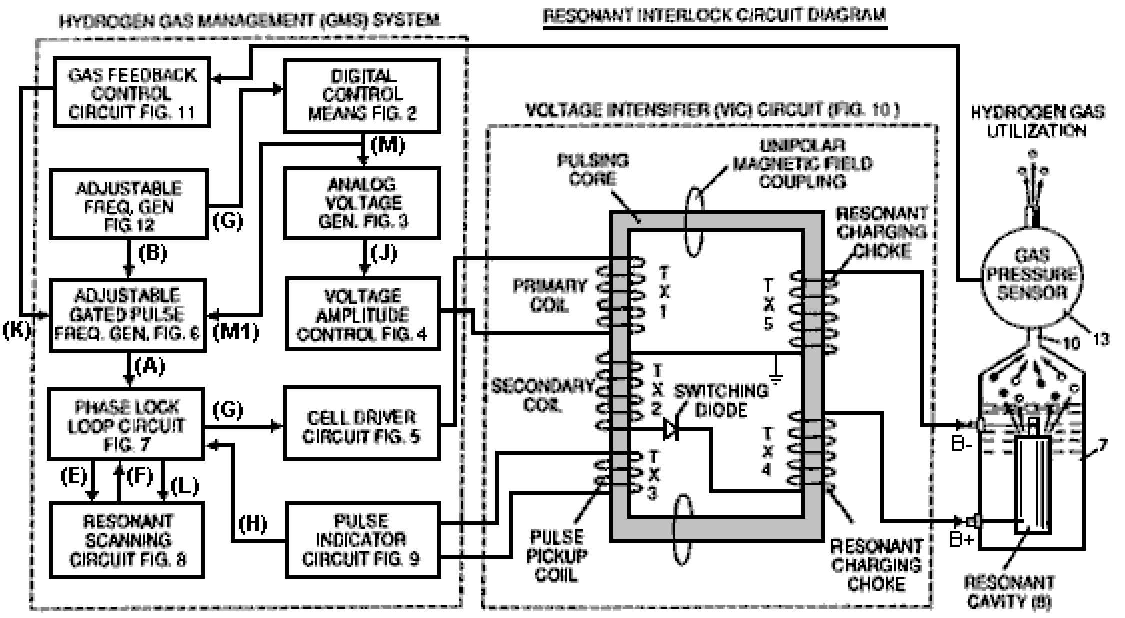

The circuits are interconnected as shown in **Fig.1** and to the pulsing core voltage intensifier circuit of **Fig.10**, which, among other things, isolates the water capacitor electrically so that it becomes an electrically isolated cavity for the processing of water in accordance with it's dielectric resonance properties. By reason of this isolation, power consumption in the control and driving circuits is minimised when resonance occurs, and current demand is minimised as voltage is maximised in the gas production mode of the water capacitor / Fuel Cell.

The reference letters "**A**" through "**M**" and "**M1**" show, with respect to each separate circuit shown, the point at which a connection in that circuit is made to another of the circuits shown.

In the invention, the water capacitor is subjected to a duty pulse which builds up in the resonant charging choke coil and then collapses. This occurrence allows a unipolar pulse to be applied to the Fuel Cell capacitor. When a resonant condition of the circuit is locked-in by the circuit, current leakage is held to a minimum as the voltage which creates the dielectric field tends to infinity. Thus, when high voltage is detected upon resonance, the phase-lock-loop circuit, which controls the cell driver circuit, maintains the resonance at the detected (or sensed) frequency.

The resonance of the water capacitor cell is affected by the volume of water in the cell. The resonance of any given volume of water contained in the water capacitor cell is also affected by "contaminants" in the water which act as a damper. For example, with a potential difference of 2,000 to 5,000 volts applied to the cell, a current spike or surge may be caused by inconsistencies in the water characteristics which cause an out-of-resonance condition which is remedied instantaneously by the control circuits.

In the invention, the adjustable frequency generator, shown in **Fig.12**, tunes in to the resonant condition of the circuit which includes the water cell and the water inside it. The generator has a frequency capability of 0 to 10 KHz and tunes into resonance typically at a frequency of 5 KHz in a typical 3-inch long water capacitor formed from a 0.5 inch rod inside a 0.75 inch inside-diameter cylinder. At start up, in this example, current draw through the water cell will measure about 25 milliamps; however, when the circuit finds a tuned resonant condition, the current drops down to a 1 to 2 milliamp leakage condition.

The voltage to the capacitor water cell increases according to the turns of the winding and the size of the coils, as in a typical transformer circuit. For example, if 12 volts is sent to the primary coil of the pulsing core and the secondary coil resonant charging choke ratio is 30 to 1, then 360 volts is sent to the capacitor water cell. The number of turns is a design variable which controls the voltage of the unipolar pulses sent to the capacitor.

The high-speed switching diode, shown in **Fig.10**, prevents charge leaking from the charged water in the water capacitor cavity, and the water capacitor as an overall capacitor circuit element, i.e. the pulse and charge status of the water/capacitor never pass through an arbitrary ground. the pulse to the water capacitor is always unipolar. The water capacitor is electrically isolated from the control, input and driver circuits by the electromagnetic coupling through the core. The switching diode in the Voltage Intensifier Circuit (**Fig.10**) performs several functions in the pulsing. The diode is an electronic switch which determines the generation and collapse of an electromagnetic field to permit the resonant charging choke(s) to double the applied frequency and it also allows the pulse to be sent to the resonant cavity without discharging the "capacitor" therein. The diode is, of course, selected in accordance with the maximum voltage encountered in the pulsing circuit. A 600 PIV ("Peak Inverse Volts") fast switching diode, such as an NVR 1550, has been found to be useful in this circuit.

The Voltage Intensifier Circuit of **Fig.10** also includes a ferromagnetic or ceramic ferromagnetic pulsing core capable of producing electromagnetic flux lines in response to an electrical pulse input. The flux lines affect both the secondary coil and the resonant charging choke windings equally. Preferably, the core is of a closed loop construction. The effect of the core is to isolate the water capacitor and to prevent the pulsing signal from going below an arbitrary ground and to maintain the charge of the already charged water and water capacitor.

In the pulsing core, the coils are preferably wound in the same direction to maximise the additive effect of the electromagnetic field in them. The magnetic field of the pulsing core is synchronised with the pulse input to the primary coil. The potential from the secondary coil is introduced to the resonant charging choke(s) series circuit elements which are subjected to the same synchronous applied electromagnetic field, simultaneously with the primary pulse.

When resonance occurs, control of the gas output is achieved by varying the time of duty gate cycle. The transformer core is a pulse frequency doubler. In a figurative explanation of the workings of the fuel gas generator water capacitor cell, when a water molecule is "hit" by a pulse, electron time-share is effected and the molecule is charged. When the time of the duty cycle is changed, the number of pulses that "hit" the molecules in the fuel cell is modified correspondingly. More "hits" result in a greater rate of molecular disassociation.

With reference to the overall circuit of **Fig.1**, **Fig.3** receives a digital input signal, and **Fig.4** shows the control circuit which applies 0 to 12 volts across the primary coil of the pulsing core. Depending on design parameters of primary coil voltage and other factors relevant to core design, the secondary coil of the pulsing core can be set up for a predetermined maximum, such as 2,000 volts.

The cell driver circuit shown in **Fig.5**, allows a gated pulse to be varied in direct relation to voltage amplitude. As noted above, the circuit of **Fig.6** produces a gate pulse frequency. The gate pulse is superimposed on the resonant frequency pulse, to create a duty cycle that determines the number of discrete pulses sent to the primary coil. For example, assuming a resonant pulse of 5 KHz, a 0.5 KHz gating pulse with a 50% duty cycle, will allow 2,500 discrete pulses to be sent to the primary coil, followed by an equal time interval in which no pulses are passed through. The relationship of resonant pulse to the gate pulse is determined by conventional signal addition/subtraction techniques.

The phase lock loop circuit shown in **Fig.7** allows the pulse frequency to be maintained at a predetermined resonant condition sensed by the circuit. Together, the circuits of **Fig.7** and **Fig.8**, determine an output signal to the pulsing core until the peak voltage signal sensed at resonance is achieved.

A resonant condition occurs when the pulse frequency and the voltage input attenuates the covalent bonding forces of the hydrogen and oxygen atoms of the water molecule. When this occurs, current leakage through the water capacitor is minimised. The tendency of voltage to maximise at resonance, increases the force of the electric potential applied to the water molecules, which ultimately disassociate into atoms.

Because resonances of different waters, water volumes and capacitor cells vary, the resonant scanning circuit of **Fig.8** scans frequency from high to low and back to high, until a signal lock is achieved. The ferromagnetic core of the voltage intensifier circuit transformer, suppresses electron surge in an out-of-resonance condition of the fuel cell. In an example, the circuit scans at frequencies from 0 Hz to 10 KHz and back to 0 Hz. In water having contaminants in the range of 1 part per million to 20 parts per million, a 20% variation in resonant frequency is encountered. depending on water flow rate into the fuel cell, the normal variation range is about 8% to 10%. For example, iron in well water affects the status of molecular disassociation. Also, at a resonant condition, harmonic effects occur. In a typical operation of the cell with a representative water capacitor described below, at a frequency of about 5 KHz, with unipolar pulses from 0 to 650 volts, at a sensed resonant condition in the resonant cavity, on average, the conversion into gas occurs at a rate of about 5 US gallons (19 litres) of water per hour. To increase the rate, multiple resonant cavities can be used and/or the surfaces of the water capacitor can be increased, however, the water capacitor cell is preferably small in size. A typical water capacitor may be formed from a 0.5 inch diameter stainless steel rod and a 0.75 inch inside-diameter cylinder which extends over the rod for a length of 3 inches.

The shape and size of the resonant cavity may vary. Larger resonant cavities and higher rates of consumption of water in the conversion process require higher frequencies up to 50 KHz and above. The pulsing rate, to sustain such high rates of conversion, must be increased correspondingly.

From the above description of the preferred embodiment, other variations and modifications of the system disclosed will be evident to those skilled in the art.

CLAIMS

1. A control circuit for a resonant cavity water capacitor cell utilised for the production of a hydrogen- containing fuel gas, including an isolation transformer with a ferromagnetic core, and having one side of a secondary coil connected in series with a high-speed switching diode to one plate of the water capacitor of the resonant cavity, and the other side of the secondary coil connected to the other plate of the water capacitor, to form a closed-loop electronic circuit utilising the dielectric properties of water as part of the electronic circuit, and a primary coil connected to a pulse generator.

2. The circuit of Claim 1. in which the secondary coil includes segments which form a resonant charging choke circuit in series with the water capacitor.

3. The circuit of Claim 1. in which the pulse generator includes an adjustable first frequency generator and a second gated pulse frequency generator which controls the number of pulses produced by the first frequency generator, sent to the primary coil during a period determined by the gate frequency of the second pulse generator.

4. The circuit of Claim 1. further including a means for sensing the occurrence of a resonant condition in the water capacitor of the resonant cavity.

5. The circuit of Claim 4. in which the means for sensing is a pickup coil on the ferromagnetic core of the transformer.

6. The circuit of Claim 4. or Claim 5. in which the sensing means is interconnected to a scanning circuit and a phase-lock-loop circuit, by which the pulsing frequency sent to the primary coil of the transformer is maintained at a sensed frequency corresponding to a resonant condition in the water capacitor.

7. The circuit of Claim 1. including means for adjusting the amplitude of a pulsing cycle sent to the primary coil.

8. The circuit of Claim 6. including further means for maintaining the frequency of the pulsing cycle at a constant frequency regardless of pulse amplitude.

9. the circuit of Claim 3. in which the gated pulse frequency generator is connected to a sensor which monitors the rate of gas production from the cell and controls the number of pulses sent to the cell in a gated frequency, corresponding to the rate of gas production.

10. The circuit of Claim 7. or Claim 8. or Claim 9. further including a gas-pressure sensor in an enclosed water capacitor resonant cavity which also includes a gas outlet, where the gas-pressure sensor is connected to the circuit to determine the rate of gas production with respect to ambient gas pressure in the water capacitor enclosure.

11. The methods and apparatus as substantially described herein.

STEPHEN MEYER

Patent application US 2005/0246059 3rd November 2005 Inventor: Stephen F. Meyer

MLS-HYDROXYL FILLING STATION

This is a patent application from Stephen Meyer, brother of the late Stan Meyer. While this application mentions filling stations, it is clear that the design is aimed at use in vehicles with internal combustion engines. I believe that the impedance-matching interface between the alternator and the cell electrodes is particularly important. The water-splitter cell uses sets of three pipes in a concentric array which results in small gaps between the innermost, middle and outer pipe. Stephen refers to these three electrode pipes as a "wave-guide", so please bear that in mind when reading this patent application. Stephen uses the word "hydroxyl" to refer to the mixture of hydrogen and oxygen gases produced by electrolysis of water. Other people use the word "hydroxy" to describe this mixture, so they should be considered interchangeable.

The operation of this system as described here, calls for the generating power to be removed when the gas pressure in the generating chambers reaches 5 psi. The gas is then pumped into a pressure chamber where the pressure ranges from 40 psi to 80 psi, at which point the compressor is powered down and the excess gas vented to some external storage or using device. It is not until this is completed that the power is applied again to the generating chambers. May I remark that, in my opinion, there is no need to remove the power from at generating chambers at any time when this system is in operation, since all that that does is to lower the generating capacity, unless of course, the production rate is so high that it exceeds the level of demand.

ABSTRACT

The usefullness of this system, it's configuration, design and operation, are the keystone of a new type of automation: the production of hydroxyl gases from renewable sources.

BACKGROUND OF THE INVENTION

Fuel Cell and auto industries have been looking for methods and apparatus that can supply a source of hydrogen and oxygen for its new hybrid industry. This invention is such a device.

SUMMARY OF THE INVENTION

The invention is a computerised, automatic, on-site/mobile hydroxyl gas producing filling station which allows the products being produced to be used, either by the hydrogen fuel cells installed in automobiles, trucks, buses, boats and land-based generating applications, or in any internal combustion engine.

BRIEF DESCRIPTION OF THE DRAWINGS

Fig.1 shows the configuration of the components which go to make up the MLS-hydroxyl Filling Station.

Fig.2 shows the software display which the operator uses to monitor and control the production of hydroxy gases and heat.

Fig.3 shows the methods, configuration, and apparatus used in the hydroxyl producing cell system **120**.

Fig.4 shows the electronic impedance-matching circuits **102**, connected between the dual three-phase synchronised generators (**110A** and **110B** in **Fig.3**) and each of the electrodes or "waveguide" arrays **132** in cell **120** of **Fig.3**. Note that only generator **A** is depicted in **Fig.4** as being connected to arrays **A**, **B** and **C** using PC cards **1 to 3**. generator **B** is connected to arrays **D**, **E** and **F** using cards **4 to 6**.

Fig.5 Shows the signals emitted by each of the impedance-matching circuits (**102** in **Fig.4** mounted on cards **1 to 6**) which are applied to each of the cylinder arrays (**132** in **Fig.3**) installed in hydroxyl cell **120**. These sets of signals with their offset phase relationship, frequencies and amplitudes, are the driving forces producing the hydroxy gases in cell **120** of **Fig.3**.

Fig.6 shows the high-frequency ringing signal which is produced between points **T1** and **T2** in the impedance-matching circuit **102** in **Fig.4**. It is this ringing which enhances the production of the hydroxyl gas in cell **120** of **Fig.3**.

DETAILED DESCRIPTION OF THE DRAWINGS

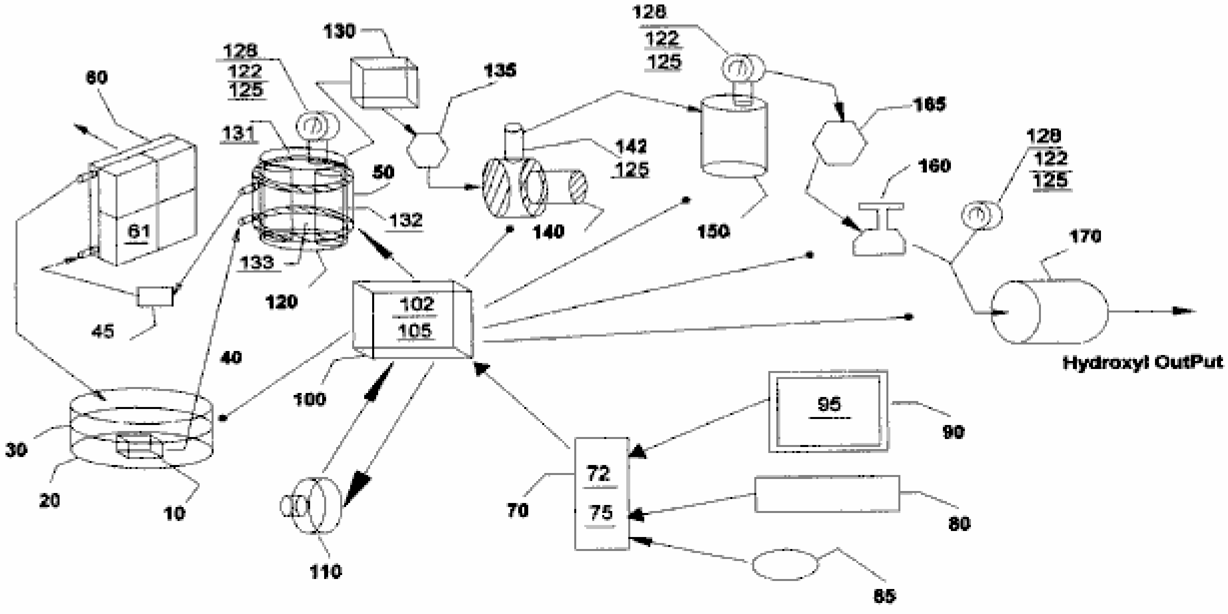

MLS- Hydroxyl Filling Station (MLS-HFS)

Fig 1

The heat-removing section in **Fig.1** consists of a liquid bath **30** and its container **20**, a liquid circulating pump **10**, conveying-conduits **40**, cooling chamber 50 attached to hydroxyl generating cell **120**, filter **45**, radiator **60** and cooling fans **61** attached to it.

The automatic-control section in **Fig.1** consists of a computer **70**, software program **75**, video monitor **90** and it's graphic operator display **95** (**Fig.2**), pointer **85**, keyboard **80**, interface card **72**, and Input/Output controller **100** with it's driver electronics cards **102** and **105**.

Dual three-phase power sources **110** and impedance-matching circuits **102**, provide the power needed to drive the hydroxyl cell **120**.

The remaining apparatus is used to convey the gases from cells **120**, through liquid trap **130**, through gas flow restriction valve **135**, elevate its gas pressures through compressor **140**, transfer them to storage tank **150**, then deliver the gases through safety cut off **165**, regulators **160** and through flash-back arrestor **170** for external delivery.

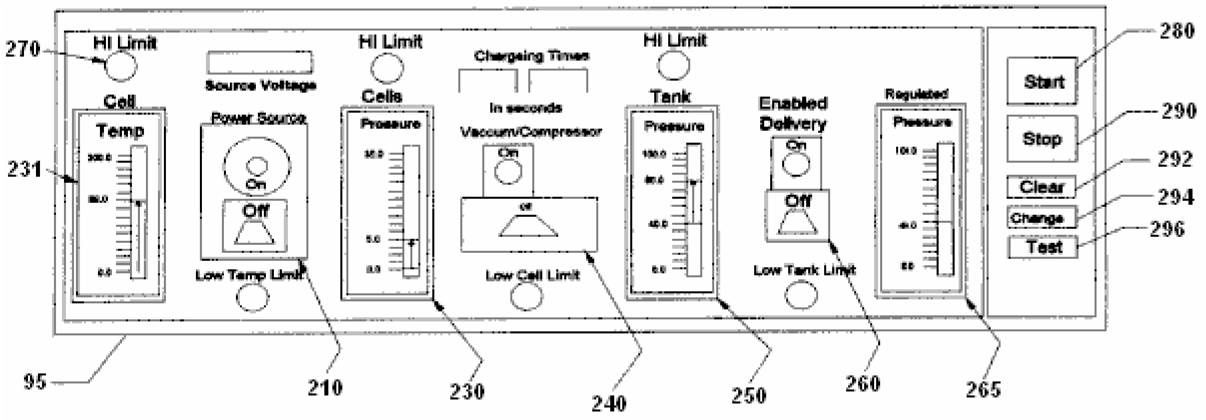

MLS-Hydroxyl Filling Station (MLS-HFS) Graph Display and Operator Control

Fig-2

Fig.2 shows the layout and functions of the operator control display **95** of program **75** in **Fig.1**. It consists of cell temperature indicator **230**, vacuum controller **240**, high-pressure tank indicator **250**, delivery controller **260**, delivery regulated-pressure indicator **265** and related alarm/status indicators **270**. Also, software control buttons are provided to start **280**, stop **290**, clear data **292**, change setting **294** and the testing of equipment and their sequences **296**.

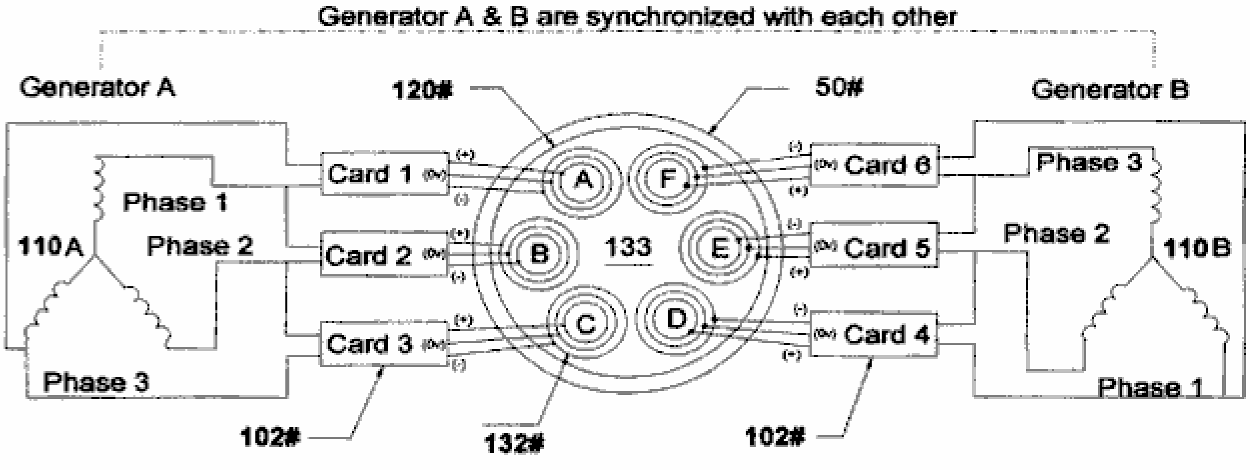

Configuration of Hydroxyl gas producting appartuses

Fig-3

Fig.3 shows the configuration of our proprietary hydroxyl-producing apparatus **120** consisting of dual three-phase power source **110**, impedance matching electronic circuits **102** and gas converter devices **132** submerged in a bath of water **133** in cell **120**. The drawing also shows the water jacket **50** surrounding the cell **120** that helps lower its temperature and allows more production of the hydroxyl gases at higher voltage signals as shown in **Fig.5**.

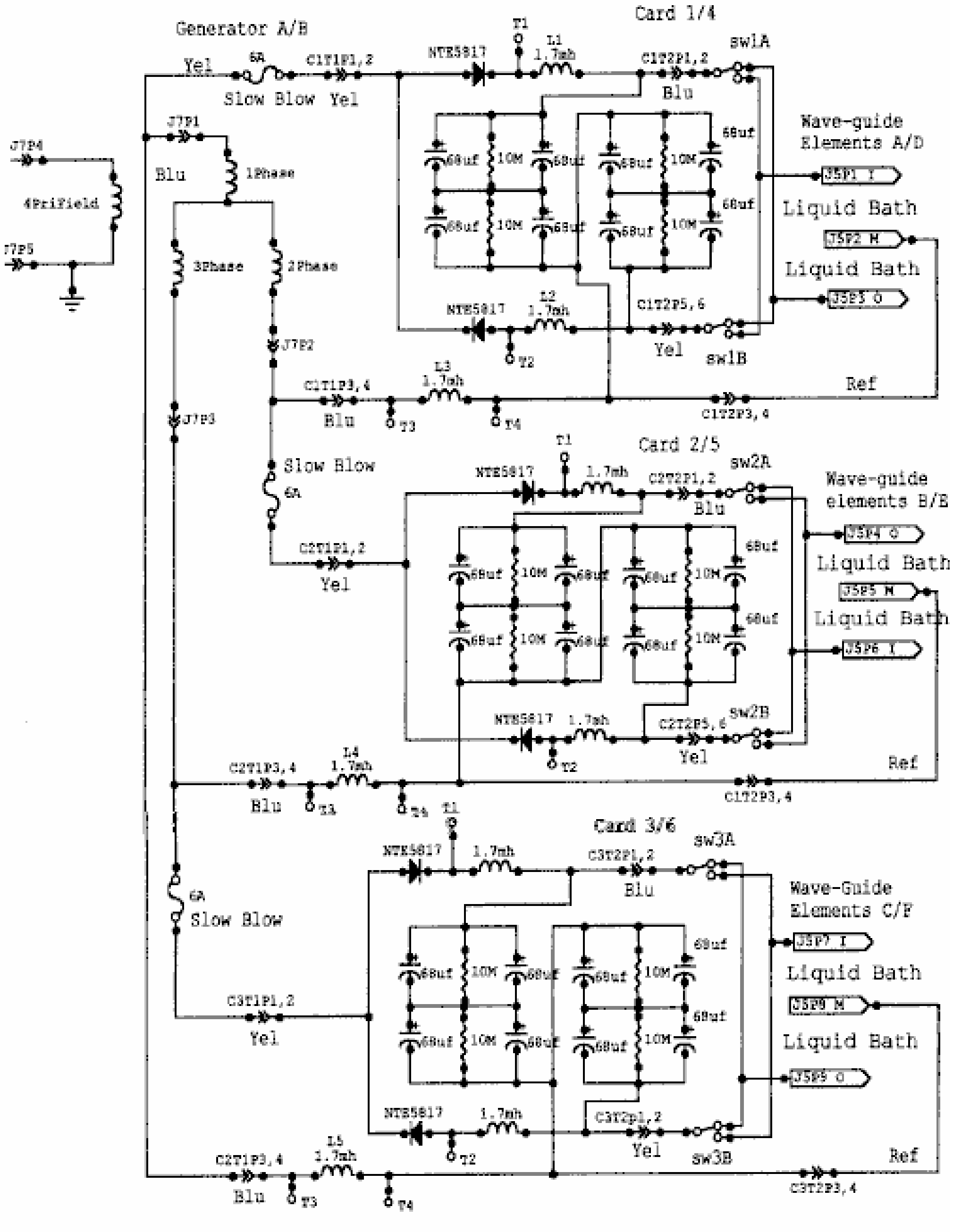

Impedance matching circuits 102

Fig-4

Fig.4 shows the electrical circuits **102**, used to drive the gas converting arrays (**132** in **Fig.3**) submerged in a bath of water **133** in cell **120**. **Fig.4** shows three identical circuits connected to each of the three-phase signals from one half of the dual three-phase generator **110A** in **Fig.3**. The circuits **102,** convert the AC signal from each phase of **110** into a modulated signal as depicted by **Fig.5**. These signals are then coupled to the triple array elements **132**, (Inside, Middle and Outside) by alternating the connection between the Inside and Outside elements of the arrays (**132** in **Fig.3**).

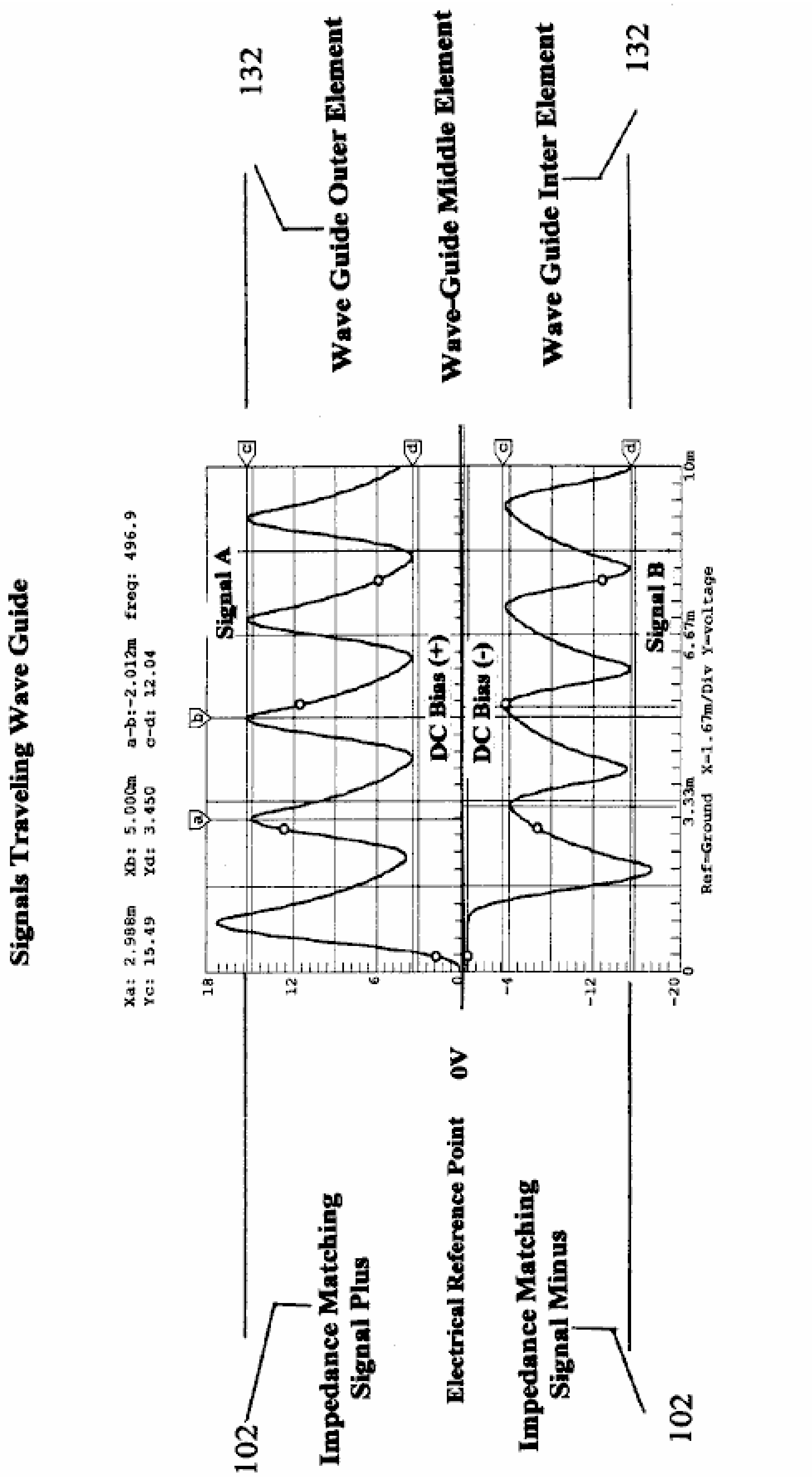

FIG-5

Fig.5 shows the composite signals applied to each of the arrays (**132** in **Fig.3**) submerged in the water bath **133** in cell **120**, and indicates the differential voltages used in the hydroxyl producing process. Note that the Middle wave-guide element is used as the electrical reference point for both the Outside and Inside elements of array **132**. It is this composite signal applied to the surface of the stainless steel elements in array **132** submerged in water bath **133**, heat allows the ions from the elements in array **132** to cross its water surface barriers **133** and contribute to the hy-droxyl production. Note the DC bias voltage +,- on either side of the centre electrical reference point 0V. It is this bias voltage being modulated by multi-polarity differential signals from **102**, that contributes to the wave-guide action of arrays **132**. Also, the frequency of the waveform shown in **Fig.5** is adjusted to match the electrical wavelength of the arrays **132** of **Fig.3** and the impedance of water bath **133**.

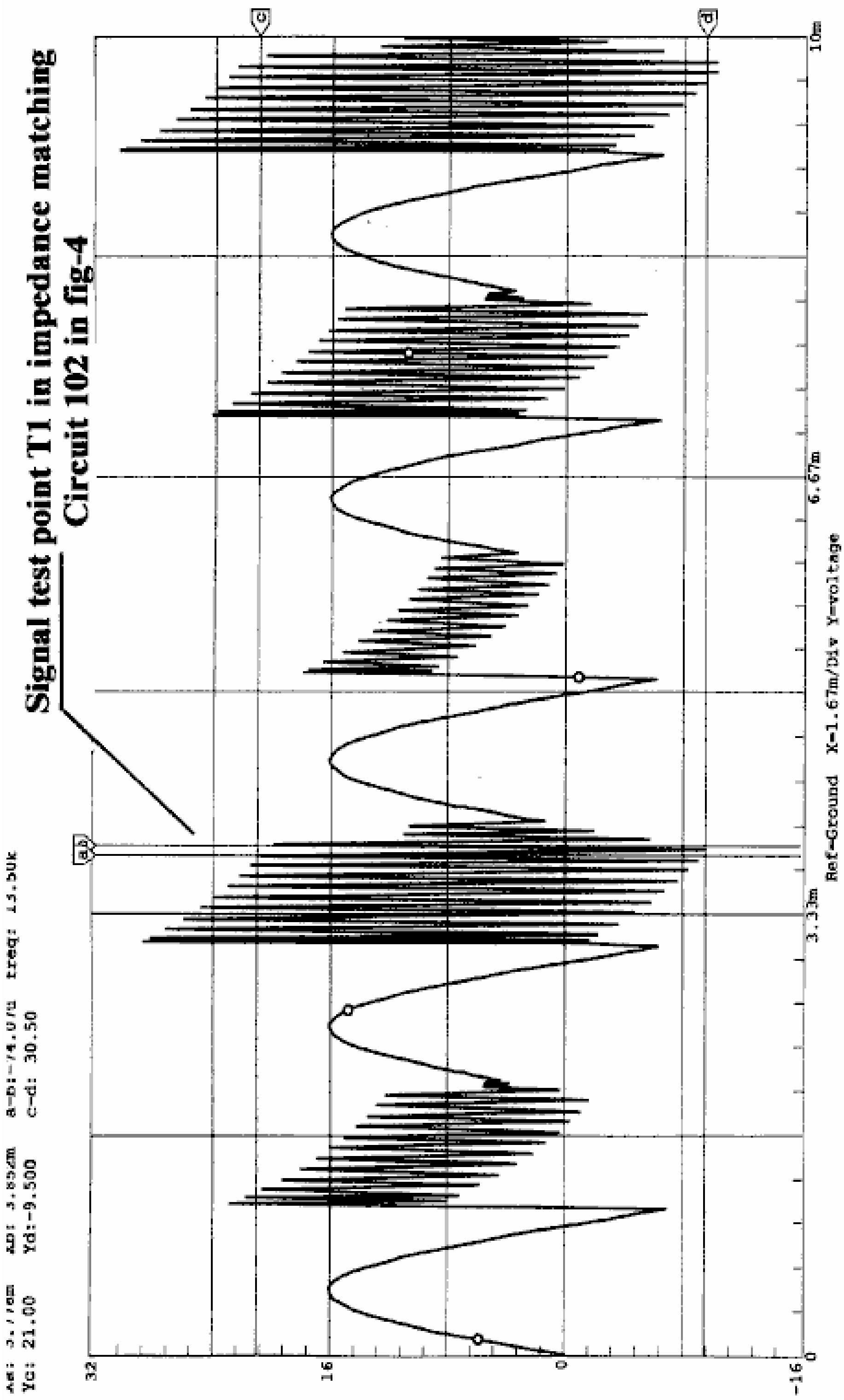

FIG-6

Fig.6 shows the high-frequency ringing signals which contribute to the operation of the hydroxyl production. just as a tuning fork rings when struck by a hammer, so do the wave-guide elements in array **132** immersed in the hydroxyl-generating liquid **133** when struck by the electrical signals shown in **Fig.5** and **Fig.6**, coming from the impedance-matching circuits **102** shown in **Fig.4**.

Brief Description of Sequences

This invention is a computerised Hydroxyl Gas producing filling station "**MLS-HFS**" designed to provide automatic control of its on-site gas production and delivery.

The MLS-HFS shown in **Fig.1**, is a hydroxyl gas and heat generating system which uses a renewable source of liquid supply **30** such as water. It uses a computer control program **75** with display interface **95**, for the monitoring, adjusting and controlling of the electronic and hardware apparatus and process logic. The electronic circuits **102** mounted in driver **100**, control the production of the gases and heating while circuit **105** controls the process and routeing of the hydroxyl gas.

The system consists of a low-pressure hydrolyser cell **120** in **Fig.1**, a liquid trap **130**, an adjustable flow-restriction valve **135**, high-pressure vacuum pump **140**, and check valve **142** installed in **140**. It also contains a high-pressure storage tank **150**, an alarm/low-pressure cut-off valve **165**, gas regulator **160**, flashback arrestor **170**, over-pressure safety release valves **125**, pressure gauges **128**, analogue pressure-sending units **122** installed on cell **120**, and tank **150** at the regulating side of regulator **160**. Also, **125** is installed on Compressor **140** high-pressure output. The computer controller **70**, monitor **90**, keyboard **80**, interface I/O card **72** and software position pointer **85**, are used to control the production process, using electronic driver **100** through it's PC boards **105** and their attached control devices. The power to the cell-driving circuits **102**, installed in driver **100**, is supplied from a dual three-phase isolated power source **110**. The amplitude, signal phases and frequency from this power source is controlled by signal adjustments coming from the computer **70**.

Detailed Description

Sequence of Operation

The system shown in **Fig.1** is monitored and controlled by the software program **75**, computer **70**, monitor **90**, keyboard **80**, pointer **85**, and display interface **95** in **Fig.2**.

The software program has five main functions, namely: to purge the system of ambient air, check and test for any equipment malfunctions, prepare the system for production, monitor and control the current activities of the production process, and the safety shutdown of the system if alarms are detected.

During the initial installation, and again after any repairs, the total system is purged using the vacuum pump **140**, using manual procedures to ensure that all ambient air has been removed from the system. Before the system is put into service, the operator can test the operation of the system by using the graphic display. The main functions of the testing is to ensure that the temperature electronics **131** attached to the hydroxyl cells **120**, transferring compressor **140** and analogue pressure sensors **122** mounted on cells **120**, high-pressure tank **150** and the discharge side of regulator **160** used for control and monitoring, are working properly. the operator can then activate the Run Sequence of the program **75** via the start software button **280** in **Fig.2** on graphic display **95**.

During the initial startup phase of the system, the computer program will configure the system for the purge sequence. this sequence allows the vacuum pump **140** to draw down the hydroxyl cells **120** liquid trap **130** coupled to flow-restriction valve **135**, to remove all ambient air from them. Once the program has done this and detected no leaks in the system, it then prepares the system for gas production by switching the gas flow from cells **120** to high-pressure tank **150** and on to the output flashback protector **170**.

The program starts it's production sequence by turning on the cooling system pump **10** which is submerged in the liquid bath **30**, contained in vessel **20**. The cooling liquid is pumped through the cooling jacket **50** which is attached to the outside of cells **120**, through filter **45** and then through an air-cooled radiator **60**. Fans attached to the radiator are turned on for cooling.

Next, the computer turns on the dual three-phase power source **110**, which supplies operating power to the frequency, phase-shifting, signal amplitude and impedance-matching circuits coupled to the hydroxyl generating cells.

The result of this is just like the operation of a radio transmitter matching it's signal to the air via the antenna impedance. **Fig.3** shows the relationship of this configuration to arrays **132**, water bath **133** and Signals (**Fig.5** and **Fig.6**).

While the power source **110** is operating, the computer **70** is monitoring the pressure **122** and temperature **131** of hydroxyl cells **120**. When the cell pressure reaches a typical level of **5** pounds per square inch, the power source is turned off and compressor **140** is turned on the pump the gas into pressure tank **150**. When the pressure in the hydroxyl cells **120** is drawn down to near zero, the compressor is turned off and the power to the gas generating cells is turned back on again, to repeat the cycle.

The production cycle is repeated until tank **150** reaches a pressure of, typically, 80 psi, at which time the computer enables the output pressure regulator **160** which is typically set to operate at 40 psi, for the delivery of the hydroxyl gas to some external storage system or device. During this operation, the computer program handles all switching and displays the current status and any alerts or warning messages for the operator on the graphical display **95**.

Impedance-Matching Circuit 102:

The impedance-matching circuits **102** in **Fig.4**, convert the sinewave signals coming from the three-phase power source (**110** in **Fig.3**) into multi-polarity differential signals (**Fig.5**) which are applied to the triple wave-guide cluster arrays **132 A, 132B, 132C, 132D, 132E** and **132F** installed in cell **120**.

It is this converted signal, along with the phase relationship of the power source **110** and the triple wave-guide elements in cluster **132** submerged in water bath **133**, which produce the hydroxyl gases. It is important to note that not only is the gas produced between the elements in the array, but also between each array installed in the cell - see the phase relationship of array **A-B-C** shown in **Fig.3**. Also note that the array elements themselves are supplying many of the ions needed for the production of the gases.

Sequence of Hydroxyl Gas Generation:

Once the hydroxyl-generating cell **120** has been purged of ambient air and the production routing completed (**Fig.1**), the dual three-phase power source **110** is activated, supplying frequency, amplitude and phase signals to the impedance-matching circuitry **102**. The converted signals from **102** are then applied to cell array **132** for processing. It is the combination of the impedance-matching circuits signal transformations (as shown in **Fig.5** and **Fig.6**), the cell configuration and materials used in arrays **132**, and the rotational phase relationship between arrays **AD**, **BE** and **CF** and the submersion of these arrays in a bath of water **133**, that allows this system to produce large amounts of hydroxyl gases. The computer program 75 and it's graphic display **95**, is used by the operator to adjust the rate of gas production and set the upper limit to which the low-pressure cell **120** will charge.

After the cell **120** has reached its upper pressure cut-off limit (typically 5 psi), the power source **110** is turned off, enabling the compressor **140** to start its draw-down and transfer of the gases to the high-pressure tank **150**. When the pressure in the cell **120** reaches a low-level limit (near zero psi), **140** stops its charging cycle of **150**. Check valve **142** which is installed in **140**, prevents any back flow of gases to **120** from high-pressure tank **150**. The power source **110** is then turned back on to repeat the cycle. These charging cycles continue until the high-pressure tank **150** reaches it's upper pressure limit (typically 80 psi), at which point the hydroxyl production is stopped. As the gases in the high-pressure tank are being used or transferred to some external storage system, the pressure in **150** is monitored at the output of pressure-regulator **160**, until the low-pressure limit for this tank is reached (typically 40 psi). When this pressure level is reached, the hydroxyl gas production is started again.

During the operation of cell **120**, it's temperature is monitored to ensure that it does not exceed the "out of limits" conditions set by control **231** and monitored via the graphics display **95**. If the temperature exceed the limit set, then the gas production is stopped and the computer program alerts the operator, indicating the problem. The cooling system **30** which uses water jacket **50** surrounding cell **120**, helps to reduce the temperature and allows higher rates of gas production.

After extended running times, the water in cell **120** is replenished from bath **30** and filtered by **45**, to help control the operating impedance of the cell.

CLAIMS

1. The MLS-HFS information in this specification is the embodiment of the claims.

2. The system according to Claim 1 further enhances the production of hydroxyls based on the configuration of the hydroxyl gas-producing apparatuses of **Fig.3**.

3. The system according to Claim 1 further enhances the production of hydroxyls based on the configuration of the impedance-matching circuits of **Fig.4**.

4. The system according to Claim 1 further enhances the production of hydroxyls based on the application of the electrical signals shown in **Fig.5** applied to signal travelling wave-guides **132** submerged in a bath of water **133** installed in cell **120** and configured as depicted in **Fig.3**.

5. The system according to Claim 1 further enhances the production of hydroxyls based on the resonating action of the electrical signals depicted in **Fig.6**.

6. The system according to Claim 1 further enhances the production of hydroxyls based on the software program’s ability to control the production of hydroxyl gases; controlling it’s process limits, controlling it’s storage and controlling it’s delivery via operator controller **Fig.2**.

7. The software program **75** according to Claim 6, further enhances the safety of the production of hydroxyls based on the monitoring of high and low limits and either alerting the operator of the conditions and/or stopping the production on device failures via operator controller **Fig.2**.

8. The software according to Claim 6 further enhances the safety of the hydroxyls based on its ability to purge the system of ambient air before starting the production of hydroxyl gases.

Dr HENRY PUHARICH

Dr Andrija Puharich (who later changed his name to Henry Puharich) reportedly drove his motor home for hundreds of thousands of miles around North America in the 1970s using only water as fuel. At a mountain pass in Mexico, he collected snow for water. Here is an article which he wrote:

Cutting The Gordian Knot of the Great Energy Bind

by Andrija Puharich

Introduction

It is hardly necessary to weigh the value of the World Energy bank account for any sophisticated person, these days. It is grim. The oil reserves will dwindle away in a score of years or so, and the coal reserves will be gone in some twelve score years. This is not to say that the outlook is hopeless. There is an abundance of alternative energy sources, but the economics of development and exploitation present an enormous short-term strain on the world political and banking resources.

Visionary scientists tell us that the ideal fuel in the future will be as cheap as water, that it will be non-toxic both in its short-term, and in its long-term, effects, that it will be renewable in that it can be used over and over again, that it will be safe to handle, and present minimal storage and transportation problems and costs. And finally that it will be universally available anywhere on earth. What is this magical fuel, and why is it not being used? The fuel is water. It can be used in its fresh water form. It can be used in its salt water form. It can be used in its brackish form. It can be used in its snow and ice form. When such water is decomposed by electrolytic fission into hydrogen and oxygen gases, it becomes a high energy fuel with three times the energy output which is available from an equivalent weight of high grade gasoline.

Then why is water not being used as a fuel? The answer is simple - it costs too much with existing technology to convert water into hydrogen and oxygen gases. The basic cycle of using water for fuel is described in the following two equations, familiar to every high school student of Chemistry:

$$\mathbf{H_2O\ \ Electrolysis + 249.68\ BTU\ \Delta G \rightarrow H_2 + (1/2)O_2\ per\ mole\ of\ water..............(1)}$$

(1 mole = 18 gm). This means that it requires 249.688 BTU of energy (from electricity) to break water by electrolysis into the gases hydrogen and oxygen.

$$\mathbf{H_2 + (1/2)O_2 + catalyst \rightarrow H_2O - \Delta H\ 302.375\ BTU\ per\ mole\ of\ water..............(2)}$$

This means that 302.375 BTU of energy (heat or electricity) will be released when the gases, hydrogen and oxygen, combine. The end product (the exhaust) from this reaction is water. Note that more energy (under ideal conditions) is released from combining the gases than is used to free them from water. It is know that under ideal conditions it is possible to get some 20% more energy out of reaction (2) above, then it takes to produce the gases of reaction (1) above. Therefore, if reaction (1) could be carried out at 100% efficiency, the release of energy from reaction (2) in an optimally efficient engine (such as a low temperature fuel cell), there would be a net energy profit which would make the use of water as a fuel an economically feasible source of energy .

The cost of producing hydrogen is directly related to the cost of producing electricity. Hydrogen as produced today is generally a by-product of off-peak-hour electrical production in either nuclear or hydroelectric plants. The electricity thus produced is the cheapest way of making hydrogen. We can compare the cost of production of electricity and the cost of producing hydrogen. The following table is adapted from Penner whose data source is based on Federal Power Commission, and American Gas Association Figures of 1970 and on a 1973 price evaluation (just before the OPEC oil price escalation.)

Table 1: Relative Prices in Dollars per 106 BTU

Cost Component	Electricity	Electrolytically-Produced H
Production	2.67 (b)	2.95 to 3.23 (b)
Transmission	0.61	0.52 (c)
Distribution	1.61	0.34
Total Cost	$4.89	$3.81 to $4.09

If we compare only the unit cost of production of electricity vs Hydrogen from the above table:

106 BTU H_2 / 106 BTU El = $3.23 / $2.67, or 20.9% higher cost, H_2

It must also be noted that the price of natural gas is much cheaper than either electricity or hydrogen, but because of the price fluctuations due to recent deregulation of gas it is not possible to present a realistic figure. In the opinion of Penner, if the hydrogen production cost component of its total cost could be reduced three fold, it would become a viable alternate energy source. In order to achieve such a three-fold reduction in production costs, several major breakthroughs would have to occur.

1. **Endergonic Reaction** A technological breakthrough which permits 100% conversion efficiency of water by electrolysis fission into the two gases, Hydrogen as fuel and Oxygen as oxidant.

2. **Hydrogen Production in Situ** A technological breakthrough which eliminates the need and cost of hydrogen liquefaction and storage, transmission, and distribution, by producing the fuel in situ, when and where needed.

3. **Exergonic Reaction** A technological breakthrough which yields a 100% efficient energy release from the combination of hydrogen and oxygen into water in an engine that can utilize the heat, steam, or electricity thus produced.

4. **Engine Efficiency** By a combination of the breakthroughs outlined above, 1, 2, and 3 utilized in a highly efficient engine to do work, it is theoretically possible to achieve a 15% to 20% surplus of energy return over energy input.

It is of interest to record that a new invention is now being developed to realise the above outlined goal of cheap, clean renewable and high grade energy. A Thermodynamic Device has been invented which produces hydrogen as fuel, and oxygen as oxidant, from ordinary water or from sea water, eliminating the cost and hazard of liquefaction, storage, transmission, and distribution. The saving of this aspect of the invention alone reduces the total cost of hydrogen by about 25%.

This Thermodynamic Device is based on a new discovery - the efficient electrolytic fission of water into hydrogen gas and oxygen gas by the use of low frequency alternating currents as opposed to the conventional use of direct current, or ultra-high frequency current today. Such gas production from water by electrolytic fission approaches 100% efficiency under laboratory conditions and measurements. No laws of physics are violated in this process.

This Thermodynamic Device has already been tested at ambient pressures and temperatures from sea level to an altitude of 10,000 feet above sea level without any loss of its peak efficiency. The device produces two types of gas bubbles; one type of bubble contains hydrogen gas; the other type contains oxygen gas. The two gases are thereafter easily separable by passive membrane filters to yield pure hydrogen gas, and pure oxygen gas.

The separate gases are now ready to be combined in a chemical fusion with a small activation energy such as that from a catalyst or an electrical spark, and yield energy in the form of heat, or steam, or electricity as needed. When the energy is released by the chemical fusion of hydrogen and oxygen, the exhaust product is clean water. The water exhaust can be released into nature and then renewed in its energy content by natural processes of evaporation, solar irradiation in cloud form, an subsequent precipitation as rain on land or sea, and then collected again as a fuel source. Or, the exhaust water can have its energy content pumped up by artificial processes such as through solar energy acting through photocells. Hence, the exhaust product is both clean and renewable. The fuel hydrogen, and the oxidant oxygen, can be used in any form of heat engine as an energy source if economy is not an important factor. But the practical considerations of maximum efficiency, dictate that a low temperature fuel cell with its direct chemical fusion conversion from gases to electricity offers the greatest economy and efficiency from small power plants of less than 5 kilowatts.

For large power plants, steam and gas turbines are the ideal heat engines for economy and efficiency. With the proper engineering effort, automobiles could be converted rather easily to use water as the main fuel source.

The Thermodynamic Device (“TD”) is made up of three principal components:
Component 1: An electrical function generator which energizes a water cell.
Component 2: The Thermodynamic Device
Component 3: A weak electrolyte.

Component 1: The Electrical Function Generator:

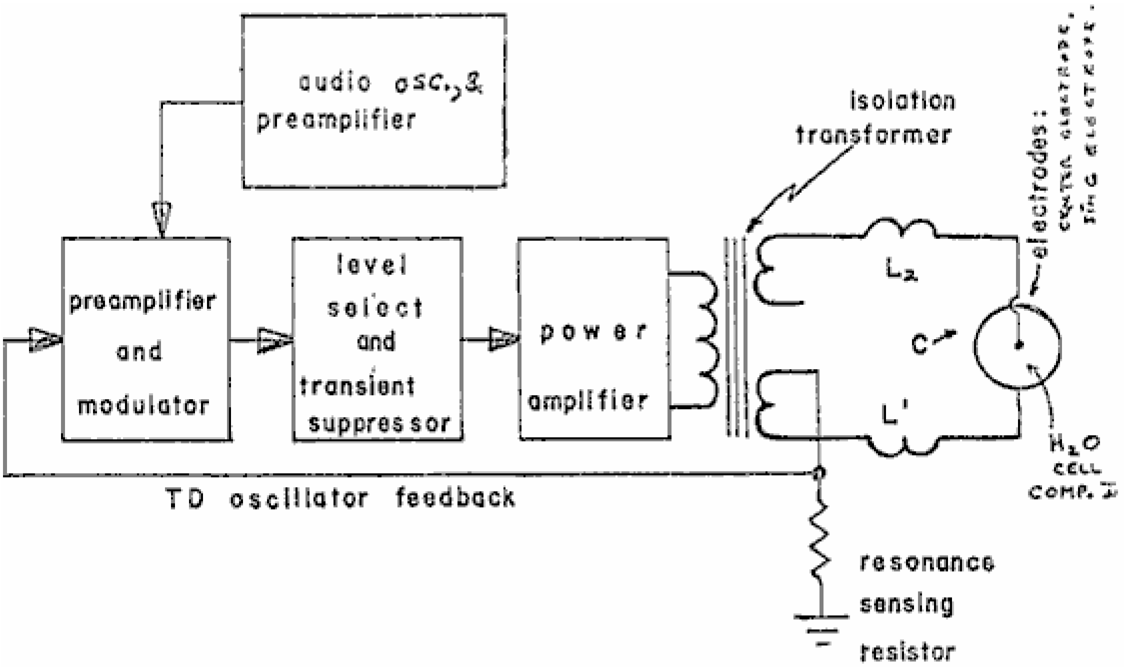

Figure 1: Signal Generator Component Block

This electronic device has a complex alternating current output consisting of an audio frequency (range 20 to 200 Hz) amplitude modulation of a carrier wave (range: 200 to 100,000 Hz). The output is connected by two wires to Component II at the center electrode, and at the ring electrode. See Fig.1. The impedance of this output signal is continuously being matched to the load which is the water solution in Component II.

Component 2: The Thermodynamic Device:

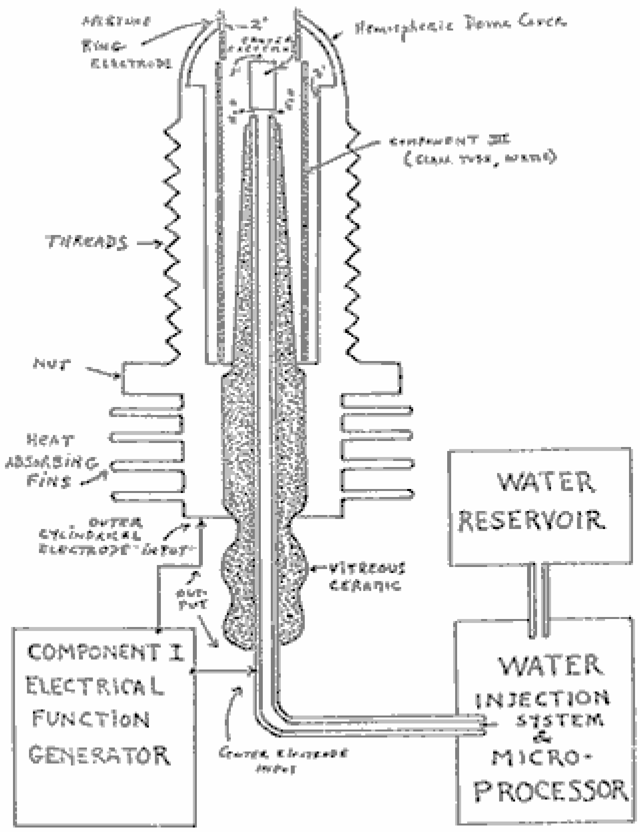

Figure 2: Thermodynamic Device

The TD is fabricated of metals and ceramic in the geometric form of a coaxial cylinder made up of a centered hollow tubular electrode which is surrounded by a larger tubular steel cylinder. These two electrodes comprise the coaxial electrode system energised by Component I. The space between the two electrodes is, properly speaking, Component III which contains the water solution to be electrolysed. The center hollow tubular electrode carries water into the cell, and is further separated from the outer cylindrical electrode by a porous ceramic vitreous material. The space between the two electrodes contains two lengths of tubular Pyrex glass, shown in Figures 2 and 3. The metal electrode surface in contact with the water solution are coated with a nickel alloy.

Component 3: The weak electrolyte water solution:

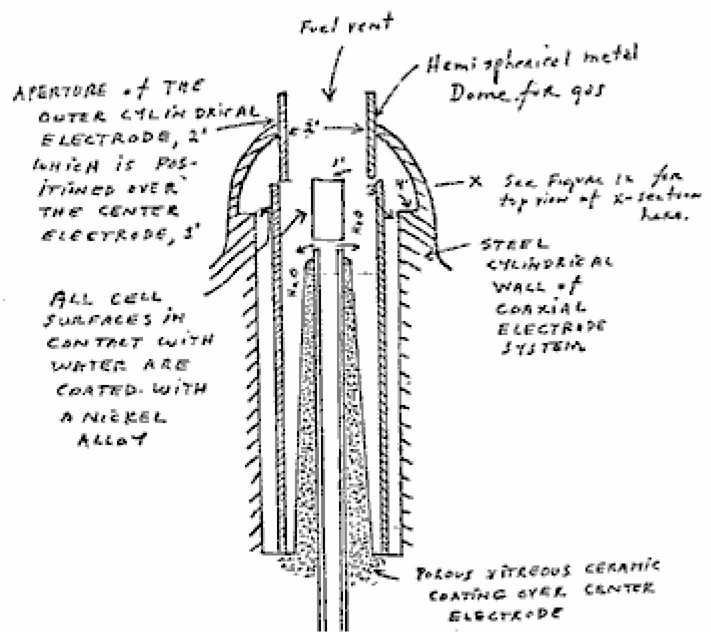

Figure 3: The Water Cell Section of Component 2

This consists of the water solution, the two glass tubes, and the geometry of the containing wall of Component 2. It is the true load for Component 1, and its electrode of Component 2.

The Component 3 water solution is more properly speaking, ideally a 0.1540 M Sodium Chloride solution, and as such, it is a weak electrolyte. In Figure 4 we show the hypothetical tetrahedral structure of water molecule, probably in the form in which the complex electromagnetic waves of Component 1 to see it. The center of mass of this tetrahedral form is the oxygen atom. The geometric arrangement of the p electrons of oxygen probably determine the vectors i (L1) and i (L2) and i (H1) and i (H2) which in turn probably determine the tetrahedral architecture of the water molecule. The p electron configuration of oxygen is shown in Figure 5. Reference to Figure 4, shows that the diagonal of the right side of the cube has at its corner terminations, the positive charge hydrogen (H+) atoms; and that the left side of the cube diagonal has at its corners, the lone pair electrons, (e-). It is to be further noted that this diagonal pair has an orthonormal relationship.

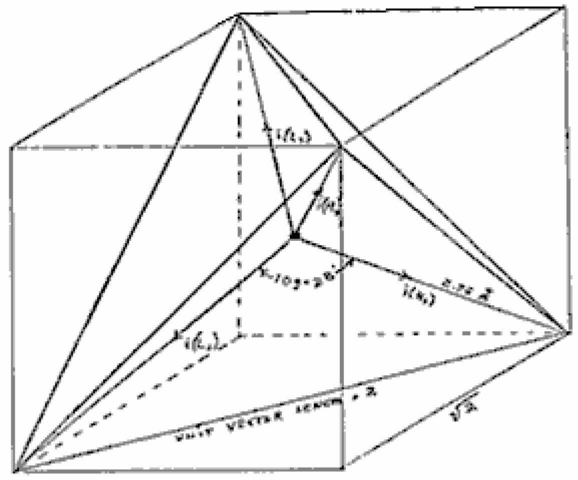

Figure 4: The Water Molecule in Tetrahedral Form:

Hydrogen bonding occurs only along the four vectors pointing to the four vertices of a regular tetrahedron, and in the above drawing we show the four unit vectors along these directions originating from the oxygen atoms at the center. i(H1) and i(H2) are the vectors of the hydrogen bonds formed by the molecule i as a donor molecule. These are assigned to the lone pair electrons. Molecules i are the neighboring oxygen atoms at each vertex of the tetrahedron.

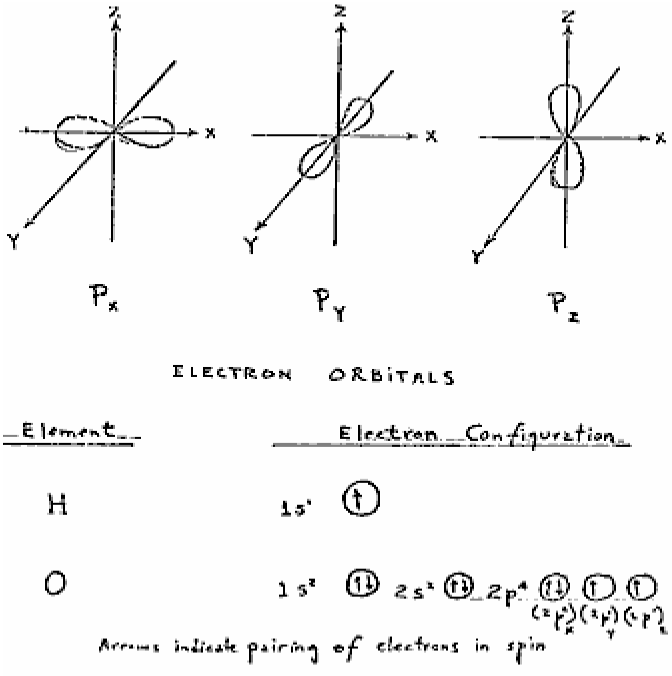

Figure 5: Electron Orbitals

3. Electrothermodynamics

We will now portray the complex electromagnetic wave as the tetrahedral water molecule sees it. The first effect felt by the water molecule is in the protons of the vectors, i (H1) and i (H2). These protons feel the 3-second cycling of the amplitude of the carrier frequency and its associated side bands as generated by Component 1. This sets up a rotation moment of the proton magnetic moment which one can clearly see on the XY plot of an oscilloscope, as an hysteresis loop figure. However, it is noted that this hysteresis loop does not appear in the liquid water sample until all the parameters of the three components have been adjusted to the configuration which is the novel basis of this device. The hysteresis loop gives us a vivid portrayal of the nuclear magnetic relaxation cycle of the proton in water.

The next effect felt by the water molecule is the Component 1 carrier resonant frequency, Fo. At the peak efficiency for electrolysis the value of Fo is 600 Hz +/- 5 Hz.

This resonance however is achieved through control of two other factors. The first is the molal concentration of salt in the water. This is controlled by measuring the conductivity of the water through the built-in current meter of Component 1. There is maintained an idea ratio of current to voltage where I/E = 0.01870 which is an index to the optimum salt concentration of 0.1540 Molal.

The second factor which helps to hold the resonant which helps to hold the resonant frequency at 600 Hz is the gap distance of Y, between the centre electrode, and the ring electrode of Component 2.

This gap distance will vary depending on the size scale of Component 2, but again, the current flow I, is used to set it to the optimal distance when the voltage reads between 2.30 (rms) volts, at resonance Fo, and at molal concentration, 0.1540. The molal concentration of the water is thus seen to represent the electric term of the water molecule and hence its conductivity.

The amplitude modulation of the carrier gives rise to side bands in the power spectrum of the carrier frequency distribution. It is these side bands which give rise to an acoustic vibration of the liquid water, and it is believed, also to the tetrahedral water molecule. The importance of the phonon effect - the acoustic vibration of water in electrolysis - was discovered in a roundabout way. Research work with Component 1 had earlier established that it could be used for the electro-stimulation of hearing in humans. When the output of Component 1 is comprised of flat circular metal plates applied to the head of normal hearing humans, it was found that they could hear pure tones and speech. Simultaneously, acoustic vibration could also be heard by an outside observer with a stethoscope placed near one of the electrodes on the skin. It was observed that the absolute threshold of hearing could be obtained at 0.16 mW (rms), and by calculation that there was an amplitude of displacement of the eardrum of the order of 10^{-11} meter and a corresponding amplitude of the cochlear basilar membrane of 10^{-13}

meter. Corollary to this finding, I was able to achieve the absolute reversible threshold of electrolysis at a power level of 0.16 mW (rms). By carrying out new calculations, I was able to show that the water was being vibrated with a displacement of the order of 1 Angstrom unit (= 10^{-10} meters). This displacement is of the order of the diameter of the hydrogen atom. Thus it is possible that the acoustic phonons generated by audio side bands of the carrier are able to vibrate particle structures within the unit water tetrahedron.

We now turn to the measurement problem with respect to efficiency of electrolysis. There are four means which can be used to measure the reactant product of water electrolysis. For simple volume measurements, one can use a precision nitrometer such as the Pregl type. For both volume and quantitative analysis one can use the gas chromatography with thermal conductivity detector. For a continuous flow analysis of both volume and gas species the mass spectrometer is very useful. For pure thermodynamic measurements the calorimeter is useful. In our measurements, all four methods were examined, and it was found that the mass spectrometer gave the most flexibility and the greatest precision. In the next section we will describe our measurement using the mass spectrometer.

Protocol

4. Methodology for the Evaluation of the Efficiency of Water Decomposition by Means of Alternating Current Electrolysis

Introduction

All systems used today for the electrolysis of water into hydrogen as fuel, and oxygen as oxidant apply direct current to a strong electrolyte solution. These systems range in efficiency from 50% to 71%. The calculation of energy efficiency in electrolysis is defined as follows:

"The energy efficiency is the ratio of the energy released from the electrolysis products formed (when they are subsequently used) to the energy required to effect electrolysis."

The energy released by the exergonic process under standard conditions is

$H_2(g) + (1/2)\ O_2(g) \rightarrow H_2O = 3\ 02.375$ BTU

which is 68.315 Kcal/mol. or, 286,021 Joules/mol, and is numerically equal to the enthalphy charge (ΔH) for the indicated process. On the other hand, the minimum energy (or useful work input) required at constant temperature and pressure for electrolysis equals the Gibbs free energy change (ΔG).

Penner shows that there is a basic relation derivable from the first and second laws of thermodynamics for isothermal changes which shows that

$\Delta G = \Delta H - T\ \Delta S$ .... (2)

where ΔS represents the entropy change for the chemical reaction and T is the absolute temperature.

The Gibbs free energy change (ΔG) is also related to the voltage (e) required to implement electrolysis by Faraday's equation:

$e = (\Delta G / 23.06\ n)$ volts .... (3)

where ΔG is in Kcal/mol, and n is the number of electrons (or equivalents) per mole of water electrolysed and has the numerical value 2 in the equation (endergonic process),

$H_2O \rightarrow H_2\ (g) + (1/2)O_2\ (g) + 56.620$ kcal or + 249.68 BTU .... (4)

Therefore, according to equation (2) at atmospheric pressure, and $300^{O}K$:
$\Delta H = 68.315$ kcal/mol of H_2O, and
$\Delta G = 56.620$ kcal / mol of H_2O = 236,954 J/mol H_2O for the electrolysis of liquid water.

In view of these thermodynamic parameters for the electrolysis of water into gases, hydrogen and oxygen, we can establish by Eq.(2) numeric values where,

$\Delta G = 236.954$ J/mol H_2O under standard conditions. Thus

$n = \Delta G \text{ (J/mol)} / \Delta Ge \text{ (J/mol)} = <1$ .... (5)

where ΔGe is the electrical energy input to H_2O (1) in Joules, and ΔG is the Gibbs free energy of H_2O. The conversion between the two quantities is one Watt second (Ws) = one Joule.

Or, in terms of gas volume, as hydrogen, produced and measured,

$n =$ Measured H_2 (cc) / Ideal H_2 (cc) = <1 .... (6)

In accordance with these general principles we present the methodology followed in evaluating the electrolytic of alternating current on H_2O in producing the gases, hydrogen and oxygen. No attempt has been made to utilize these gases according to the process of Eq.(1). It is to be noted that the process

$H_2 \text{ (g)} + (1/2)O_2 \text{ (g)} \rightarrow H_2O \text{ (g)}$ .... (7)

yields only 57.796 kcal /mol. Eq.(7) shows that per mole of gases water formed at 300^{O}K, the heat released is reduced from the 68.315 kcal/mol at Eq. (1) by the molar heat of evaporation of water at 300^{O}K (10.5 kcal) and the overall heat release is 57.796 kcal/mol if H_2O (g) is formed at 300^{O}K.

In the following sections we describe the new method of electrolysis by means of alternating current, and the exact method and means used to measure the endergonic process of Eq.(4) and the governing Eq.(2) and Eq.(5).

5. Thermodynamic Measurement

In order to properly couple Component 2 to a mass spectrometer, one requires a special housing around Component 2 which will capture the gases produced, and permit these to be drawn under low vacuum into the mass spectrometer. Therefore a stainless steel and glass chamber was built to contain Component 2, and provision made to couple it directly through a CO_2 water-trap to the mass spectrometer with the appropriate stainless steel tubing. This chamber is designated as Component 4. Both the mass spectrometer and Component 4 were purged with helium and evacuated for a two hour period before any gas samples were drawn. In this way, contamination was minimized. The definitive measurement were done at Gollob Analytical Services in Berkeley Heights, New Jersey.

We now describe the use of Component 1 and how its energy output to Component 2 is measured. The energy output of Component 1 is an amplitude-modulated alternating current looking into a highly non-linear load, i.e., the water solution. Component 1 is so designed that at peak load it is in resonance across the system (Components 1, 2, and 3) and the vector diagrams show that the capacitive reactance, and the inductance reactance are almost exactly 180^{O} out of phase with each other, and so the net power output is reactive (the dissipative power is very small). This design ensures minimum power losses across the entire output system. In the experiments to be described, the entire emphasis is placed on achieving the maximum gas yield (credit) in exchange for the minimum applied electrical energy.

The most precise way to measure the applied energy from Component 1 to Component 2 and Component 3, is to measure the power, P, in watts, W. Ideally this should be done with a precision wattmeter, but since we were interested in following the voltage and current separately, it was decided not to use the watt meter. Separate meters were used to continuously monitor the current and the volts.

This is done by precision measurement of the volts across Component 3 as root mean square (rms) volts; and the current flowing in the system as rms amperes. Precisely calibrated instruments were used to take these two measurements. A typical set of experiments using water in the form of 0.9% saline solution 0.1540 molar to obtain high efficiency hydrolysis gave the following results:

rms Current = I = 25mA to 38 mA (0.025 A to 0.038 A.)

rms Volts = E = 4.0 Volts to 2.6 Volts

The resultant ration between current and voltage is dependent on many factors such as the gap distance between the center and ring electrodes, dielectric properties of the water, conductivity properties of the water, equilibrium states, isothermal conditions, materials used, and even the pressure of clathrates. The above current and voltage values reflect the net effect of various combinations of such parameters. When one takes the product of rms current, and rms volts, one has a measure of the power, P in watts.

P = I x E = 25 mA x 4.0 volts =100 mW (0.1 W) and P = I x E =38 mA x 2.6 volts = 98.8 mW (0.0988 W)

At these power levels (with load), the resonant frequency of the system is 600 Hz (plus or minus 5 Hz) as measured on a precision frequency counter. The waveform was monitored for harmonic content on an oscilloscope, and the nuclear magnetic relaxation cycle was monitored on an XY plotting oscilloscope in order to maintain the proper hysteresis loop figure. All experiments were run so that the power in watts, applied through Components 1, 2, and 3 ranged between 98.8 mW to 100 mW.

Since by the International System of Units 1971 (ST), one Watt-second (Ws) is exactly equal to one Joule (J), our measurements of efficiency used these two yardsticks (1 Ws = 1J) from the debit side of the measurement.

The energy output of the system is, of course, the two gases, Hydrogen (H_2) and Oxygen, $(1/2)O_2$, and this credit side was measured in two laboratories, on two kinds of calibrated instruments, namely gas chromatography machine, and mass spectrometer machine.

The volume of gases H_2 and $(1/2)O_2$ was measured as produced under standard conditions of temperature and pressure in unit time, i.e., in cubic centimeters per minute (cc/min), as well as the possibility contaminating gases, such as air oxygen, nitrogen and argon, carbon monoxide, carbon dioxide, water vapor, etc.

The electrical and gas measurements were reduced to the common denominator of Joules of energy so that the efficiency accounting could all be handled in one currency. We now present the averaged results from many experiments. The standard error between different samples, machines, and locations is at +/- 10%, and we only use the mean for all the following calculations.

2. Thermodynamic Efficiency for the Endergonic Decomposition of Liquid Water (Salininized) to Gases Under Standard Atmosphere (754 to 750 mm. Hg) and Standard Isothermal Conditions @ $25^{O}C = 77^{O}F = 298.16^{O}K$, According to the Following Reaction:

$H_20 (1) \rightarrow H_2(g) + (1/2)O_2(1) + \Delta G = 56.620$ Kcal /mole .... (10)

As already described, ΔG is the Gibbs function. We convert Kcal to our common currency of Joules by the formula, One Calorie = 4.1868 Joules

$\Delta G = 56.620$ Kcal x 4.1868 J = 236,954/J/mol of H_2O where 1 mole = 18 gr. .... (11)

ΔGe = the electrical energy required to yield an equivalent amount of energy from H_2O in the form of gases H_2 and $(1/2)O_2$.

To simplify our calculation we wish to find out how much energy is required to produce the 1.0 cc of H_2O as the gases H_2 and $(1/2)O_2$. There are (under standard conditions) 22,400 cc = V of gas in one mole of H_2O. Therefore

$\Delta G / V$ = 236,954 J / 22,400 cc = 10.5783 J/cc. .... (12)

We now calculate how much electrical energy is required to liberate 1.0 cc of the H_2O gases (where $H_2 = 0.666$ parts, and $(1/2)O_2 = 0.333$ parts by volume) from liquid water. Since P = 1 Ws = 1 Joule , and V = 1.0 cc of gas = 10.5783 Joules, then

PV = 1 Js x 10.5783 J = 10.5783 Js, or, = 10.5783 Ws .... (13)

Since our experiments were run at 100 mW (0.1 W) applied to the water sample in Component II, III, for 30 minutes, we wish to calculate the ideal (100% efficient) gas production at this total applied power level. This is,

0.1 Ws x 60 sec x 30 min = 180,00 Joules (for 30 min.). The total gas production at ideal 100% efficiency is 180 J/10.5783 J/cc = 17.01 cc H_2O (g)

We further wish to calculate how much hydrogen is present in the 17.01 cc H_2O (g).

17.01 cc H_2O (g) x 0.666 H_2 (g) = 11.329 cc H_2 (g) .... (14)

17.01 cc H_2O (g) x 0.333 $(1/2)O_2$ (g) = 5.681 cc $(1/2)O_2$ (g)

Against this ideal standard of efficiency of expected gas production, we must measure the actual amount of gas produced under: (1) Standard conditions as defined above, and (2) 0.1 Ws power applied over 30 minutes. In our experiments, the mean amount of H_2 and (1/2)O_2 produced, as measured on precision calibrated GC, and MS machines in two different laboratories, where SE is +/- 10%, is,

Measured Mean = 10.80 cc H_2 (g)
Measured Mean = 5.40 cc (1/2) cc (1/2)O_2 (g)
Total Mean = 16.20 cc H_2O (g)

The ratio, n, between the ideal yield, and measured yield,

Measured H_2 (g) / Ideal H_2 (g) = 10.80 cc / 11.33 cc = 91.30%

6. Alternative Method for Calculating Efficiency Based on the Faraday Law of Electrochemistry

This method is based on the number of electrons that must be removed, or added to decompose, or form one mole of, a substance of valence one. In water (H_2O), one mole has the following weight:

H = 1.008 gr /mol
H = 1.008 gr /mol
O = 15.999 gr/mol
Thus, 1 mol H_2O = 18.015 gr/mol

For a univalent substance, one gram/mole contains 6.022 x 10-23 electrons = N = Avogadro's Number. If the substance is divalent, trivalent, etc., N is multiplied by the number of the valence. Water is generally considered to be of valence two.

At standard temperature and pressure ("STP") one mole of a substance contains 22.414 cc, where Standard temperature is 273.15^{O}K = 0^{O}C = T . Standard Pressure (one atmosphere) = 760 mm Hg = P.

One Faraday ("F") is 96,485 Coulombs per mole (univalent).

One Coulomb ("C") is defined as:

1 N / 1 F = 6.122 x 10^{23} Electrons / 96,485 C = one C

The flow of one C/second = one Ampere.
One C x one volt = one Joule second (Js).
One Ampere per second @ one volt = one Watt = one Joule.

In alternating current, when amps (I) and Volts (E) are expressed in root mean squares (rms), their product is Power in watts.

P = IE watts (Watts = Amps x Volts).

With these basic definitions we can now calculate efficiency of electrolysis of water by the method of Faraday's electrochemistry.

The two-electron model of water requires 2 moles of electrons for electrolysis (2 x 6.022 x 10^{23}), or two Faraday quantities (2 x 96,485 = 192,970 Coulombs).

The amount of gas produced will be:

H_2 = 22,414 cc /mol at STP
(1/2)O_2 = 11,207 cc / mol at STP
Gases = 33.621 cc / mol H_2O (g)

The number of coulombs required to produce one cc of gases by electrolysis of water:

193,970 C / 33621 C = 5.739567 C per cc gases.

Then, 5,739 C /cc /sec = 5.739 amp/sec/cc. How many cc of total gases will be produced by 1 A/sec?

0.1742291709 cc.

How many cc of total gases will be produced by 1 A/min ?

10.45375 cc/min

What does this represent as the gases H_2 and O_2 ?

(1/2)O_2 = 3.136438721 cc/Amp/min.
H_2 = 6.2728 cc/Amp /min.

We can now develop a Table for values of current used in some of our experiments, and disregarding the voltage as is done conventionally.

1. Calculations for 100 mA per minute:
Total Gases = 1.04537 cc/min
H_2 = 0.6968 cc/min
(1/2)O_2 = 0.3484 cc/min
30 min. H_2 = 20.9054 cc/ 30 minutes

2. Calculations for 38 mA per minute:
Total Gases = 0.3972 cc/ 30 minutes
H_2 = 0.2645 cc/min
(1/2)O_2 = 0.1323 cc/min
30 min. H_2 = 7.9369 cc/min

3. Calculations for 25mA per minute:
30 min. H_2 = 5.2263 cc/ minute

7. Conclusion

Fig.6 and Fig.7 [not available] show two of the many energy production systems that may be configured to include renewable sources and the present electrolysis technique. Figure 6 shows a proposed photovoltaic powered system using a fuel cell as the primary battery. Assuming optimum operating conditions using 0.25 watt seconds of energy from the photovoltaic array would enable 0.15 watt-seconds to be load.

Figure 7 depicts several renewable sources operating in conjunction with the electrolysis device to provide motive power for an automobile.

****

US Patent 4,394,230 DATE 19th July 1983 INVENTOR: HENRY K. PUHARICH

METHOD AND APPARATUS FOR SPLITTING WATER MOLECULES

This is a re-worded extract from the United States Patent number 4,394,230. It describes how Henry Puharich was able to split water into hydrogen and oxygen gasses by a process which used very little input power.

ABSTRACT

Disclosed herein is a new and improved thermodynamic device to produce hydrogen gas and oxygen gas from ordinary water molecules or from seawater at normal temperatures and pressure. Also disclosed is a new and improved method for electrically treating water molecules to decompose them into hydrogen gas and oxygen gas at efficiency levels ranging between approximately 80-100%. The evolved hydrogen gas may be used as a fuel; and the evolved oxygen gas may be used as an oxidant.
Inventors: Puharich; Henry K. (Rte. 1, Box 97, Delaplane, VA 22025)

BACKGROUND OF THE INVENTION

The scientific community has long realised that water is an enormous natural energy resource, indeed an inexhaustible source, since there are over 300 million cubic miles of water on the earth's surface, all of it a potential source of hydrogen for use as fuel. In fact, more than 100 years ago Jules Verne prophesied that water eventually would be employed as a fuel and that the hydrogen and oxygen which constitute it would furnish an inexhaustible source of heat and light.

Water has been split into its constituent elements of hydrogen and oxygen by electrolytic methods, which have been extremely inefficient, by thermochemical extraction processes called thermochemical water-splitting, which have likewise been inefficient and have also been inordinately expensive, and by other processes including some employing solar energy. In addition, artificial chloroplasts imitating the natural process of photosynthesis have been used to separate hydrogen from water utilising complicated membranes and sophisticated artificial catalysts. However, these artificial chloroplasts have yet to produce hydrogen at an efficient and economical rate.

These and other proposed water splitting techniques are all part of a massive effort by the scientific community to find a plentiful, clean, and inexpensive source of fuel. While none of the methods have yet proved to be commercially feasible, they all share in common the known acceptability of hydrogen gas as a clean fuel, one that can be transmitted easily and economically over long distances and one which when burned forms water.

SUMMARY OF THE PRESENT INVENTION

In classical quantum physical chemistry, the water molecule has two basic bond angles, one angle being 104°, and the other angle being 109°28'. The present invention involves a method by which a water molecule can be energised by electrical means so as to shift the bond angle from the 104° degree. configuration to the 109° degree 28' tetrahedral geometrical configuration.

An electrical function generator (Component 1) is used to produce complex electrical wave form frequencies which are applied to, and match the complex resonant frequencies of the tetrahedral geometrical form of water. It is this complex electrical wave form applied to water which is contained in a special thermodynamic device (Component II) which shatters the water molecule by resonance into its component molecules --- hydrogen and oxygen.

The hydrogen, in gas form, may then be used as fuel; and oxygen, in gas form is used as oxidant. For example, the thermodynamic device of the present invention may be used as a hydrogen fuel source for any existing heat engine --- such as, internal combustion engines of all types, turbines, fuel cell, space heaters, water heaters, heat exchange systems, and other such devices. It can also be used for the desalination of sea water, and other water purification purposes. It can also be applied to the development of new closed cycle heat engines where water goes in as fuel, and water comes out as a clean exhaust.

For a more complete understanding of the present invention and for a greater appreciation of its attendant advantages, reference should be made to the following detailed description taken in conjunction with the accompanying drawings.

DESCRIPTION OF THE DRAWINGS:

Fig.1 is a schematic block diagram illustrating the electrical function generator, Component I, employed in the practice of the present invention:

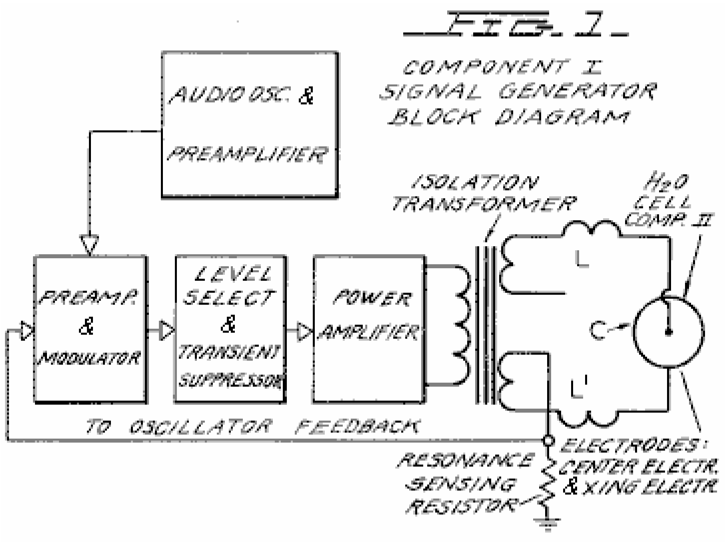

Fig.2 is a schematic illustration of the apparatus of the present invention, including a cross sectional representation of the thermodynamic device, Component II:

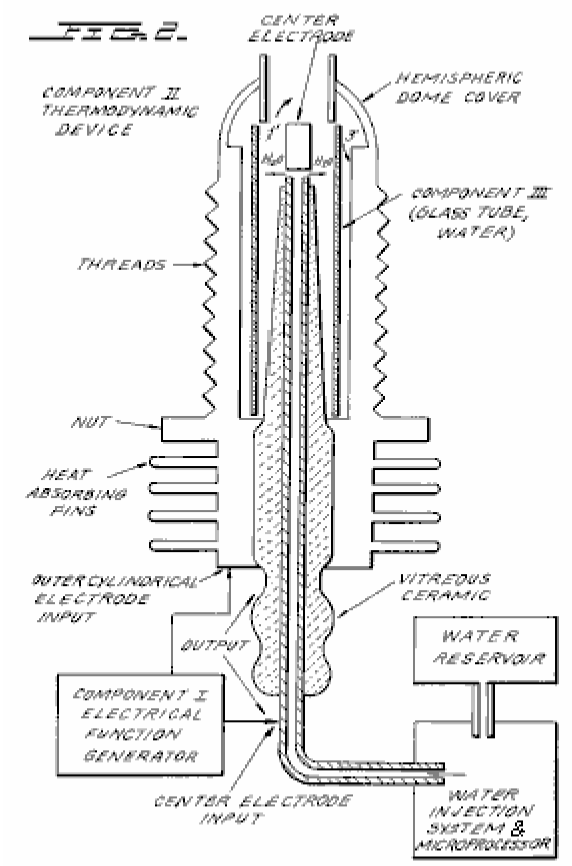

Fig.3 is a cross-sectional view of Component III of the present invention, the water cell section of Component II:

FIG. 3.

COMPONENT III.
THE WATER CELL SECTION
OF COMPONENT II

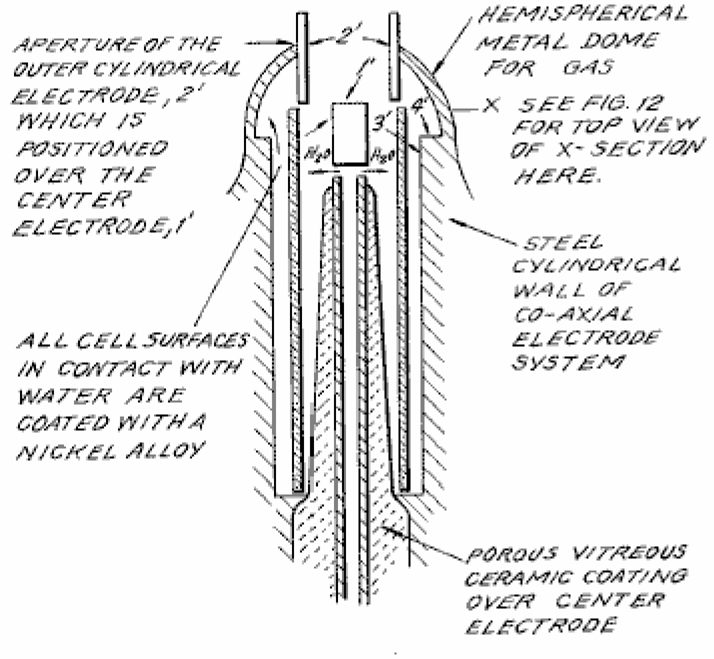

Fig.4 is an illustration of the hydrogen covalent bond:

FIG. 4.

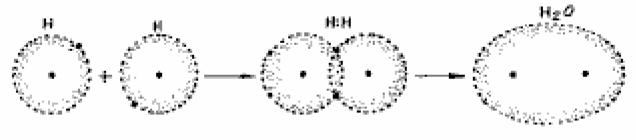

Fig.4A is an illustration of the hydrogen bond angle:

FIG. 4A.

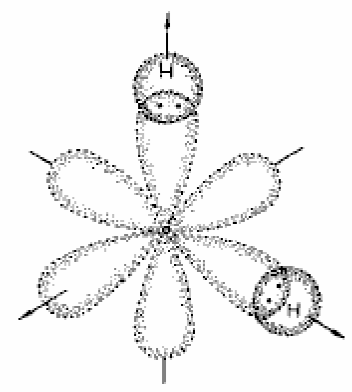

UNHYBRIDIZED ORBITAL INTERACTION
IN WATER BOND ANGLE IS
104° RATHER THAN 90° AS PREDICTED

Fig.4B is an illustration of hybridised and un-hybridised orbitals:

FIG. 4B

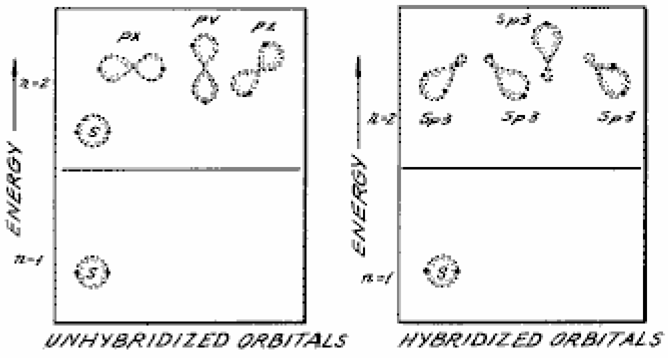

FORMATION OF sp3 HYBRID ORBITALS

Fig.4C is an illustration of the geometry of methane ammonia and water molecules:

FIG. 4C

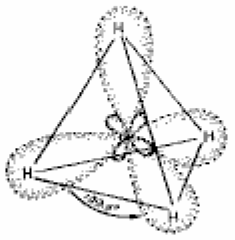

HYBRIDIZED METHANE MOLECULE CH_4

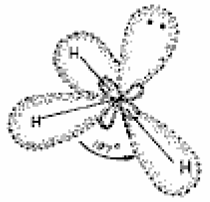

HYBRIDIZED AMMONIA MOLECULE NH_3

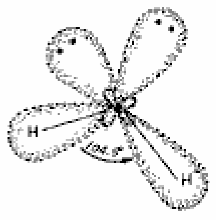

HYBRIDIZED WATER MOLECULE H_2O

GEOMETRY OF METHANE,
AMMONIA, AND WATER MOLECULES

Fig.5 is an illustration of an amplitude modulated carrier wave:

FIG. 5.

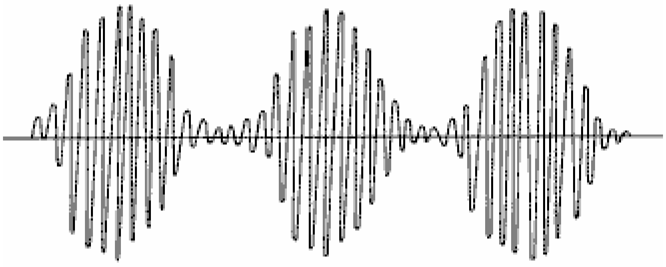

AMPLITUDE MODULATED 90° CARRIER SINE WAVE

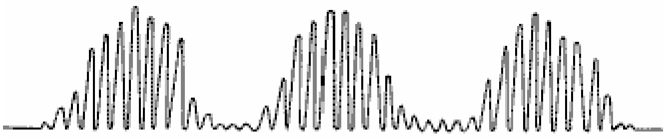

HALF-WAVE VECTIFICATION OF ABOVE SIGNAL

Fig.6 is an illustration of a ripple square wave:

FIG. 6.

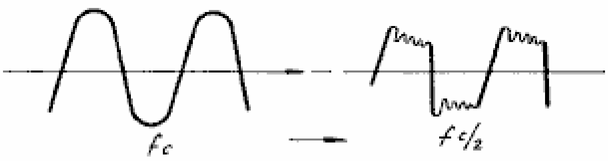

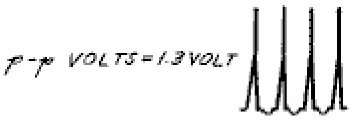

FIG. 6A.

Fig.6A is an illustration of unipolar pulses.

Fig.7 is a diagram showing ion distribution at the negative electrode:

FIG. 7

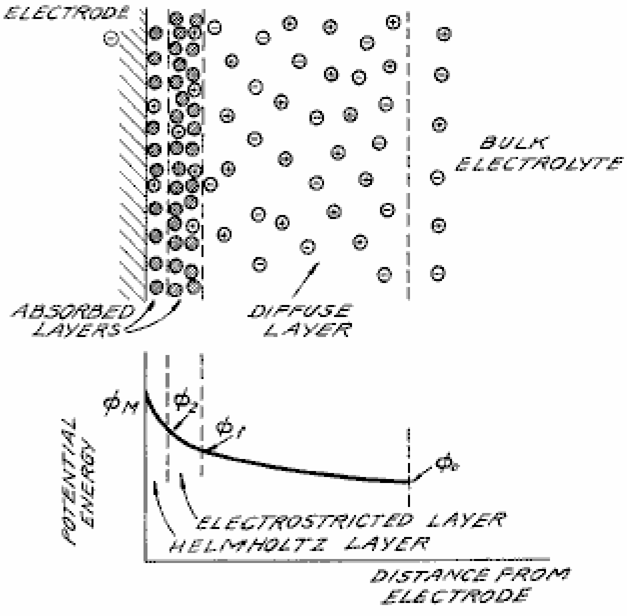

DIAGRAM OF THE DOUBLE LAYER CLOSE TO A NEGATIVE ELECTRODE. THE POTENTIAL ENERGY OF POSITIVE IONS IN THIS REGION WHEN NO CURRENT IS FLOWING IS SHOWN IN THE LOWER DIAGRAM. $\phi_M - \phi_2$ IS THE ELECTRON TRANSFER POTENTIAL: $\phi_2 - \phi_1$ IS RELATED TO THE ACTIVATION OVERPOTENTIAL: AND $\phi_1 - \phi_0$ IS RELATED TO THE DIFFUSION OVERPOTENTIAL.

KEY
◍ SOLVENT MOLECULE = H_2O
⊕ POSITIVE ION = H^+
⊖ NEGATIVE ION = O^-

Fig.8 is an illustration of tetrahedral bonding orbitals:

FIG.8.

EQUIVALENT TETRAHEDRAL
BONDING ORBITALS OF WATER

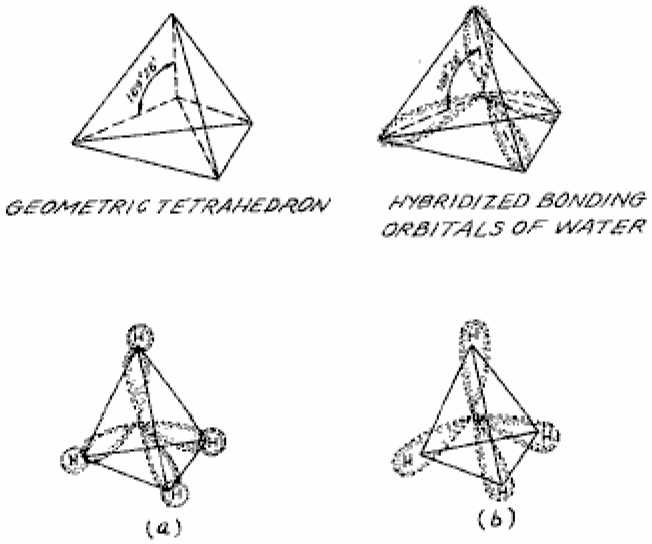

METHANE OVERLAP OF SPHERICAL
1s ORBITAL OF HYDROGEN WITH
sp3 BONDING ORBITALS OF CARBON
(a) RESULTS IN EQUIVALENT SIGMA
BONDS, THE MOLECULAR ORBITALS
OF (b).

Fig.9 is an illustration of water molecules:

FIG.9.

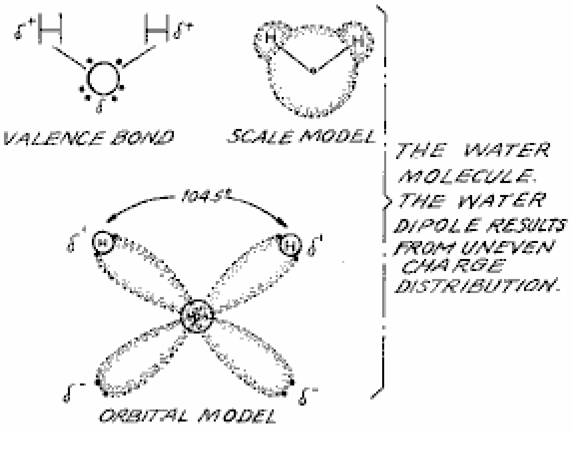

Fig.10 is an illustration of productive and non-productive collisions of hydrogen with iodine:

FIG.10

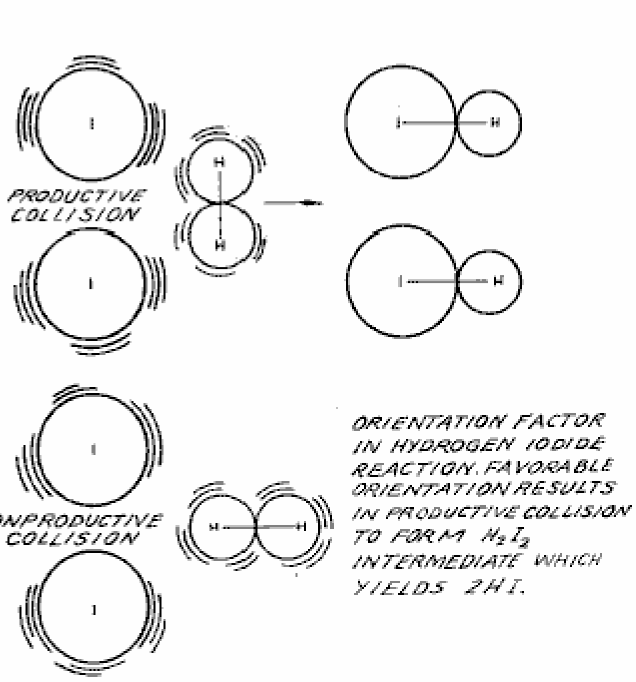

Fig.11 is a wave form found to be the prime characteristic for optimum efficiency:

FIG.11

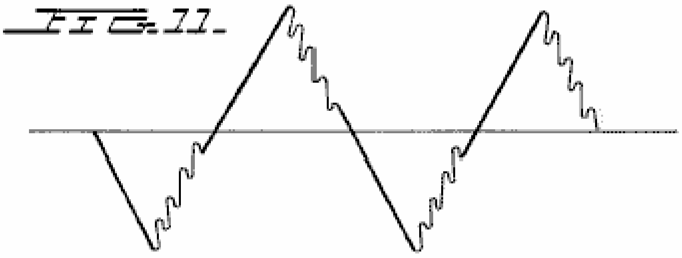

Fig.12 is an illustration of pearl chain formation:

FIG.12

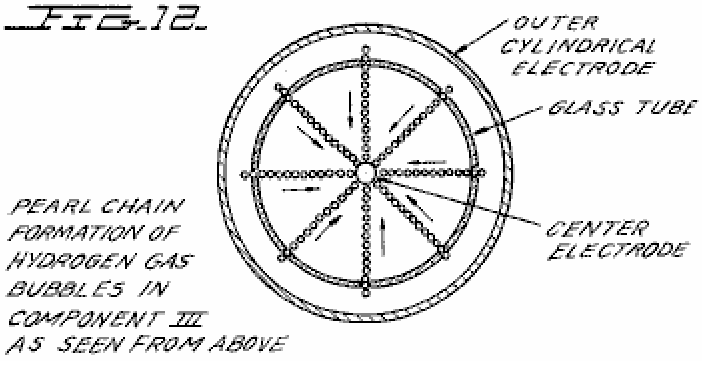

Fig.13 is a plot of the course of the onset of the barrier effect and the unblocking of the barrier effect:

FIG. 13

A PLOT OF THE COURSE OF THE ONSET OF THE BARRIER EFFECT, AND UNBLOCKING IT WITH MECHANICAL TAPPING TO COMPONENTS II, III.

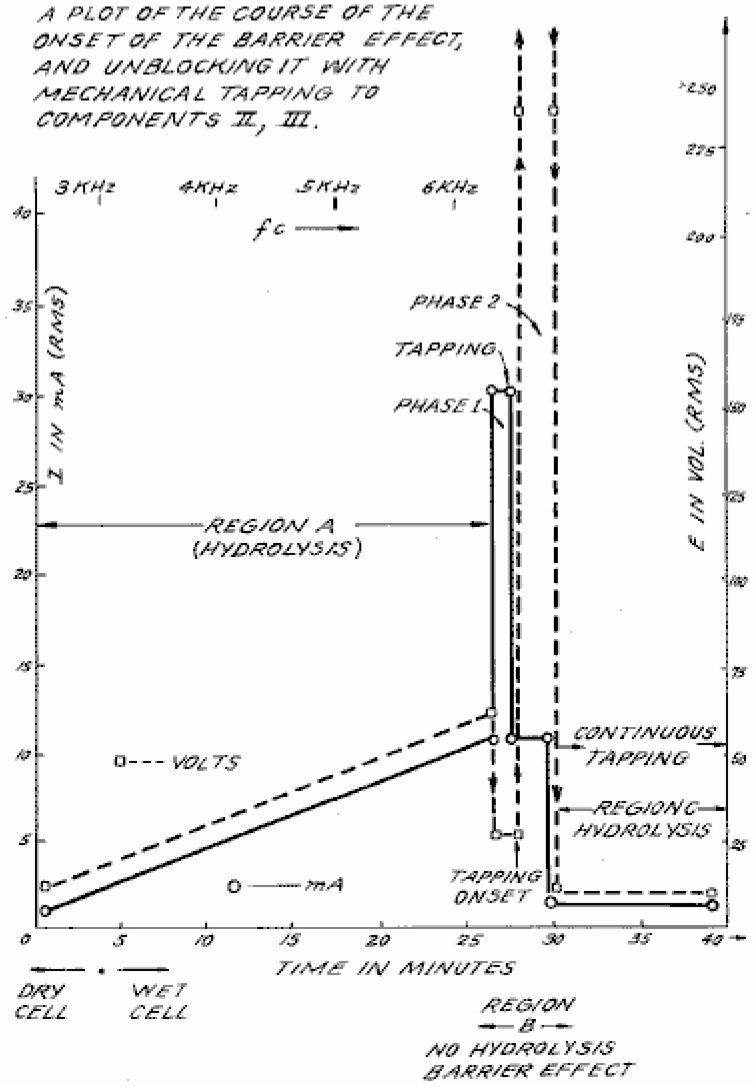

Figs.14A, B, and C are energy diagrams for exergonic reactions:

FIG. 14A.

(a) AN EXERGONIC REACTION. PRODUCTS HAVE A LOWER POTENTIAL ENERGY THAN REACTANTS, THEREFORE, ENERGY IS RELEASED.

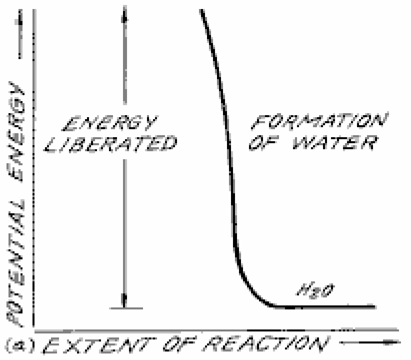

FIG. 14B.

(b) AN ENDERGONIC REACTION PRODUCTS HAVE A HIGHER POTENTIAL ENERGY THAN REACTANTS, CAUSING ENERGY TO BE CONSUMED.

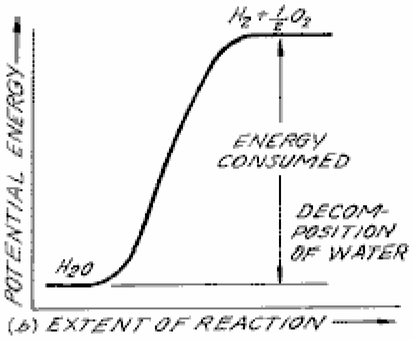

FIG. 14C.

ENERGY DIAGRAM FOR EXERGONIC REACTION. ACTIVATION ENERGY IS BARRIER TO BE OVERCOME FOR REACTION TO PROCEED, & IS SUPPLIED AS A "SPARK" TO THE GASES TO GET IGNITION.

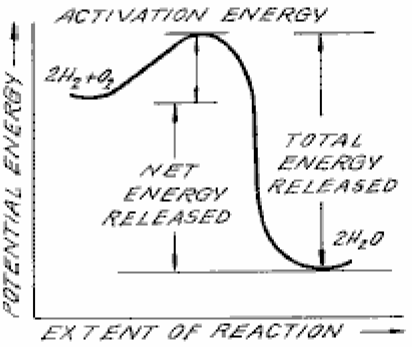

DETAILED DESCRIPTION OF INVENTION:

Section 1:
Apparatus of Invention;

The apparatus of the invention consists of three components, the Electrical Function Generator, the Thermodynamic Device, and the Water Cell.

Component I: The Electrical Function Generator;

This device has an output consisting of an audio frequency (range 20 to 200 Hz) amplitude modulation of a carrier wave (range 200 Hz to 100,000 Hz). The impedance of this output signal is continuously being matched to the load which is the second component, the thermodynamic device. The electrical function generator represents a novel application of circuitry disclosed in my earlier U.S. Pat. Nos. 3,629,521; 3,563,246; and 3,726,762, which are incorporated by reference herein. See **Fig.1** for the block diagram of Component I.

Component II: The Thermodynamic Device;

The thermodynamic device is fabricated of metals and ceramic in the geometric form of coaxial cylinder made up of a central hollow tubular electrode which is surrounded by a larger tubular steel cylinder, said two electrodes comprising the coaxial electrode system which forms the load of the output of the electrical function generator, Component I. Said central hollow tubular electrode carries water, and is separated from the outer cylindrical electrode by a porous ceramic vitreous material. Between the outer surface of the insulating ceramic vitreous material, and the inner surface of the outer cylindrical electrode exists a space to contain the water to be electrolysed. This water cell space comprises the third component (Component III) of the invention. It contains two lengths of tubular Pyrex glass, shown in **Fig.2** and **Fig.3**. The metal electrode surfaces of the two electrodes which are in contact with the water are coated with a nickel alloy.

The coaxial electrode system is specifically designed in materials and geometry to energise the water molecule to the end that it might be electrolysed. The central electrode is a hollow tube and also serves as a conductor of water to the Component III cell. The central tubular electrode is coated with a nickel alloy, and surrounded with a porous vitreous ceramic and a glass tube with the exception of the tip that faces the second electrode. The outer cylindrical electrode is made of a heat conducting steel alloy with fins on the outside, and coated on the inside with a nickel alloy. The central electrode, and the cylindrical electrode are electrically connected by an arching dome extension of the outer electrode which brings the two electrodes at one point to a critical gap distance which is determined by the known quenching distance for hydrogen. See **Fig.2** for an illustration of Component II.

Component III: The Water Cell;
The water cell is a part of the upper end of Component II, and has been described. An enlarged schematic illustration of the cell is presented in FIG. 3. The Component III consists of the water and glass tubes contained in the geometrical form of the walls of cell in Component II, the thermodynamic device. The elements of a practical device for the practice of the invention will include:
(A) Water reservoir; and salt reservoir; and/or salt

(B) Water injection system with microprocessor or other controls which sense and regulate (in accordance with the parameters set forth here:
a. Carrier frequency
b. Current
c. Voltage
d. RC relaxation time constant of water in the cell
e. Nuclear magnetic relaxation constant of water
f. Temperature of hydrogen combustion
g. Carrier wave form
h. RPM of an internal combustion engine (if used)
i. Ignition control system
j. Temperature of region to be heated;

(C) An electrical ignition system to ignite the evolved hydrogen gas fuel.
The important aspects of Component III are the tubular vitreous material, the geometry of the containing walls of the cell, and the geometrical forms of the water molecules that are contained in the cell. A further important aspect of the invention is the manipulation of the tetrahedral geometry of the water molecule by the novel methods and means which will be more fully described in the succeeding sections of this specification.

The different parts of a molecule are bound together by electrons. One of the electron configurations which can exist is the covalent bond which is achieved by the sharing of electrons. A molecule of hydrogen gas, H_2 is the smallest representative unit of covalent bonding, as can be seen in **Fig.4**. The molecule of hydrogen gas is formed by the overlap and pairing of 1s orbital electrons. A new molecular orbit is formed in which the shared electron pair orbits both nuclei as shown in **Fig.4**. The attraction of the nuclei for the shared electrons holds the atoms together in a covalent bond.

Covalent bonds have direction. The electronic orbitals of an uncombined atom can change shape and direction when that atom becomes part of a molecule. In a molecule in which two or more covalent bonds are present the molecular geometry is dictated by the bond angles about the central atom. The outermost lone pair (non-bonding) electrons profoundly affect the molecular geometry.

The geometry of water illustrates this concept. In the ground state, oxygen has the outer shell configuration:

$$\mathbf{1s^2\ 2s^2\ 2p^2_x\ 2p^1_y\ 2p^1_z}$$

In water the 1s electrons from two hydrogen atoms bond with the $2p_y$ and $2p_z$ electrons of oxygen. Since p orbitals lie at right angles to each other (see **Fig.4A**), a bond angle of 90° might be expected. However, the bond angle is found experimentally to be approximately 104°. Theoretically this is explained by the effect of lone pair electrons on hybridised orbitals.

Combined or hybrid orbitals are formed when the excitement of 2s electrons results in their promotion from the ground state to a state energetically equivalent to the 2p orbitals. The new hybrids are termed sp^3 from the combination of one s and three p orbitals (See **Fig.4B**). Hybrid sp^3 orbitals are directed in space from the centre of a regular tetrahedron toward the four corners. If the orbitals are equivalent the bond angle will be 109°28' (See **Fig.15**) consistent with the geometry of a tetrahedron. In the case of water two of the orbitals are occupied by non-bonding electrons (See **Fig.4C**). There is greater repulsion of these lone pair electrons which orbit only one nucleus, compared to the repulsion of electrons in bonding orbitals which orbit two nuclei. This tends to increase the angle between non-bonding orbitals so that it is greater than 109°, which pushes the bonding orbitals together, reducing the bond angle to 104°. In the case of ammonia, NH_3 where there is only one lone pair, the repulsion is not so great and the bond angle is 107°. Carbon forms typical tetrahedral forms and components the simplest being the gas methane, CH_4 (See **Fig.4C** and **Fig.8**). The repulsion of lone pair electrons affects charge distribution and contributes to the polarity of a covalent bond. (See **Fig.16**)

As demonstrated in succeeding sections of this patent specification, a significant and novel aspect of this invention is the manipulation, by electronic methods and means, of the energy level of the water molecule, and the transformation of the water molecule into, and out of, the geometrical form of the tetrahedron. This is made possible only by certain subtle dynamic interactions among the Components I, II, and III of the present invention.

Section 2:
Electrodynamics (Pure Water);

The electrodynamics of Components I, II, and III, will be described individually and in interaction during the progress of pure water reaction rate in time. The reactions of saline water will be described in Section 3. It is to be noted that the output of Component I automatically follows the seven stages (hereinafter Stages A-F) of the reaction rate by varying its parameters of resonant carrier frequency, wave form, current voltage and impedance. All the seven states of the reaction herein described are not necessary for the practical operation of the system, but are included in order to explicate the dynamics and novel aspects of the invention. The seven stages are applicable only to the electrolysis of pure water.

Stage A:
Dry Charging of Component II by Component I;

To make the new system operational, the Component I output electrodes are connected to component II, but no water is placed in the cell of Component III. When Component I output is across the load of Component II we observe the following electrical parameters are observed:

Range of current (I) output with (dry) load:	0 to 25 mA (milliamps) rms.
Range of voltage (E) output with (dry) load:	0 to 250 Volts (AC) rms.

There is no distortion of the amplitude modulated (AM), or of the sine wave carrier whose central frequency, f_c' ranges between 59,748 Hz to 66, 221 Hz, with f_c average = 62, 985 Hz

The carrier frequency varies with the power output in that f_c goes down with an increase in amperes (current). The AM wave form is shown in **Fig.5**. It is to be noted here that the electrical function generator, Component I, has an automatic amplitude modulation volume control which cycles the degree of Amplitude Modulation from 0% to 100%, and then from 100% to 0% every 3.0 seconds. This cycle rate of 3.0 seconds corresponds to the nuclear spin relaxation time, tau/sec, of the water in Component III. The meaning of this effect will be discussed in greater detail in a later section.

In summary, the principal effects to be noted during Stage A -dry charging of Component II are as follows:

a. Tests the integrity of Component I circuitry.
b. Tests the integrity of the coaxial electrodes, and the vitreous ceramic materials of Component II and Component III.
c. Electrostatic cleaning of electrode and ceramic surfaces.

Stage B:

Initial operation of Component I, Component II, and with Component III containing pure water. There is no significant electrolysis of water during Stage B. However, in Stage B the sine wave output of Component I is shaped to a rippled square wave by the changing RC constant of the water as it is treated;

There is an `Open Circuit` reversible threshold effect that occurs in Component III due to water polarisation effects that lead to half wave rectification and the appearance of positive unipolar pulses; and
There are electrode polarisation effects in Component II which are a prelude to true electrolysis of water as evidenced by oxygen and hydrogen gas bubble formation.

Appearance of Rippled Square Waves:

Phase 1: At the end of the Stage A dry charging, the output of Component I is lowered to typical values of: I = 1 ma. E = 24V AC. f_c .congruent.66,234 Hz.

Phase 2: Then water is added to the Component III water cell drop by drop until the top of the centre electrode, 1', in **Fig.3** is covered, and when this water just makes contact with the inner surface of the top outer electrode at 2'. As this coupling of the two electrodes by water happens, the following series of events occur:

Phase 3: The f_c drops from 66,234 Hz, to a range from 1272 Hz to 1848 Hz. The current and voltage both drop, and begin to pulse in entrainment with the water nuclear spin relaxation constant, tau =3.0 sec. The presence of

the nuclear spin relaxation oscillation is proven by a characteristic hysteresis loop on the X-Y axes of an oscilloscope.
I = 0 to 0.2 mA surging at .tau. cycle
E = 4.3 to 4.8V AC surging at .tau. cycle
The sine wave carrier converts to a rippled square wave pulse which reflects the RC time constant of water, and it is observed that the square wave contains higher order harmonics. See **Fig.6**:
With the appearance of the rippled square wave, the threshold of hydrolysis may be detected (just barely) as a vapour precipitation on a cover glass slip placed over the Component III cell and viewed under a low power microscope.

The 'Open Circuit' Reversible Threshold Effect:
Phase 4 A secondary effect of the change in the RC constant of water on the wave form shows up as a full half wave rectification of the carrier wave indicating a high level of polarisation of the water molecule in tetrahedral form at the outer electrode.

With the already noted appearance of the rippled square wave, and the signs of faint vapour precipitation which indicate the earliest stage of electrolysis, it is possible to test for the presence of a reversible hydrolysis threshold. This test is carried out by creating an open circuit between Components I and II, i.e., no current flows. This is done by lowering the water level between the two electrodes in the region --- 1' and 2' shown in **Fig.3**; or by interrupting the circuit between Component I and II, while the Component I signal generator is on and oscillating.

Immediately, with the creation of an `open circuit` condition, the following effects occur:
(a) The carrier frequency, f_c, shifts from Phase 4 valve 1272 Hz to 1848 Hz to 6128 Hz.
(b) The current and voltage drop to zero on the meters which record I and E, but the oscilloscope continues to show the presence of the peak-to-peak (p-p) voltage, and the waveform shows a remarkable effect. The rippled square wave has disappeared, and in its place there appear unipolar (positive) pulses as follows in **Fig.6A**.

The unipolar pulse frequency stabilises to ca. 5000 Hz. The unipolar pulses undergo a 0 to 1.3 volt pulsing amplitude modulation with .tau. at 3.0 seconds. Thus, there exists a pure open circuit reversible threshold for water electrolysis in which the water molecules are capacitor charging and discharging at their characteristic low frequency RC time constant of 0.0002 seconds. It is to be noted that pure water has a very high dielectric constant which makes such an effect possible.

The pulsing amplitude modulation of the voltage is determined by the Hydrogen Nuclear Spin Relaxation constant of 3.0 seconds. It is to be noted that the positive pulse spikes are followed by a negative after-potential. These pulse wave forms are identical to the classic nerve action potential spikes found in the nervous system of all of the living species which have a nervous system. The fact that these unipolar pulses were observed arising in water under the conditions of reversible threshold hydrolysis has a profound significance. These findings illuminate and confirm the Warren McCulloch Theory of water "crystal" dynamics as being the foundation of neural dynamics; and the converse theory of Linus Pauling which holds that water clathrate formation is the mechanism of neural anesthesia.

Phase 5: The effects associated with reversible threshold electrolysis are noted only in passing, since they reflect events which are occurring on the electrode surfaces of Component II, the Thermodynamic Device.

A principal effect which occurs in Stage B, Phase 3, in Component II, (the thermodynamic device), is that the two electrodes undergo stages of polarisation. It has been observed in extensive experiments with different kinds of fluids in the cell of Component II , i.e., distilled water, sea water, tap water, Ringers solution, dilute suspensions of animal and human blood cells, etc. that the inner surface of the outer ring electrode at 3' in **Fig.3** (the electrode that is in contact with the fluid) becomes negatively charged. Referring to **Fig.7**, this corresponds to the left hand columnar area marked, "Electrode .crclbar.".

Electrode Polarisation Effects at the Interface Between Components II and III:
Concurrently with the driver pulsing of Component I at the .tau. constant cycle which leads to electrode polarisation effects in Component II, there is an action on Component III which energises and entrains the water molecule to a higher energy level which shifts the bond angle from 104° to the tetrahedral form with angle 109°28' as shown in **Fig.8** and **Fig.15**.

This electronic pumping action is most important, and represents a significant part of the novel method of this invention for several reasons. First, the shift to the tetrahedral form of water increases the structural stability of the water molecule, thereby making it more susceptible to breakage at the correct resonant frequency, or frequencies. Second, increasing the polarisation of the water molecule makes the lone pair electrons, S- connected with the oxygen molecule more electronegative; and the weakly positive hydrogen atoms, S+ more positive. See **Fig.9** and **Fig.22**.

As the outer electrode becomes more electrically negative, the central electrode becomes more electrically positive as will be shown. As the polarity of the water molecule tetrahedron increases, a repulsive force occurs between the two S+ apices of the water tetrahedron and the negatively charged electrode surface within the region of the Helmholtz layer, as shown in **Fig.7**. This effect "orients" the water molecule in the field, and is the well-known "orientation factor" of electrochemistry which serves to catalyse the rate of oxygen dissociation from the water molecule, and thereby causes the reaction rate to proceed at the lowest energy levels. See **Fig.10** for an example of how the orientation factor works. Near the end of Stage B, the conditions are established for the beginning of the next stage, the stage of high efficiency electrolysis of water.

Stage C:
Generation of the complex wave form frequencies from Component I to match the complex wave form resonant frequencies of the energised and highly polarised water molecule in tetrahedral form with angles, 109°28' are carried out in Stage C. In the operation of the invention active bubble electrolysis of water is initiated following Stage B, phase 3 by setting (automatically) the output of Component I to:
I = 1 mA., E = 22V AC-rms, causing the rippled square wave pulses to disappear with the appearance of a rippled sawtooth wave. The basic frequency of the carrier now becomes, f_c = 3980 Hz.

The wave form now automatically shifts to a form found to be the prime characteristic necessary for optimum efficiency in the electrolysis of water and illustrated in **Fig.11**. In the wave form of **Fig.11**, the fundamental carrier frequency, f_c = 3980 Hz., and a harmonic modulation of the carrier is as follows:

1st Order Harmonic Modulation (OHM) = 7960 Hz.
2nd Order Harmonic Modulation (II OHM) = 15,920 Hz.
3rd Order Harmonic Modulation (III OHM) = 31,840 Hz.
4th Order Harmonic Modulation (IV OHM) = 63,690 Hz.

What is believed to be happening in this IV OHM effect is that each of the four apices of the tetrahedron water molecule is resonant to one of the four harmonics observed. It is believed that the combination of negative repulsive forces at the outer electrode with the resonant frequencies just described work together to shatter the water molecule into its component hydrogen and oxygen atoms (as gases). This deduction is based on the following observations of the process through a low power microscope. The hydrogen bubbles were seen to originate at the electrode rim, 4', of **Fig.3**. The bubbles then moved in a very orderly `pearl chain` formation centripetally (like the spokes of a wheel) toward the central electrode, 1' of **Fig.3**, (**Fig.12** shows a top view of this effect).

Thereafter, upon lowering the output of Component I, the threshold for electrolysis of water as evidenced by vapour deposition of water droplets on a glass cover plate over the cell of Component III, is:

I = 1 mA, E = 10V so, Power = 10 mW

with all other conditions and waveforms as described under Stage C, supra. Occasionally, this threshold can be lowered to:

I = 1 ma, E = 2.6V so, Power = 2.6 mW

This Stage C vapour hydrolysis threshold effect cannot be directly observed as taking place in the fluid because no bubbles are formed --- only invisible gas molecules which become visible when they strike a glass plate and combine into water molecules and form droplets which appear as vapour.

Stage D:
Production of hydrogen and oxygen gas at an efficient rate of water electrolysis is slowed in Stage D when a barrier potential is formed, which blocks electrolysis, irrespective of the amount of power applied to Components II and III.

A typical experiment will illustrate the problems of barrier potential formation. Components I, II, and III are set to operate with the following parameters:

I = 1 ma, E = 11.2V so, Power = 11.2 mW (at the start, rising to 100 mW later)

This input to Component III yields, by electrolysis of water, approximately 0.1 cm^3 of hydrogen gas per minute at one atmosphere and $289^{O}K$. It is observed that as a function of time the f_c crept up from 2978 Hz to 6474 Hz over 27 minutes. The current and the voltage also rose with time. At the 27th minute a barrier effect blocked the electrolysis of water, and one can best appreciate the cycle of events by reference to **Fig.13**.

Stage E:

The Anatomy of the Barrier Effect:
Region A: Shows active and efficient hydrolysis
Region B: The barrier region effect can be initiated with taps of the finger, or it can spontaneously occur as a function of time.
Phase a: The current rose from 1 mA to 30 mA. The voltage fell from 22 volts to 2.5 V.
Phase b: If component II is tapped mechanically during Phase a supra --- it can be reversed as follows: The current dropped from 30 mA to 10 mA. The voltage shot up from 5 volts to over 250 volts (off scale).

Throughout ‘Phase a’ and ‘Phase b’, all hydrolysis has ceased. It was observed under the microscope that the inner surface of the outer electrode was thickly covered with hydrogen gas bubbles. It was reasoned that the hydrogen gas bubbles had become trapped in the electrostricted layer, because the water molecule tetrahedrons had flipped so that the S+ hydrogen apices had entered the Helmholtz layer and were absorbed to the electronegative charge of the electrode. This left the S- lone pair apices facing the electrostricted layer. This process bound the newly forming H^+ ions which blocked the reaction
$H^+ + H^+ + 2e \rightarrow H_2$ (gas)

Stage F:

Region C: It was found that the barrier effect could be unblocked by some relatively simple procedures:
(a) Reversing the output electrodes from Component I to Component II, and/or:
(b) Mechanically tapping the Component III cell at a frequency T/2 = 1.5 seconds per tap.
These effects are shown in FIG. 12 and induce the drop in barrier potential from:

I = 10 mA to 1 ma, E = 250V to 4V so, Power fell from 2.5W to 4 mW

Upon unblocking of the barrier effect, electrolysis of water resumed with renewed bubble formation of hydrogen gas.

The barrier potential problem has been solved for practical application by lowering the high dielectric constant of pure water, by adding salts (NaCl, KOH, etc.) to the pure water thereby increasing its conductivity characteristics. For optimum efficiency the salt concentration need not exceed that of sea water (0.9% salinity) in Section 3, "Thermodynamics of the Invention", it is to be understood that all water solutions described are not "pure" water as in Section B, but refer only to saline water.

Section 3:
The Thermodynamics of the Invention (Saline Water);

Introduction: (water, hereinafter refers to saline water);
The thermodynamic considerations in the normal operations of Components I, II, and III in producing hydrogen as fuel, and oxygen as oxidant during the electrolysis of water, and the combustion of the hydrogen fuel to do work in various heat engines is discussed in this section.

In chemical reactions the participating atoms form new bonds resulting in compounds with different electronic configurations. Chemical reactions which release energy are said to be exergonic and result in products whose chemical bonds have a lower energy content than the reactants. The energy released most frequently appears as heat. Energy, like matter, can neither be created nor destroyed according to the Law of Conservation of Energy. The energy released in a chemical reaction, plus the lower energy state of the products, is equal to the original energy content of the reactants. The burning of hydrogen occurs rather violently to produce water as follows:

$2H_2 + O_2 \rightarrow 2H_2O - \Delta H$ 68.315 Kcal/mol (this is the enthalpy, or heat of combustion at constant pressure) where 18 gms = 1 mol.

The chemical bonds of the water molecules have a lower energy content than the hydrogen and oxygen gases which serve at the reactants. Low energy molecules are characterised by their stability. High energy molecules are inherently unstable. These relations are summarised in the two graphs of **Fig.14**. It is to be noted that **Fig.14B** shows the endergonic reaction aspect of the invention when water is decomposed by electrolysis into hydrogen and oxygen.

Fig.14A shows the reaction when the hydrogen and oxygen gases combine, liberate energy, and re-form into water. Note that there is a difference in the potential energy of the two reactions. **Fig.14C** shows that there are two components to this potential energy. The net energy released, or the energy that yields net work is labelled in the diagram as “Net Energy Released”, and is more properly called the free energy change denoted by the Gibbs function, $-.\Delta.G$.

The energy which must be supplied for a reaction to achieve (burning) spontaneity is called the "Activation Energy". The sum of the two is the total energy released. A first thermodynamic subtlety of the thermodynamic device of the invention is noted in Angus McDougall's Fuel Cells, Energy Alternative Series, The MacMillan Press Ltd., London, 1976, where on page 15 it is stated:

"The Gibbs function is defined in terms of the enthalpy H, and the entropy S of the system:

G = H-T S (where .tau. is the thermodynamic temperature) . A particularly important result is that for an electrochemical cell working reversibly at constant temperature and pressure, the electrical work done is the net work and hence,

. $\Delta.G = -w_e$

For this to be a reversible process, it is necessary for the cell to be on `open circuit`, that is, no current flows and the potential difference across the electrodes is the EMF, E. Thus,

. $\Delta.G = -zFE$

(where F is the Faraday constant --- the product of the Avogadro Constant + $N_A = 6.022045 \times 10^{23}$ *mole*$^{-1}$*, and the charge on the electron, e = 1.602 189 x* 10^{-19} *C --- both in SI units; and z is the number of electrons transported.) when the cell reaction proceeds from left to right."*

It is to be noted that the Activation Energy is directly related to the controlling reaction rate process, and thus is related to the Gibbs free energy changes. The other thermodynamic subtlety is described by S. S. Penner in his work: Penner, S. S. and L. Icerman, Energy, Vol, II, Non-Nuclear Energy Technologies. Addison-Wesley Publishing Company, Inc. Revised Edition, 1977. Reading, Mass. where on page 140 it is stated that:

"It should be possible to improve the efficiency achieved in practical electrolysis to about 100% because, under optimal operating conditions, the theoretically-attainable energy conversion by electrolysis is about 120% of the electrical energy input. The physical basis for this last statement will now be considered:

"A useful definition for energy efficiency in electrolysis is the following: the energy efficiency is the ratio of the energy released from the electrolysis products formed (when they are subsequently used) to the energy required to effect electrolysis. The energy released by the process

H_2 *(gas) + (1/2)*O_2 *(gas)* $\rightarrow$ H_2O *(liquid)*

under standard conditions (standard conditions in this example are: (1) atmospheric pressure = 760 mm Hg and (2) temperature = 298.16^{O}*K. =* 25^{O}*C. =* 77^{O}*F.) is 68.315 Kcal and is numerically equal to the enthalph change (.*Δ*.H) for the indicated process. On the other hand, the minimum energy (or useful work input) required at constant temperature and pressure for electrolysis equals the Gibbs free energy change (.*Δ*.G). There is a basic relation derivable from the first and second laws of thermodynamics for isothermal changes, which shows that:*

$.\Delta.G = .\ \Delta.H - T.\ \Delta.S$

where .Δ*.S represents the entropy change for the chemical reaction. The Gibbs free energy change (.*Δ*.G) is also related to the voltage (E) required to implement electrolysis by Faraday's equation, viz.*

$E = (.\Delta.G/23.06n)$ *volts*

where . Δ*.G is in Kcal/mol and n is the number of electrons (or equivalents) per mol of water electrolysed and has the numerical value 2.*

At atmospheric pressure and 300^{O}*K., .*Δ*.H = 68.315 Kcal/mol of* H_2O *(i) and .*Δ*.G = 56.62 Kcal/mole of* H_2O *(i) for the electrolysis of liquid water. Hence, the energy efficiency of electrolysis at* 300^{O}*K. is about 120%.*

(When) H_2 *(gas) and* O_2 *(gas) are generated by electrolysis, the electrolysis cell must absorb heat from the surroundings, in order to remain at constant temperature. It is this ability to produce gaseous electrolysis products with heat absorption from the surroundings that is ultimately responsible for energy-conversion efficiencies during electrolysis greater than unity."*

Using the criteria of these two authorities, it is possible to make a rough calculation of the efficiency of the present invention.

Section 4:
Thermodynamic Efficiency of the Invention;

Efficiency is deduced on the grounds of scientific accounting principles which are based on accurate measurements of total energy input to a system (debit), and accurate measurements of total energy (or work) obtained out of the system (credit). In principle, this is followed by drawing up a balance sheet of energy debits and credits, and expressing them as an efficiency ration, ε.

$$\eta = \frac{\text{Credit}}{\text{Debit}} = \frac{\text{Energy Out}}{\text{Energy In}} < 1$$

The energy output of Component I is an alternating current passing into a highly non-linear load, i.e., the water solution. This alternating current generator (Component I) is so designed that at peak load it is in resonance (Components I, II, III), and the vector diagrams show that the capacitive reactance, and the inductive reactance are almost exactly 180° out of phase, so that the net power output is reactive, and the dissipative power is very small. This design insures minimum power losses across the entire output system. In the experiments which are now to be described the entire emphasis was placed on achieving the maximum gas yield (credit) in exchange for the minimum applied energy (debit).

The most precise way to measure the applied energy to Components II and III is to measure the Power, P, in Watts, W. This was done by precision measurements of the volts across Component II as root mean square (rms) volts; and the current flowing in the system as rms amperes. Precisely calibrated instruments were used to take these two measurements. A typical set of experiments (using water in the form of 0.9% saline solution = 0.1540 molar concentration) to obtain high efficiency hydrolysis gave the following results:

ms Current = 25 mA to 38 mA (0.025 A to 0.038 A)
rms Volts = 4 Volts to 2.6 Volts

The resultant ratio between current and voltage is dependent on many factors, such as the gap distance between the central and ring electrodes, dielectric properties of the water, conductivity properties of the water, equilibrium states, isothermal conditions, materials used, and even the presence of clathrates. The above current and voltage values reflect the net effect of various combinations of such parameters. The product of rms current, and rms volts is a measure of the power, P in watts:

$P = I \times E = 25$ mA x 4.0 volts = 100 mW (0.1 W)
$P = I \times E = 38$ mA x 2.6 volts = 98.8 mW (0.0988 W)

At these power levels (with load), the resonant frequency of the system is 600 Hz (plus or minus 5 Hz) as measured on a precision frequency counter. The wave form was monitored for harmonic content on an oscilloscope, and the nuclear magnetic relaxation cycle was monitored on an X-Y plotting oscilloscope in order to maintain the proper hysteresis loop figure. All experiments were run so that the power in Watts, applied through Components I, II, and III ranged between 98.8 mW to 100 mW. Since, by the International System of Units --- 1971 (SI), One-Watt-second (Ws) is exactly equal to One Joule (J), the measurements of efficiency used these two yardsticks (1 Ws = 1 J) for the debit side of the measurement.

The energy output of the system is, of course, the two gases, hydrogen (H_2) and oxygen ($1/2O_2$), and this credit side was measured in two laboratories, on two kinds of calibrated instruments, namely, a Gas Chromatography Machine, and, a Mass Spectrometer Machine.

The volume of gases, H_2 and $(1/2)O_2$, was measured as produced under standard conditions of temperature and pressure in unit time, i.e., in ccs per minute (cc/min), as well as the possibly contaminating gases, such as air oxygen, nitrogen and argon; carbon monoxide, carbon dioxide, water vapour, etc.

The electrical, and gas, measurements were reduced to the common denominator of Joules of energy so that the efficiency accounting could all be handled in common units. The averaged results from many experiments follow. The Standard Error between different samples, machines, and locations is plus or minus 10%, and only the mean was used for all the following calculations.

Section 5:
Endergonic Decomposition of Liquid Water;

Thermodynamic efficiency for the endergonic decomposition of saline liquid water into gases under standard atmosphere (754 to 750 m.m. Hg), and standard isothermal conditions @ 25^{O}C. = 77^{O}F. = 298.16^{O}K., according to the following reaction:

$H_2O(1) \rightarrow H_2$ (g) + $(1/2)O_2$ (g) + .Δ.G 56.620 KCal/mole

As already described, .Δ.G is the Gibbs function (**Fig.14B**). A conversion of Kcal to the common units, Joules, by the formula, One Calorie = 4.1868 Joules was made.

.Δ.G = 56.620 Kcal x 4.1868 J = 236,954 J/mol of H_2O (1) where, 1 mole is 18 gms.

.Δ.G = the free energy required to yield an equivalent amount of energy from H_2O in the form of the gases, H_2 and $(1/2)O_2$.

To simplify the calculations, the energy required to produce 1.0 cc of H_2O as the gases, H_2 and $(1/2)O_2$ was determined. There are (under standard conditions) 22,400 cc = V, of gas in one mole of H_2O. Therefore:

$$\frac{\Delta G}{V} = \frac{236{,}954 \text{ J}}{22{,}400 \text{ cc}} = 10.5783 \text{ J / cc}$$

The electrical energy required to liberate 1.0 cc of the H_2O gases (where H_2 = 0.666 parts, and $(1/2)O_2$ = 0.333 parts, by volume) from liquid water is then determined. Since P = 1 Ws = 1 Joule, and V=1.0 cc of gas = 10.5783 Joules, then:

PV = 1 x 10.5783 J = 10.5783 Ws

Since the experiments were run at 100 mW (0.1 W) applied to the water sample in Component II, III, for 30 minutes, the ideal (100% efficient) gas production at this total applied power level was calculated.
0.1 Ws x 60 sec x 30 min = 180.00 Joules (for 30 min)
The total gas production at Ideal 100% efficiency is,
180.00 J / 10.5783 J/cc = 17.01 cc H_2O (g)
The amount of hydrogen present in the 17.01 cc H_2O (g) was then calculated.
17.01 cc H_2O (gas) x 0.666 H_2 (g) = 11.329 cc H_2 (g)
17.01 cc H_2O (g) x 0.333 $(1/2)O_2$ (g) = 5.681 cc $(1/2)O_2$ (g)
Against this ideal standard of efficiency of expected gas production, the actual amount of gas produced was measured under: (1) standard conditions as defined above (2) 0.1 Ws power applied over 30 minutes. In the experiments, the mean amount of H_2 and $(1/2)O_2$ produced, as measured on precision calibrated GC, and MS machines in two different laboratories, where the S.E. is +/-10%, was,

Measured Mean = 10.80 cc H_2 (g)
Measured Mean = 5.40 cc $(1/2)O_2$ (g)
Total Mean = 16.20 cc H_2O(g)

The ratio, ε, between the ideal yield, and measured yield is:

$$\eta = \frac{\text{Measured } H_2(g)}{\text{Ideal } H_2(g)} = \frac{10.80 \text{ cc}}{11.33 \text{ cc}} = 91.30\%$$

Section 6:
Energy Release;
The total energy release (as heat, or electricity) from an exergonic reaction of the gases, H_2 and O_2, is given by:

$$H_2(g) + (\tfrac{1}{2})O_2(g) \rightarrow H_2O(\ell) - \Delta H \text{ } 68.315 \text{ Kcal/mol} = (-\Delta H \text{ } 286{,}021 \text{ Joules})/\text{mol}$$

It is possible (Penner, Op. Cit., p.128) to get a total heat release, or total conversion to electricity in a fuel cell, in the above reaction when the reactants are initially near room temperature (298.16^{O}K.), and the reactant product (H_2O) is finally returned to room temperature. With this authoritative opinion in mind, it is desirable to determine the amount of energy released (ideal) from the exergonic experiment. The total energy of 1.0 cc of H_2O (1), as above is:

$$1.0 \text{ cc } \Delta H = \frac{286{,}021 \text{ J/mol}}{22{,}400 \text{ cc/mol}} = 12.7687 \text{ J/cc } H_2O$$

for H_2 = 12.7687 x 0.666 = 8.509 J/0.66 cc H_2 for O_2 = 12.7687 x 0.333 = 4.259 J/0.33 cc $(1/2)O_2$ The energy produced from the gases produced in the experiments in an exergonic reaction was:

16.20 cc H_2O (g) x 12.7687 J/cc H_2O = 206,8544 J.

The overall energy transaction can be written as:

$$\frac{\text{EXERGONIC}}{\text{ENDERGONIC}} - \eta - \frac{-\Delta H}{+\Delta G} = \frac{206{,}854.4 \text{ J}}{180{,}000 \text{ J}} = 114.92\%$$

In practical bookkeeping terms the balance of debits and credits, n = (-.Δ.H) - (+.Δ.G), so:

n = 206.8544 J - 180.0 = + 26.8544 J (surplus).

Since, in the invention, the gas is produced where and when needed, there is no additional cost accounting for liquefaction, storage, or transportation of the hydrogen fuel, and the oxygen oxidant. Therefore, the practical efficiency, is:

$$\eta_P = \frac{26.8544\ \text{J}}{180.0000\ \text{J}} = 14.919\% \text{ (as net return on the original energy investment)}$$

In practical applications, the energy output (exergonic) of the Component II System can be parsed between the electrical energy required to power the Component I System, as an isothermal closed loop; while the surplus of approximately 15% can be shunted to an engine (heat, electrical, battery, etc.) that has a work load. Although this energy cost accounting represents an ideal model, it is believed that there is enough return (approximately 15%) on the capital energy investment to yield a net energy profit that can be used to do useful work.

CONCLUSION:

From the foregoing disclosure it will be appreciated that the achievement of efficient water splitting through the application of complex electrical waveforms to energised water molecules, i.e. tetrahedral molecules having bonding angles of 109°28', in the special apparatus described and illustrated, will provide ample and economical production of hydrogen gas and oxygen gas from readily available sources of water. It is to be understood, that the specific forms of the invention disclosed and discussed herein are intended to be representative and by way of illustrative example only, since various changes may be made therein without departing from the clear and specific teachings of the disclosure. Accordingly, reference should be made to the following appended claims in determining the full scope of the method and apparatus of the present invention.

SHIGETA HASEBE

US Patent 4,105,528 **8th August 1978** **Inventor: Shigeta Hasebe**

APPARATUS FOR DECOMPOSITION OF AQUEOUS LIQUID

Please note that this is a re-worded excerpt from this patent. This patent describes an electrolysis system which it is claimed has demonstrated ten times the efficiency that Faraday considered to be the maximum possible.

ABSTRACT

An apparatus for decomposition of liquid, in which spiral negative and positive electrodes are arranged close together but not touching. These two electrodes are supplied with power through external terminals and the electrolyte is caused to flow between the negative and positive electrodes for the electrolysis between two electrodes under the function of the potential magnetic field formed by the coil current which is generated by the electrodes with active movement of an electrolytic ion so that the electrolysis of water takes place smoothly under the spin functions of the atom and electron.

BACKGROUND AND SUMMARY OF THE INVENTION

This invention relates to an apparatus for decomposition of liquid where a flowing electrolyte is subjected to electrolysis for the production of gases.

As is well known, water is composed of hydrogen atoms and oxygen atoms. When water is sufficiently magnetised, each constitutive atom is also weakly magnetised to rotate the elementary particle in a regular direction. This rotation of the elementary particle is generally called "spin". That is, the spin function is caused by an electron, atomic nucleus, atom and even by the molecule. When a negative electrode is immersed in the electrolyte - Sodium Hydroxide (“lye”) solution - with a view to applying a voltage to it in order to cause the elementary particle to react with the electric field, the coupling state of the hydrogen with the oxygen is varied and the electrolysis is facilitated by the spin.

In the present invention, spiral negative and positive electrodes are arranged close together but not touching and these two electrodes are supplied with power through external terminals and the electrolyte is caused to flow between the negative and positive electrodes. Thus, the electrolyte is subjected to the electrolysis between two electrodes while within a magnetic field formed by the coil current which is generated by the electrodes with active movement of an electrolytic ion (Na^+, OH^-) so that the electrolysis of water takes place smoothly under the spin functions of the atom and electron.

It has been confirmed that the rate of the electrolysis of water using this invention is approximately 10 or more times (approximately 20 times when calculated) than that produced by conventional electrolysis.

The design of the electrolytic cell of this invention is such that the electrolyte flowing through the supply ports provided at the lower portion of the electrolytic cell is subjected to the magnetic field produced by a permanent magnet and the electrodes cause it to be further subjected to magnetic and electric fields which cause it to obtain a sufficient spin effect.

It is, therefore, a general object of the invention to provide a novel apparatus for decomposition of liquid in which an electrolyte (NaOH) solution is subjected to magnetic fields to cause electrolysis assisted by the spin of the water molecules which produces a great amount of gas with less consumption of electrical energy.

A principal object of the invention is to provide an apparatus for decomposition of liquid which has a liquid circulating system for the separation of gas and liquid in which positive and negative spiral electrodes are arranged across the flow path of the liquid and the opposite ends of the electrodes being provided with magnetic materials to augment the effect caused by the applied voltage across a liquid passing through a magnetic field caused by the positive and negative spiral electrodes, thereby to promote generation and separation of cat-ions and an-ions with a high efficiency in production of a large quantity of gases.

Other objects and advantages of the present invention will become apparent through the detailed description which follows.

BRIEF DESCRIPTION OF THE DRAWINGS

The invention will be described more in detail in the following with reference to the accompanying drawings, wherein:

Fig.1 is a partially cross-sectional schematic elevation of an apparatus in accordance with the invention;

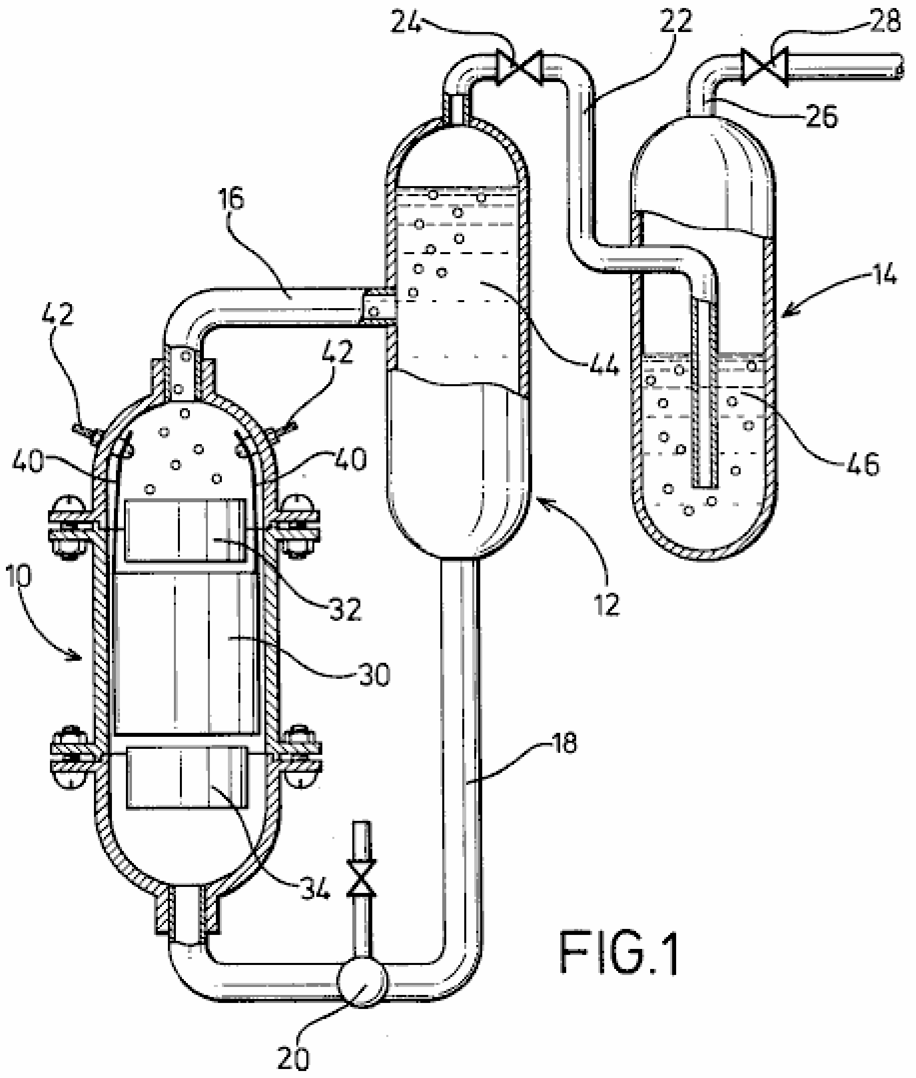

FIG.1

Fig.2 is a perspective view of electrodes arranged in accordance with the invention;

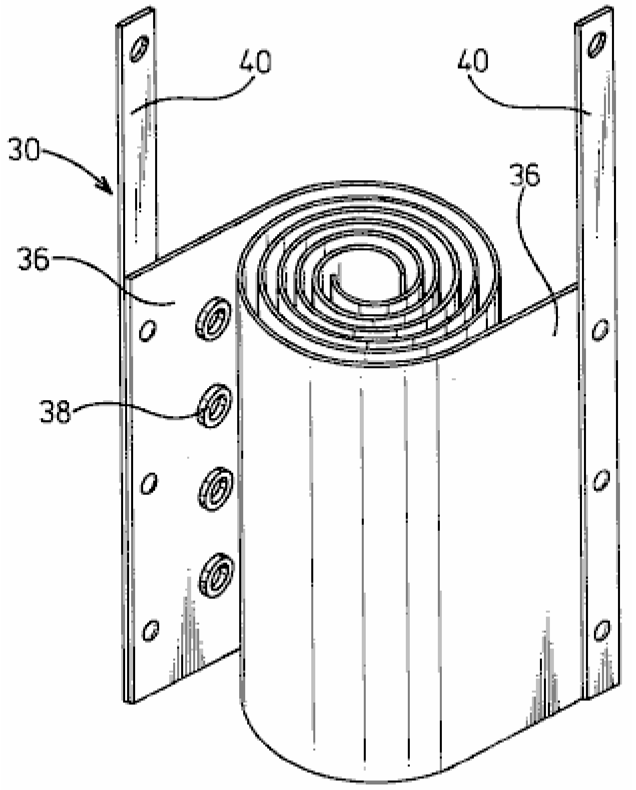

FIG.2

Fig.3 is a plan view of electrodes with magnetic materials.

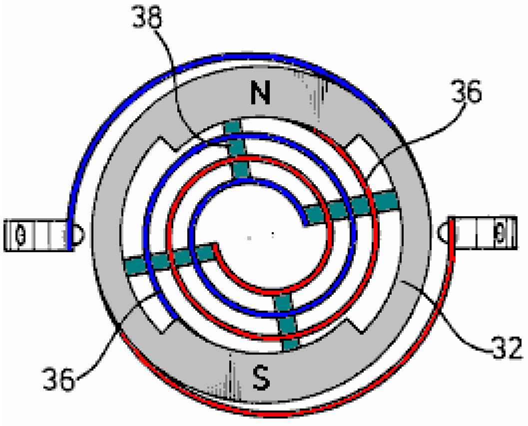

FIG.3

DESCRIPTION OF THE PREFERRED EMBODIMENT

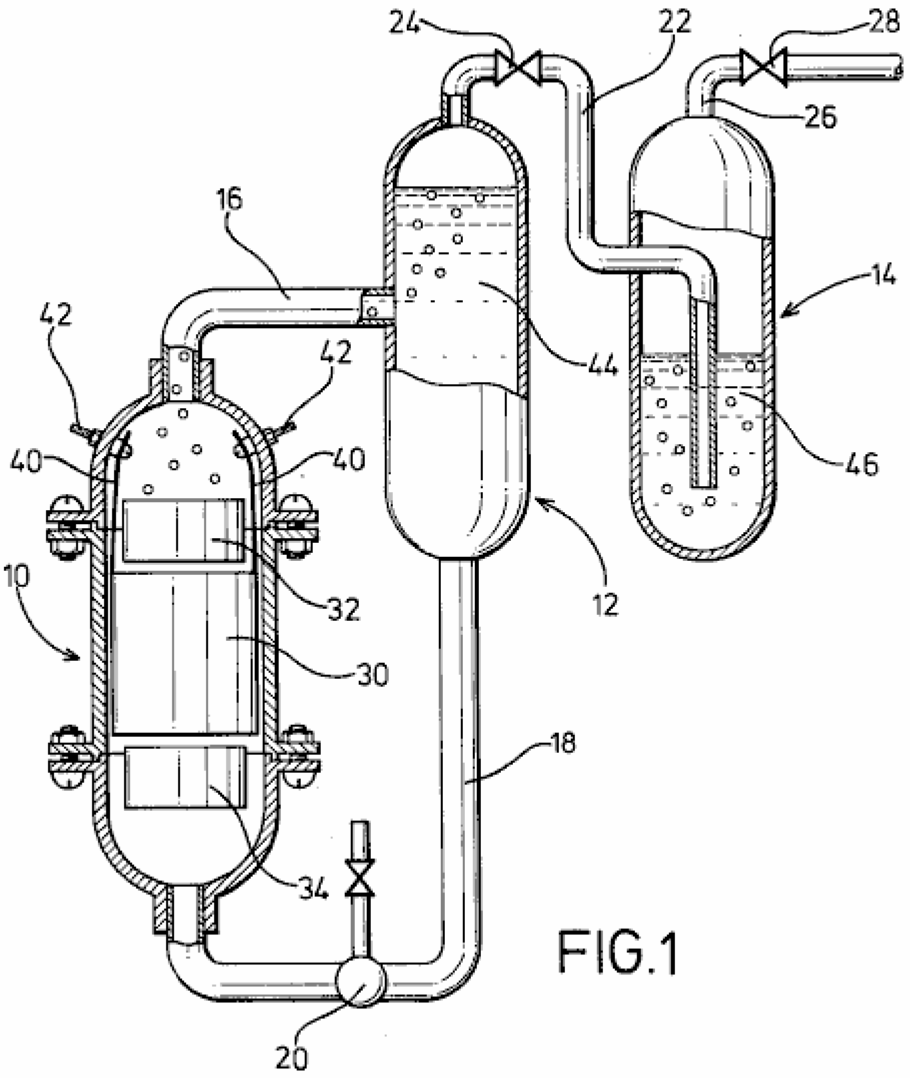

FIG.1

In **Fig.1**, an electrolysis cell **10**, a gas-liquid separation tank **12** and a gas-washing tank **14** are vertically arranged as shown with the electrolytic cell **10** being positioned a little lower than the tanks.

Cell **10** and tanks **12** and **14** are connected together by a delivery pipe **16** which connects the top of the electrolytic cell **10** with the middle of the gas-liquid separation tank **12**. A feed-back pipe **18** containing a pump **20**, is provided to connect the bottom of the gas-liquid separation tank **12,** with the bottom of the electrolytic cell **10**. Also provided is pipe **22**, which runs from the top of the gas-liquid separation tank **12** through a valve **24** to the bottom of the gas-washing tank **14**. A drain pipe **26**, provided with a valve **28**, is taken from the top of the gas-washing tank **14**.

In the electrolytic cell **10**, positive and negative spiral electrodes **30** of diameters suited to the internal diameter of the electrolytic cell **10** are arranged coaxially. At the upper and lower parts of the spiral electrodes **30** are arranged magnet rings **32** and **34** made from ferrite or similar material, positioned so that North and South poles are opposite one another to create a magnetic field which is at right angles to the axis of the electrolytic cell.

Electrodes **30** are composed of two metal strips **36** which are wound into spiral shapes with cylindrical insulating spacers **38** made of rubber or a similar material, placed between them and attached to the surface of the metal strips **36**. From the metal strips **36,** wires **40**, are taken to the positive and negative power supply terminals, via connectors provided in the inner wall of the electrolytic cell.

The electrolytic cell **10** and the gas-liquid separation tank **12** are filled with a electrolyte **44** which is circulated by the pump **20**, while the gas-washing tank **14** is filled with a washing liquid **46** to such a level that gases gushing out of the conduit **22** are thoroughly washed.

The apparatus of the present invention may be well be used for the electrolysis of flowing water for the production of hydrogen gas and oxygen gas at a high efficiency. That is to say, the electrolytic cell **10** and the gas-liquid separation tank **12** are filled with the electrolyte **44** which is caused by pump **20** to flow through a magnetic field in an vortex path in which positive and negative magnetic poles N, S of the magnets **32** and **34** face each other to produce a transverse field, and through the metal plates **36** of the vortical electrodes **30** to generate an orientation for the electrical migration of cat-ions and an-ions, causing an increased gas separation rate and enhancement of the electrolysis.

In particular, the flowing oxygen gas serves to facilitate an aeration of the electrolyte since it has varying magnetic effects as it passes through the magnetic field. The spiral electrodes **30** of this invention, create a remarkable increase in the rate of electrolysis. This is caused by the continuously decreasing space between the electrodes **30** which causes the flow velocity to increase as the flow progresses along its path. This causes turbulence which instantly removes bubbles of gas from the surface of the electrodes, allowing fresh ions full contact with the metal surfaces, thus raising the efficiency of the cell.

The spiral coiling of the electrodes also enables a very desirable reduction in the size of the cell, while increasing the electrode area and improving its contact with the electrolyte **44**. There is also a relatively short migration distance of ions which also promotes rapid gas production. On the other hand, insulating spacers **38** interposed between the metal strips **36** serves to create the desired turbulence of the electrolyte passing through the cell.

The liquid circulating system for separation of gas and liquid requires no other driving unit except the circulation pump **20** to achieve separation of gas and liquid by utilising differences in water heads between cell **10** and tanks **12** and **14**. In other words, a flow of gas-liquid mixture supplied from electrolytic cell **10** is fed into the gas-liquid separation tank **12** where, due to the difference in buoyancy of gases and liquid, the gas rises and is fed into the gas-washing tank **14** while the liquid moves down and is returned to the electrolytic cell **10**. The washing tank **14** is filled with any convenient washing liquid **46** so that the gases gushing out of conduit **22** are thoroughly washed and fed into the drain pipe **26**. Thus, the apparatus may be constructed at reduced cost and without any complexity.

As described earlier, the magnets **32** and **34** provide positive and negative magnetic poles N, S which are confronted in the annular wall for facilitating an alignment between the cross section of the flow-path of the liquid and the annular portion of the magnets **32** and **34** and a generation of a magnetic field in a direction perpendicular to that of the liquid flow, so that the liquid is forced to flow through the magnetic field.

Experimental data	Value
Room temperature	20^0 Centigrade
Atmospheric pressure	1003 millibars
Electrolyte temperature	25^0 Centigrade
Humidity	43%
Voltage	2.8 Volts
Current	30 Amps
Hydroxy gas production rate	116 cc/sec.
Hydrogen production per Coulomb (1A x 1 sec.)	2.6 cc.
Oxygen production per Coulomb	1.3 cc.

The rate of generation shown by these figures is over 20 times that which could be obtained by standard Faraday electrolysis.

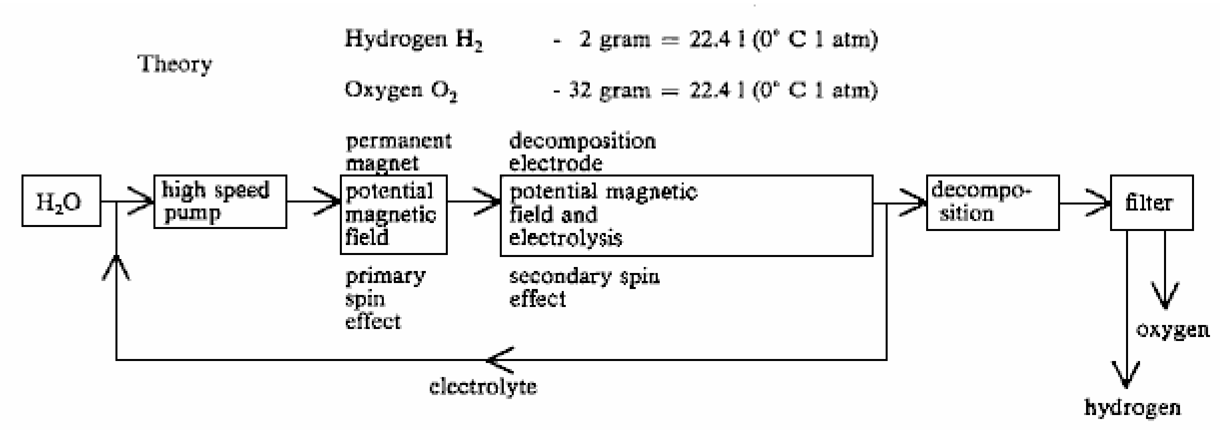

While a preferred embodiment of the invention has been illustrated by way of example in the drawings and particularly described, it will be understood that various modifications may be made in the construction and that the invention is no way limited to the embodiments shown.

STEPHEN CHAMBERS (Xogen Power Inc.)

US Patent 6,126,794 16th July 2002 Inventor: Stephen Chambers

AN APPARATUS FOR PRODUCING ORTHOHYDROGEN AND/OR PARAHYDROGEN

This patent describes an electrolyser system capable of running a small internal combustion engine directly from water alone.

ABSTRACT

An apparatus for producing orthohydrogen and/or parahydrogen. The apparatus includes a container holding water and at least one pair of closely-spaced electrodes arranged within the container and submerged in the water. A first power supply provides a particular first pulsed signal to the electrodes. A coil may also be arranged within the container and submerged in the water if the production of parahydrogen is also required. A second power supply provides a second pulsed signal to the coil through a switch to apply energy to the water. When the second power supply is disconnected from the coil by the switch and only the electrodes receive a pulsed signal, then orthohydrogen can be produced. When the second power supply is connected to the coil and both the electrodes and coil receive pulsed signals, then the first and second pulsed signals can be controlled to produce parahydrogen. The container is self-pressurised and the water within the container requires no chemical catalyst and yet can produce the orthohydrogen and/or parahydrogen efficiently. Heat is not generated, and bubbles do not form on the electrodes.

BACKGROUND OF THE INVENTION

Conventional electrolysis cells are capable of producing hydrogen and oxygen from water. These conventional cells generally include two electrodes arranged within the cell which apply energy to the water to thereby produce hydrogen and oxygen. The two electrodes are conventionally made of two different materials.

However, the hydrogen and oxygen generated in the conventional cells are generally produced in an inefficient manner. That is, a large amount of electrical power has to be applied to the electrodes in order to produce the hydrogen and oxygen. Moreover, a chemical catalyst such as sodium hydroxide or potassium hydroxide must be added to the water to separate hydrogen or oxygen bubbles from the electrodes. Also, the produced gas must often be transported to a pressurised container for storage, because conventional cells produce the gases slowly. Also, conventional cells tend to heat up, creating a variety of problems, including boiling of the water. In addition, conventional cells tend to form gas bubbles on the electrodes which act as electrical insulators and reduce the efficiency of the cell.

Accordingly, it is extremely desirable to produce a large amount of hydrogen and oxygen with only a modest amount of input power. Furthermore, it is desirable to produce the hydrogen and oxygen with "regular" tap water and without any additional chemical catalyst, and to operate the cell without the need for an additional pump to pressurise it. It is also desirable to construct both of the electrodes from the same material. It is also desirable to produce the gases quickly, and without heat, and without bubbles forming on the electrodes.

Orthohydrogen and parahydrogen are two different isomers of hydrogen. Orthohydrogen is that state of hydrogen molecules in which the spins of the two nuclei are parallel. Parahydrogen is that state of hydrogen molecules in which the spins of the two nuclei are antiparallel. The different characteristics of orthohydrogen and parahydrogen lead to different physical properties. For example, orthohydrogen is highly combustible whereas parahydrogen is a slower burning form of hydrogen. Thus, orthohydrogen and parahydrogen can be used for different applications. Conventional electrolytic cells make only orthohydrogen and parahydrogen. Parahydrogen is difficult and expensive to make by conventional means.

Accordingly, it is desirable to produce orthohydrogen and/or parahydrogen cheaply within a cell and to be able to control the amount of either produced by that cell. It is also desirable to direct the produced orthohydrogen or parahydrogen to a coupled machine in order to provide a source of energy for it.

SUMMARY OF THE INVENTION

It is therefore an object of the present invention to provide a cell having electrodes and containing water which produces a large amount of hydrogen and oxygen in a relatively small amount of time, and with a modest amount of input power, and without generating heat.

It is another object of the present invention for the cell to produce bubbles of hydrogen and oxygen which do not bunch around or on the electrodes.

It is also an object of the present invention for the cell to operate properly without a chemical catalyst. Thus, the cell can be run using ordinary tap water. This has the advantage of avoiding the additional costs required for producing the chemical catalyst.

It is another object of the present invention for the cell to be self-pressurising. Thus avoiding the need for an additional pump.

It is another object of the present invention to provide a cell having electrodes made of the same material. This material can, for example, be stainless steel. Thus, the construction of the cell can be simplified and construction costs reduced.

It is another object of the present invention to provide a cell which is capable of producing orthohydrogen, parahydrogen or a mixture thereof and can be set so as to produce any relative amount of orthohydrogen and parahydrogen desired by the user.

It is another object of the invention to couple the gaseous output of the cell to a device, such as an internal combustion engine, so that the device may be powered from the gas supplied to it.

These and other objects, features, and characteristics of the present invention will be more apparent upon consideration of the following detailed description and appended claims with reference to the accompanying drawings, wherein the same reference numbers have been used to indicate corresponding parts in the various figures.

Accordingly, the present invention includes a container for holding water. At least one pair of closely-spaced electrodes are positioned within the container and submerged under the water. A first power supply provides a particular pulsed signal to the electrodes. A coil is also arranged in the container and submerged under the water. A second power supply provides a particular pulsed signal through a switch to the electrodes.

When only the electrodes receive a pulsed signal, then orthohydrogen can be produced. When both the electrodes and coil receive pulsed signals, then parahydrogen or a mixture of parahydrogen and orthohydrogen can be produced. The container is self pressurised and the water within the container requires no chemical catalyst to produce the orthohydrogen and/or parahydrogen efficiently.

BRIEF DESCRIPTION OF THE DRAWINGS

Fig.1 is a side view of a cell for producing orthohydrogen including a pair of electrodes according to a first embodiment of the present invention;

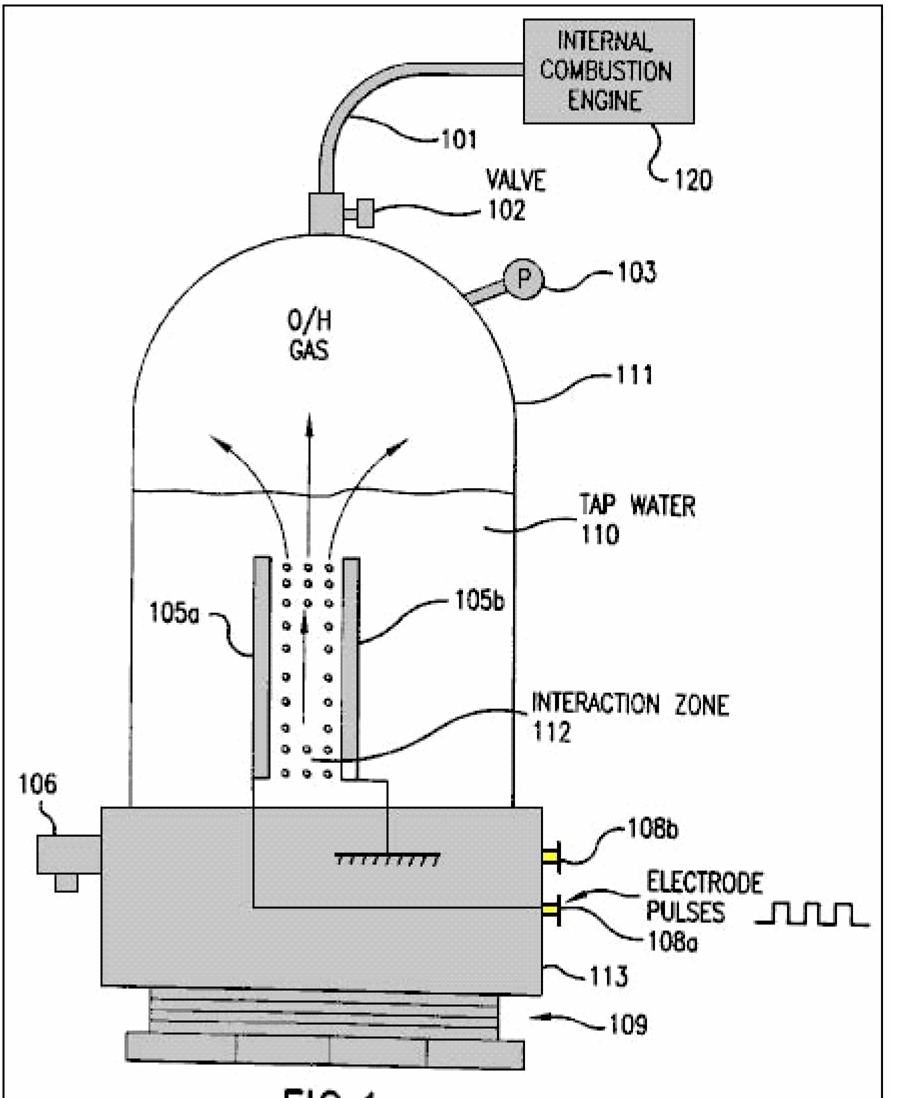

FIG.1

Fig.2 is a side view of a cell for producing orthohydrogen including two pairs of electrodes according to a second embodiment of the present invention;

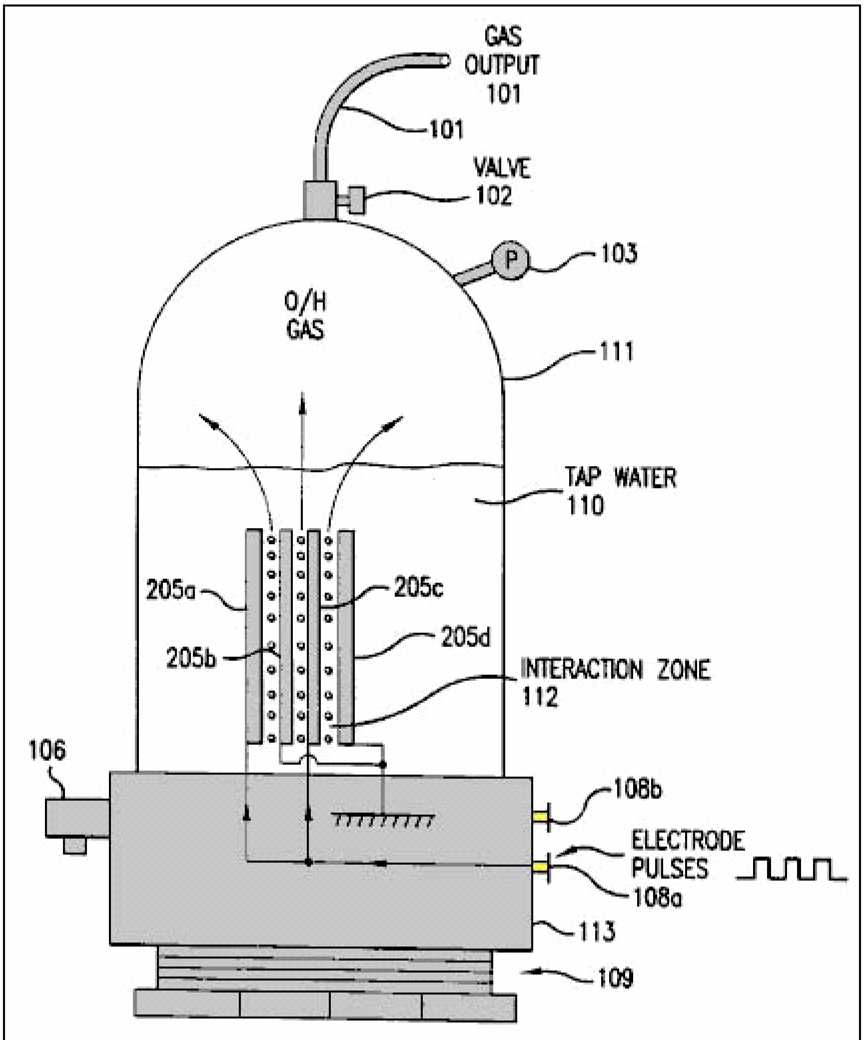

FIG.2

Fig.3 is a side view of a cell for producing orthohydrogen including a pair of cylindrical-shaped electrodes according to a third embodiment of the present invention;

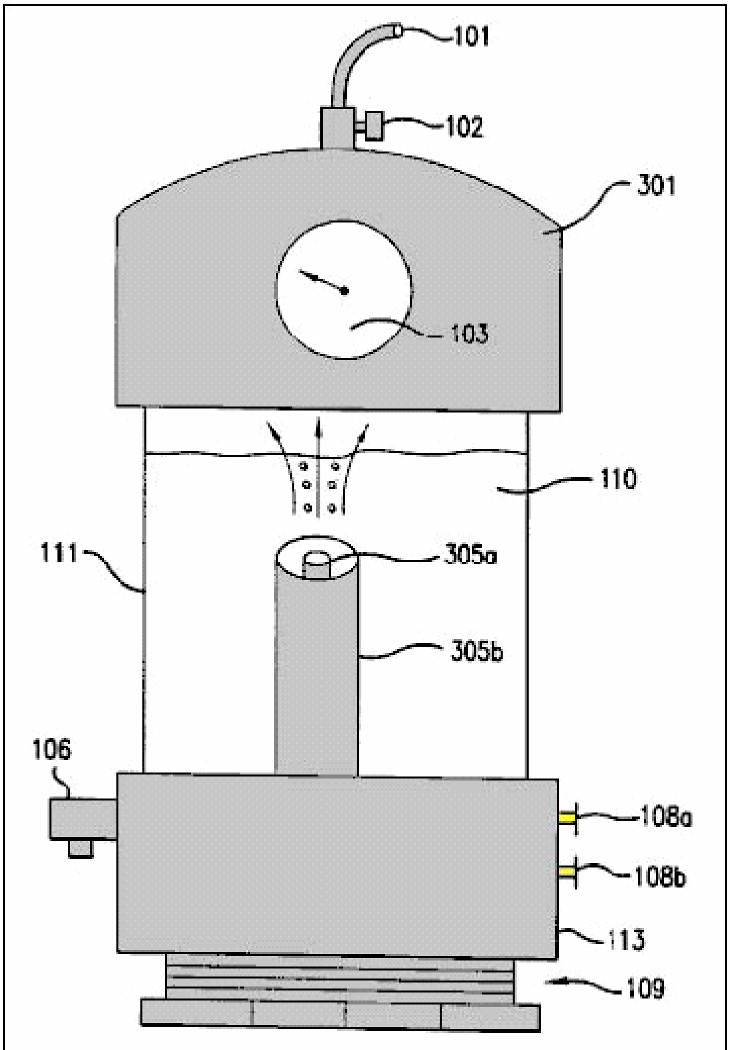

FIG.3

Fig.4a is a diagram illustrating a square wave pulsed signal which can be produced by the circuit of **Fig.5** and applied to the electrodes of **Fig.1** through **Fig.3**;

Fig.4b is a diagram illustrating a saw tooth wave pulsed signal which can be produced by the circuit of **Fig.5** and applied to the electrodes of **Fig.1** through **Fig.3**;

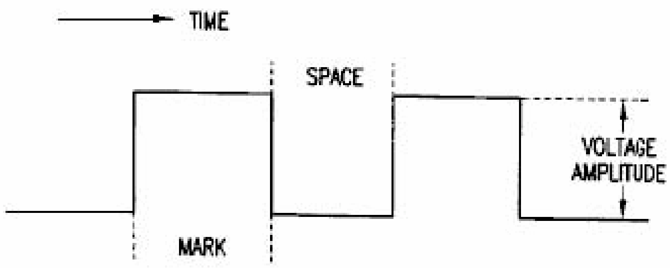

SQUARE WAVE WITH 1:1 MARK-SPACE RATIO

FIG. 4a

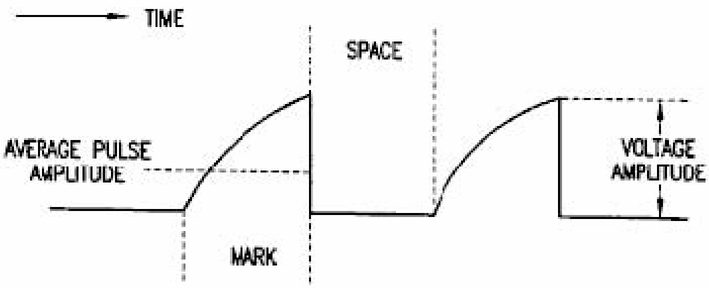

SAWTOOTH WAVE WITH 1:1 MARK SPACE RATIO
A SAWTOOTH WAVE WILL ONLY REACH PEAK VOLTAGE
AT THE END OF THE PULSE DURATION

FIG. 4b

Fig.4c is a diagram illustrating a triangular wave pulsed signal which can be produced by the circuit of **Fig.5** and applied to the electrodes of **Fig.1** through **Fig.3**;

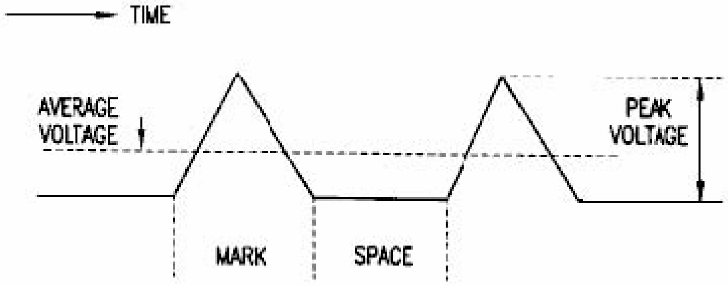

TRIANGULAR WAVE WITH 1:1 MARK SPACE RATIO
A TRIANGULAR WAVE HAS A LOW PEAK VOLTAGE

FIG. 4c

Fig.5 is an electronic circuit diagram illustrating a power supply which is connected to the electrodes of **Fig.1** through **Fig.3**;

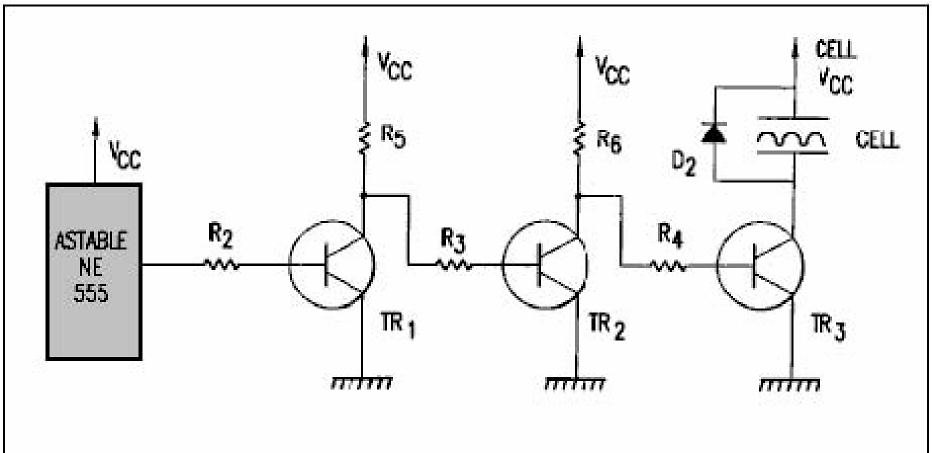

FIG.5

Fig.6 is a side view of a cell for producing at least parahydrogen including a coil and a pair of electrodes according to a fourth embodiment of the present invention;

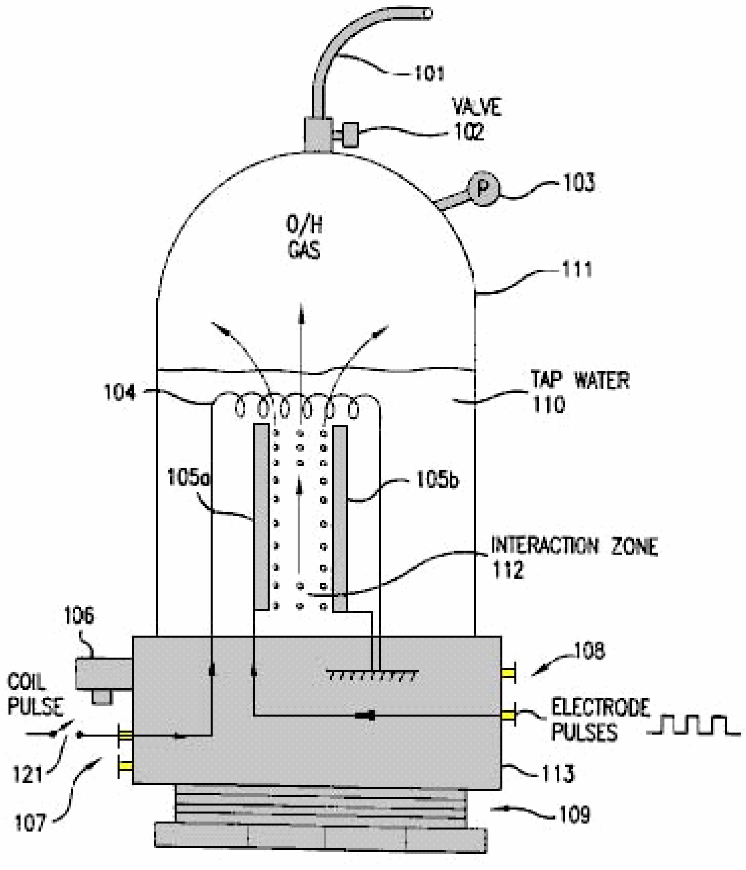

FIG.6

Fig.7 is a side view of a cell for producing at least parahydrogen including a coil and two pairs of electrodes according to a fifth embodiment of the present invention;

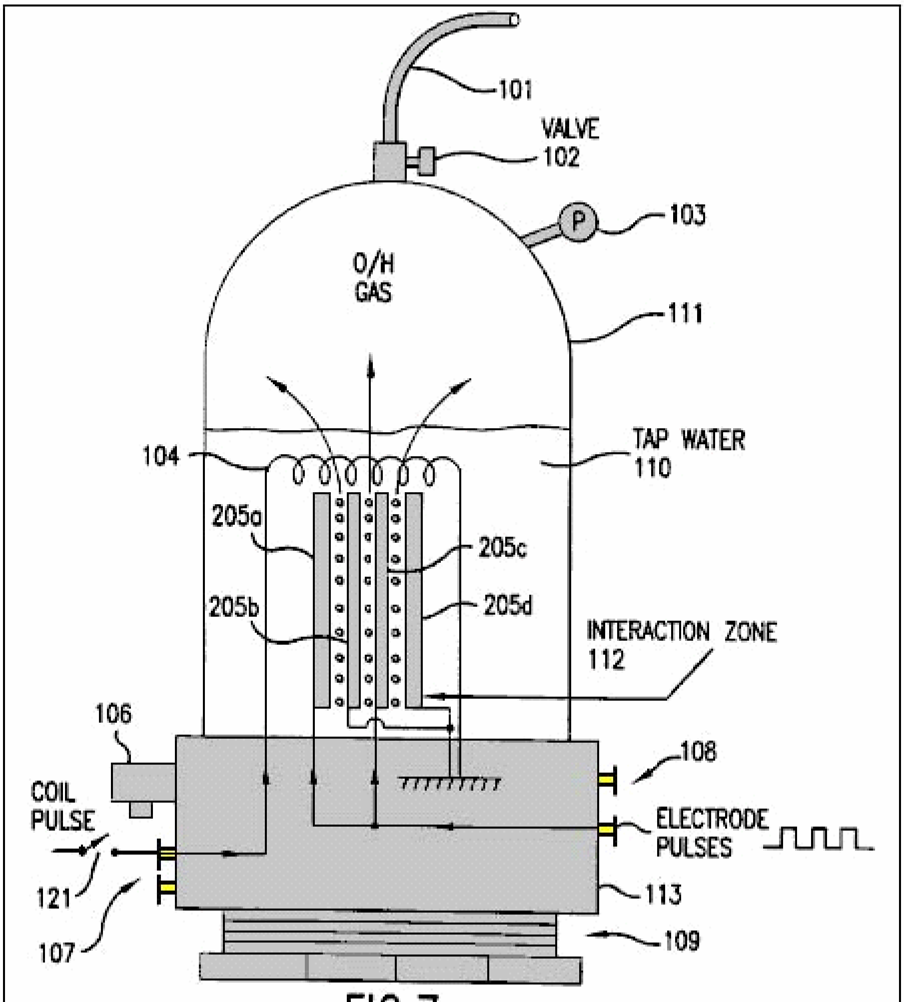

FIG.7

Fig.8 is a side view of a cell for producing at least parahydrogen including a coil and a pair of cylindrical-shaped electrodes according to a sixth embodiment of the present invention; and

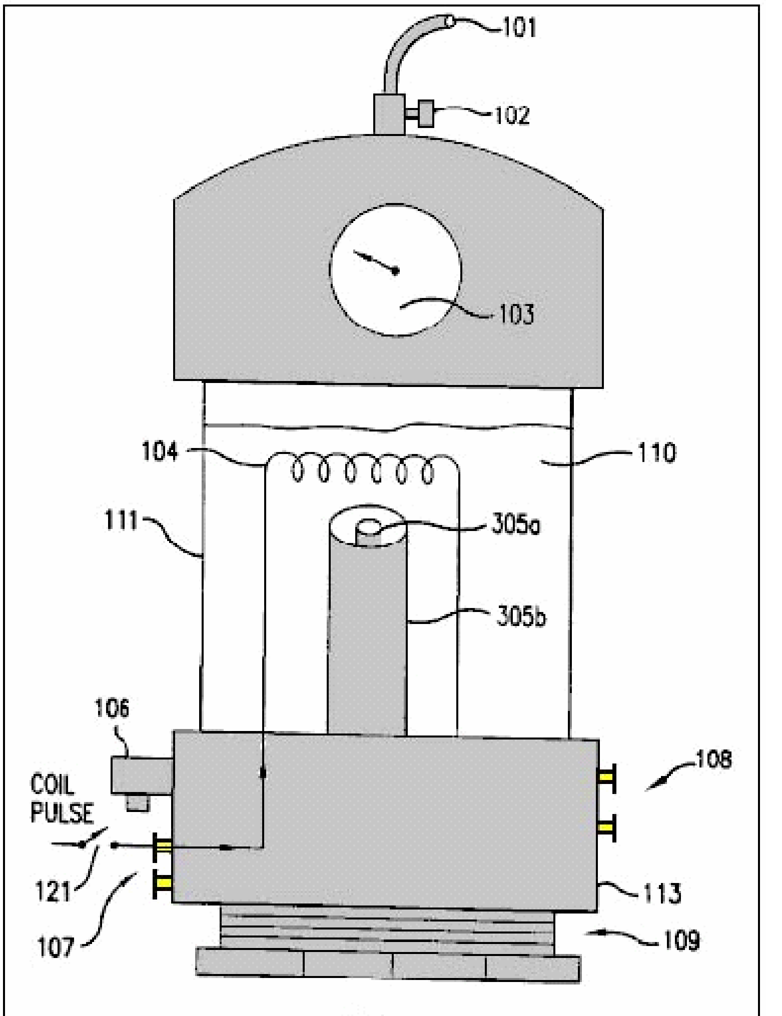

FIG.8

Fig.9 is as electronic circuit diagram illustrating a power supply which is connected to the coil and electrodes of **Fig.6** through **Fig.8**.

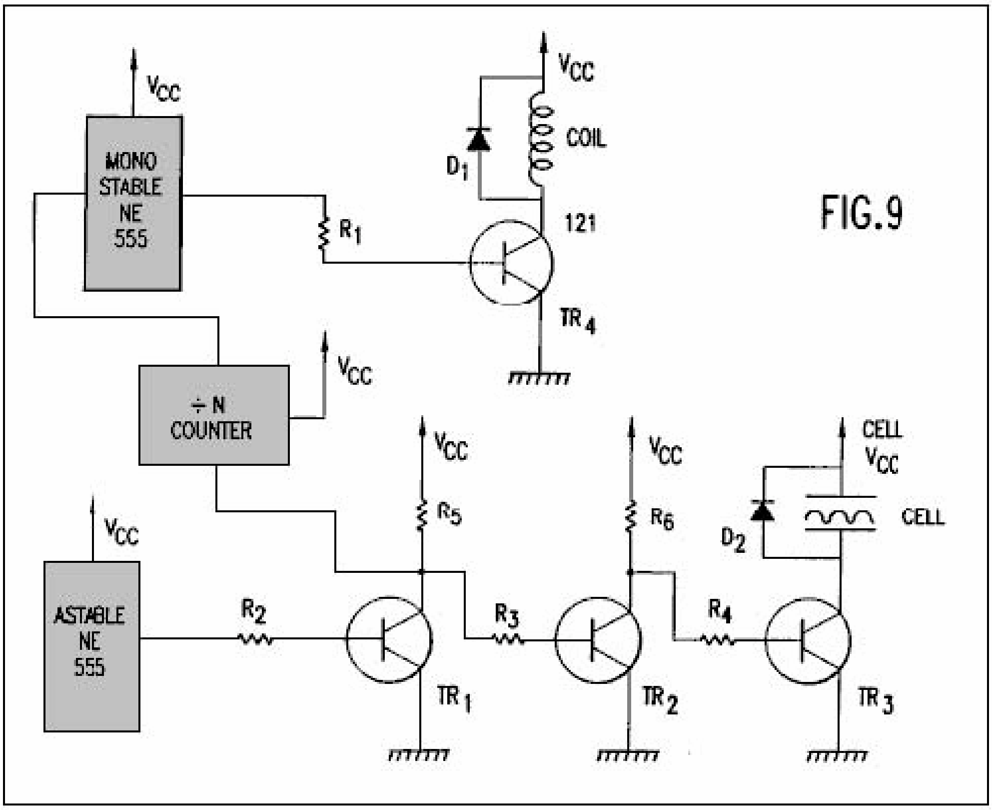

DETAILED DESCRIPTION OF THE PREFERRED EMBODIMENT

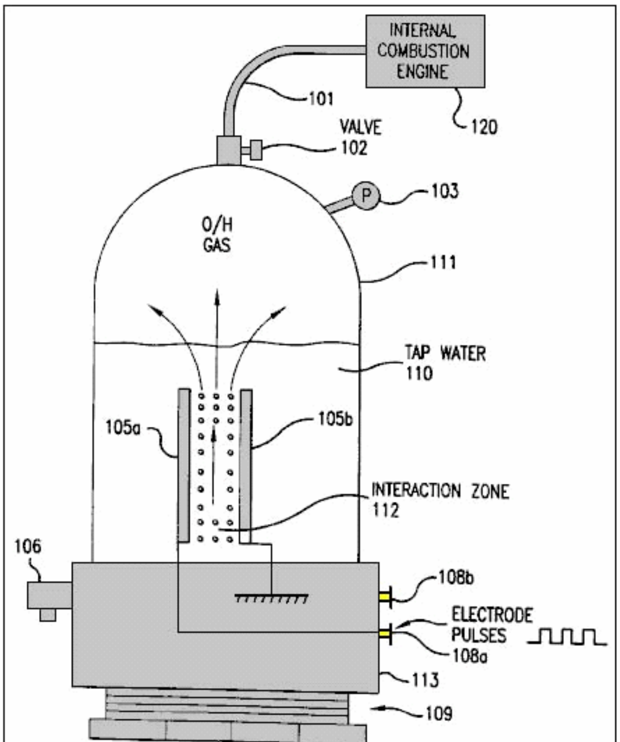

FIG.1

Fig.1 shows a first embodiment of the present invention including a cell for producing hydrogen and oxygen. As will be discussed below in conjunction with **Figs.6-8**, the production of parahydrogen requires an additional coil not shown in **Fig.1**. Thus, the hydrogen produced by the first embodiment of **Fig.1** is orthohydrogen.

The cell includes a closed container **111** which is closed at its bottom portion by threaded plastic base **113** and screw thread base **109**. The container **111** can be made of, for example, Plexiglas and might have a height of 430 mm and a width of 90 mm. The container **111** holds tap water **110**.

The cell also includes a pressure gauge **103** to measure the pressure within the container **111**. An outlet valve **102** is connected to the top of the container **111** to permit any gas within the container to escape into an output tube **101**.

The cell also includes an over-pressure valve **106** connected to a base **113**. The valve **106** provides a safety function by automatically releasing the pressure within the container **111** if the pressure exceeds a predetermined threshold. For example, the valve **106** may be set so that it will open if the pressure in the container exceeds 75 p.s.i. Since the container **111** is built to withstand a pressure of about 200 p.s.i., the cell is provided with a large safety margin.

A pair of electrodes **105a** and **105b** are arranged within the container **111**. These electrodes are submerged under the top level of the water **110** and define an interaction zone **112** between them. The electrodes are preferably made from the same material, such as stainless steel.

In order to produce an optimum amount of hydrogen and oxygen, an equal spacing between the electrodes **105a** and **105b** must be maintained. Moreover, it is preferable to minimise the spacing between the electrodes. However, the electrodes cannot be positioned excessively close together, because arcing between the electrodes would occur. It has been determined that a spacing of 1 mm is the optimum spacing for producing hydrogen and oxygen. Spacing up to 5 mm can work effectively, but spacing above 5 mm has not worked well, except with excessive power.

Hydrogen and oxygen gas may be output through tube **101** to a device **120** which can use those gases, for example an internal combustion engine, such as shown in **Fig.1**. Instead of an internal combustion engine, device **120** may be any device using hydrogen and oxygen, including a reciprocating piston engine, a gas turbine engine, a stove, a heater, a furnace, a distillation unit, a water purification unit, a hydrogen/oxygen jet, or other device using the gases. With an adequately productive example of the present invention, any such device **120** using the output gases can be run continuously without the need for storing dangerous hydrogen and oxygen gases.

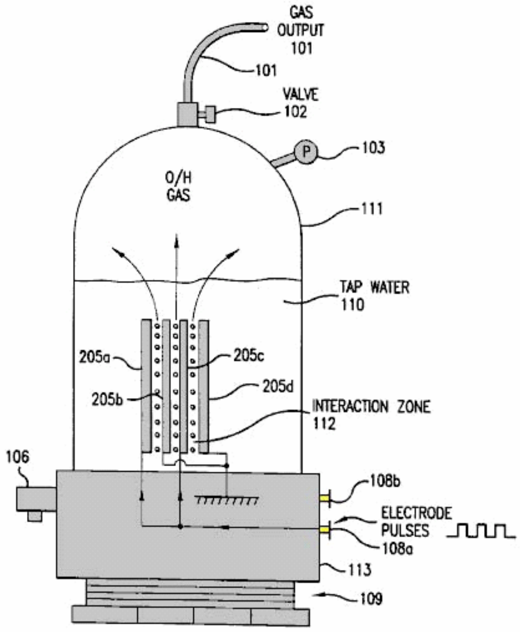

FIG.2

Fig.2 shows a second embodiment of the present invention which includes more than one pair of electrodes **205a-d**. The spacing between the electrodes is less than 5 mm as in the embodiment of **Fig.1**. While **Fig.2** shows only one additional pair of electrodes, it is possible to include many more pairs (e.g., as many as 40 pairs of electrodes) within the cell. The rest of the cell illustrated in **Fig.2** remains the same as that illustrated in **Fig.1**. The multiple electrodes are preferably flat plates closely spaced, parallel to each other.

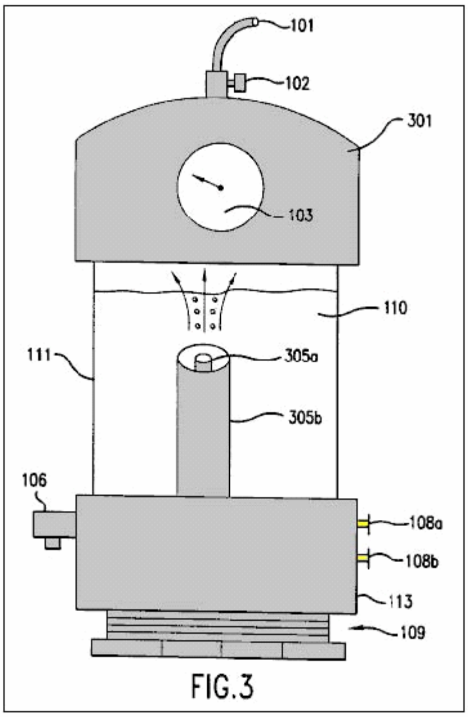

FIG.3

Fig.3 illustrates a cell having a cylindrically shaped electrodes **305a** and **305b**. The outer electrode **305b** surrounds the coaxially aligned inner electrode **305a**. The equal spacing of the electrodes **305a** and **305b** is less than 5 mm and the interactive zone is coaxially arranged between the two electrodes. While **Fig.3** illustrates the top portion of the container **111** being formed by a plastic cap **301**, it will be appreciated by those skilled in the art, that the cap **301** may be used in the embodiments of **Fig.1** and **Fig.2** and the embodiment of **Fig.3** can utilise the same container **111** illustrated in **Figs.1-2**. As suggested by **Fig.3**, the electrodes can be almost any shape such as flat plates, rods, tubes or coaxial cylinders.

The electrodes **105a** and **105b** of **Fig.1** (or electrodes **205a-d** of **Fig.2** or electrodes **305a** and **305b** of **Fig.3**) are respectively connected to power supply terminals **108a** and **108b** so that they can receive a pulsed electrical signal from a power supply. The pulsed signal can be almost any waveform and have a variable current level, voltage level, frequency and mark-space ratio (i.e., a ratio of the duration of a single pulse to the interval between two successive pulses). For example, the power supply providing power to the electrodes can be a mains 110 volts to a 12 volt supply or a car battery.

Fig.4a, **Fig.4b** and **Fig.4c** illustrate a square wave, a saw tooth wave and a triangular wave, respectively which can be applied to the electrodes **105a** and **105b** (or **205a-d** or **305a**, **305b**) in accordance with the present invention. Each of the waveforms illustrated in **Figs.4a-4c** has a 1:1 mark-space ratio. As shown in **Fig.4b**, the saw tooth wave will only reach a peak voltage at the end of the pulse duration. As shown in **Fig.4c**, the triangular wave has a low peak voltage. It has been found that optimal results for producing hydrogen and oxygen in the present invention are obtained using a square wave.

After initiation of the pulsed signal from the power supply, the electrodes **105a** and **105b** continuously and almost instantaneously generate hydrogen and oxygen bubbles from the water **110** in the interaction zone **112**. Moreover, the bubbles can be generated with only minimal heating of the water or any other part of the cell. These bubbles rise through the water and collect in the upper portion of the container **111**.

The generated bubbles are not bunched around or on the electrodes **105a** and **105b** and thus readily float to the surface of the water. Therefore, there is no need to add a chemical catalyst to assist the conduction of the solution or reduce the bubble bunching around or on the electrodes. Thus, only tap water is needed for generation of the hydrogen and oxygen in the present invention.

The gases produced within the container are self-pressurising (i.e., pressure builds in the container by the production of gas, without an air pump). Thus, no additional pump is needed to be coupled to the container **111** and the produced gases do no need to be transported into a pressurised container.

The power supply in the present invention is required to provide a pulsed signal having only 12 volts at 300 mA (3.6 watts). It has been found that an optimal amount of hydrogen and oxygen has been produced when the pulsed signal has mark-space ratio of 10:1 and a frequency of 10-250 KHz. Using these parameters, the prototype cell of the present invention is capable of producing gas at the rate of 1 p.s.i. per minute. Accordingly, the cell of the present invention is capable of producing hydrogen and oxygen in a highly efficient manner, quickly and with low power requirements.

As noted above, the hydrogen produced by the embodiments of **Figs.1-3** is orthohydrogen. As is well understood by those skilled in the art, orthohydrogen is highly combustible. Therefore, any orthohydrogen produced can be transported from the container **111** through valve **102** and outlet tube **101** to be used by a device such as an internal combustion engine.

The present invention, with sufficient electrodes, can generate hydrogen and oxygen fast enough to feed the gases directly into an internal combustion engine or turbine engine, and run the engine continuously without accumulation and storage of the gases. Hence, this provides for the first time a hydrogen/oxygen driven engine that is safe because it requires no storage of hydrogen or oxygen gas.

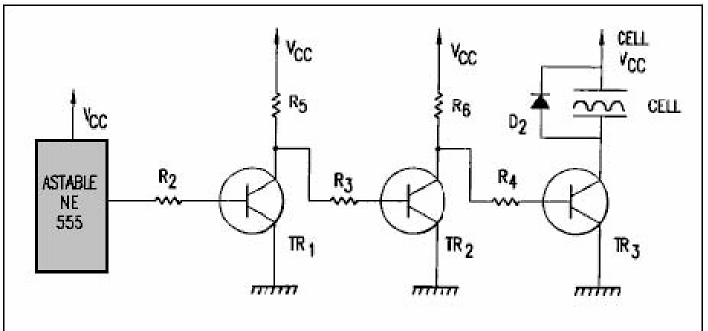

FIG.5

Fig.5 illustrates an exemplary power supply for providing D.C. pulsed signals such as those illustrated in **Figs.4a-4c** to the electrodes illustrated in **Figs.1-3**. As will be readily understood by those skilled in the art, any other power supply which is capable of providing the pulsed signals discussed above can be substituted.
The power supply illustrated in **Fig.5** includes the following parts, components and values:

The astable circuit is connected to the base of transistor **TR1** through resistor **R2**. The collector of transistor **TR1** is connected to voltage supply **Vcc** through resistor **R5** and the base of transistor **TR2** through resistor **R3**. The collector of transistor **TR2** is connected to voltage supply **Vcc** through resistor **R6** and the base of transistor **TR3** through resistor **R4**. The collector of transistor **TR3** is connect to one of the electrodes of the cell and diode **D2**. The emitters of transistors **TR1, TR2** and **TR3** are connected to ground. Resistors **R5** and **R6** serve as collector loads for transistors **TR1** and **TR2**, respectively. The cell serves as the collector load for transistor **TR3**. Resistors **R2, R3** and **R4** ensure that transistors **TR1**, **TR2** and **TR3** are saturated. Diode **D2** protects the rest of the circuit from any induced back emf within the cell.

The astable circuit is used to generate a pulse train at a specific time and with a specific mark-space ratio. This pulse train is provided to the base of transistor **TR1** through resistor **R2**. Transistor **TR1** operates as an invert switch. Thus, when the a stable circuit produces an output pulse, the base voltage of the transistor **TR1** goes high (i.e. close to **Vcc** or logic 1). Hence, the voltage level of the collector of transistor **TR1** goes low (i.e., close to ground or logic 0).

Transistor **TR2** also operates as an inverter. When the collector voltage of transistor **TR1** goes low, the base voltage of transistor **TR2** also goes low and transistor **TR2** turns off. Hence, the collector voltage of transistor **TR2** and the base voltage of Transistor **TR3** go high. Therefore, transistor **TR3** turns on with the same mark-space ratio as the astable circuit. When the transistor **TR3** is on, one electrode of the cell is connected to **Vcc** and the other is connected to ground through transistor **TR3**. Thus, the transistor **TR3** can be turned on (and off) and therefore the transistor **TR3** effectively serves as a power switch for the electrodes of the cell.

Figs.6-8 illustrate additional embodiments of the cell which are similar to the embodiments of **Figs.1-3**, respectively. However, each of embodiments of **Figs.6-8** further includes a coil **104** arranged above the electrodes and power supply terminals **107** connected to the coil **104**. The dimensions of coil **104** can be, for example, 5 x 7 cm and have, for example, 1500 turns. The coil **104** is submerged under the surface of the water **110**.

The embodiments of **Figs.6-8** further include an optional switch **121** which can be switched on or off by the user. When the switch **121** is not closed, then the cell forms basically the same structure as **Figs.1-3** and thus can be operated in the same manner described in **Figs.1-3** to produce orthohydrogen and oxygen. When the switch **121** is closed, the additional coil **104** makes the cell capable of producing oxygen and either (1) parahydrogen or (2) a mixture of parahydrogen and orthohydrogen.

When the switch **121** is closed (or not included), the coil **104** is connected through terminals **106** and the switch **121** (or directly connected only through terminals **106**) to a power supply so that the coil **104** can a receive a pulsed signal. As will be discussed below, this power supply can be formed by the circuit illustrated in **Fig.9**.

When the coil **104** and the electrodes **105a** and **105b** receive pulses, it is possible to produce bubbles of parahydrogen or a mixture of parahydrogen and orthohydrogen. The bubbles are formed and float to the surface of the water **110** as discussed in **Figs.1-3**. When the coil is pulsed with a higher current, a greater amount of parahydrogen is produced. Moreover, by varying the voltage of the coil **104**, a greater/lesser percentage of orthohydrogen/parahydrogen can be produced. Thus, by controlling the voltage level, current level and frequency (discussed below) provided to the coil **104** (and the parameters such as voltage level, current level, frequency, mark-space ratio and waveform provided to the electrodes **105a** and **105b** as discussed above) the composition of the gas produced by the cell can be controlled. For example, it is possible to produce only oxygen and orthohydrogen by simply disconnecting the coil **104**. It is also possible to produce only oxygen and parahydrogen by providing the appropriate pulsed signals to the coil **104** and the electrodes **105a** and **105b**. All of the benefits and results discussed in connection with the embodiments of **Figs.1-3** are equally derived from the embodiments of **Figs.6-8**. For example, the cells of **Figs.6-8** are self-pressurising, require no-chemical catalyst, do not greatly heat the water **110** or cell, and produce a large amount of hydrogen and oxygen gases from a modest amount of input power, without bubbles on the electrodes.

A considerable amount of time must pass before the next pulse provides current to the coil **104**. Hence, the frequency of the pulsed signal is much lower than that provided to the electrodes **105a** and **105b**. Accordingly, with the type of coil **104** having the dimensions described above, the frequency of pulsed signals can be as high as 30 Hz, but is preferably 17-22 Hz to obtain optimum results.

Parahydrogen is not as highly combustible as orthohydrogen and hence is a slower burning form of hydrogen. Thus, if parahydrogen is produced by the cell, the parahydrogen can be coupled to a suitable device such as a cooker or a furnace to provide a source of power or heat with a slower flame.

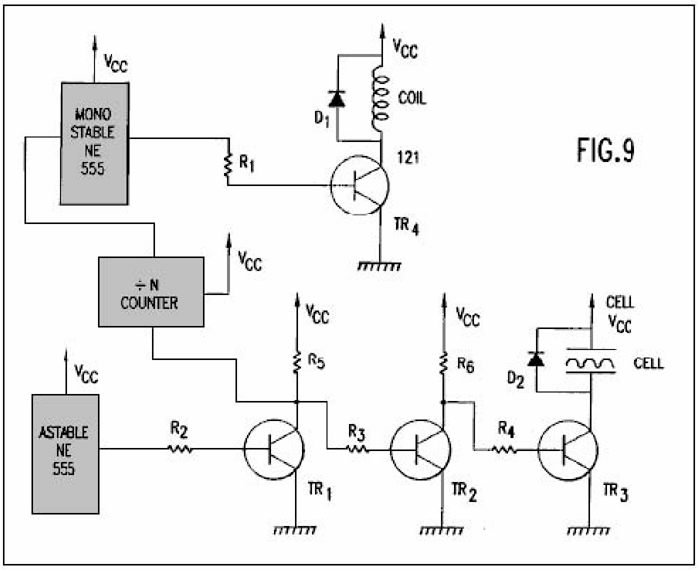
FIG.9

Fig.9 illustrates an exemplary power supply for providing D.C. pulsed signals such as those illustrated in **Figs.4a-4c** to the electrodes illustrated in **Figs.6-8**. Additionally, the power supply can provide another pulsed signal to the coil. As will be readily understood by those skilled in the art, any other power supply which is capable of providing the pulsed signals discussed above to the electrodes of the cell and the coil can be substituted. Alternatively, the pulsed signals provided to the electrodes and the coil can be provided by two separate power supplies.

The portion of the power supply (astable circuit, **R2-R6**, **TR1-TR3**, **D2**) providing a pulsed signal to the electrodes of the cell is identical to that illustrated in **Fig.5**. The power supply illustrated in **Fig.9** further includes the following parts and their respective exemplary values:

The input of the ‘divide-by-N’ counter (hereinafter "the divider") is connected to the collector of transistor **TR1**. The output of the divider is connected to the monostable circuit and the output of the monostable circuit is connected to the base of transistor **TR4** through resistor **R1**. The collector of transistor **TR4** is connected to one end of the coil and a diode **D1**. The other end of the coil and the diode **D1** are connected to the voltage supply

Vcc. Resistor **R1** ensures that **TR4** is fully saturated. Diode **D2** prevents any induced back emf generated within the coil from damaging the rest of the circuit. As illustrated in **Figs.6-8**, a switch **121** can also incorporated into the circuit to allow the user to switch between (1) a cell which produces orthohydrogen and oxygen, and (2) a cell which produces at least parahydrogen and oxygen.

The high/low switching of the collector voltage of transistor **TR1** provides a pulsed signal to the divider. The divider divides this pulsed signal by N (where N is a positive integer) to produce a pulsed output signal. This output signal is used to trigger the monostable circuit. The monostable circuit restores the pulse length so that it has a suitable timing. The output signal from the monostable circuit is connected to the base of transistor **TR4** through resistor **R1** to switch transistor **TR4** on/off. When transistor **TR4** is switched on, the coil is placed between **Vcc** and ground. When the transistor **TR4** is switched off, the coil is disconnected from the rest of the circuit. As discussed in conjunction with **Figs.6-8**, the frequency of pulse signal provided to the coil is switched at a rate preferably between 17-22 Hz; i.e., much lower than the frequency of the pulsed signal provided to the electrodes.

As indicated above, it is not required that the circuit (divider, monostable circuit, **R1, TR4** and **D1**) providing the pulsed signal to the coil be connected to the circuit (astable circuit, **R2-R6**, **TR1-TR3, D2**) providing the pulsed signal to the electrodes. However, connecting the circuits in this manner provides an easy way to initiate the pulsed signal to the coil.

A working prototype of the present invention has been successfully built and operated with the exemplary and optimal parameters indicated above to generate orthohydrogen, parahydrogen and oxygen from water. The output gas from the prototype has been connected by a tube to the manifold inlet of a small one cylinder gasoline engine, with the carburettor removed, and has thus successfully run such engine without any gasoline:

CHARLES GARRETT

US Patent 2,006,676 2nd July 1935 Inventor: Charles H. Garrett

ELECTROLYTIC CARBURETTOR

Please note that this is a re-worded excerpt from this patent. It describes an electrolyser which Charles claimed was able to generate enough gas from hydrolysis of water, to be able to run a car engine without the use of any other fuel. It should be remembered that in Garrett's day, car electrics were all 6-volt systems.

DESCRIPTION

This invention relates to carburettors and it has particular reference to an electrolytic carburettor by means of which water may be broken up into its hydrogen and oxygen constituents and the gases so formed suitably mixed with each other and with air.

Another object of the invention is to provide a means whereby the electrolyte level in the carburettor may be maintained at a more or less constant level regardless of fluctuations in water pressure at the water inlet of the carburettor.

Another object of the invention is to provide a means whereby the relative amount of air mixed with the hydrogen and oxygen may be regulated as desired.

Still another object of the invention is the provision of a means to prevent the loss of hydrogen and oxygen gases during periods in which these gases are not being drawn from the carburettor.

Still another object of the invention is the provision of a means whereby the hydrogen and oxygen resulting from electrolysis may be formed in separate compartments, and a further object of the invention is the provision of a means to periodically reverse the direction of current flow and thereby alternate the evolution of the gases in the separate compartments, to be intermingled at a later time.

With reference to the accompanying drawings: -

Figure 1 is a view in vertical section of one form of carburettor.

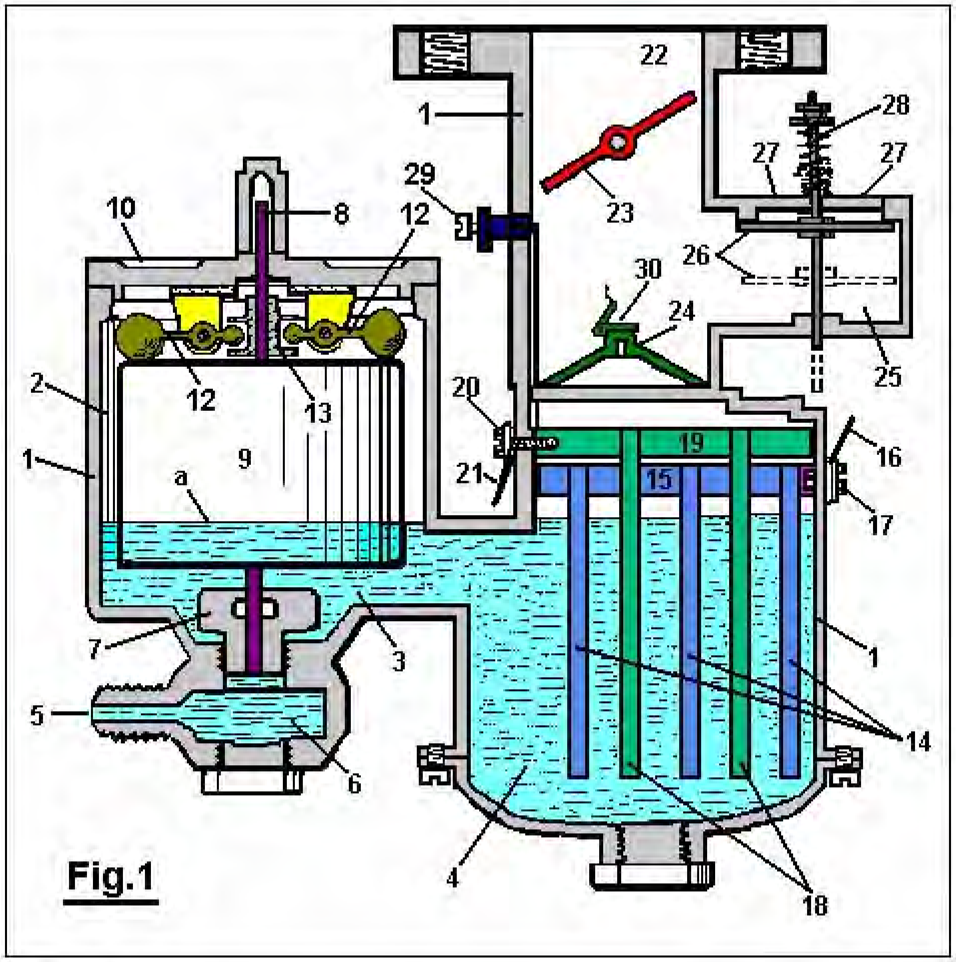

Fig.1

Figure 2 is a modified form.

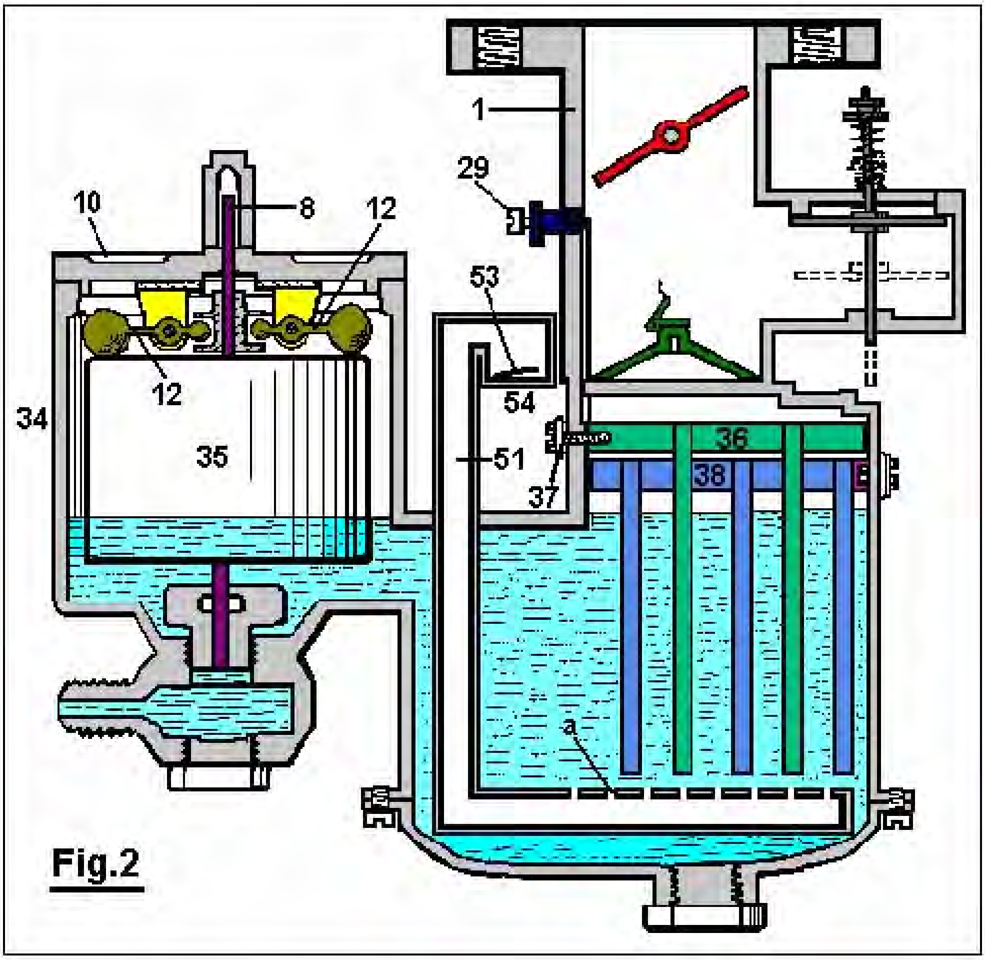

Fig.2

Figure 3 is a diagrammatic view of a pole changer, showing its actuating mechanism, and

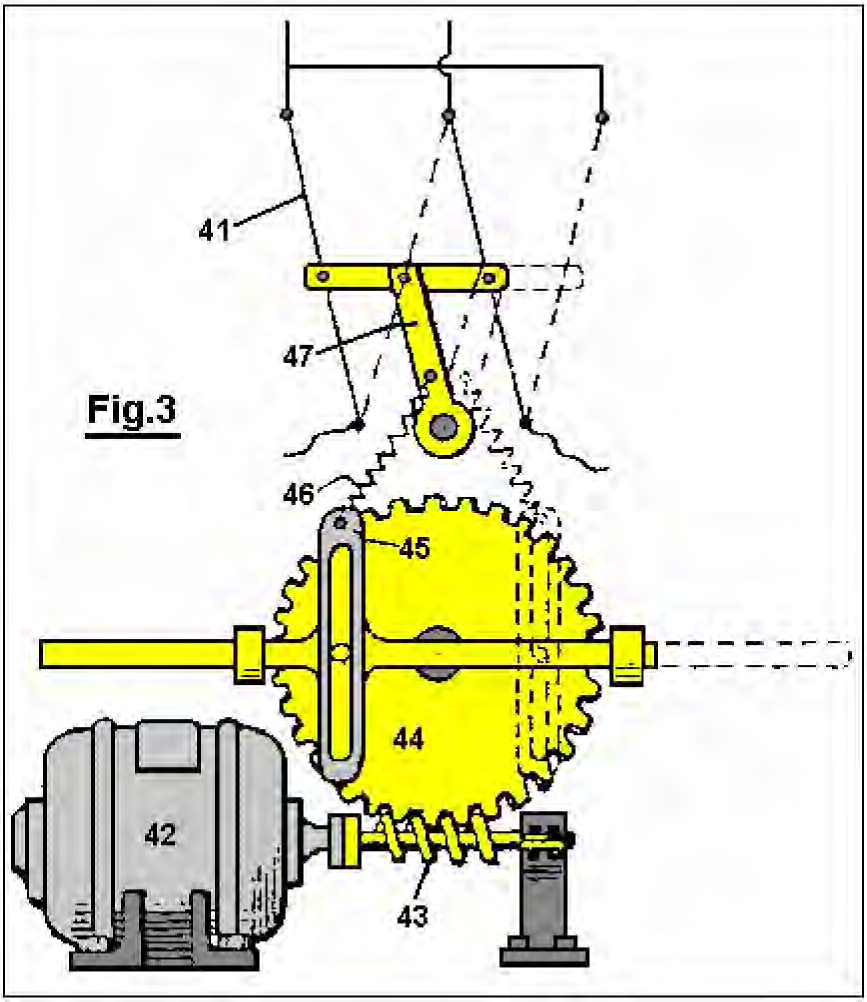

Fig.3

Figure 4 is a wiring diagram for the modified form of carburettor shown in Figure 2.

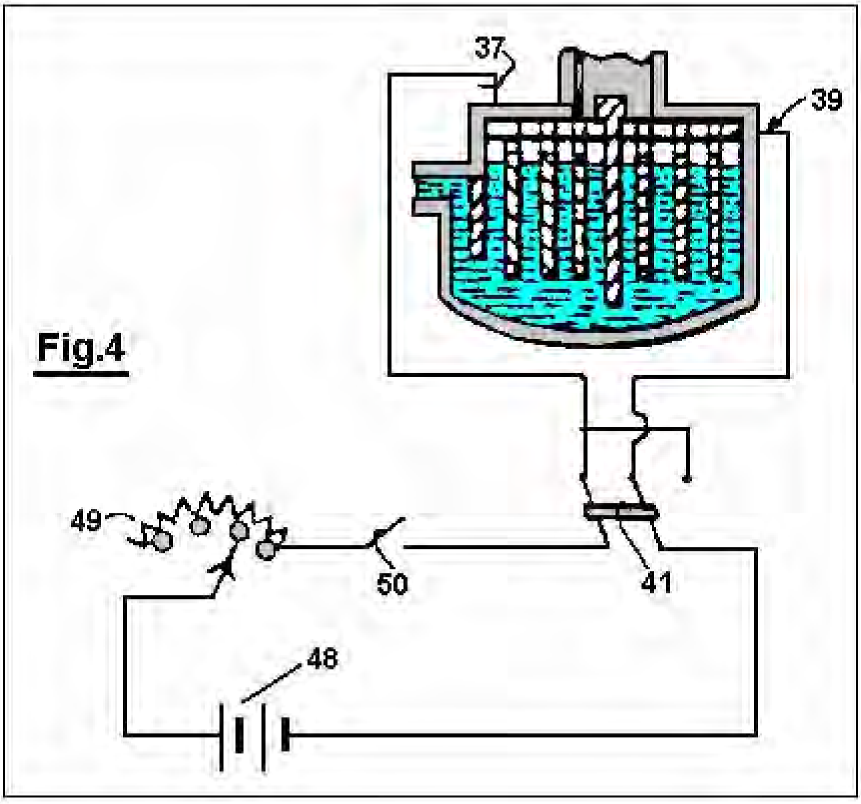

With reference to **Fig.1**: The reference numeral **1** designates the carburettor housing, which is preferably constructed of bakelite or other suitable insulating material. This housing is designed so as to divide the carburettor into a float chamber **2** and gas generating chamber **4**, connected by a fluid passage **3**.

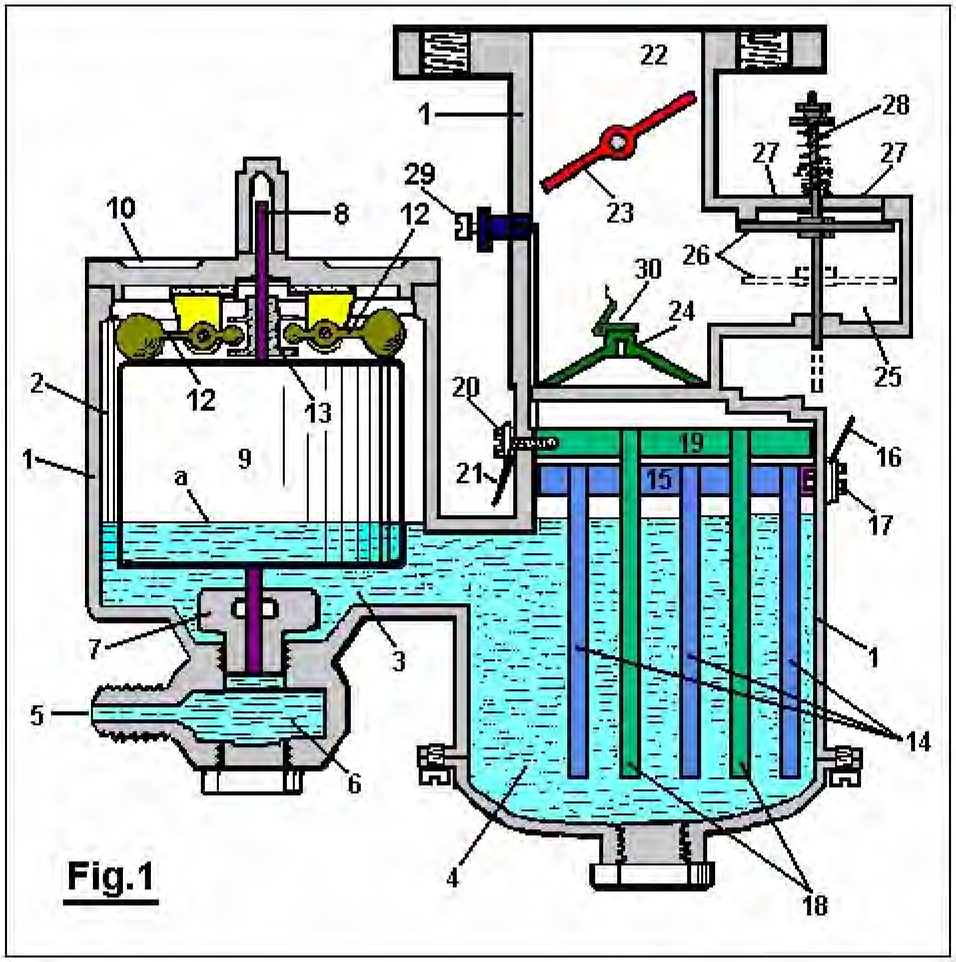

Water under pressure is forced into the carburettor through an opening **5** which communicates with the float chamber **2** through the medium of the sediment chamber **6** and the needle valve orifice **7**, which is closed by a needle valve **8** when the device is not in operation. A float **9** surrounds the needle valve **8** and is free to move vertically relative thereto. Descending from the cover **10** to the float chamber **2** are two ears **11**, located at spaced intervals on opposite sides of the needle valve **8**. The members **12** are pivoted to the ears **11**, as shown. The weighted outer ends of the members **12** rest on top of the float **9**, and their inner ends are received in an annular groove in the collar **13** which is rigidly attached to the needle valve **8**.

Within the gas generating chamber **4**, a series of spaced, descending plates **14** are suspended from a horizontal member **15** to which a wire **16** has electrical contact through the medium of the bolt **17**, which extends inwards through housing **1** and is threaded into the horizontal member **15**.

A second series of plates **18** is located between the plates **14** and attached to the horizontal member **19**, and has electrical contact with the wire **20** through the bolt **21**.

A gas passageway **22**, in which a butterfly valve **23** is located, communicates with the gas generating chamber **4** through an orifice **24**. An air inlet chamber **25** has communication with the gas passageway **22** above the orifice **24**. A check valve **26** which opens downwards, controls the openings **27**, and is held closed and inoperative by means of light spring **28**.

An adjustable auxiliary air valve **29** is provided in the wall of the gas passageway **22**, which air valve is closed by the butterfly valve **23** when the butterfly valve is closed, but communicates with the outside air when the butterfly valve is open.

The operation of the device is as follows :

The chambers **2** and **4** are first filled to the level **'a'** with a solution of weak sulphuric acid (or other electrolyte not changed by the passage of current through it), and the opening **5** is connected to a tank of water (not shown).

The wire **16** is next connected to the positive pole of a storage battery or other source of direct current and the wire **20** to the negative pole. Since the solution within the carburettor is a conductor of electricity, current will flow through it and hydrogen will be given off from the negative or cathode plates **18** and oxygen from the positive or anode plates **14**.

The butterfly valve **23** is opened and the gas passageway **22** brought into communication with a partial vacuum. Atmospheric pressure acting on the top of the check valve **26** causes it to be forced downwards as shown in dotted lines. The hydrogen and oxygen liberated from the water at the plates **18** and **14** are drawn upwards through the orifice **24** covered by the check valve **30** where they are mixed with air entering through the openings **27** and through the auxiliary air valve **29**.

When it is desired to reduce the flow of hydrogen and oxygen from the plates **18** and **14**, the current flowing through the device is reduced, and when the current is interrupted the flow ceases. When the butterfly valve **23** is moved to its ‘closed’ position, the check-valve **26** is automatically closed by the spring **28**. Any excess given off during these operations is stored in the space above the fluid where it is ready for subsequent use.

Water is converted into its gaseous constituents by the device herein described, but the dilute sulphuric acid or other suitable electrolyte in the carburettor remains unchanged, since it is not destroyed by electrolysis, and the parts in contact therewith are made of bakelite and lead or other material not attacked by the electrolyte.

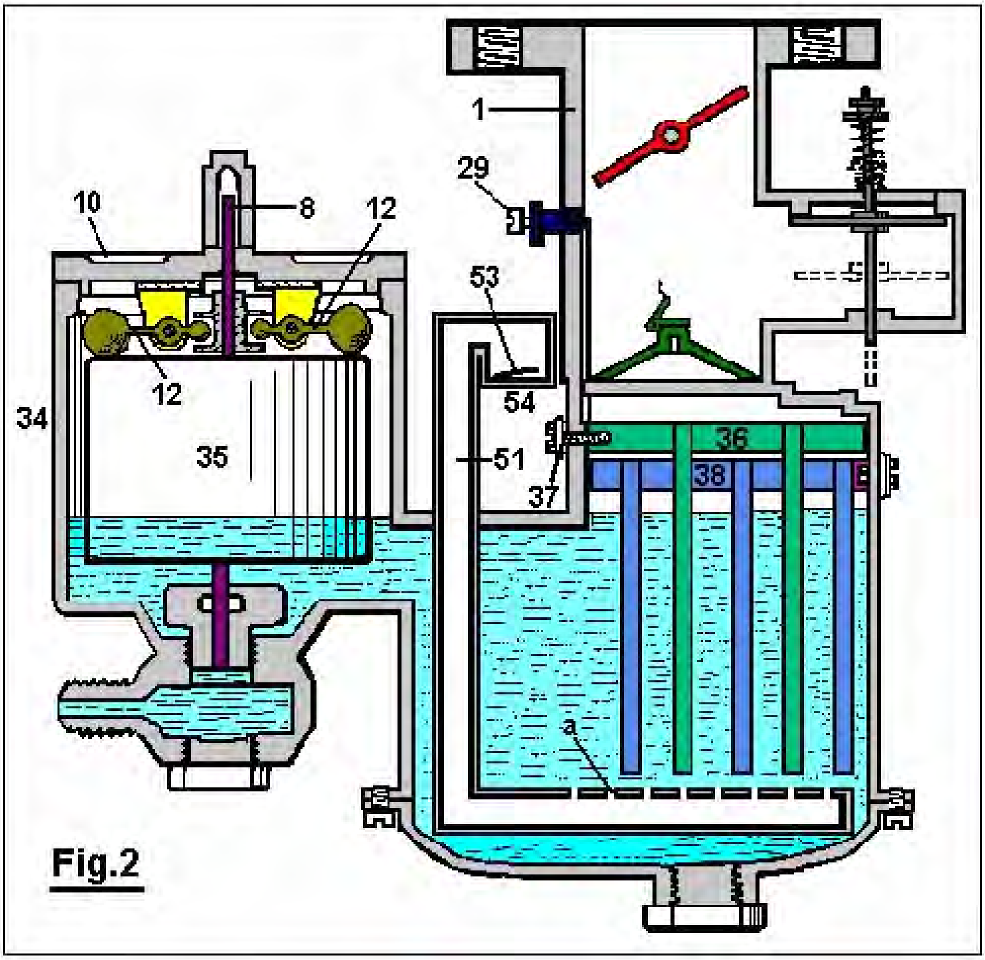

Fig.2

The structure shown in **Fig.2** is substantially the same as that shown in **Fig.1** with the exception that the modified structure embraces a larger gas generating chamber which is divided by means of an insulating plate **31** and is further provided with a depending baffle plate **32** which separates the gas generating chamber **33** from the float chamber **34** in which the float **35** operates in the same manner as in **Fig.1**. Moreover, the structure shown in **Fig.2** provides a series of spaced depending plates **36** which are electrically connected to the wire **37**, and a second series of similar plates **38** which are electrically connected to the wire **39** and are kept apart from the plates **36** by the insulating plate **31**.

Gases generated on the surfaces of the plates **36** and **38** pass upward through the orifice **39a** into the gas passageway **40** where they are mixed with air as explained in the description of **Fig.1**.

A pipe **51,** bent as shown in **Fig.2**, passes downwards through the housing of the carburettor and has a series of spaced apertures **'a'** in its horizontal portion beneath the plates **36** and **38**. Check valve **53**, with opens upwards, controls air inlet **54**. When a partial vacuum exists in the chamber **33**, air is drawn in through the opening **54** and then passes upwards through the apertures **'a'**. This air tends to remove any bubbles of gas collecting on the plates **36** and **38** and also tends to cool the electrolyte. The check valve **53** automatically closes when a gas pressure exists within the carburettor and thereby prevents the electrolyte from being forced out of the opening **54**.

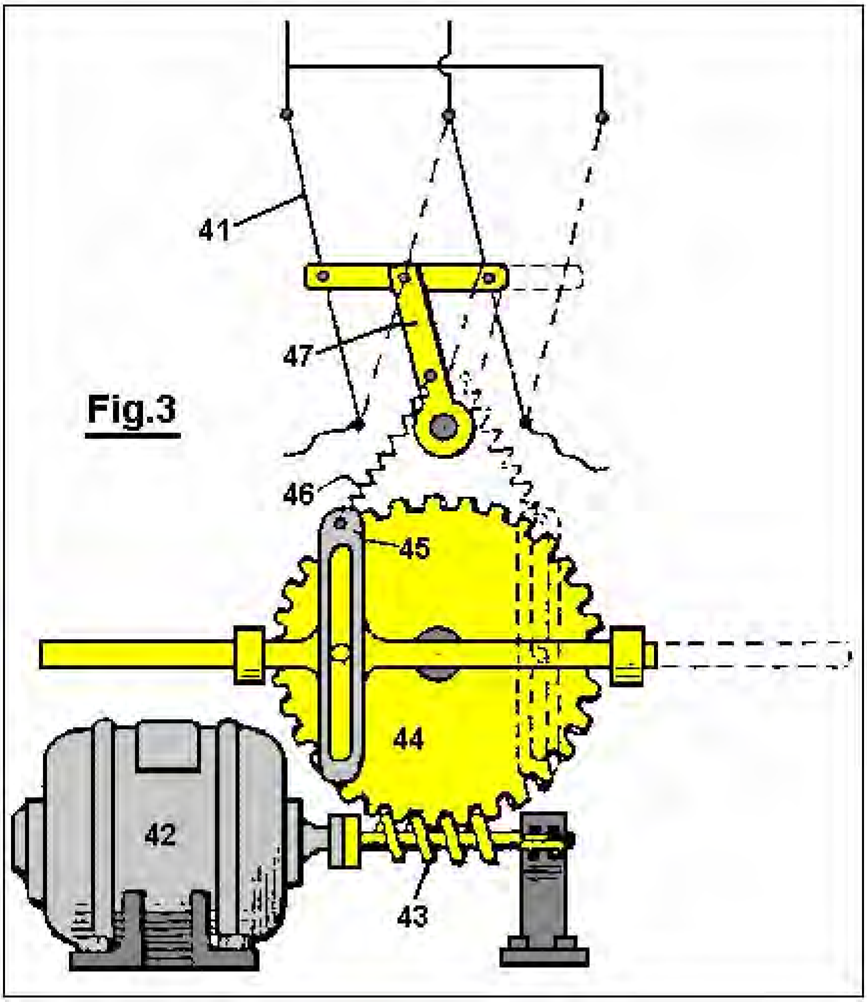

In order to provide for alternate evolution of the gases from the plates **36** and **38**, a pole changer **41**, shown in **Fig.3**, is actuated periodically by the motor **42** which drives the worm **43** and the gear **44** and causes oscillations of the member **45** which is connected by a spring **46** to the arm **47**, thereby causing the pole changer to snap from one position to the other.

In operation, the carburettor shown in **Fig.2** is connected as shown in the wiring diagram of **Fig.4**. A storage battery **48** or other suitable source of direct current is connected to a variable rheostat **49**, switch **50**, pole changer **41** and to the carburettor as shown. Thus the rate of evolution of the gases can be controlled by the setting of the rheostat **49** and the desired alternate evolution of the gases in the compartments of the carburettor is accomplished by means of the periodically operated pole changer **41**.

Manifestly, the construction shown is capable of considerable modification and such modification as is considered within the scope and meaning of the appended claims is also considered within the spirit and intent of the invention.

ARCHIE BLUE

US Patent 4,124,463 7th November 1978 Inventor: Archie H. Blue

ELECTROLYTIC CELL

Please note that this is a re-worded excerpt from this patent. It describes an electrolyser system where air is drawn through the electrolyte to dislodge bubbles from the electrodes.

ABSTRACT

In the electrolytic production of hydrogen and oxygen, air is pumped through the cell while the electrolysis is in progress so as to obtain a mixture of air, hydrogen and oxygen.

BACKGROUND AND BRIEF DESCRIPTION OF THE INVENTION

This invention relates to the production of gases which can be utilised primarily, but not necessarily, as a fuel.

To decompose water electrically, it is necessary to pass direct current between a pair of electrodes which are immersed in a suitable electrolyte. During such electrolysis, it is normal to place some form of gas barrier between the two electrodes, in order to prevent the gases produced forming an explosive mixture. However provided suitable precautions are taken, it has been found that the gases can be allowed to mix and can be fed into a storage tank for subsequent use. Because the gases when mixed form an explosive mixture, it is possible for the mixture to be utilised, for instance, as a fuel for an internal combustion engine. In such circumstances it is desirable that the gases should also be mixed with a certain proportion of air in order to control the explosive force which results when the gases are ignited.

One of the difficulties encountered with electrolysis is that bubbles of gas are liable to remain on the electrodes during the electrolysis thus effectively limiting the area of electrode which is in contact with the electrolyte and preventing optimum current flow between the electrodes. Because it is desirable that the gases evolved during the electrolysis be mixed with air, it is possible for air to be passed through the cell while electrolysis is in progress. The passage of air through the cell can be directed past the electrodes so as to pick up any gas bubbles on the electrodes.

Accordingly, the invention comprises an electrolytic cell with a gas tight casing, several electrodes supported on a central post within the cell, spaced apart and electrically insulated from each other, each alternative electrode being connected to a positive direct current source or a negative direct current source respectively and wherein the central post is in the form of a tube, one end of which is extended out of the cell and connected to a source of air under pressure, with the other end of the central post terminating in an air outlet below the electrodes. The cell also includes a gas outlet to carry the air forced into the cell through the central post and to exhaust the gases produced by electrolysis.

DETAILED DESCRIPTION OF THE INVENTION

Various forms of the invention will now be described with the aid of the accompanying drawings wherein:

Fig.1 is a diagrammatic elevational view partly in section of one form of the invention,

FIG. 1

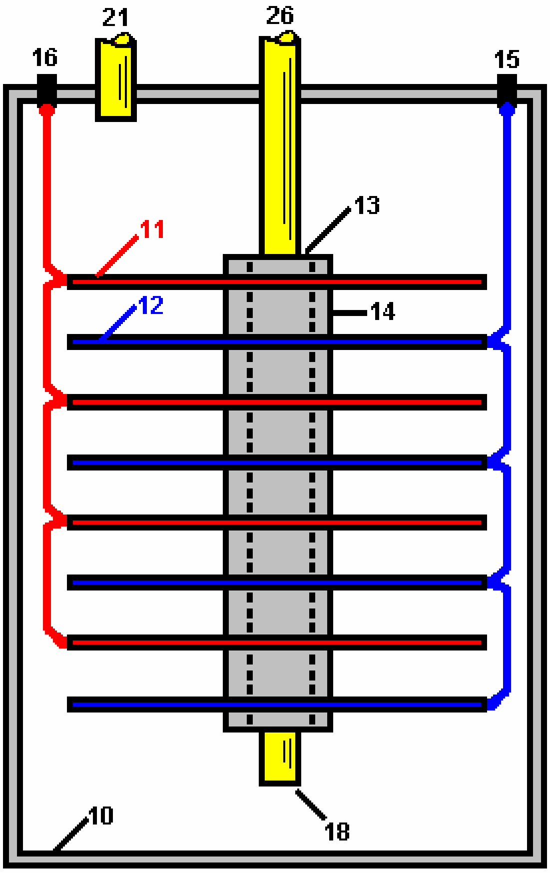

Fig.2 is a diagrammatic elevational view partly in section of a modified form of the invention,

FIG. 2

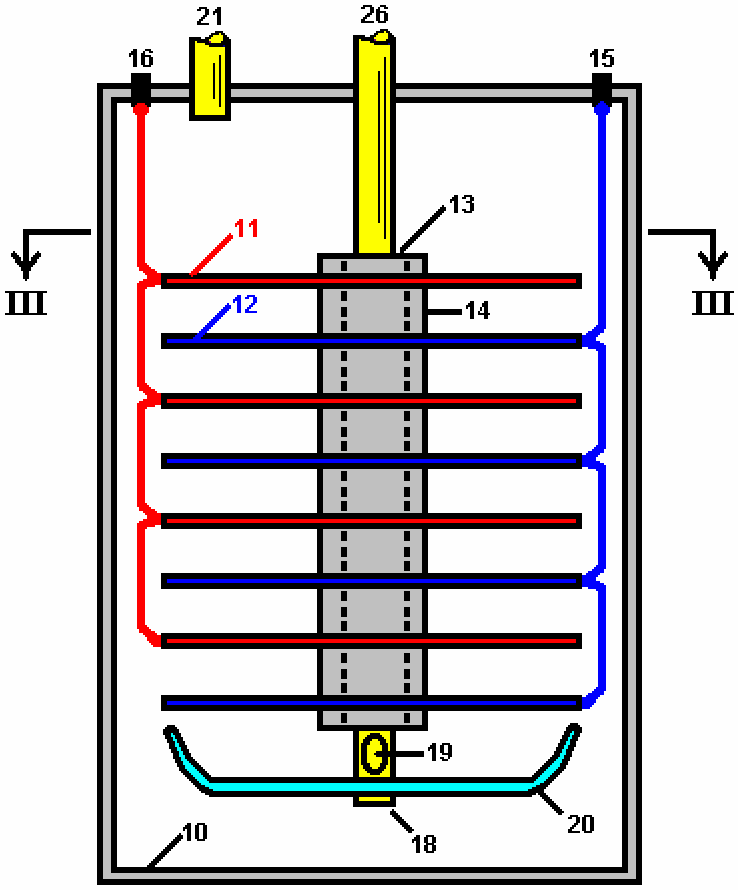

Fig.3 is a section along the line **III--III** of **Fig.2**.

FIG. 3

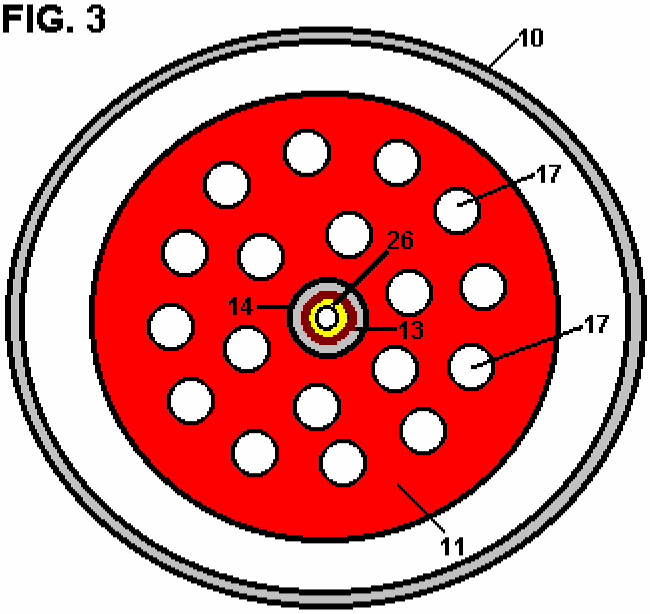

Section III - III

FIG. 1

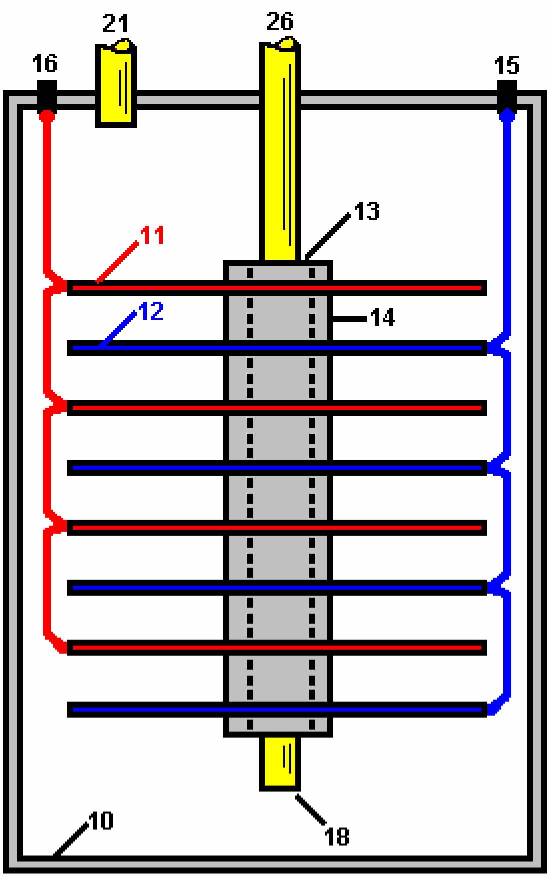

The cell as shown in **Fig.1** comprises a gas-tight casing **10** which is formed from a material incapable of corrosion, such as plastic. Several cathode plates **11** and several anode plates **12** are supported within the cell on an electrically insulating central post **13**, with the cathode plates and anode plates being spaced apart by means of insulating spacers **14**. The anode plates **12** are all connected in parallel to a positive terminal post **15** while the cathode plates are all connected in parallel to the negative terminal post **16**, these connections being indicated in dotted lines in the drawings. The cathode and anode plates are preferably in the form of discs made from a metal suited to the electrolyte, thus ensuring a satisfactory cell life. These plates may be shaped to conform with the shape of the walls of the cell which may be circular in cross section as indicated or any other desired shape.

The central post **26** is preferably in the form of a tube which extends out of the cell. The lower end of the tube **18** is open so that air can be pumped into the cell through the central post **26** and enter the cell via the lower end **18** where it will pass up through the electrolyte. This keeps the electrolyte in constant motion which assists in the rapid removal of any gas bubbles which may be adhering to the electrode plates.

FIG. 2

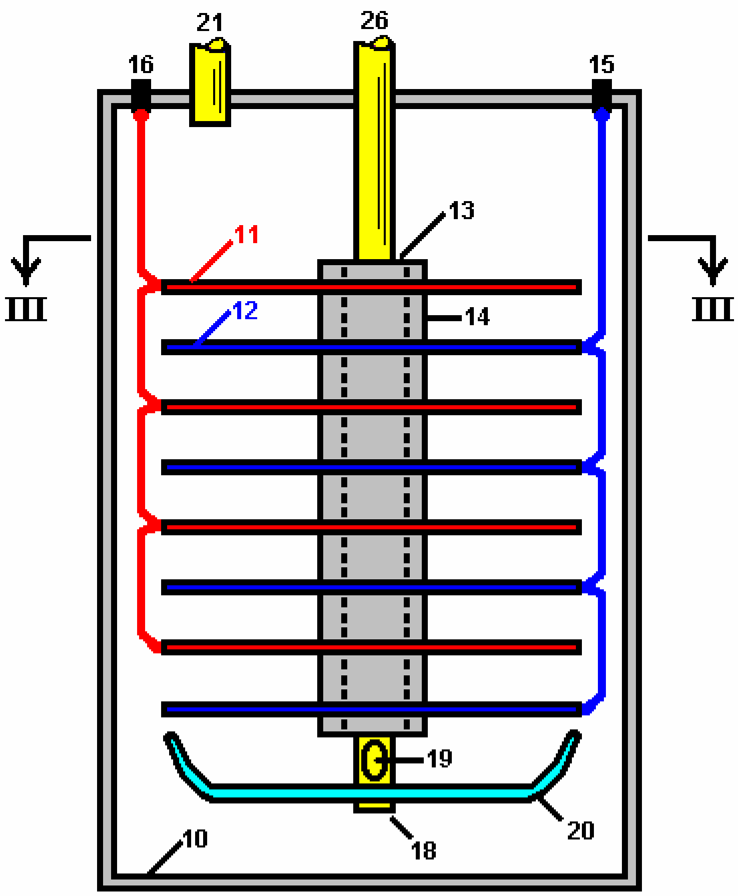

In the modification shown in **Fig.2** and **Fig.3**, each electrode plate is provided with holes **17.** The central post **26** is also provided with at least one air hole **19** adjacent to its the lower end. A deflector plate **20** is also supported by the central post **26**, this plate being dish shaped so as to deflect air issuing out of the air hole **19** up through the holes **17** in the electrodes. This further assists in dislodging any bubbles of gas clinging to the electrode plates.

The cell also includes a gas outlet **21** so that the air which enters the cell, together with the gases produced by electrolysis, can be taken out of the cell into a suitable storage tank (not shown in the drawings). If desired, such storage tank can be arranged to accept the gases under pressure and for this purpose the air pumped into the cell will be pumped in under the required pressure. A gas drier (not shown in the drawings) can also be interposed between the gas outlet **21** and the storage tank.

Although the electrolysis will naturally produce considerable heat, nevertheless it can be found advantageous to install a heater in the cell, preferably in the bottom of the cell, to assist and facilitate the warming up of the electrolyte so that the cell reaches its most efficient operating conditions as quickly as possible.

Preferably also, a current-control device should be employed so that the intensity of the electrolytic action can be controlled.

A mechanism may also be provided for the automatic replenishment of water within the cell as the level of the electrolytic drops during use.

While it is recognised that the mixing of hydrogen and oxygen will create a dangerous explosive mixture, nevertheless by carrying out the invention as described above, the risk of explosion is minimised. The gases produced can be utilised, for instance, as a fuel to power an internal combustion engine and for this purpose it is desirable, as already mentioned, to mix a proportion of air with the gases produced during electrolysis, so that when the mixture is ignited within the cylinder or cylinders of the engine, the explosive force so created can be of the desired amount.

While in the foregoing description reference is made to the utilisation of the mixed gases as a fuel, it will of course be understood that the gases can be separated for individual use.

CLAIMS

1. A process for producing, Through the electrolysis of an aqueous liquid, a combustible mixture of hydrogen, oxygen and air. This is achieved in an electrolytic cell having a gas-tight casing, a substantially central tubular post mounted in the casing and having an air inlet at its upper end, and a several electrodes supported on the post and axially spaced along it, alternate electrodes being connected to a first electrical terminal and to a second electrical terminal respectively connected to a respective poles of a current source and being mutually insulated, the post having an air outlet below the electrodes out of which flows air from the air inlet into the cell and over the electrodes; and a source of air under pressure connected to the said air inlet forcing a flow of air through the aqueous liquid contained in the cell; the cell having in its upper region a common outlet exhausting the combustible mixture comprising air forced through the cell, along with hydrogen and oxygen produced by electrolysis in the cell.

2. The process according to claim 1 wherein the electrodes are discs each having a several holes through them.

3. The process according to claim 1 further including a dish-shaped air deflector plate supported on the post below the air outlet.

4. Apparatus for producing by electrolysis of an aqueous liquid, a combustible mixture of hydrogen and oxygen, comprising: an electrolytic cell having a gas-tight casing, a substantially central tubular post mounted in the casing and having an air inlet at its upper end, and a plurality of electrodes supported on the post and axially spaced along it, alternate electrodes being connected to a first electrical terminal and to a second electrical terminal respectively for connection to respective poles of a current source and being mutually insulated, the post having an air outlet below the electrodes for flow of air from the air inlet into the cell and over the electrodes; a dish-shaped air deflector supported on said post below said air outlet; and a source of air under pressure connected to the said air inlet for forcing a flow of air through the aqueous liquid contained in the cell in operation thereof; the cell having in its upper region a common outlet for exhausting the combustible mixture comprising air forced through the cell and hydrogen and oxygen produced by electrolysis of the liquid in the cell.

5. The apparatus according to claim 4 wherein the electrodes are discs each having a several holes through them.

RUGGERO SANTILLI

US Patent 6,183,604   6th February 2001   Inventor: Ruggero M. Santilli

Durable and Efficient Equipment for the Production of a Combustible and Non-Pollutant Gas from Underwater Arcs and Method therefor

Please note that this is a re-worded excerpt from this patent. It shows how electrolysis of water can be carried out on a large scale as a continuous process.

ABSTRACT

A system for producing a clean burning combustible gas comprising an electrically conductive first electrode and an electrically conductive second electrode. A motor coupled to the first electrode is adapted to move the first electrode with respect to the second electrode to continuously move the arc away from the plasma created by the arc. A water-tight container for the electrodes is provided with a quantity of water within the tank sufficient to submerge the electrodes.

BACKGROUND OF THE INVENTION

1. Field of the Invention

The present invention relates to durable and efficient equipment for the production of a combustible and non-polluting gas from underwater arcs and the method for doing this and more particularly, the invention pertains to producing a combustible gas from the underwater arcing of electrodes which move with respect to each other.

2. Description of the Prior Art

The combustible nature of the gas bubbling to the surface from an underwater welding arc between carbon electrodes was discovered and patented in the last century. Various improved equipment for the production of said combustible gas have been patented during this century. Nevertheless, the technology has not yet reached sufficient maturity for regular industrial and consumer production and sales because of numerous insufficiencies, including excessively short duration of the carbon electrodes which requires prohibitive replacement and service, as well as low efficiency and high content of carbon dioxide responsible for the greenhouse effect. As a result of numerous experiments, this invention deals with new equipment for the production of a combustible gas from underwater arcs between carbon electrodes which resolves the previous problems, and achieves the first known practical equipment for industrial production and sales.

The technology of underwater electric welding via the use of an arc between carbon electrodes to repair ships, was established in the last century. It was then discovered that the gas bubbling to the surface from underwater arcs is combustible. In fact, one of the first U.S. patents on the production of a combustible gas via an underwater electric arc between carbon electrodes dates back to 1898 (U.S. Pat. No. 603,058 by H. Eldridge).

Subsequently, various other patents were obtained in this century on improved equipment for the production of this combustible gas, among which are:

US Pat. No. 5,159,900 (W.A. Dammann abd D. Wallman, 1992); U.S.Pat. No. 5,435,274 (W. H. Richardson, Jr., 1995); U.S. Pat. No. 5,417,817 (W. A. Dammann and D. Wallman, 1995); U.S. Pat. No. 5,692,459 (W. H. Richardson, Jr., 1997); U.S. Pat. No. 5,792,325 (W. H. Richardson, Jr., 1998); and U.S. Pat. No. 5,826,548 (W. H. Richardson, Jr., 1998).

The main process in these inventions is essentially the following. The arc is generally produced by a DC power unit, such as a welder, operating at low voltage (25-35 V) and high current (300 A to 3,000 A) depending on the available Kwh input power. The high value of the current brings the tip of the carbon electrode in the cathode to incandescence, with the consequential disintegration of the carbon crystal, and release of highly ionised carbon atoms to the arc. Jointly, the arc separates the water into highly ionised atoms of Hydrogen and Oxygen. This causes a high temperature plasma in the immediate surrounding of the arc, of about 7,000^{o}F, which is composed of highly ionised H, O and C atoms.

A number of chemical reactions then occur within or near the plasma, such as: the formation of the H_2O_2 molecule; the burning of H and O into H_2O; the burning of C and O into CO; the burning of CO and O into CO_2, and other reactions. Since all these reactions are highly exothermic, they result in the typical, very intense glow of the arc within water, which is bigger than that of the same arc in air. The resulting gases cool down in the water surrounding the discharge, and bubble to the surface, where they are collected with various means. According to numerous measurements conducted at various independent laboratories, the combustible gas produced with the above process essentially consists of 45%-48% H_2, 36%-38% CO, 8%-10% CO_2, and 1%-2% O_2, the remaining gas consisting of parts per million of more complex molecules composed by H, O and C.

This process produces an excellent combustible gas because the combustion exhausts meet all current EPA requirement without any catalytic converter at all, and without the highly harmful carcinogenic pollutants which are contained in the combustion exhausts of gasoline, diesel, natural gas and other fuels of current use.

Despite the indicated excellent combustion characteristics, and despite research and development conducted by inventors for decades, the technology of the combustible gas produced by an underwater arc between carbon electrodes has not reached industrial maturity until now, and no equipment producing said combustible gas for actual practical usages is currently sold to the public in the U.S.A. or abroad, the only equipment currently available for sale being limited to research and testing. The sole equipment currently sold for public use produce different gases, such as Brown's gas which is not suitable for use in internal combustion engines because it implodes, rather than explodes, during combustion.

The main reason for lack of industrial and consumer maturity is the excessively short duration of the carbon electrodes, which requires prohibitive replacement and services. According to extensive, independently supervised, and certified measurements, the electrodes are typically composed of solid carbon rods of about 3/8 inch (9 mm) in diameter and about 1 foot length. Under 14 Kwh power input, said electrodes consume at the rate of about one and one quarter inch (32 mm) length per minute, requiring the halting of the operation, and replacement of the electrodes every ten minutes.

The same tests have shown that, for 100 Kwh power input, said electrodes are generally constituted by solid carbon rod of about 1 inch diameter and of the approximate length of one foot, and are consumed under a continuous underwater arc at the rate of about 3 inch length per minute, thus requiring servicing after 3 to 4 minutes of operation. In either case, current equipment requires servicing after only a few minutes of usage, which is unacceptable on industrial and consumer grounds for evident reasons, including increased risks of accidents for very frequent manual operations in a piece of high current equipment.

An additional insufficiency of existing equipment is the low efficiency in the production of said combustible gas, which efficiency will from now on be referred to as the ratio between the volume of combustible gas produced in cubic feet per hour (cfh) and the real input power per hour (Kwh). For instance extensive measurements have established that pre-existing equipment has an efficiency of 2-3 cfh/Kwh. Yet another insufficiency of existing equipment is the high carbon dioxide content in the gas produced. Carbon dioxide is the gas responsible for the greenhouse effect. In fact, prior to combustion the gas has a CO_2 content of 8%-10% with a corresponding content after combustion of about 15% CO_2, thus causing evident environmental problems.

SUMMARY OF THE INVENTION

In view of the foregoing disadvantages inherent in the known types of traditional equipment for the production of combustible and non-polluting gases now present in the prior art, the present invention provides improved durable and efficient equipment for the production of a combustible and non-polluting gas from underwater arcs and the method of production.

As such, the general purpose of the present invention, which will be described later in greater detail, is to provide new, improved, durable and efficient equipment for the production of a combustible and non-polluting gas from underwater arcs and the method for achieving this, a method which has all the advantages of the prior art and none of the disadvantages.

To attain this, the present invention essentially comprises of a new and improved system for producing a clean burning combustible gas from an electric arc generating plasma under water. First provided is an electrically conductive anode fabricated of tungsten. The anode is solid in a generally cylindrical configuration with a diameter of about one inch and a length of about three inches. Next provided is a generally Z-shaped crank of a electrically conductive material. The crank has a linear output end supporting the anode. The crank also has a linear input end essentially parallel with the output end. A transverse connecting portion is located between the input and output ends.

An electrically conductive cathode is next provided. The cathode is fabricated of carbon. The carbon is in a hollow tubular configuration with an axis. The cathode has a supported end and a free end. The cathode has a length of about 12 inches and an internal diameter of about 11.5 inches and an external diameter of about 12.5 inches. A motor is next provided. The motor has a rotatable drive shaft. The drive shaft has a fixed axis of rotation. The motor is coupled to the input end of the crank and is adapted to rotate the crank to move the output end and anode in a circular path of travel. The circular path of travel has a diameter of about twelve inches with the anode located adjacent to the free end of the cathode. In this manner the anode and the arc are continuously moved around the cathode and away from the plasma created by the arc.

Next provided is an axially shifted support. The support is in a circular configuration to receive the supported end of the cathode and to move the cathode axially toward the anode as the carbon of the cathode is consumed during operation and use. Next provided is a water tight container for the anode, cathode, crank and support. A quantity of water is provided within the tank, sufficient to submerge the anode and the cathode. Next provided is an entrance port in the container. The entrance port functions to feed water and a carbon enriched fluid into the container to supplement the carbon and water lost from the container during operation and use. Next provided is a source of potential. The source of potential couples the anode and the cathode. In this manner an electrical arc is created between the anode and the cathode with a surrounding plasma for the production of gas within the water. The gas will then bubble upwards and collect above the water. Last provided is an exit port for removing the gas which results from the application of current from the source of potential to the anode and the cathode while the anode is rotating and the cathode is shifting axially.

This broad outline indicates the more important features of the invention in order that the detailed description which follows may be better understood and in order that the present contribution to the art may be better appreciated. There are, of course, additional features of the invention that will be described and which will form the subject matter of the claims made.

In this respect, before explaining at least one embodiment of the invention in detail, it is to be understood that the invention is not limited in its application to the details of construction and to the arrangements of the components set forth in the following description or illustrated in the drawings. The invention is capable of other embodiments and of being practised and carried out in various ways. Also, it is to be understood that the phraseology and terminology employed here are for the purpose of descriptions and should not be regarded as limiting the scope of this invention.

It is another object of the present invention to provide new and improved durable and efficient equipment for the production of a combustible and non-polluting gas from underwater arcs and method therefor which may be easily and efficiently manufactured and marketed on a commercial basis.

Lastly, it is an object of the present invention to provide a new and improved system for producing a clean burning combustible gas comprising an electrically conductive first electrode, an electrically conductive second electrode, a motor coupled to the first electrode and adapted to move the first electrode with respect to the second electrode to continuously move the arc away from the plasma created by the arc, and a water-tight container for the electrodes with a quantity of water within the tank sufficient to submerge the electrodes.

These together with other objects of the invention, along with the various novel features which characterise the invention, are pointed out particularly in the claims section of this disclosure. For a better understanding of the invention, its operating advantages and the specific objects attained by its uses, reference should be made to the accompanying drawings and descriptive matter in which there is illustrated preferred embodiments of the invention.

BRIEF DESCRIPTION OF THE DRAWINGS

The invention will be better understood and objects other than those set forth above will become apparent when consideration is given to the following detailed description thereof. Such description makes reference to the annexed drawings wherein:

Fig.1 and **Fig.2** are illustrations of prior art equipment for the fabrication of a pollutant-free combustible gas produced by an electric arc under water constructed with prior art techniques.

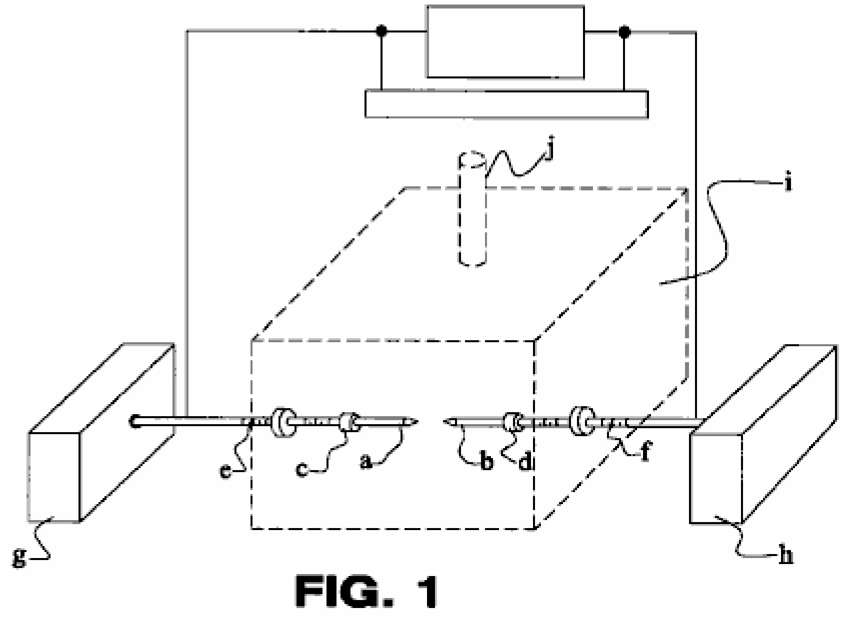

FIG. 1

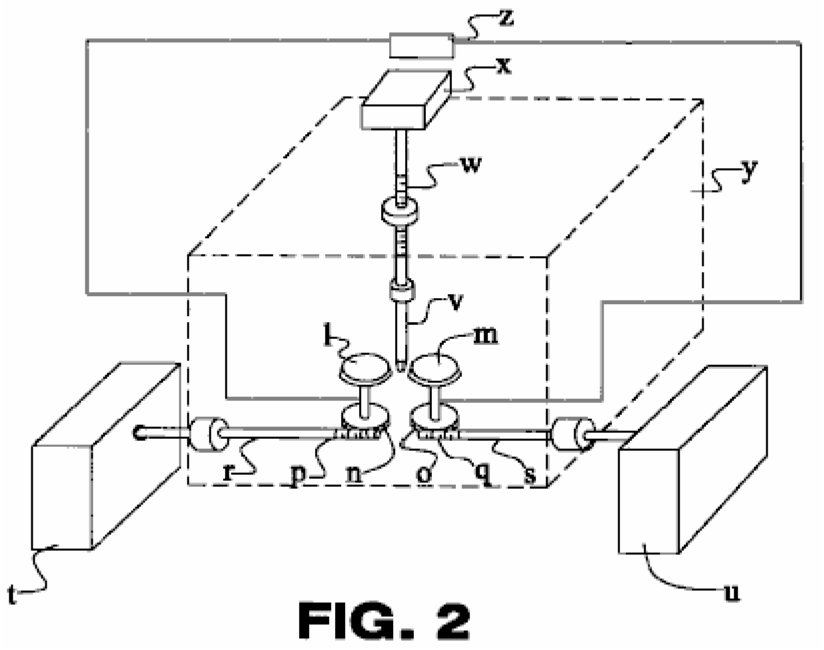

FIG. 2

Fig.3 is a schematic diagram depicting the principles of the present invention.

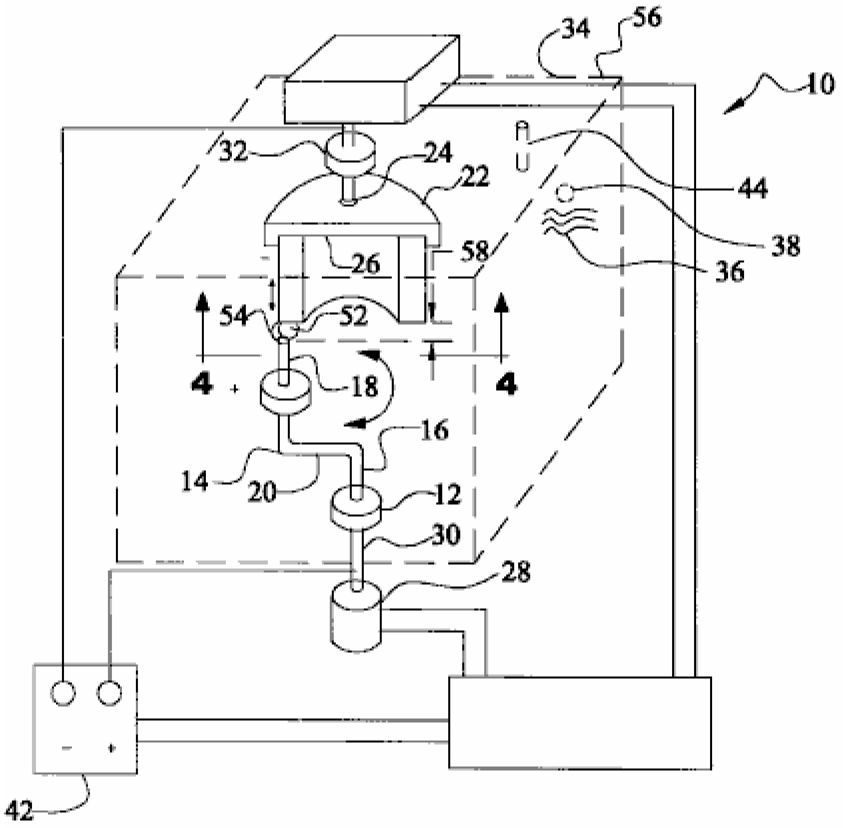

FIG. 3

Fig.4 is a schematic diagram of a partial sectional view taken along line 4--4 of Fig.3, depicting an additional embodiment of the present invention.

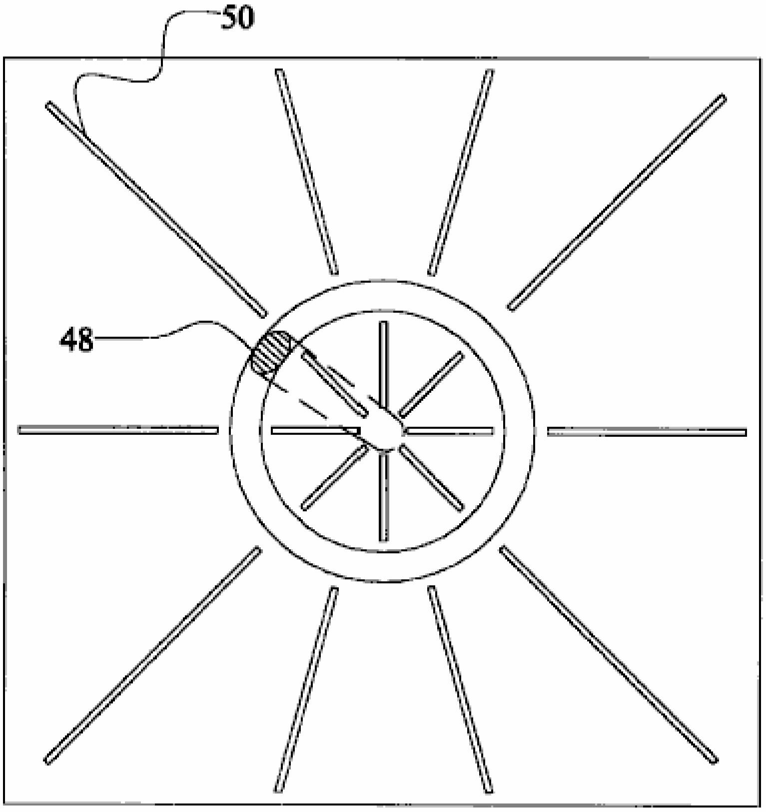

FIG. 4

The same reference numerals refer to the same parts throughout the various Figures.

DESCRIPTION OF THE PREFERRED EMBODIMENT

With reference to **Fig.1**, a typical embodiment of the electrodes of current use for the production of a combustible gas from underwater arcs is that in which one or more pairs of solid carbon rods are immersed within the selected liquid head-on along their cylindrical symmetry axis. The activation of the arc first requires the physical contact of the tips of the two rods, with consequential large surge of electricity due to shorting, followed by a retraction of the electrodes up to the arc gap, which is typically of the order of 1/16 inch (1.5 mm) depending on the input power. The components of such embodiment include:

a, b: carbon electrodes
c, d: holder of a & b
e, f: screws for advancement of a & b
g, h: mechanism for the advancement of a & b
i: reaction chamber
j: exit of combustible gas from chamber

Numerous alternatives to the above typical embodiment have been invented. For instance, in the U.S. Pat. No. 603,058 (H. Eldridge, 1898) one can see a variety of configurations of the electrodes, including rod shaped anodes and disk-shaped cathodes. As a further example also with reference to Fig.1, the embodiment of U.S. Pat. No. 5,159,900 (W. A. Dammann and D. Wallman, 1992) and U.S. Pat. No. 5,417,817 (W. A. Dammann and D. Wallman, 1995), essentially consists of the preceding geometric configuration of the electrodes, complemented by a mechanism for the inversion of polarity between the electrodes, because the cathode experiences the highest consumption under a DC arc, while the anode experiences a much reduced consumption. Even though innovative, this second embodiment also remains manifestly insufficient to achieve the duration of the electrodes needed for industrial maturity, while adding other insufficiencies, such as the interruption of the arc at each time the polarities are inverted, with consequential loss of time and efficiency due to the indicated electrical surges each time the arc is initiated.

As an additional example, and with reference to **Fig.2**, the mechanism of the U.S. Pat. No. 5,792,325 (W. H. Richardson, Jr., 1998), has a different preferred embodiment consisting of one or more pairs of electrodes in the shape of carbon disks rotating at a distance along their peripheral edges, in between which an electrically neutral carbon rod is inserted. This rod causes the shorting necessary to activate the arc, and then the maintenance of the arc itself. This latter mechanism also does not resolve the main problem considered here. In fact, the neutral carbon rod is consumed at essentially the same rate as that of the preceding embodiments. In addition, the mechanism has the disadvantage of breaking down the single arc between two cylindrical electrodes into two separate arcs, one per each the two couplings of the conducting disk and the neutral rod, with consequential reduction of efficiency due to the drop of voltage and other factors. Numerous means can be envisaged to improve the life of carbon electrodes, such as mechanisms based on barrel-type rapid replacements of the carbon rods. These mechanisms are not preferred here because the arc has to be reactivated every time a rod is replaced, thus requiring the re-establishing of the arc with physical contact, and consequential shortcomings indicated earlier. The components of such embodiment include:

l, m: carbon disk electrodes
n, O: gear rotating l & m
p, q: side gear for rotating n & o
r, s: shaft of gears p & q
t, u: mechanism for rotating shafts r & s
v: electrodes neutral vertical rod
w: advancement of v
x: mechanism for advancement of v
y: reactor chamber
z: electrical power mechanism

This inventor believes that the primary origin of the insufficiency considered here, rests with the carbon rods themselves, which are indeed effective for underwater welding, but are not adequate for the different scope of producing a combustible gas from underwater arcs.

With reference to **Fig.3**, this invention specifically deals with equipment which solves the insufficiency considered here, by achieving the duration of operation desired by the manufacturer, while sustaining a continuous arc without interruptions for the entire desired duration. For the case of large industrial production of this combustible gas with electrical energy input of the order of 100 Kwh, a representative equipment of this invention essentially consists of:

1) One or more arcs produced by a DC current as typically available in commercially sold power units;
2) One or more anodes made of solid rods of about 1 inch in diameter and about 2 inches in length and composed of a high temperature conductor, such as Tungsten or ceramic. Extensive and diversified experiments have established that the consumption of an anode composed of ordinary Tungsten is minimal, and definitely of the order of several weeks of operation.
3) One or more carbon-based cathodes in the configuration of a large hollow rod geometrically defined as a cylinder with the same thickness of the anode, but with a radius and length selected to provide the desired duration. This cathode performs the vital function of becoming incandescent in the immediate vicinity of the arc, thus releasing carbon to the plasma.

More specifically, and with reference to **Fig.3** and **Fig.4**, the present invention essentially comprises a new and improved system **10** for producing a clean burning combustible gas from an electric arc generating plasma under water. First provided is an electrically conductive anode **12** fabricated of tungsten. The anode is solid in a generally cylindrical configuration with a diameter of about one inch and a length of about three inches.

Next provided is a generally Z-shaped crank **14** of a electrically conductive material. The crank has a linear output end **16** supporting the anode. The crank also has a linear input end **18** essentially parallel with the output end. A transverse connecting portion **20** is located between the input and output ends.
An electrically conductive cathode **22** is next provided. The cathode is fabricated of carbon. The carbon is in a hollow tubular configuration with an axis. The cathode has a supported end **24** and a free end **26**. The cathode has a length of about 12 inches and an internal diameter of about 11.5 inches and an external diameter of about 12.5 inches.

A motor **28** is next provided. The motor has a rotatable drive shaft **30**. The drive shaft has a fixed axis of rotation. The motor is coupled to the input end of the crank and is positioned so as to rotate the crank and move the output end and anode in a circular path of travel. The circular path of travel has a diameter of about twelve inches with the anode located adjacent to the free end of the cathode. In this manner the anode and the arc are continuously moved around the cathode and away from the plasma created by the arc.

Next provided is an axially shifted support **32**. The support is in a circular configuration to receive the supported end of the cathode and to move the cathode axially toward the anode as the carbon of the cathode is consumed during operation and use.

A water-tight container **34** for the anode, cathode, crank and support is next provided. A quantity of water **36** is provided within the tank sufficient to submerge the anode and the cathode.

An entrance port **38** is provided in the container. The entrance port functions to feed water and a carbon enriched fluid into the container to supplement the carbon and water lost from the container during operation and use.

Next provided is a source of potential **42**. The source of potential couples the anode and the cathode. In this manner an electrical arc is created between the anode and the cathode with a surrounding plasma for the production of gas within the water. The gas will then bubble upwardly to above the water.

Lastly provided is an exit port **44** for the gas resulting from the application of current from the source of potential to the anode and the cathode while the anode is rotating and the cathode is shifting axially.

Fig.4 is a cross-sectional view taken along line 4--4 of Fig.3, but is directed to an alternate embodiment. In such an embodiment, the anode **48** is wing shaped to cause less turbulence in the water when moving. In addition, various supports **50** are provided for abating turbulence and for providing rigidity.

Again with reference to **Fig.3**, the anode rod is placed head-on on the edge of the cylindrical cathode and is permitted to rotate around the entire periphery of the cylindrical edge via an electric motor or other means. (The inverse case of the rotation of the cathode cylinder on a fixed anode rod or the simultaneous rotation of both, are equally acceptable, although more expensive for engineering production). Extensive tests have established, that under a sufficient rotational speed of the anode rod on the cylindrical cathode of the order of 100 r.p.m. or thereabouts, the consumption of the edge of the cathode tube is uniform, thus permitting the desired continuous underwater arc without the interruptions necessary for the frequent cathode rod replacements in the pre-existing configurations.

For the case of smaller electrical power input the above equipment remains essentially the same, except for the reduction of the diameter of the non-carbon based anode and of the corresponding thickness of the carbon-based cylindrical cathode. For instance, for 14 Kwh power input, the anode diameter and related thickness of the cylindrical cathode can be reduced to about 3/8 inch.

The above new equipment does indeed permit the achievement of the desired duration of the electrodes prior to servicing. As a first illustration for industrial usage, suppose that the manufacturer desires an equipment for the high volume industrial production of said combustible gas from about 100 Kwh energy input with the duration of four hours, thus requiring the servicing twice a day, once for lunch break and the other at the end of the working day, as compared to the servicing only after a few minutes of use for the pre-existing equipment.

This invention readily permits the achievement of this duration with this power input. Recall that carbon rods of about 1 inch in diameter are consumed by the underwater arc from 100 Kwh at the speed of about 3 inches in length per minute. Numerous experiments have established that a cylindrical carbon cathode of 1 inch thickness, approximately one foot radius and approximately two feet in length, permits the achievement of the desired duration of 4 hours of continuous use prior to service. In fact, such a geometry implies that each 1 inch section of the cylindrical cathode is consumed in 6 minutes. Since 4 hours correspond to 240 minutes, the duration of four hours of continuous use requires forty 1 inch sections of the cylindrical cathode. Then, the desired 4 hours duration of said cathode requires the radius R = 40/3.14 or 12.7 inches, as indicated. It is evident that a cylindrical carbon cathode of about two feet in radius and about one foot in length has essentially the same duration as the preceding configuration of one foot radius and two feet in length. As a second example for consumer units with smaller power input than the above, the same duration of 4 hours prior to servicing can be reached with proportionately smaller dimensions of said electrodes which can be easily computed via the above calculations.

It is important to show that the same equipment described above also permits the increase of the efficiency as defined earlier. In-depth studies conducted by this inventor at the particle, atomic and molecular levels, here omitted for brevity, have established that the arc is very efficient in decomposing water molecules into hydrogen and oxygen gases. The low efficiency in the production of a combustible gas under the additional presence of carbon as in pre-existing patents is due to the fact that, when said H and O gases are formed in the plasma surrounding the discharge, most of these gases burn, by returning to form water molecules again. In turn, the loss due to re-creation of water molecules is the evident main reason for the low efficiency of pre-existing equipment. The very reason for this poor efficiency is the stationary nature of the arc itself within the plasma, because under these conditions the arc triggers the combustion of hydrogen and oxygen originally created from the separation of the water.

The above described new equipment of this invention also improves the efficiency. In fact, the efficiency can be improved by removing the arc from the plasma immediately after its formation. In turn, an effective way for achieving such an objective without extinguishing the arc itself is to keep the liquid and plasma in stationary conditions, and instead, rapidly move the arc away from the plasma. This function is precisely fulfilled by the new equipment of this invention because the arc rotates continuously, therefore exiting the plasma immediately after its formation. Extensive experiments which were conducted, have established that the new equipment of this invention can increase the efficiency from the 2-3 cu. ft. per kWh of current embodiments to 4-6 cu. ft. per kWh.

It is easy to see that the same equipment of this invention also decreases the content of carbon dioxide. In fact, CO_2 is formed by burning CO and O, thus originating from a secondary chemical reaction in the arc plasma following the creation of CO. But the latter reaction is triggered precisely by the stationary arc within the plasma. Therefore, the removal of the arc from the plasma after its formation via the fast rotation of the anode on the cylindrical edge of the cathode while the liquid is stationary implies a decrease of CO_2 content because of the decrease of the ignition of CO and O.

Extensive experimentation has established that a rotation of 100 r.p.m of the anode over the edge of the cylindrical cathode of radius one foot decreases the content of carbon dioxide in the combustible gas at least by half, thus permitting a significant environmental advantage. The decrease of the CO_2 content also implies an increase of the efficiency, alternatively defined as energy content of the gas produced per hour (BTU/hr) divided by the real electric energy absorbed per hour (kWh). In fact, CO_2 is a non-combustible gas, thus having no meaningful BTU content. It is then evident that, since the total carbon content in the gas remains the same, the decrease of the non-combustible CO_2 is replaced in the gas by a corresponding increase of the combustible CO with the same carbon content, thus increasing the energy content of the gas for the same production volume of pre-existing inventions and for the same real power absorbed.

With reference to **Fig.3**, among various possible alternatives, a preferred embodiment of this invention for the high volume industrial production of a combustible gas from underwater arcs with about 100 Kwh real electrical energy essentially comprises:

A) An enclosed reactor chamber **56** of the approximate dimensions 4 feet high, 3 feet wide and 3 feet long fabricated out of steel sheets or other metal of about 1/4 inch thickness, comprising in its interior the electrodes for the creation of the arc and having some means for the exiting of the gas produced in its interior as well as some means for the rapid access or servicing of the internal electrodes;
B) The filling up of said chamber with a liquid generally consisting of water and/or water saturated with carbon rich water soluble substances;
C) One or more anodes consisting of rods of about 1 inch in diameter and about 2 inches in length made of Tungsten or other temperature resistant conductor;
D) One or more cylindrical shaped carbon cathodes with essentially the same thickness as that of the anodes and with radius and length selected for the desired duration;
E) Electromechanical means for the rotation of the anode rod head-wise on the edge of the cylindrical cathode, or the rotation of the edge of the cylindrical cathode on a stationary anode rod, or the simultaneous rotation of both;
F) Automation for the initiation of the arc and its maintenance via the automatic advancement of the carbon cathode, and/or the anode rod and/or both, in such a way to maintain constant the arc gap **58**.
G) Fastenings of the cylindrical carbon cathode so as to permit its rapid replacement; various gauges for the remote monitoring of the power unit, combustible gas, liquid and electrodes; tank for the storage of the gas produced and miscellaneous other items.

An improved version of the above embodiment is conceived to minimise the rotation of the liquid because of drag due to the submerged rotation of the anode, with consequential return to the stationary character of the plasma **54** and the arc, consequential loss of efficiency and increase of CO_2 content for the reasons indicated above.

With reference to **Fig.4**, and among a variety of embodiments, this objective can be achieved by shaping the rotating anode in the form of a wing with minimal possible drag resistance while rotating within said liquid, and by inserting in the interior of the enclosed reactor chamber panels fabricated out of metal or other strong material with the approximate thickness of 1/8 inch, said panels being placed not in contact with yet close to the cathode and the anode in a radially distributed with respect to the cylindrical symmetry axis of the equipment and placed both inside as well as outside said cylindrical cathode. The latter panels perform the evident function of minimising the rotational motion of said liquid due to drag created by the submerged rotation of the anode.

The remote operation of the equipment is essentially as follows:

1) The equipment is switched on with electric current automatically set at minimum, the anode rod automatically initiating its rotation on the edge of the cylindrical cathode, and the arc being open;
2) The automation decreases the distance between anode and cathode until the arc is initiated, while the amps are released automatically to the desired value per each given Kwh, and the gap distance is automatically kept to the optimal value of the selected liquid and Kwh via mechanical and/or optical and/or electrical sensors;
3) The above equipment produces the combustible gas under pressure inside the metal vessel, which is then transferred to the storage tank via pressure difference or a pump; production of said combustible gas then continues automatically until the complete consumption of said cylindrical carbon cathode.

As to the manner of usage and operation of the present invention, the same should be apparent from the above description. Accordingly, no further discussion relating to the manner of usage and operation will be provided.

With respect to the above description then, it is to be realised that the optimum dimensional relationships for the parts of the invention, to include variations in size, materials, shape, form, function and manner of operation, assembly and use, are deemed readily apparent and obvious to one skilled in the art, and all equivalent relationships to those illustrated in the drawings and described in the specification are intended to be encompassed by the present invention.

Therefore, the foregoing is considered as illustrative only of the principles of the invention. Further, since numerous modifications and changes will readily occur to those skilled in the art, it is not desired to limit the invention to the exact construction and operation shown and described, and accordingly, all suitable modifications and equivalents may be resorted to, falling within the scope of the invention

CHAK CHANG

Patent Application US 2006/060464 23rd March 2006 Inventor: Chak Chang

A METHOD AND APPARATUS FOR GENERATING PLASMA IN A FLUID

This patent application is for a most unusual system which produces a plasma discharge at room temperature and ambient pressure, using voltages as low as 350 volts and currents as low as 50 milliamps and among other things, it is capable of promoting the production of pharmaceuticals, production of nano-particles, the extraction of metals from liquids, low temperature sterilisation of liquid food, use in paper industries to decontaminate the effluent discharge, fragmentation or de-lignifications of cellulose; the removal of odour from discharging liquid in the food industries, and the treatment of fluid effluent. It is also a method of producing hydrogen gas at low cost.

ABSTRACT

A method and apparatus for generating plasma in a fluid. The fluid **3** is placed in a bath **2** having a pair of spaced electrodes **4, 6** forming a cathode and an anode. A stream of bubbles is introduced or generated within the fluid adjacent to the cathode. A potential difference is applied across the cathode and anode such that a glow discharge is formed in the bubble region and a plasma of ionised gas molecules is formed within the bubbles. The plasma may then be used in electrolysis, gas production, effluent treatment or sterilisation, mineral extraction, production of nanoparticles or material enhancement. The method can be carried out at atmospheric pressure and room temperature. The electrodes may carry means to trap the bubbles in close proximity. Partitions may be present between the electrodes.

DESCRIPTION

The invention relates to the provision and utilisation of a plasma formed in a fluid, and in particular to the provision and utility of a plasma formed within bubbles contained in an aqueous medium.

BACKGROUND

Plasma is an electrically conductive gas containing highly reactive particles such as radicals, atoms, plasma electrons, ions and the like. For example plasma may be formed when atoms of a gas are excited to high energy levels whereby the gas atoms lose hold of some of their electrons and become ionised to produce plasma.

Thermal plasma, including plasma arc is known. However plasma arc is associated with high power consumption, the rapid erosion of electrodes when used in electrolysis, the need for catalysts and high-energy loss due to the associated high temperatures.

Clearly therefore, it would be advantageous if a non-thermal plasma could be devised. This would enable the plasma to be used for a number of applications for which plasma is useful without the disadvantages associated with using a high temperature plasma arc.

SUMMARY OF THE INVENTION

According to a first aspect of the present invention, there is provided a method for generating plasma in a fluid, comprising the steps of providing a fluid, introducing and/or generating one or more gas chambers or bubbles within the fluid, whereby the chambers or bubbles are contained by the fluid, and treating the fluid such that a plasma is generated within the chambers or bubbles.

The fluid may be a liquid that is contained within liquid containment means.

The applicant has discovered that a plasma can be generated relatively easily within bubbles within an aqueous medium. This plasma causes dissociation of molecules and/or atoms which can then be treated and/or reacted to obtain beneficial reaction products and/or molecules and/or atoms.

The liquid container may be open to the atmosphere and the process may therefore be carried out at substantially atmospheric pressure. Alternatively the container may be placed inside a sealed reaction chamber, e.g. under partial vacuum. This reduction in pressure can reduce the energy required to achieve a glow discharge within the bubbles passing over a cathode.

Importantly the process is not required to be carried out in a vacuum.

The plasma may be formed, for example, by applying a potential difference across electrodes which are immersed in the liquid.

Upon passing electricity of sufficient potential between two electrodes, the dielectric barrier associated with the bubble/chamber surface breaks down, with the accompanying formation of a glow discharge and plasma inside the gas bubbles or chambers. This enables plasma formation to be effected at very low voltages, current, temperature and pressure, as compared with known methods of plasma formation.

For example, typical voltages and currents associated with plasma arc are in the region of 5 KV and 200 A respectively, whilst in the present invention, a plasma may be provided with a voltage as low as 350 V and a current as low as 50 mA.

The formation of a glow discharge region adjacent said one electrode is caused by a dielectric breakdown in the bubbles surrounding the electrode. The bubbles have a low electrical conductivity and as a result there is a large voltage drop between the electrodes across this bubble region. This voltage drop accounts for a large portion of the overall voltage drop across the electrodes. The plasma is generated within the bubbles contained within the electrolyte. The liquid electrolyte acts as containment for the plasma within the bubbles.

When plasma discharge occurs, any water vapour inside the bubbles will experience plasma dissociation whereby H+, OH^-, O^-, H, H_3, and other oxidative, reductive and radicals species are formed. The formation of charged plasma species will of course also depend on the chemical composition of the electrolyte.

In the present invention, the voltage needed for plasma generation is much lower than plasma glow discharge generated under gas only conditions. For example experiments have demonstrated that plasma begins to occur at voltages as low as 350 V and the maximum voltage required should not exceed 3,000 V. This requirement is based on a current density of 1 to 3 Amp/cm^2 which can be achieved at the point of discharge whereby the current input ranges from 50 mA to about 900 mA.

Plasma can be created, according to the present invention, in a steady manner with a low voltage and current supply, which leads to an economy in power consumption.

The bubbles may contain precursor materials originating in the fluid, which is preferably a liquid, more preferably being an aqueous electrolyte. This material may have been transferred from the liquid to the bubbles by diffusion or evaporation.

Alternatively the precursor may be introduced directly into the bubbles from outside the system.

The step of generating bubbles within the aqueous medium may be accomplished by one or more of the following: electrolysis, ebullition, ultrasonic cavitations, entrainment, scattering, chemical reaction, dissociation by electrons and ion collisions or local heating or ebullition, hydraulic impingement, ultrasonic waves, laser heating, or electrochemical reaction, electrode heating, releasing of trapped gases in the liquid, and externally introduced gases or a combination of them.

Electrolysis bubbles may be generated by the electrode as a result of the potential differences applied across them, e.g. hydrogen bubbles liberated by the cathode or oxygen bubbles liberated by the anode. Ebullition bubbles may be generated by electrical heating in the region of the electrodes. The bubbles may be generated by direct electrical heating or by heating in proximity to the electrode by a moving wire or grid. Microwave heating and heating using lasers may also be used to generate ebullition bubbles.

Cavitation bubbles may be generated by using an ultrasonic bubble generator or a jet of fluid or a jet of a mixture of gas and liquid injected into the electrolyte in proximity to the electrode. Cavitation bubbles may also be generated by hydrodynamic flow of the electrolyte in proximity to the electrode. Scattering of gas in proximity to the electrode may also be used to generate bubbles.

Bubbles may also be generated by a chemical reaction which evolves gas as a reaction product. Typically such reactions involve thermal decomposition of compounds in the electrolyte or acid based reactions in the electrolyte. Bubbles may also be formed in the electrolyte by adding a frother to it.

Typically the generation of bubbles forms a bubble sheath around one electrode. The bubble sheath may have a thickness of anything from a few nanometres to say, 50 millimetres. Typically the bubble sheath may have a thickness of 1 mm to 5 mm. Further, it should be understood that the bubbles may not be homogeneous throughout the sheath.

Gas or vapour formed external to the container may be pumped or blown into the aqueous medium near the cathode.

Thus the composition of the plasma that is generated within the bubbles may be tailored to suit the application to which the plasma is being put and the bubbles may either be generated within the liquid from components within the liquid or introduced into the liquid from outside the containment means.

The bubbles can assume various sizes and shapes including a sheet form air gap or air pocket covering shrouding the electrodes or spread across the liquid medium in micro bubbles.

Liquid foam may also be considered to be bubbles or gas chambers for the purposes of the present invention. This is a highly concentrated dispersion of gas within a continuous interconnecting thin film of liquid. The gas volume can reach up to 80% of a contained area. Gas generated within or introduced to the reactor externally can also be encapsulated within a foaming agent to enable it to undergo plasma discharge treatment.

Gases trapped inside a thick liquid mist in a confined space are also considered to be gas containing bubbles, which contain the gases, and liquid vapours that provide the condition for generation of non-thermal plasma. The liquid may contribute one or more source materials for dissociation during the plasma discharge.

In practise, gas bubbles evolving near and shrouding an electrode in an electrolysis process create a dielectric barrier which prevents and slows down the flow of current. At the same time the dissolved gas or micro bubbles spread and diffuse in the liquid volume thereby creating a high percentage of void fractions (micro gas bubbles) which in turn increase the electric resistance whereby the voltage across the liquid medium is raised. When the voltage has increased sufficiently, gas trapped inside the bubbles undergoes non-equilibrium plasma transformation. At this point, di-electric breakdown occurs enabling resumption of current flow through the bubbles sheath or air pocket layer.

Any water molecules and atoms lining the gas and liquid interface of a bubble shell will also be subjected to the influence of the plasma to produce H^+ and OH^- and other radical species. Some of these neutralised atoms and molecules will transpose into the gas bubbles as additional gas that increases the size of the bubble. As such the bubbles pick up more liquid vapours before a next succession of plasma discharge. Such a cycle of such repetitive discharge can take place in a fraction of a second to several seconds depending on the make up of the electrode and reactor.

The step of generating bubbles within the aqueous medium may include adding a foaming agent to the aqueous medium such that bubbles are formed within foam. The foam bubbles are confined by an aqueous medium that is electrically conductive. The foam bubbles can vary widely in size down to a fraction of a millimetre.

The step of generating bubbles may include forming an aerosol mist. The gas within the aerosol mist broadly defines bubbles in the sense that there are volumes of gas between liquid droplets. These bubbles in the form of spaces between liquid drops function in a similar way to conventional bubbles within a liquid and a plasma is formed in this gas in the same way as described above.

An advantage of foam and aerosol mist is that it provides for good mixing of gaseous components within the mist and foam. The plasma is generated in the bubbles of the foam and aerosol mist in the same way that they are formed in an aqueous liquid, e.g. by passing electrical current between spaced electrodes within the foam or mist.

The step of forming a glow discharge in the bubble region may be achieved by increasing the potential difference across the electrodes above a certain threshold point.

The formation of a glow discharge and generation of plasma within the bubbles may be assisted by a pulsed or steady power supply, a magnetron field, ultrasonic radiation, a hot filament capable of electron emission, laser radiation, radio radiation or microwave radiation. The energy requirements may also be assisted by a combination of any two or more of the above features. These factors may have the effect of lowering the energy input required to reach the threshold potential difference at which glow discharge is formed.

In conventional electrochemical processes bubbles are regarded as undesirable. As a result concerted efforts are made to avoid the generation of bubbles during the operation of electrochemical cells. By contrast the process of the current invention deliberately fosters the formation of bubbles and utilises bubbles in proximity to the electrode as an essential feature of the invention. The bubble sheath surrounding the electrode is essential to establishing a plasma region which then gives rise to the plasma deposition on the article.

Thus the plasma is formed within bubbles and the molecules and/or atoms that are ionised are surrounded by liquid which effectively provides a containment structure within which the plasma is contained. The liquid in turn generally opens to the atmosphere.

Plasma glow discharge can be fairly easily accomplished within the cell because the sheath of bubbles has the effect of causing a substantial proportion of the voltage drop to occur across the bubble sheath. It is concentrated in this area rather than a linear drop across the electrode space. This provides the driving force to generate plasma glow discharge and from there deposition of the ionic species.

The electrical charge is preferably applied in pulses, since this enables plasma production at lower voltages.

The fluid is preferably a liquid electrolyte, for example an aqueous medium, whereby in one preferred embodiment, the medium is water.

The electrolyte may comprise a carrier liquid and /or a source or precursor of the material to be ionised by the plasma.

When the liquid is water, charged plasma particles include species such as OH radicals, O^- and H^+, -OH, O_2 and O_3, which will react with the surrounding liquid.

Distilled water is known to be dielectric and non-conductive. It is however when water contains impurities such as dissolved minerals, salts and colloids of particles, whereby water becomes conductive, that ionisation and electrolysis can occur.

The method may further include adding an additive, such as an acidic or alkaline conductivity enhancing agent, to the aqueous medium to enhance this electrical conductivity such as organic salts or inorganic salts, e.g. KCl, $MgCl_2$, NaOH, Na_2CO_3, K_2CO_3, H_2SO_4, HCl.

The method may include adding a surfactant to the aqueous medium for lowering the surface tension of the medium and enhancing the formation of bubbles, e.g. to stabilise bubble formation.

The electrolyte may further include additives in the form of catalysts for increasing the reaction of molecules and/or atoms produced in the plasma, additives for assisting the formation of bubbles, and additives for buffering the pH.

The method may further include cooling the electrolyte to remove excess heat generated by the plasma reaction and regulating the concentration of one or more components within the electrolyte.

The cooling may comprise drawing electrolyte from the bath pumping it through a heat exchanger, and then returning it to the bath.

Plasma creation, according to the present invention can be effected in the absence of extreme conditions, for example plasma according to the present invention may be provide under atmospheric pressure and at room temperature.

During plasma production according to the present invention, a shroud of bubbles preferably builds up and smothers around at least one of the electrodes, whereby electrical charge builds up in the bubble shroud thereby creating a dielectric barrier which impedes current flow, whereby electrical resistance in the fluid medium builds up so that voltage through the medium is raised to a degree such that gas within the bubbles is excited to an energy level at which a plasma is produced.

The method according to the present invention preferably comprises the further step of exposing the plasma to a material, which on contact with the plasma undergoes a chemical and/or physical change.

For example the plasma can be used to cause dissociation of toxic compounds and then break down the compounds and/or cause them to undergo reactions leading to innocuous reaction products.

The plasma produced according to the present invention, which will be referred to as 'under-liquid' plasma has the same physical and chemical properties as plasma produced according to known methods and accordingly also has the utility of such plasma.

The under-liquid plasma according to the present invention can create an active catalytic condition which facilitates gas and liquid interaction. As such, the plasma according to the present invention, may promote any reaction which takes place in a liquid medium, for example chemical reactions, the production of pharmaceuticals, production of nano-particles, the extraction of metals from liquid, low temperature sterilisation of liquid food, use in paper industries to decontaminate the effluent discharge, fragmentation or de-lignifications of cellulose; the removal of odour from discharging liquid in the food industries, and the treatment of fluid effluent. Material may be chemically modified by means comprising one or more of the following: ionisation, reduction, oxidation, association, dissociation, free radical addition/removal, whereby, optionally, following chemical modification, the material is removed.

The invention may be used to tackle existing problems. For example, water that has been used in industrial processes or used in some other way has to be treated to remove harmful components before it is returned to ground water. This is typically achieved by reacting the harmful components with other chemical components introduced to the water to form relatively harmless products. Many undesirable components are treated fairly effectively in this way.

However some harmful components within water are not capable of being treated in this fashion. This poses a problem as these harmful components, e.g. contaminants, need to be removed from the water before it is returned to ground water. One known way of treating some of these components is to use an electric arc process to break down these toxic chemicals. However an electric arc process requires a substantial amount of energy to arc between electrodes within the liquid and is therefore costly. In addition the number of chemicals that are able to be treated in this way is limited. A further limitation of these processes is that they often cause rapid consumption and degradation of electrode material. Applicant believes that this water could be better treated by the method of this invention.

Moreover, the electric arc method of providing plasma, applies a high voltage across closely spaced electrodes causing the break down and ionisation of molecules, and then a surge of electrical current between the electrodes.

Further, many metals or mineral occur naturally in the ground in the form of ores as mineral oxides. The minerals need to be reduced to useful minerals. Typically the reduction is carried out using pyrometallurgical techniques, e.g. such as are used in electric arc furnaces. These treatments are very aggressive and utilise enormous amounts of electrical energy. Clearly it would be advantageous if a simpler more streamlined and more energy efficient method of reducing a mineral oxide to a mineral could be devised. Applicant believes that this could be done by the method of this invention.

Yet further, the generation of electrical energy with fuel cells is seen as an exciting new area of technology. Such fuel cells utilise hydrogen as a fuel. Accordingly a relatively inexpensive source of this hydrogen as a fuel is required. Currently hydrogen is produced by solar cells. However the present invention could be used to provide such a source of hydrogen.

In one form of the current invention, the undesirable compounds may be deposited on an electrode, e.g. the cathode, as a layer or coating. The compound can then be removed from the liquid by simply removing it from the aqueous medium.

In another form, the undesirable component can be reacted with a chemical compound, e.g. within the plasma, to form a solid compound, e.g. a salt in the form of a precipitate, that settles out of the aqueous medium and can then be removed from the aqueous medium.

Typically the undesirable component will be toxic to animals or harmful to the environment. However components that are undesirable in other ways are also included within the scope of the invention.

Applicant envisages that this will be particularly useful for the removal of harmful heavy metals from waste water. It will probably also be useful for the treatment of contaminated gases. Such gases will be introduced to the aqueous medium in such a way that they form part of the bubbles passing over the cathode and then be treated as described above.

Another example is the extraction of a mineral, e.g. a metal, from its metal oxide, the method including: dissolving the mineral oxide in an aqueous medium and then subjecting it to the method described above according to the first aspect of the invention whereby a plasma is generated within bubbles passing over the cathode, and the plasma reduces the mineral oxide to the mineral per se.

The ozone which is formed in the plasma can then be reacted with hydrogen to form an innocuous compound such as water. The reduced mineral which is formed in the plasma, e.g. a metal, may be deposited on the cathode or else may be precipitated out as a solid in the container.

In the case of water, hydrogen and oxygen produced, travel to the anode and cathode and are preferably then removed. As such, the process according to the present invention is an economical, simple and effective way of producing hydrogen.

The hydrogen produced in this fashion may be used as fuel, e.g. in fuel cells for the generation of electricity. Applicant believes that hydrogen can be produced relatively inexpensively in this fashion. Fuel cell technology is currently receiving an increased level of acceptance looking for a cheap source of the supply of hydrogen.

According to another aspect of the present invention, there is provided the use of this 'under-liquid' plasma in one or more of the following: chemical and/or physical treatments of matter, electrolysis, gas production, in particular hydrogen gas production; water, fluid and/or effluent treatment; mineral extraction; sterilisation of drinking water and/or liquid food, production of nano-particles, the enhancement of material chemical and physical properties.

According to a further related aspect of the present invention there is provided an apparatus for providing a plasma comprising; a container in which a plasma is provideable, bubble trapping means, arranged within the container, for trapping gas bubbles at a predetermined location in the container and, plasma creation means, in association with the container, for creating a plasma from the gas within the bubbles.

The plasma creation means preferably comprise electrical discharge means which most preferably comprise a cathode and/or an anode.

The apparatus, in one preferred embodiment being an electrolysis cell, further preferably comprises bubble introduction and/or generating means, for introducing and/or generating bubbles in the container.

Furthermore, the apparatus preferably comprises one or more of the following: enhancing means for enhancing plasma formation and one or more non-conductive partitions arranged between the electrodes, whereby the enhancing means preferably comprise bubble trapping means most preferably associated with the electrodes and wherein the enhancing means may also comprise current concentrating means for concentrating the electrical current at a predetermined position in the container which can take the form of one or more channels arranged through one or more of the electrodes.

The electrodes may take any suitable form, for example the electrodes may be so profiled as to entrap/attract bubbles, in order to help gas bubbles being created or introduced to the discharging electrode to form a dielectric barrier by which the voltage can be raised whereby a suitable current density is provided directly by high input of current or passively created by a current concentrating arrangement, for example, by conducting the current through small holes on the electrodes or by reducing the discharge surface area of the electrodes whereby in the latter case, the electrodes may take the form of pins, wires, rods and the like.

For example, the cathode may be formed by a hollow tube with perforated holes therein, e.g. small perforated holes. The holes allow bubbles introduced into the tube to pass out of the tube into the aqueous medium. Alternatively a cathode may be made of wire mesh or have a roughened surface, e.g. to encourage the attachment of bubbles thereto to slow down the movement of the bubbles.

In one embodiment there are a plurality of cathodes spaced apart from each other and in parallel with each other, and a single rod-like anode, e.g. centrally positioned relative to the cathode.

The other electrode (non discharging) preferably has a larger surface area such than the discharging electrode.

The discharging electrode can either be cathode or anode depending on the application necessity.

In an experimental reactor the separating membrane, non-conductive partition, was nylon cleaning cloth having a tight matrix 0.5 mm thick. This semi-permeable membrane is capable of resisting the passage of oxygen and hydrogen ions through it in the aqueous medium, intermediate the anodes and cathodes thereby to maintain separation of oxygen and hydrogen produced in the plasma.

Most preferably, the apparatus according to the present invention is an electrolytic cell.

A known problem with carrying out electrolysis is that any gas/bubble build up in the electrolytic cell creates a barrier to the flow of current through the electrolyte, thereby impeding electrolysis, which increase in resistance in turn forces the required voltage up. As such, electrolytic cells require a great deal of energy and are often very large in order to effect dispersion of such gas/bubbles. However the present invention actively promotes such bubble build up, in order to effect plasma creation which the inventors have shown is effective in carrying out electrolysis.

DETAILED DESCRIPTION OF PREFERRED EMBODIMENTS OF THE INVENTION

A plasma formed in a fluid in accordance with this invention may manifest itself in a variety of forms. It will be convenient to provide a detailed description of embodiments of the invention with reference to the accompanying drawings. The purpose of providing this detailed description is to instruct persons having an interest in the subject matter of the invention how to put the invention into practice. It is to be clearly understood however that the specific nature of this detailed description does not supersede the generality of the preceding statements. In the drawings:

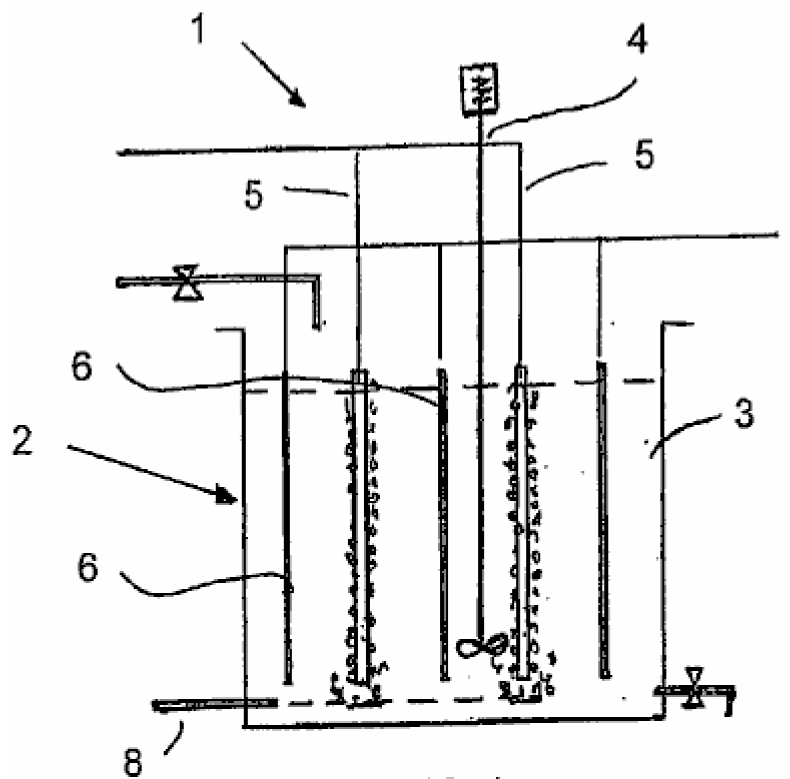

FIG. 1

Fig.1 is a schematic sectional front view of apparatus for carrying out a method in accordance with the invention.

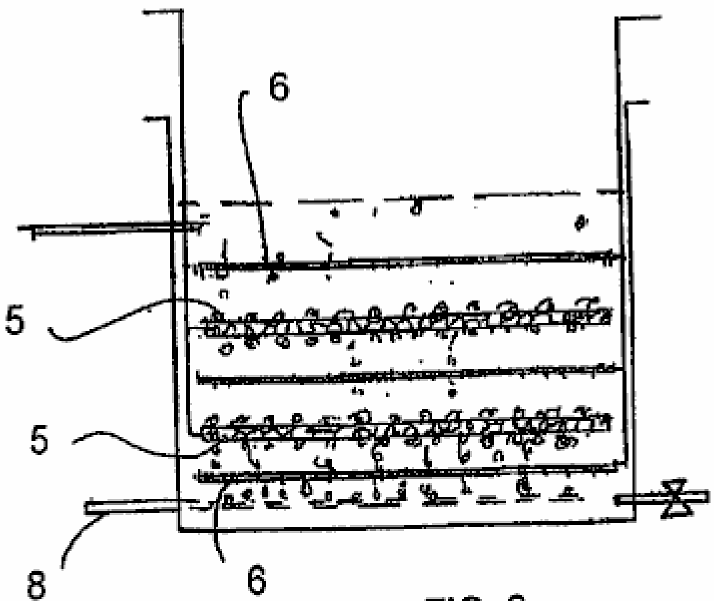

FIG. 2

Fig.2 is a schematic sectional front view of a variation on the apparatus of Fig.1.

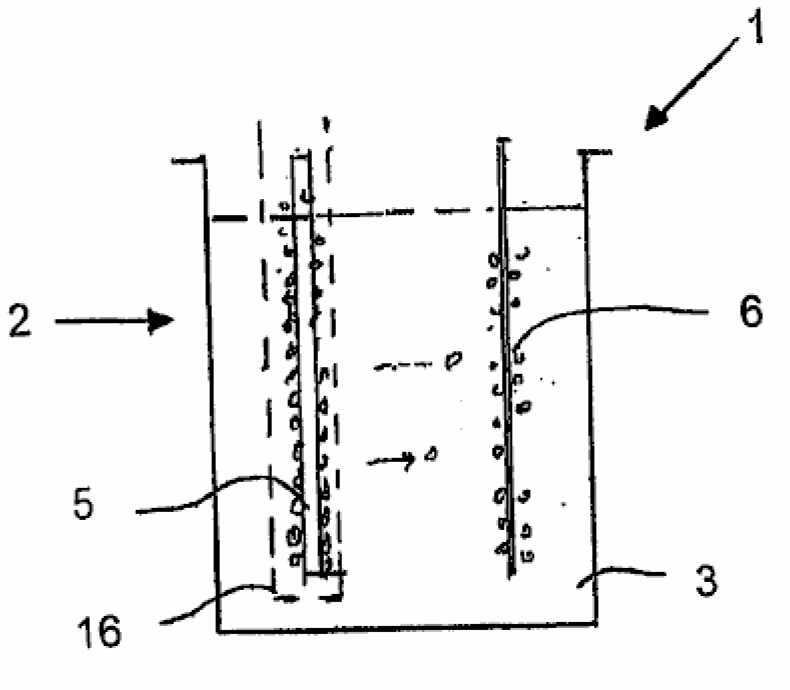

FIG. 3

Fig.3 is a schematic sectional front view of an apparatus in accordance with the invention suitable for producing hydrogen gas.

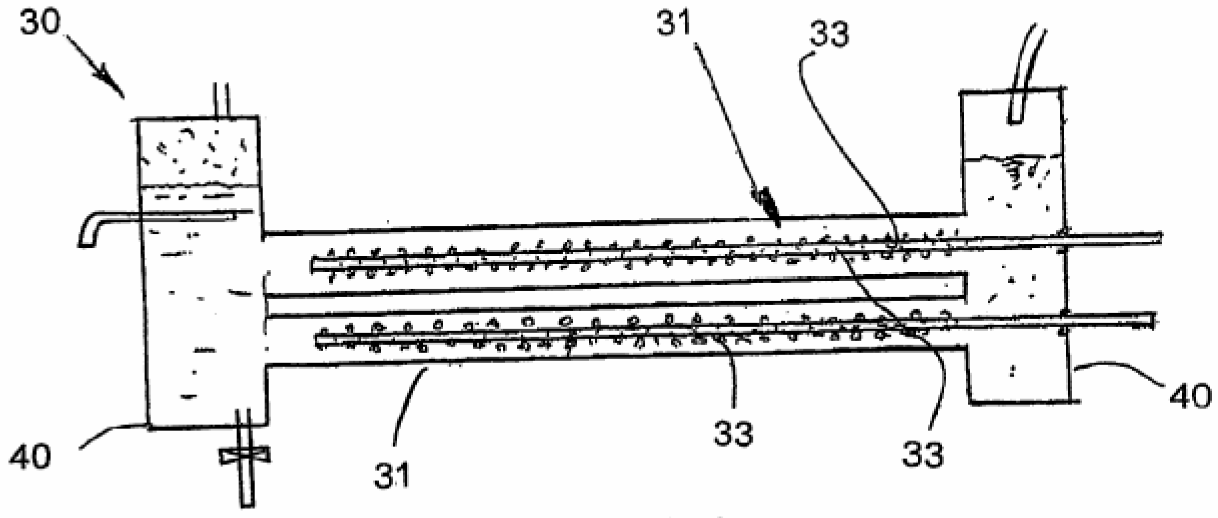

FIG. 4

Fig.4 is a schematic sectional front view of a tubular reactor carrying out a method in accordance with another embodiment of the invention.

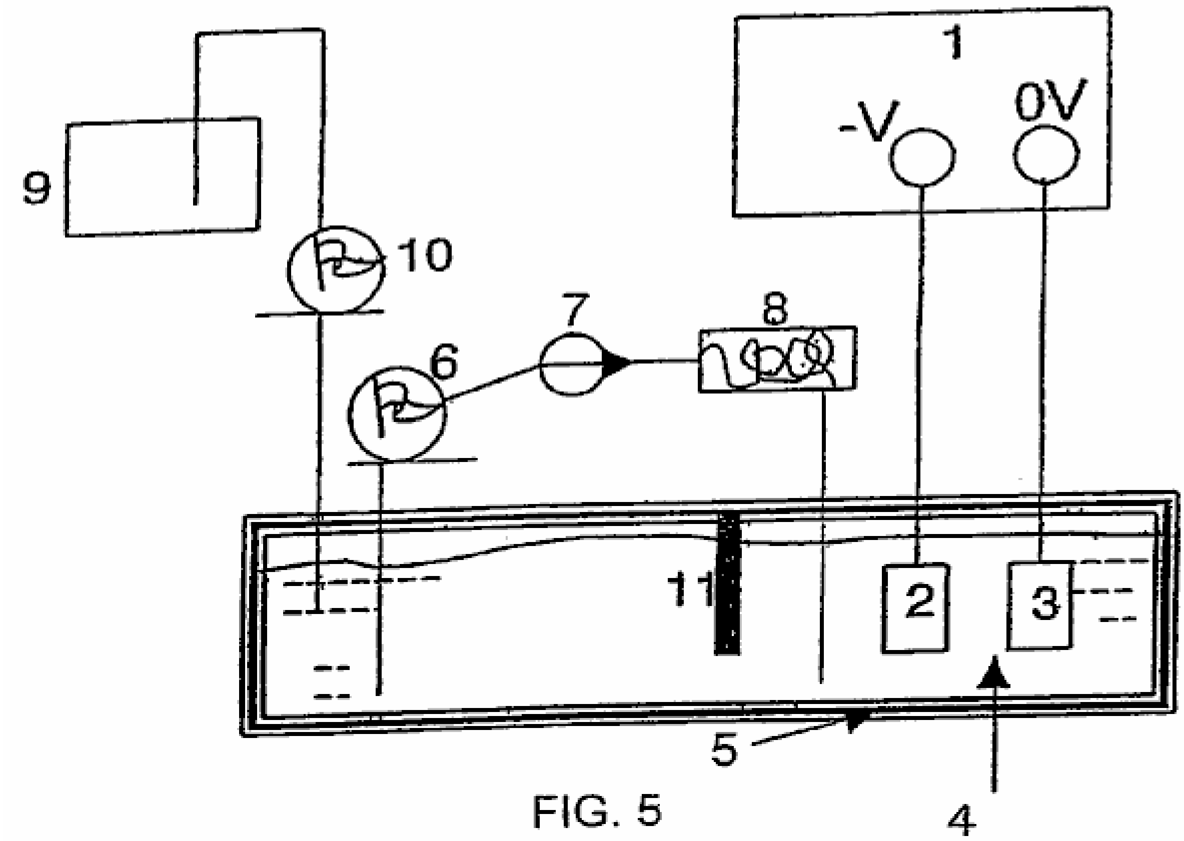

FIG. 5

Fig.5 is a schematic flow sheet of apparatus in the form of a cell for carrying out the invention.

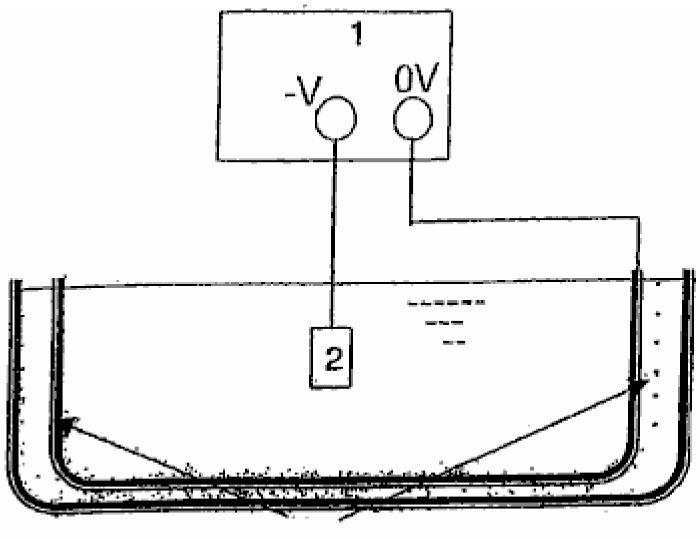

FIG. 6

Fig.6 is a schematic view of a bath for the cell of Fig.5 having an ultrasonic generator for generating bubbles.

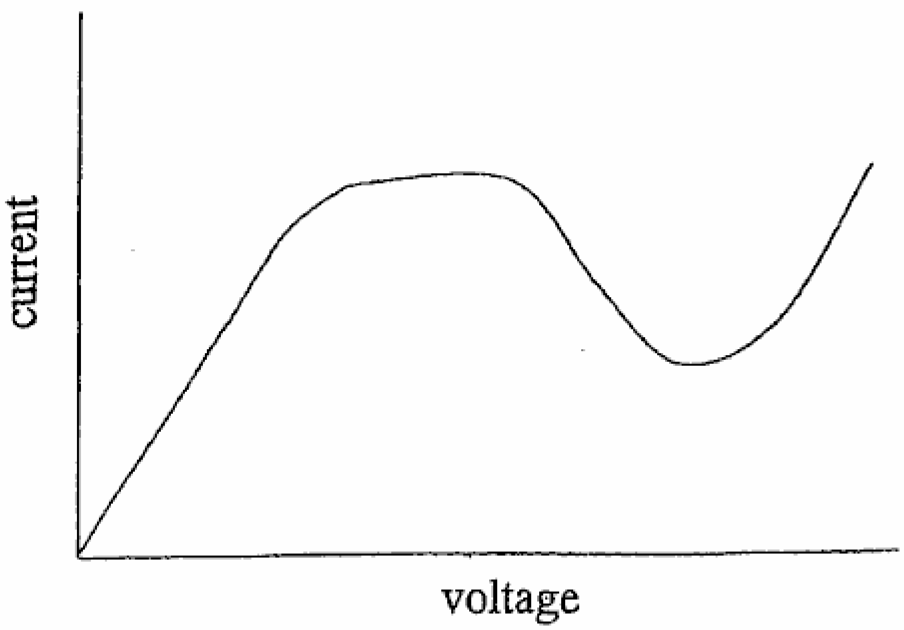

FIG. 7

Fig.7 is a schematic graph of current against voltage in an electrolytic cell.

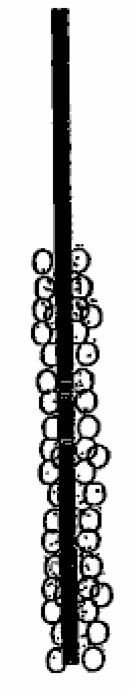

FIG. 8

Fig.8 shows the initial formation of a bubble sheath around the cathode due to the application of voltage across the electrodes.

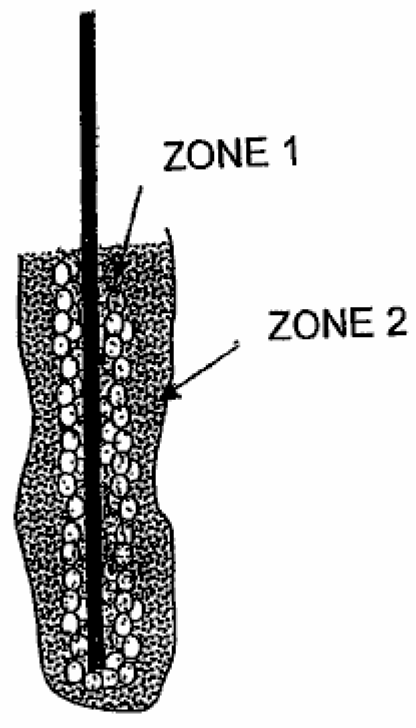

FIG. 9

Fig.9 shows the bubble sheath around the cathode during stable glow discharge within the cell, and

Figs.10-53 refer to further embodiments and experimental results in respect of the present invention.

The present invention relates to the production of non-thermal plasma contained in a liquid by generating corona discharge and or glow plasma discharge inside the bubbles or air pockets present in the liquid.

Upon passing electricity of sufficient potential through the liquid, electric breakdown of the dielectric bubble barrier results in the formation of plasma discharge inside the gas bubbles or pockets present in the liquid. In most cases glow discharge occurs near the electrodes but occasionally glow discharge is also observed away from the electrode.

The bubbles can be produced either by electrolysis, electrochemical reaction, heating of electrodes, releasing of trapped gases in the liquid, ultrasonic cavitations, laser heating, and externally introduced gases.

Bubbles produced by electrolysis of water contain hydrogen gas at the cathode and oxygen gas at the anode. Such bubbles can also contain other chemical vapours originating from the electrolyte or additives.

The liquid serves as an electrolyte which provides conductivity of electricity, the source material from which gases and vapour are produced for plasma dissociation to form, for example, reduction and oxidation, radicals and neutral species. The liquid also provides an active catalytic chemical environment for forming new compounds. It also serves as containment of gases in the form of bubbles or air pockets in which the non-thermal plasma discharge takes place.

In practise, gas bubbles evolving and shrouding the electrodes during electrolysis create a dielectric barrier which inhibits the flow of current.

At the same time the dissolved gas or micro bubbles spread and diffuse in the liquid volume create a high percentage of void fractions (micro gas bubbles) which also increase the electric resistance and so raise the voltage across the liquid medium.

When the voltage between two electrodes reaches a critical level, the gas trapped inside the bubbles undergoes non-equilibrium plasma transformation. This is also known as electric breakdown which enables the resumption of current flow through the bubble sheath or air pocket layer. In the case of water electrolysis, the production of hydrogen will then resume.

During plasma discharge, light emission may be observed in the bubbles in a sporadic or steady manner in short and continuous flashes near the surface of the electrodes and in the liquid medium.

Continuous light spots may also be observed in areas distanced from the electrodes where suspected small air bubbles are trapped and yet remain under the influence of strong electrical field.

The temperature in the electrolyte near the electrodes has been measured to be in the region of 50^{O}C to about 90^{O}C with an experiment running in water for 30 minutes, which indicates that the plasma is non-thermal plasma.

The temperature variation may be influenced by electrode geometry, electrolyte concentration, level of inception voltage and current density for the glow discharge. The temperature measured directly over the discharging electrode can reach over 200^{O}C during reformation of methanol for example.

Configurations of electrodes, size, spacing, dielectric barrier coating, electrolyte temperature, current density, voltage and reactor geometry are factors influencing plasma formation.

A special structure and arrangement to retain gas or gas bubbles close to the electrodes provide favourable circumstances for the ready formation of a steady and cyclical plasma glow discharge with lower voltage and current input.

Electrode configurations can be in following forms: plate to plate, plate to pinned plate, dielectric coated plate to plate or pinned plate or both, wire mesh to plate, wire mesh to wire mesh or to perforated plate, wire or groups of wires in perforated cylinder tube, and tube in tube.

The electrode material may be sponge porous metal electrode, electrode covered with honeycomb non-conductive materials and porous ceramic filter to entrench gas or using non-conductive plate with drilled holes and gas traps that retain gas bubbles and concentrate the current density next to the electrode surface.

In general keeping the bubbles close to the surface of the electrodes can also be achieved by attaching a porous non-conductive nylon foam mattress and/or a honeycomb or porous ceramics slab of suitable thickness, so that the mobility of the bubbles is slowed down and at the same time the conduit for current flow is narrowed by a shading effect of the dielectric materials which in turn raises the current density locally.

For the same reason glass beads, plastic beads and beads of catalytic material i.e. TiO_2, graphite of suitable size can be placed between the electrodes in order to slow down the flow of bubbles.

A non-conductive, heat and corrosion electrode covering material, structured to retain and trap gas bubbles which also concentrates current density through small openings arranged through it whilst providing an adequate exposed electrode surface for electro-chemical and electrolysis reactions, improves the generation of steady and short cyclical reactions under-liquid plasma discharge.

Multiple layers of very fine stainless mesh, sandwiched between two plastic cover plates with small perforated holes, have produced a steady glow plasma. The void space created by the layered wire mesh provides a trap for air bubbles as well as enlarging the contact surface for electrochemical and electrolysis reaction.

In an experiment both vertical or horizontal electrodes were covered and bonded with non-conductive materials (plastic) with patterned perforations to trap gas bubbles while at the same time allowing for electrical contact of the electrodes through the perforations.

The electrode contact surface was enlarged underneath the shielding to increase gas production during electrolysis or heating. Current flow was concentrated through small holes of 1 to 3 mm leading to the trapped gas and bubbles, which underwent plasma transformation. Cyclical and steady plasma was observed with an input DC voltage ranging from 350V to 1900V and current ranging from 50 mA to 800 mA.

A non-conductive diaphragm, which does not restrict the free flow of ions and electrolyte, is placed between two opposite electrodes to prevent crossing of bubbles between two half electrolytic cells avoids re-mixing of the gases which have been separated by electrolysis.

A reactor may be so structured that the electrolyte is able to enter into the reactor through the separating membrane or opening form in the reactor to replenish the loss of electrolyte within the enclosed reactor.

There are other techniques which can be incorporated into the proposed invention for the enhancement of plasma generation such as pulsed power supply, RF power, microwaves, ultrasonic waves, magnetron field, and laser. Some of the above techniques may also be applied in pulsed form.

Ultrasonic cavitations in liquid (sonic-technology) will enhance the plasma formation and the catalytic reactions that benefit a number of under-liquid plasma applications.

The under-liquid plasma requires an input of DC or AC voltage in the range from 350V up to 3000V and current density ranging from 1 Amp to 3 Amp per cm^2 in dealing with a large range of liquid media. The specific voltage and current requirement for a given application depends very much on the chemical and physical properties of electrolytic liquid as well as those factors mentioned above.

The under-liquid plasma method according to the current invention, can operate at atmospheric pressure and ambient temperature. However, an external pressure less than one atmosphere or over one atmosphere with higher temperatures does not deter the generation of plasma in the bubbles. A higher temperature in the liquid also means more active gas molecules within the bubbles, which can benefit plasma formation.

Non-thermal plasma generated in a liquid according to the present invention, has advantages over known types of plasma discharge, for example in gas, under water plasma arc and pulse power electric discharge, these being:

> It requires only simple electrolytic cells to be the reactor to perform such discharge. There is little erosion to the electrodes and wider range of electrode materials can be chosen such as stainless steel, graphite, aluminium and good conductive materials which are resistance to chemical erosion. The polarity of the electrode can be reverted if necessary to compensate the lost of electrode materials if so desired.
>
> It works under one atmospheric pressure and ambient temperature. The liquid electrolyte will be primary source of materials for the chemical and physical reaction take part in the process. There are number of ways that bubbles can be produced within the electrolytic cell. Gas can also be introduced to the reactor where plasma catalytic and dissociation is taking place.
>
> It is a low-temperature system as the plasma discharge is non-thermal. Any excessive or undesirable high temperature can be lowered by increasing the circulation rate of the liquid which can lose its temperature through heat exchange. Heat generated can be recovered as secondary energy.

The electrolyte (liquid) will serve as extension of the conducting electrodes in contact with the gases or vapour trapped inside the bubbles. The air gap between two electrodes is reduced to the thickness of the gas bubbles or air pocket which thus enables plasma discharge at a much lower voltage and current compared with other plasma discharge systems. Plasma glow discharge, according to the present invention, can be initiated under conditions of a voltage as low as 350V and the current ranging from 50 mA to 800 mA. Extra energy is not required in splitting the water molecules to transient bubbles as in the other underwater electrical discharge system which requires voltage not less than 5 to 6 KV, and very high current over 200 A in pulsed supply. Plasma discharge will also take place in gas pockets or bubbles away from the electrode as long as the electric field strength is sufficient to cause such discharge.

The electrolyte also serves as a confinement of gas generated within the system, or purposely introduced gas of known properties, instead of ordinary air which may lead to production of unwanted NOx for example. Noble gas such as argon is not necessary to enhance the initiation of glow discharge sometime required in the air discharge system.

The electrolyte also serves as a conductor and passage for the transportation of ionised species and transmission of electrons. The ionised atoms and molecules deriving from the electrolyte will be collected in their respective electrodes in the form of gas or material deposit. These ionised species are either serving as a reduction or oxidation agent in their respective half-cell. Since the gas ions produced during the discharge migrate to their respective poles to be collected individually, hydrogen gas and oxygen gas can be collected separately.

The gas and vapour molecules and atoms inside the bubble which undergo plasma glow discharge are ionised, excited or dissociated to produce the very active species for reduction, oxidation, and the forming of neutral or radical species which in turn react with the chemical elements present in the gas and liquid interface aligning bubbles wall. The large number of bubbles generated near the electrodes and in the nearby liquid, come into contact with a much larger volume of liquid nad so provides effective treatment, breakdown, transformation of chemicals, organic matter or elements which have been targeted.

Liquid is a good medium for transmitting ultrasonic waves. Sonic-excitation is beneficial for the dissociation of materials and extermination of microbes and it aids the breakdown and local melting of colloidal solids during impact which also enhances the plasma oxide reduction process. The generated ultrasonic cavitations may be fully utilised to work in conjunction with the under-liquid plasma discharge. An ultrasonic cavity is micro in size and uniformly distributed in the entire liquid volume. The cavities are a high vacuum which contain liquid vapour and gas, and these favour plasma discharge. The high temperature and pressure reaching $10{,}000^{O}K$ and a thousand times atmospheric pressure, produced on the collapsing phase of these cavities work is complementary to that of the electro discharge plasma. This enables under-liquid plasma discharge to spread further from the electrodes and be well distributed in the liquid volume which increases its overall effectiveness.

The electrolyte may also be in the form of a mixture, an emulsified liquid, a colloid, or foams encapsulating gas emissions either coming from the liquid or introduced externally. The emulsified liquid of an oil/water mixture and encapsulating gas of hydrocarbon fuel with the ultrasonic irradiation, will facilitate their reformation for hydrogen production.

Fine granular insoluble particles of mineral oxide such as aluminium, titanium, iron, silica etc. can be suspended in the form of colloid with the liquid which is than subjected to reduction with active ionic hydrogen atoms in a highly reactive plasma catalytic environment to become deoxidised and refined. This will be more so, with the assistance of sonic impedance. The Plasma glow discharge has also demonstrated the ability to dissociate soluble ionic metal compounds, whereby subsequently the positively charged metal ions will be segregated near the cathode electrode in the form of precipitation and plasma electroplating deposition.

The electrolyte may be a source of materials for thin-film deposition with the assistance of plasma glow discharge. In addition, nano size particles of certain compounds and elements i.e. metal hydride, oxide, pure metals, semi metals, organic, ceramic etc. can also be produced with the assistance of the under-liquid plasma discharge in conjunction with the ultrasonic cavitations mechanism, to cause breakdown and reformation of certain compounds. The highly catalytic, reactive and dissociation capacity of the glow discharge plasma, reforms and reconstitutes chemical elements and compounds from basic atoms or molecules to form nano particles. These include organic, inorganic, metallic and non-metallic materials such as silica, titanium carbon etc. This is also a very effective way to extract or remove heavy metals from a liquid by oxidising such as Hg to HgO; Cu, Zn, Cr etc. to form hydroxide precipitation and ionic metal solute to be deposited by the plasma electroplating process.

The under-liquid plasma creates a highly catalytic and reactive environment for chemical reactions which would not take place under normal circumstances. The reductive species i.e. H+ and oxidative radicals i.e. O-, O_3, H_2O_2, OH- and other radical species produced in the electrolysis and plasma dissociation derived from the liquid itself. The sonic excitation action which enhances the effectiveness of plasma discharge can only be conducted spontaneously under and within liquid.

The under-liquid plasma technique, coupled with the sonic-excitation and electro-chemical action, creates an environment of localised high temperature up to 10,000^{O}K and pressure up to thousands of atmospheres which favour the generation of cold-fusion phenomena.

It is a low-energy system. Generally high voltage from 0.35 KV up to 3 KV with low current density rarely required more than 3 Amp/cm^2 will be needed to deal with a vast number of different types of the under-liquid plasma process. If other enhancement method is applied, the high voltage and current requirement will be further reduced.

It is a method for producing hydrogen, oxygen with water or other gases and material deposition with liquid containing chemical solute, other than the conventional exchange of ions. The molecules and atoms are being ionised, excited and subjected to dissociation to form ionised, radicals and neutral species by the influence of plasma discharge. The dissociated species can be produced near either anode or cathode electrodes. The ionised species are then attracted to their respective polarity to be neutralised to produce gas or deposition of materials. The dissociation of atoms or molecules are the result of electron collisions and a wide variety of dissociated species is produced which creates the reactive elements for reduction, oxidation, and highly catalytic environments that facilitate chemical reaction of those relatively stable compounds and elements.

No chemicals are needed as an additive in a decontamination process, of which chemicals, i.e. chlorine and ozone, could become a secondary source of pollution.

EXPERIMENTAL OBSERVATIONS

When sufficient micro bubbles originating from the electrode surface block the current flow, the voltage rises steadily until a point of voltage inception is reached whereby some micro bubbles begin experiencing glow discharge. This precedes an avalanche effect which spreads through other micro bubbles close by.

A massive light is then emitted in a flash with a sound of bursting bubbles. The light is yellow to orange in colour indicating plasma discharge in hydrogen gas at the cathode electrode. Soon after switching on the reactor, temperature in the electrode rises which contributes to the formation of vapour bubbles which in turn creates a large bubble environment full of water vapour whereby the next succession of plasma discharge takes place within a fraction of a second.

The features which enable the trapping of gas, the concentration of current density within a small region, and the continued replenishment of gas, are steady and a self-regulating voltage and current power supply, electrode spacing, electrode configuration and electrolyte concentration, all of which have a bearing on generating desirable steady, and short cycle plasma glow discharges.

The invention has a number of applications including:

Plasma assisted electrolysis for hydrogen generation.
Non-thermal plasma reformation of hydrocarbon and hydrogen rich compounds for the production of hydrogen.
Treatment of polluted and contaminated liquid waste containing chemical and heavy metal pollutants.
Treatment of polluted gas emission and removal of odours.
Sterilisation of drinking water and liquid foods.
Extraction and refinement of mineral from its oxide or oxide ores.
Production of nano particles.
Enhancement of a material's chemical and physical properties by plasma discharge irradiation in under- liquid conditions. This also favours the need of any plasma reaction and treatment under-liquid.

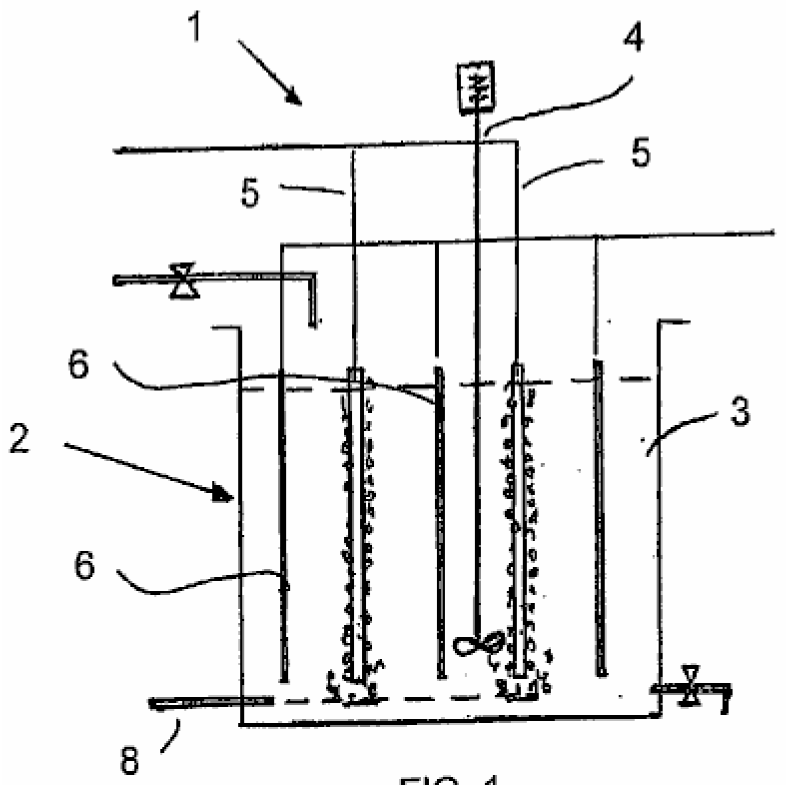

FIG. 1

Fig.1 illustrates a basic apparatus **1** for carrying out the method of the invention, namely, generating a plasma within bubbles formed adjacent to a cathode within an aqueous medium. The apparatus **1** comprises a liquid containment means in the form of an open rectangular tank **2** opening to the atmosphere and containing an aqueous liquid **3**. A stirrer **4** for agitating the aqueous liquids in the tank **2**.

Two spaced cathodes **5** are positioned in the tank **2** alternating with three anodes **6** projecting into the tank **2** and extending generally parallel to the cathodes **5**. A bubble pipe **8** is positioned at the bottom of the tank **2** for introducing bubbles into the aqueous medium in proximity to each of the cathodes **5**.

The application of a suitable potential difference across the anodes and cathodes leads to a glow discharge being formed and a plasma within the bubbles adjacent the cathode. This ionises the atoms and/or molecules within the bubbles and can be used to achieve a number of industrially and commercially useful objectives. For example, it can be used to generate hydrogen gas, one of its uses includes placement in a fuel cell to generate electricity. It can also be used to neutralise harmful compounds within the aqueous medium, e.g. originating in a liquid source or a contaminated gas and treating these harmful compounds. Finally, it can also be used to coat the surface of an article with a particular material.

Each of the cathodes is in the form of a perforated tube. At least one end of the tube is open and typically gas is introduced through such an open end. The side wall of the tube is perforated such that gas issues from the tube into the aqueous medium around the cathode. Alternatively, each of the anodes may be rod-like.

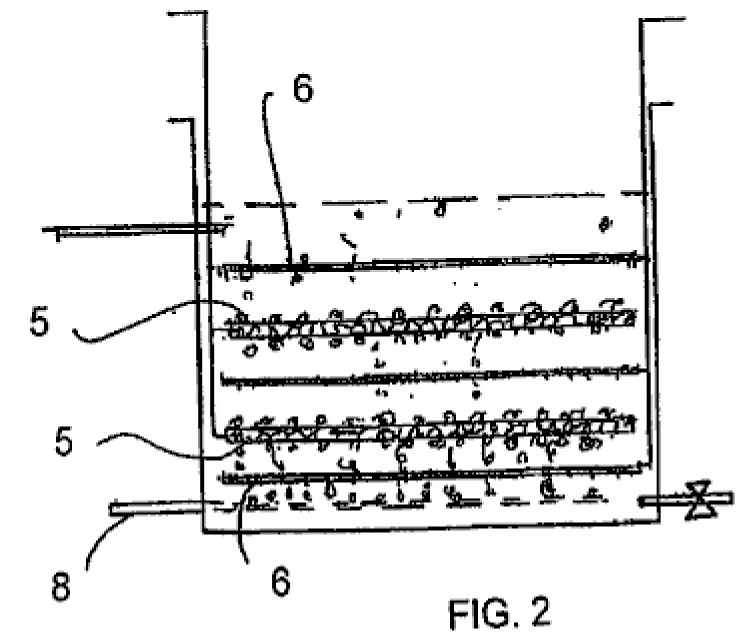

FIG. 2

Fig.2 illustrates a variation on the apparatus of **Fig.1**. This description will be confined to the difference between the **Fig,1** and **Fig.2** apparatuses. In **Fig.2** the electrodes extend horizontally with each cathode positioned between two vertically spaced anodes.

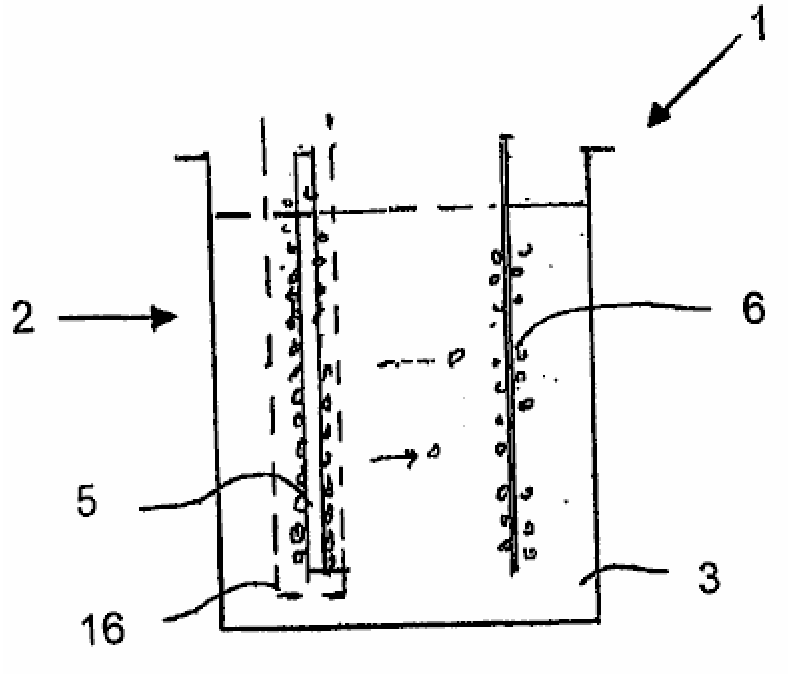

FIG. 3

Fig.3 illustrates an apparatus suitable for the generation of hydrogen. The tank contains an anode and a cathode spaced apart from each other. The electrodes are generally the same as those described above with reference to **Fig.1**. The cathode is surrounded by a semi-permeable membrane. Specifically the membrane is designed to resist the passage of hydrogen and oxygen bubbles through it. Hydrogen gas is formed from the combining the two neutralised hydrogen ions adjacent to the cathode and then is drawn off from the aqueous medium above the cathode and collected for use.

Similarly, oxygen gas is formed adjacent to the anode and this is also drawn off separately and collected for use. An advantage of this method for the formation of hydrogen fuel is that it consumes essentially less energy than other known methods, and as a result, will be a very attractive source of hydrogen for use in fuel cells.

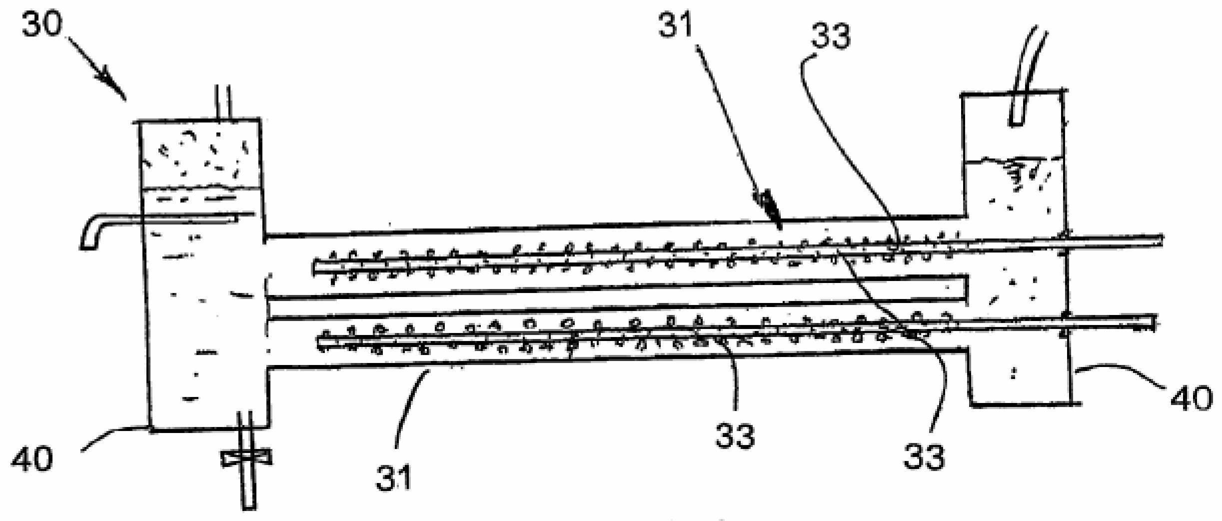

FIG. 4

Fig.4 illustrates a tubular reactor which is quite different to the tank **2** shown in the previous embodiment. The reactor **30** comprises a circular cylindrical body **31** with its longitudinal axis extending horizontally. A pair of electrodes **32**, **33** extend longitudinally through the body, spaced in from the wall of the body **31**. Each cathode **33** is formed by a perforated tube. By contrast, the anode is formed by the body **31**. Thus the single anode **31** extends concentrically around the cathodes **33**, positioned radially inwards from them. A gas, which ultimately forms the bubbles, is pumped into the cathodes, e.g. through their open ends, and then issues through the openings along the length of the cathodes **33**.

Settling tanks are located at each end of the body **31**. The settling tanks **40** permit gas to be separated from the liquid. The gas rises to the top of the tanks **40** from where it can be drawn off. The aqueous liquid can be drawn off through a drain point positioned below this level of aqueous medium in the tank **40**. An aqueous medium can also be introduced into the apparatus, by passing it through an inlet into one of the tanks **40**. Otherwise, the method of generating plasma in bubbles adjacent to the cathodes is very similar to that described above with reference to **Fig.1** to **Fig.3**.

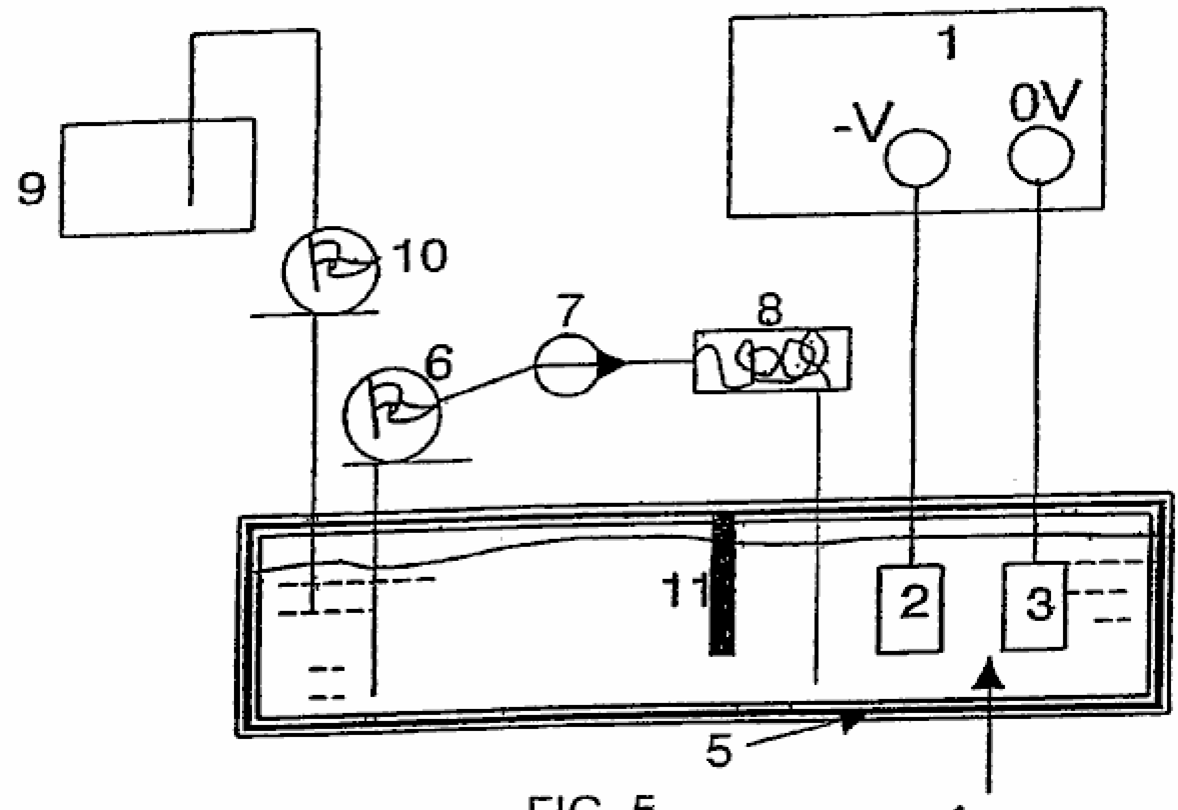

FIG. 5

In **Fig.5**, reference number **1** refers generally to apparatus in the form of a cell and associated components for carrying out a plasma electroplating process (PEP) in accordance with the invention. The cell **1** comprises broadly, a liquid container in the form of a bath which is filled with an electrolyte which also forms part of the apparatus or cell. A pair of spaced electrodes are positioned in the bath, one being a cathode and the other being an anode. An electrical circuit is formed by electrically connecting up the anode and cathode to a power supply, e.g. a mains power supply. When the bath is being used, a potential difference is applied across the electrodes. A partition divides the bath into an electrode compartment and a circulating compartment. Electrolyte is drawn off the circulating compartment and pumped through a heat exchanger to cool it and then return it to the bath. This helps to keep the temperature of the electrolyte within a suitable range during operation. In addition a make-up tank is positioned adjacent the circulating compartment to replenish the level of electrolyte within the bath as and when required.

The apparatus also includes the means for producing a bubble sheath around the cathode. The bubbles can be generated by gas evolved at the cathode as a result of a cathodic electrochemical reaction. This is one of the ways in which the bubbles were generated in the experiments conducted by the applicant. There are however, alternative ways of generating the bubbles for the bubble sheath. One alternative way, is by boiling the solution (ebullition bubbles). Other ways of producing the bubbles are by cavitation generated by ultrasonic waves or by hydrodynamic flow. Entrainment bubbles can also be produced by a mixture of gas and liquids.

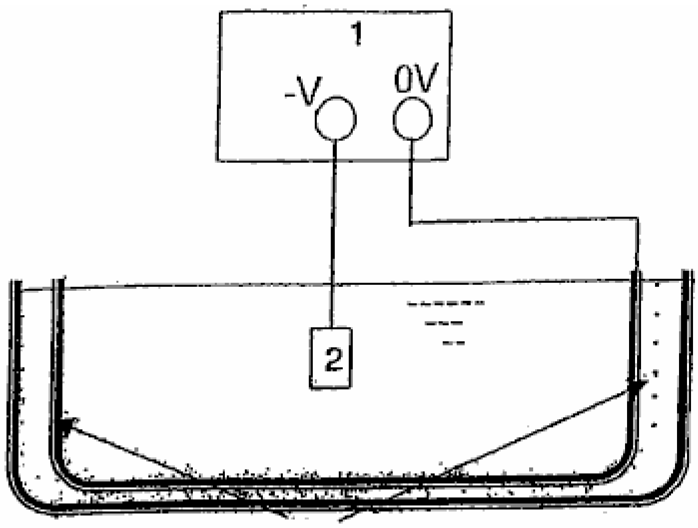

FIG. 6

Fig.6 illustrates an ultrasonic generator surrounding a bath similar to that in **Fig.5**. The generator generates ultrasonic waves which are transmitted into the electrolyte liquid and act to generate bubbles in the electrolyte which then surround the cathode. The cathode, which typically provides the surface for deposition, can be formed of a conductive material, a semi-conductive material or a non-conductive material, coated with a conductive coating. Cathodic materials that have been successfully used in this method are nickel, mild steel, stainless steel, tungsten and aluminium. The cathode can be in the form of either a plate, a mesh, a rod or wire. There may be any number of cathodes and the cathodes can be any shape or size. Any conductive material can be used for the anodes. Graphite, aluminium and stainless steel have all been successfully used to practise this method by the applicant. Generally, aluminium is preferred for the anodes. There may be any number of anodes and the anodes can be any shape.

In use, the bath is filled with an appropriate electrolyte. Broadly speaking, the electrolyte contains a solvent or carrier which provides a liquid environment, within which, electrolysis can occur and which also provides a support for plasma generation in the sense that it provides containment for the plasma generation. The electrolyte also contains a source of the material to be deposited in the form of a precursor. The electrolyte may also include additives for example for enhancing the electrical conductivity of the electrolyte and for assisting in bubble formation and a buffer to maintain a suitable pH in the cell.

In use, the article to be coated is placed in the bath where it typically forms the cathode. In some instances however, it may also form the anode. A voltage or potential difference is then applied across the electrodes and this voltage is set at a level that is higher than the firing point at which the system or cell achieves a stable glow discharge in which glow clusters envelope the cathode surface.

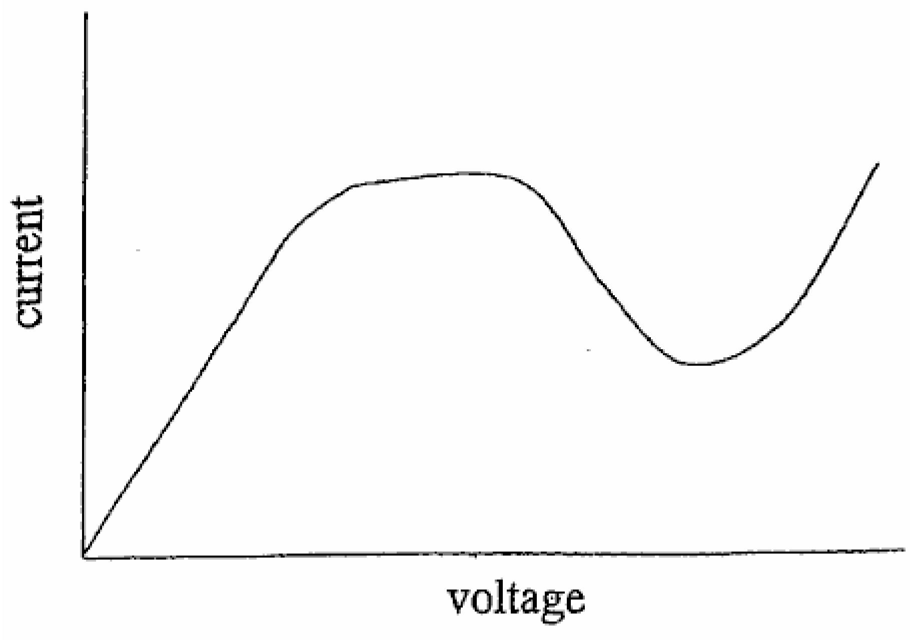

FIG. 7

Fig.7 illustrates a typical current against voltage profile for such a cell as the voltage is progressively increased. Initially there is an ohmic zone where the current increases proportionally with the voltage. After that the curve enters an oscillation zone where the current starts to oscillate. Applicant believes that this condition may be due to the fact that bubbles are evolving out of the solution and partly obscuring the electrodes. The bubbles form plasma, grow and then burst forming a shield shrouding the electrode. These bubbles block the conducting part of the cathode and this might lead to a decrease in apparent current density.

At the cathode, the evolved bubbles include hydrogen generated by the electrolysis of water in the electrolyte and by evaporation of liquid within the electrolyte. The bubbles may also be generated by other means as described above, for example ultrasonic generation. After some time, the number and density of bubbles increases until the entire cathode surface is sheathed in bubbles. At a critical voltage that is constant for a given system, known as the fire point, a glow discharge is formed. Experimental observation shows that this occurs when there is a near continuous bubble sheath around the cathode.

With a wire cathode, a tiny fireball or cluster of fireballs usually appears at the tip of the wire at the fire point. With further increases in voltage a glow discharge is established across the entire cathode. The glow discharge is dynamic and usually shows evidence of glow clusters and/or flashing through the bubble region. The glow discharge is caused by a dielectric breakdown in the bubbles. This is caused mainly by a high electrical field strength. Due to the presence of the bubbles the majority of the voltage drop from the anode to the cathode occurs in the near cathode region occupied by the bubbles. The electric field strength in this region may be of the order of 10,000 to 100,000 V/m. The voltage is set at a setting of 50 to 100 volts higher than the ignition point. This may typically mean a setting of 250 to 1500 volts. A preferred voltage setting would be at the low point of the graph in **Fig.4** within the glow discharge region.

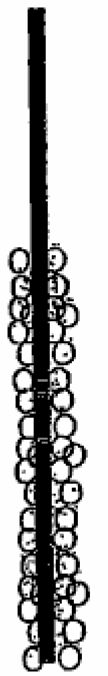

FIG. 8

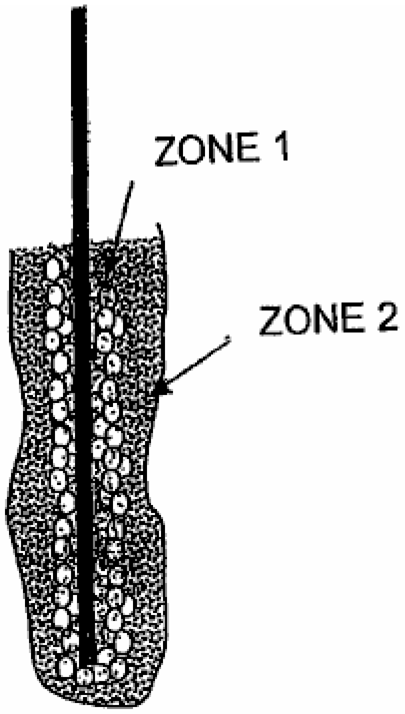

FIG. 9

The glow discharge causes the generation of a plasma in the bubble. **Fig.8** shows the formation of a bubble sheath around the cathode. **Fig.9** shows the cathode during stable glow discharge. As shown in the drawings, applicant has observed the formation of two distinct zones during stable glow discharge. In zone 1 where the glow discharge clusters are present, there is a plasma envelope that directly shrouds the cathode surface. This envelope is where plasma deposition takes place. The plasma interacts with the cathode surface in a process similar to ion plating and deposition occurs. A film is progressively formed through nucleation and growth on the cathode surface. Zone 2 is a plasma-chemical reaction zone, which forms the interface between the electrolyte and zone 1. This zone envelopes the plasma deposition zone and is often clearly visible as a separate region with a milky appearance.

Dissociation, and possibly also ionisation of the electrolyte components, including the precursor, occur in the outer zone, zone 2. This gives rise to the species that are deposited on the cathode. The species is transferred from the outer zone 2 to the inner zone 1 by the electric field strength, diffusion, and convection. Deposition on the cathode then occurs for as long as these conditions are maintained and the precursor material is available in the electrolyte. After the glow discharge commences the temperature of the electrodes increases in a short space of time. The temperature of the electrolyte must be maintained within acceptable limits for certain type of application. To do this, electrolyte is drawn off from the bath and pumped through a cooling system as shown in **Fig.5**. The cooled electrolyte is then re-introduced into the bath. This cooling is required for both stability and safety reasons. Some of the electrolyte components are flammable. In addition electrolyte is consumed during the deposition reaction. Accordingly, it is necessary to top up the bath with additional electrolyte from time to time. A replenishment tank containing electrolytes is provided to perform this purpose.

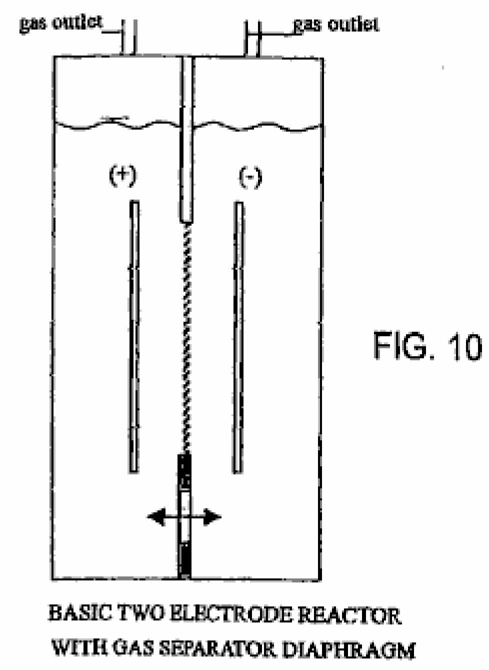

FIG. 10

BASIC TWO ELECTRODE REACTOR
WITH GAS SEPARATOR DIAPHRAGM

As shown in **Fig.10**, the reactor may include a pair of metal electrodes spaced apart and separated by an ion-conducting diaphragm. The electrodes can also be positioned horizontally or vertically.

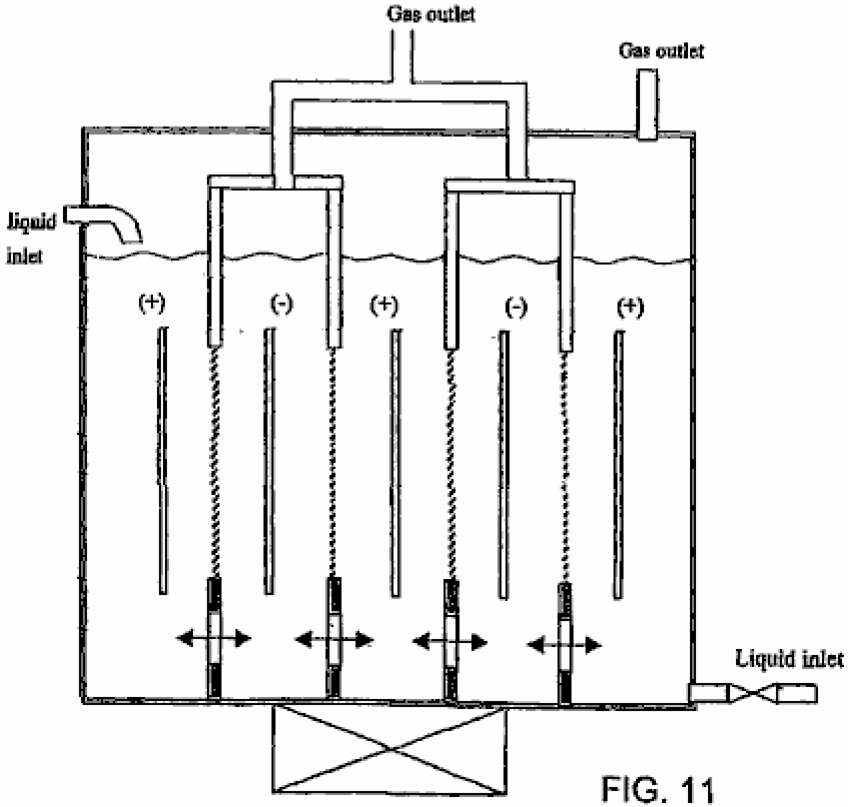

FIG. 11

Multiple Cell Reactors with common bath

As shown in **Fig.11**, the reactor may also include multiple pairs of alternating anodes and cathodes with a diaphragm. The diaphragm can be removed for decontamination and partial oxidation reformation process (**Fig.12**). In the case of reduction process, the hydrogen atoms produced on the side of cathode electrode are kept well separated from mixing back with oxygen by a diaphragm (**Fig.13**). It is possible to increase the throughput capacity of the reactor in treating contaminants with transverse flow through multitudes of alternating electrodes of anode and cathode (**Fig.14**). Wires or rods in tube reactors are suitable to adopt for hydrogen production and reduction process with the metal oxide confined within the narrow space within the cathode half cell and subjecting it to ultrasonic irradiation (**Fig.15** and **Fig.16**).

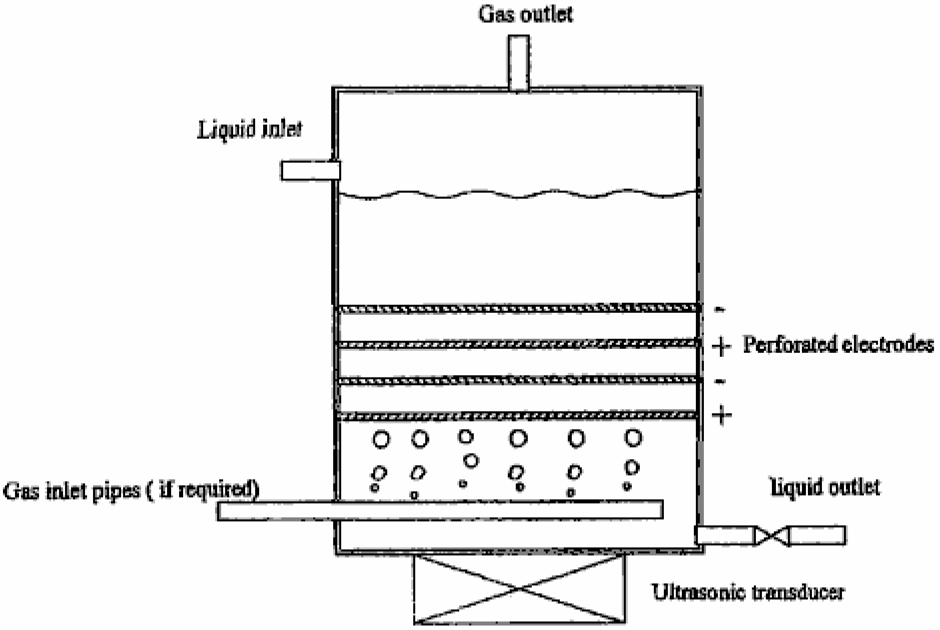

FIG. 12

Tower Reactor with Perforated Electrodes

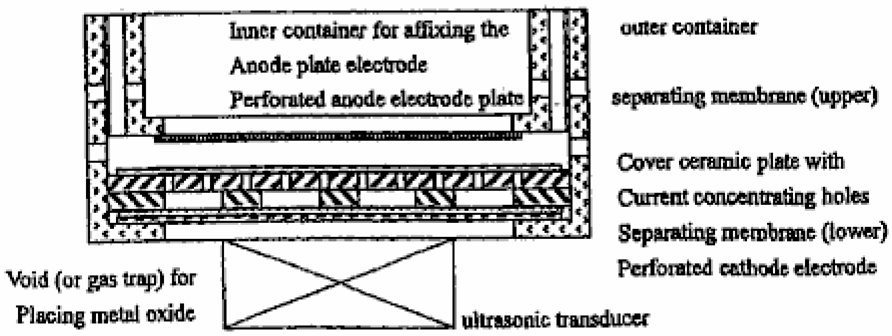

FIG. 13

Reactor for Metal Oxide Reducing Process
(which is to be placed inside an electrolytic bath)

FIG. 14

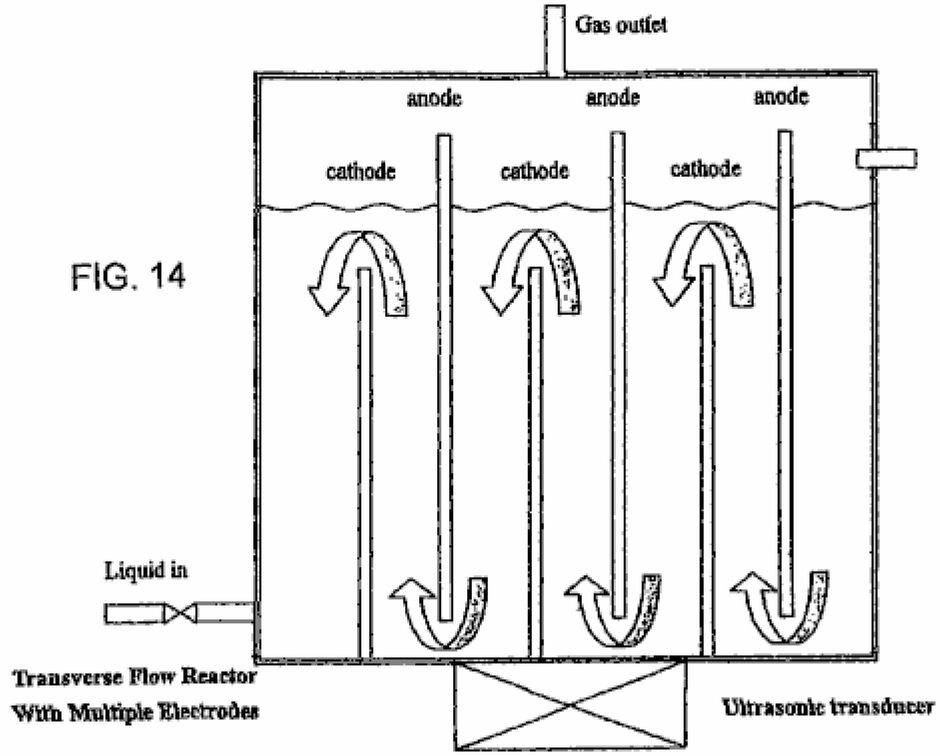

**Transverse Flow Reactor
With Multiple Electrodes**

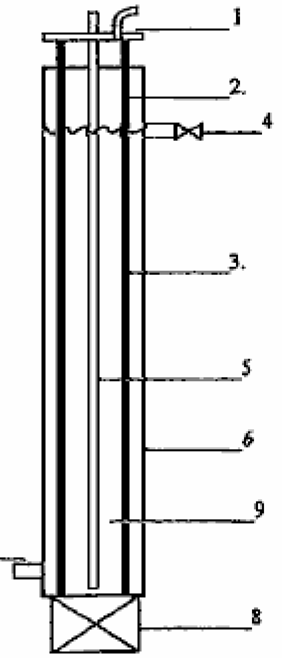

FIG. 15

WIRES OR RODE IN TUBE REACTOR
THE OUTER ELECTRODE SERVING AS BATH

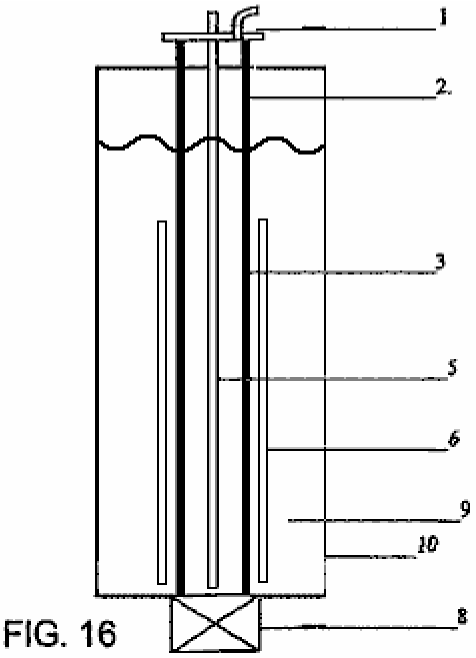

FIG. 16

WIRES OR RODE IN TUBE REACTOR

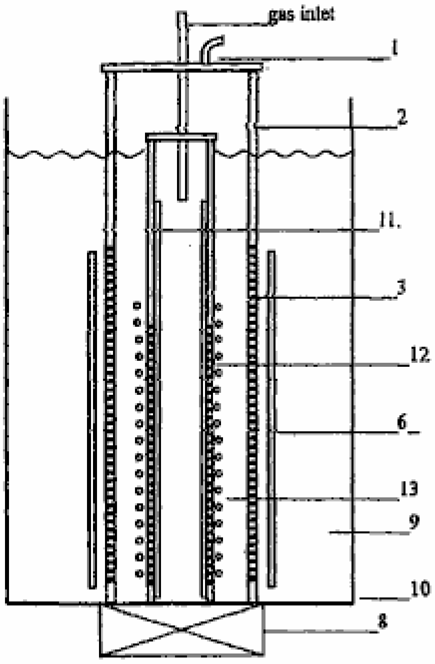

FIG. 17

TUBE IN TUBE REACTOR WITH PERFORATED INNER
TUBE COVERED WITH GAS-TRAPPING COVER LAYER

Tube in tube reactor (**Fig.17**) has a tube electrode within the outer tube electrode instead of wire or rod. The inner tube is covered with non-conductive materials of suitable thickness with small diameter holes and gas trap forming in between the inner metal tube which also have small holes formed correspondingly. The gap between the outer electrode and inner electrode is kept close but giving a minimum 3 mm to 5 mm space between the separation diaphragm and the dielectric cover of the inner electrode, to allow free flow of electrolyte and gas. Bubbles of gas will be discharged into the plasma discharging zone with hydrocarbon rich gas i.e. methane, natural gas, H_2S to undergo reformation for the production of hydrogen gas. It can also be adopted for decontamination of polluted gas laden with NOx, SOx and particulates; and reduction process where the metal oxide will flow through the space between the electrodes with the ultrasonic irradiation keeping the fine powder in colloidal and at the same time hydrogen gas or methane gas may also bubble in to provide the extra H_2, H+ and CO to enhance the reduction process.

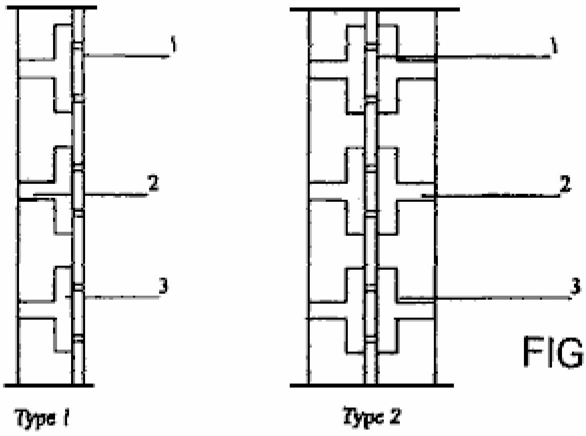

Configuration of Electrode with Gas Trapping and Current Concentrating Cover Arrangements

FIG. 18A

Type 1

FIG. 18B

Type 2

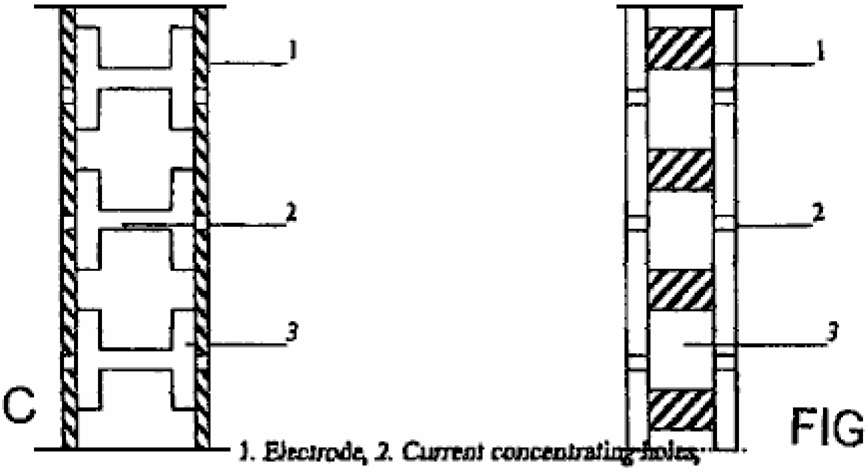

FIG. 18C

Type 3

FIG. 18D

Type 4

1. Electrode, 2. Current concentrating holes,
3. Gas traps

Cross Section of Electrodes showing the Gas Trap and Current Concentrating holes

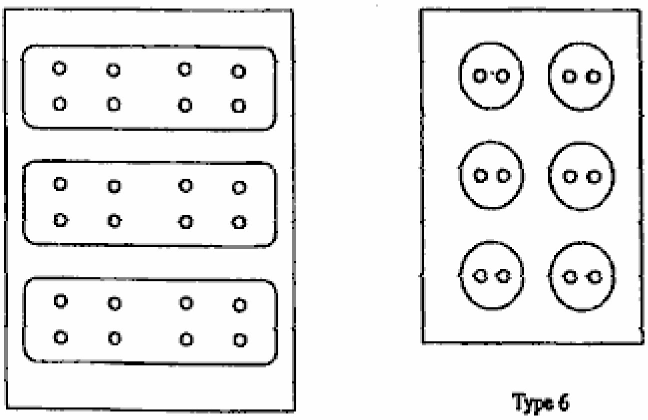

FIG. 18E

Type 5

FIG. 18F

Type 6

Plan or Elevation of Gas Trap Cover Plate (with perforated current concentrating holes)

A number of gas trap and bubble retaining arrangements are shown in **Fig.18A** to **Fig.18F**.

The under-liquid plasma discharge, in order to produce various reductive, oxidative, radicals and neutrals species through excitation, ionisation and dissociation of the liquid molecules and atoms, requires high voltage input DC or AC, normally within 3 KV and current density under 3 Amp/cm^2. The electrodes cathode and anode have to be kept as close as possible but not close enough to cause arcing. The electrode surface is preferably flat, even and smooth with no pronounced irregularities. Because of the need of placing diaphragm and complementary gas trapping and retaining construction on the discharging electrode, a minimum distance of 6 mm to 15 mm has been experimented with and shown to produce steady glow plasma under-liquid. With better material choice and engineering capability, there is no reason why the electrode space distant cannot be further reduced. The size, shape and arrangement of the electrodes is not restricted, but the electrodes will usually be somewhat smaller than those required for conventional electrolysis, for the same gas production volume. Both the electrodes, anode and cathode, can be at work at the same time as the plasma discharging electrodes especially if a gas-trapping dielectric cover construction is provided.

Experiments have been conducted to establish the basic criteria to generate steady and rapid cyclical non-thermal plasma glow discharge under-liquid with basic DC high voltage and low current input at atmospheric pressure and ambient temperature leading to the proposal of a phenomenal model of reactor structure and electrode configuration which demonstrate the usefulness of bubbles or gas pocket that creates the under-liquid environment for plasma discharge and it also provides the back ground of further improvement and construction of reactor unite which verify the inventive idea of under-liquid plasma and it subsequent practical applications.

A reactor according to the present invention can basically follow that of a simple water electrolysis cell with one anode electrode separated from the cathode electrode with an ion conducting membrane and yet has the capability to prevent re-mixing of the produced gas on each half-cell. The electrolyte allows moving across the membrane or replenish through the opening in the reactor. In order to increase the proficiency of the reactor the cathode electrode is placed inbetween two anode electrodes and separated from them by a membrane. The hydrogen gas produced is isolated and collected independently. The polarity of the electrode can be reversed with the anode electrode in the middle when oxidative species are needed for the decontamination process. Most importantly, the simple electrode and reactor unit will form the basic module, placed inside a common bath and linked together to form a lage production unit, and these modules can be replaced individually.

Despite the apparent success of the simple perforated plate-to-plate electrode arrangement, it does not preclude other electrode configurations and arrangements such as tube in tube, wire in tube and other flat surface electrodes having different surface structure e.g. wire mesh, expanded metals, pinned plate, sponge porous metal, corrugated plate etc. as long as it is a good electric conductor, corrosion resistant, heat-tolerant material, i.e. stainless steel, aluminium, graphite, platinum etc. The shape and size of the electrode piece is not restricted and sometime it may form the object article which is to undergo plasma surface enhancement treatment.

In practice, a reactor with vertical electrodes, suits plasma-assisted water electrolysis, reformation of hydrocarbon liquid fuel, production of nano materials and decontamination process, while the reactor with horizontal electrodes suits reformation of hydrocarbon gas such as natural gas, methane, hydrogen sulphurs and the like.

This ability to generate steady plasma discharge, can well be adopted for other useful purposes such as thin and thick-film deposition and additional method in the creating of cold fusion.

There have been a series of experiments conducted to generate non-thermal plasma under-liquid by utilising the gas bubbles self generated during electrolysis, electrochemical reaction, heating and releasing of dissolved air or gases in the liquid. Bubbles can also be produce with the influence such as transient bubbles created by shock waves resulted from pulsed power input, ultrasonic cavitations, laser heating and hydraulic impingement. External introduced gas (e.g. air & fuel gas) is found to work well in providing bubbles environment for ready plasma discharge in a steady manner. A number of experiments have also been conducted to test the applicability of under-liquid plasma in the field of hydrogen generation, hydrocarbon fuel reformation, sterilisation and decontamination and reduction of metal oxide. Because of the restriction of the power converter that some result is less than ideal but it all indicate the potential of the under-liquid plasma which is in the first place having the same physical/chemical capability as its counter part operating in gases environment in exciting, ionisation and dissociation, but with some distinctive advantage which has well been described in the foregoing text.

Generation of steady plasma discharge under-liquid has been one of the primary objectives in the research. In general the generation of steady plasma glow discharge are influenced by a number of factors, such as physical and chemical properties of the liquid, its conductivity, temperature, electrode type, electrode spacing, gas retaining or trapping arrangement, current density, voltage input, reactor construction, liquid circulation, influence of ultrasonic irradiation, pulsed power input etc.

There are of course a number of electrode shapes, size and configuration one could choose. In order to find out the how important is the supply of bubbles or gas pocket affects the generation of plasma, a gas retaining or trapping covering with current concentrating conducting holes over perforated plate electrode is formulated, which has proved effective producing steady glow plasma discharge within the range of 350 V to 2 KV (2,000 V) and current up to 850 mA, but most the time around 100 to 300 mA range. This is considered low in compare with other under-liquid plasma system (i.e. Plasma arc, pulsed high voltage and current electric discharge). Throughout the experiments, a horizontal reactor was used. However an alternative reactor is a vertical reactor.

INTRODUCTION TO THE EXPERIMENTS

Several groups of experiments have been conducted:

1. Preliminary trial experiments
2. Plasma assisted water electrolysis
3. Reformation of methanol
4. Reformation of emulsified diesel
5. Reformation of LPG as hydrocarbon gas (methane is not available in the market)
6. Decontamination or sterilisation of food drink
7. Reduction experiment of TiO_2.

In the preliminary trial experiments a number of electrode types have been adopted and have eventually select the wire to plate configuration and perforated plate to perforated plate or wire mesh as the most suitable under the limiting power supply condition where max. voltage available is 2,000 V and the maximum current is 1,200 mA. In reality, the current input is voluntarily restricted to work below 900 mA for durations not exceeding 30 minutes, to avoid damage to the converter which has happen in a number of occasion which caused stoppage of the experiments for weeks.

To overcome the power supply limitation, and to achieve steady plasma glow discharge, a gas-retaining or trapping cover or layer with current concentration holes has been devised to cover the discharging electrode surface (perforated electrode plate) which is the basic features adopted in the construction of reactor.

In the trial experiments, it has been demonstrated that infrequent visual plasma discharge begins with a voltage of 350 V and steady plasma can be achieved in around 550 V. The initial current input reaches 850 mA and begins to fluctuating in the range of 150 to 650 mA. On many occasions the current fluctuated at 100 mA to 350 mA.

Through these experiments, the mechanism of generating bubbles or gas pocket dielectric barrier which impedes the current flow, leading to an increase of voltage until a threshold voltage is reached which causes the electric breakdown and the formation of plasma inside the bubble, at which point the current immediately returns to its normal level and then another cycle of discharge is established. When the discharge is infrequent it resembles a corona streamer discharge but as the voltage increases, the glow discharge becomes a continuous glow over an extend electrode surface resembling a glow plasma discharge. The colour of the discharge appears as an orange-yellow or red colour in the electrolysis of water and the temperature of the discharging electrode ranges from $50^{O}C$ to about $90^{O}C$ and the temperature of the bath liquid ranges from $40^{O}C$ to $70^{O}C$. No sign of any damage to the electrode or its covering plastic gas trapping plate was observed even after prolong experimentation. When the voltage is allowed to increase beyond the glow plasma region, a plasma arc begin to occurs and becomes an intensive bright blue discharge when voltage is further increased and this causes damage to the metal electrode and plastic covering plate which is easily seen.

On two occasions, hydrogen production was recorded which produced a gas volume with an equivalent energy conversion efficiency up to 56%. Due to damage to the reactor by the plasma arc, that particular experiment cannot be repeated as new model of reactor is designed to achieve low current input and early high voltage response. However with the apparent success of the trial experiment, it shows that a more suitable reactor can be designed specifically for the purpose of hydrogen production by plasma assisted water electrolysis and a higher energy efficiency figure can be achieved with a small reactor.

PLASMA ASSISTED WATER ELECTROLYSIS

Experiments to check the behaviour of plasma discharge at different voltage input levels were carried out. Despite the apparently large volume of bubbles boiling inside the reactor, the total volume of gas produced was unexpectedly low. This may have been caused by the horizontal reactor design adopted throughout the experiments. This may have allowed the hydrogen gas recombine with the hydroxyl ions and convert back into water again. A vertical reactor would be more suited for the plasma assisted water electrolysis where the produced hydrogen gas will rise quickly to the top of the reactor and can be channeled away from the area filled with OH ions.

In this experiments plasma discharge begin to occur at 1,350 V with current fluctuating around 100 mA to 200 mA. At about 1,550 V the reactor produced highest volume of gas. Plasma arc discharge occurs at 1,900 V and is becoming vigorous when the voltage is increased further. KOH of 0.02% concentration has been used as electrolyte additive throughout the experiment.

The production of gas appears to have a linear relation with time but various substantially with different voltage input. The rate of energy consumption is increasing slowly with time in a constant rate which various with the voltage input and its corresponding energy consumption per unit gas volume produced is having a peak at the first 10 minutes of the experiments and level off with time. The temperature in the electrode rise sharply to from 50^{O}C to 90^{O}C and is maintained more or less at that level throughout the test. The temperature in the bath liquid within the reactor rises slowly from its ambient temperature to around 50^{O}C to 55^{O}C.

EXPERIMENTS WITH METHANOL

Several sets of tests have been conducted with the aim of finding out how different hydrocarbon fuels will be affected by the non-thermal plasma under-liquid system. A methanol / water mixture with methanol concentrations of 5%, 10%, 15%, 20%, 25%, 30% and 40% were tested using the same method and equipment set-up already used for the plasma-assisted water electrolysis. There are three independent tests for each methanol concentration. It has been observed that the gas production is peaked at 25% methanol concentration and the energy consumption per unit gas volume produced is also lower than the others and is nearly at constant rate around 0.0225 Kw.h/L. The voltage input for each test is kept at 1,850 V and the current fluctuating in the range of 100 mA to 200 mA. The temperature measured at the cathode electrode started at 80^{O}C and rose quickly to reach over 200^{O}C at the end of a 30 minute experiment. The temperature recorded in other tests stayed within the range of 60^{O}C to 80^{O}C. The temperature of bath liquid at 25% concentration stayed in the range of 50^{O}C to 60^{O}C, which is typical for each of these tests.

The greatest surprise coming out of the experiments is that the produced gas is composed of two gases. One is hydrogen gas and the other is oxygen gas and no trace of carbon dioxide is found. Repeated examination of the gases produced shows the same result and the hydrogen is having an average value of 51.3% and oxygen 48.7%. This is later found out that the presence of oxygen in the gas is the result of the removal of the separating diaphragm. An acidic electrolyte is preferable in order to increase the hydrogen gas percentage in the output gas mix. This is shown in the latest experiments using sulphuric acid of 0.02% concentration.

A set of experiments with the use of 40 KHz ultrasonic bath having methanol concentration of 10%, 15%, 20% and 25% with the same reactor and equipment arrangement have been conducted to find out the influence of ultrasonic radiation. It has been observed that gas production at 25% is substantially higher than the others and yet the energy consumption per unit gas volume produced is around 0.015 Kw.h/L throughout the 30 minute experiment, which is lower than that without ultrasonic radiation.

The chromatographic analysis of the output gas having an average value of 97.56% hydrogen and 2.4039% of carbon monoxide. Chromatographic analysis of gas produced by reformation of methanol with ultrasonic radiation. Methanol concentration at 25%, and conductive reagent 0.02% sulphuric acid.

TABLE 1

Test	Resident time minutes	Composition V/V %	Gas type
First Test	0.364	98.9937	H_2
	1.047	1.0063	CO
Second Test	0.364	96.7418	H_2
	1.047	3.2582	CO
Third Test	0.354	96.9719	H_2
	1.048	3.0281	CO
Average		97.5691	H_2
		2.4309	CO

EXPERIMENTS WITH LPG

Decomposition of LPG by under-liquid plasma has been conducted (methane or natural gas is preferred but none is available in the market). The LPG is allowed to pass through the horizontal reactor through the perforated anode plate and enter the reactor and trapped at the cathode plate where plasma is taking place at voltage 1980V and current at 100 to 130 mA input. C_3H_8 and C_4H_{10} are the two main components of LPG, it is expected that the volume output having been subjected to plasma dissociation should be larger than the original input volume. This is found to be so that the output gas volume increases by about 50%. The experiment is conducted together with ultrasonic radiation. It is regrettable that the chromatogram is incapable of undertaking analysis of the output gas composition. The next set of experiments should be conducted with methane or natural gas so that more definitive result could be obtained. Rudimentary analysis of the produced gas has shown the presence of H_2, CO_2 and C_3H_6 etc.

REFORMATION OF EMULSIFIED DIESEL AND WATER WITH ULTRASONIC IRRADIATION

Decomposition of emulsified diesel with distilled water has also been carried out. Diesel oil in 25% and 50% by volume has been emulsified by adding 1.25% emulsified agent inside the ultrasonic bath. Since the diesel oil is dielectric, a KOH additive is needed. The emulsified liquid is subjected to plasma discharge at a voltage of 1,850 V and a current fluctuating from 100 mA to 200 mA for a period of 30 minutes. The temperature of the cathode electrode increased from $70^{O}C$ to about $94^{O}C$ during the experiment. The gas volume produced was 160 ml with 25% diesel and 1,740 ml with 50% diesel, which is substantially higher and its energy consumption is 0.1213 KWh/L. It is clearly indicated, that gas production is proportional to the diesel contend in the emulsion. Because of the limited power supply capability, the voltage of 1,850 V is merely adequate to produce some plasma discharge but it is far from establishing extensive vigorous plasma with higher current and voltage input, which would produce more gas.

STERILISATION (DECONTAMINATION) OF MULBERRY FRUIT DRINK

The ability of non-thermal plasma to decontaminate noxious chemicals and gases has already established. This experiment is conducted to find out how well the under-liquid plasma may apply in the field of beverage sterilisation with low levels of plasma radiation and keeping the treated liquid within an acceptable temperature.

Two litters of 15% concentrated fruit drink is placed in the bath where a horizontal reactor is submerged. The bacteria count and mold colony count is obtained before the forty minute test. A sample of the fruit drink is extracted at 20 minutes and 40 minutes. The mulberry drink has good natural conductivity so no additive is required. The applied voltage is kept at 1,200 V and the current fluctuates around 200 mA. The temperature at the electrode is maintained at around $62^{O}C$ and the bath liquid (fruit drink) is kept at around $50^{O}C$.

TABLE 2 - The micro-organism count

Time (minutes)	Bacteria count/ml	Mold colony count/ml
0	3,400	37,000
20	1,300	17,000
40	90	10

The favour and colour of the fruit drink had not changed after the test. The bacteria sterilisation is 97.5% and that of mold colony has been sterilised more than 99%. This has given proof that the under-liquid plasma has the same capability as those operated in a gaseous environment.

The time for the treatment could be reduced by providing forced circulation of the liquid and increasing the electrode size. Sterilisation of drinking water imposes no limit on the temperature. Higher voltage input for better plasma glow discharge spreading over larger and multiple electrodes should be able to remove all harmful chemical substance, bacteria, biological matter and microbial matter, thus meeting the municipal requirement for drinking water.

REDUCTION OF METAL OXIDE

One trial experiment to reduce TiO_2 back to Titanium metal has been attempted with little success. It was found that in the X-ray diffraction test, minor traces of titanium nitride and titanium monoxide (TiO) were found. In the experiment, only a minor electrolyte of 0.05% KOH with 25% methanol added to the distilled water was used to increase the production of hydrogen. The applied voltage was fixed at 1,850 V and the current fluctuated in the range of 200 mA to 500 mA. Ultrasonic radiation up to 40 KHz was also provided through an ultrasonic bath. The temperature recorded in the bath liquid rose from $46^{O}C$ to $75^{O}C$ at the end of the 60 minute test. The fine TiO_2 with was suspended with ultrasonic radiation, in the bath liquid in colloidal form, showing as a milky white colour, which gradually became a milky yellow colour towards the end of the experiment. The bath liquid also became viscous.

The X-ray refractive “d” value of TiO_2 were:

Before the experiment: 3.512, 1.892, 2.376 but after the experiment there were two new groups of “d” measurements not seen before the experiment:
a: 2.089, 1.480, 2.400
b: 2.400, 2.329, 2.213
This indicates a new material, positioned between TiO and n-Ti_3N_2-x.

This experiment indicates that a change did happen to the TiO_2, possibly because of the limited voltage and current available as input, which could not provide the intensity of plasma discharge needed to effect the reduction process properly. Higher concentration of either HCl or H_2SO_4 should be use as reagent demonstrated in the following chemical reaction and in the same time serving as electrolyte. The horizontal reactor is not a suitable piece of equipment to undertake such experiment; it is adopted merely for convenience. A wire-in-tube and tube-in-tube reactor would be a suitable candidate, which would keep the metal oxide exposed to plasma discharge throughout the whole of the duration of the experiment. Further, more hydrogen or CO gases produced during the process may be passed back to the reactor to enhance the reaction. (Methane is a suitable gas for this type of reduction process, as both hydrogen and CO gas will be produced to enhance the reaction). The following are the chemical formula, which suggested by transforming TiO_2 to either $TiCl_4$ or $TiOSO_4$ as a soluble ionic compound, will facilitate its reduction with prolong exposure to active atomic hydrogen under the influence of a plasma catalytic environment.

$TiO_2 + 4HCl \rightarrow TiCl_4 + 2H_2O$,
$TiCl_4 + 4H \rightarrow Ti + 4HCl$.
$TiO_2 + H_2SO_4 \rightarrow TiO(SO_4) + H_2O$,
$TiO(SO_4) + 4H \rightarrow Ti + H_2SO_4 + H_2O$
Where $TiCl_4$ is readily produced by an established process from ilmenite.

Similarly, aluminium oxide Al_2O_3 can first be transformed to $AlCl_3$, which is soluble ionic compound, ready to be extracted by electro-deposition enhanced with plasma-reduction and plasma-electroplating process:

$Al_2O_3 + 6HCl \rightarrow 2AlCl_3 + 3H_2O$,

$2AlCl_3 + 6H \rightarrow 2Al + 6HCl$.

In the case of electrode positive oxide such as Fe_2O_3, it can be reduced in the presence of ionised atomic hydrogen and the presence of carbon monoxide with catalytic reactive plasma irradiation.

Fine metal oxide powder irradiated with ultrasonic waves will maintain in colloidal form allowing it to be exposed to the reduction agent atomic hydrogen and/or carbon monoxide. The process of ultrasonic cavitations and collapse is also known to create extreme localised high temperature up to $10,000^{O}$K and thousands of atmospheres of pressure together with the high temperature at the impact point of the fine powder particles which is beneficial to the entire reduction process.

DETAILS OF THE EXPERIMENTS CARRIED OUT

Establishing Generation of Under-Liquid Plasma:

Distilled water is used in the experiments with 0.05% KOH as a conducting reagent. The voltage is controlled at 1,250 V & 1,850 V. The current is raised in steps of 100 mA until it reaches 850 mA. In the beginning the voltage remains low and gradually builds up as more gas bubbles are generated. Once it reaches a certain high level the current drops immediately. The self-regulating current and voltage input of the power unit automatically switches from current input control to voltage input control. At 45 seconds after switching the experiment on, the voltage rose to 470 V and the current dropped below 500 mA. From 3 min. 10 sec to 5 min 20 sec, the voltage rose to a relatively high level while the current kept on fluctuating. After a period of unstable voltage and current movement they become stabilised at 20 min with the characteristic high voltage and low current. At this instant prominent glow is observed at the perforated cover plate (current concentrating holes). The temperature of the cathode electrode has risen and stays steady at around 70^{O}C.

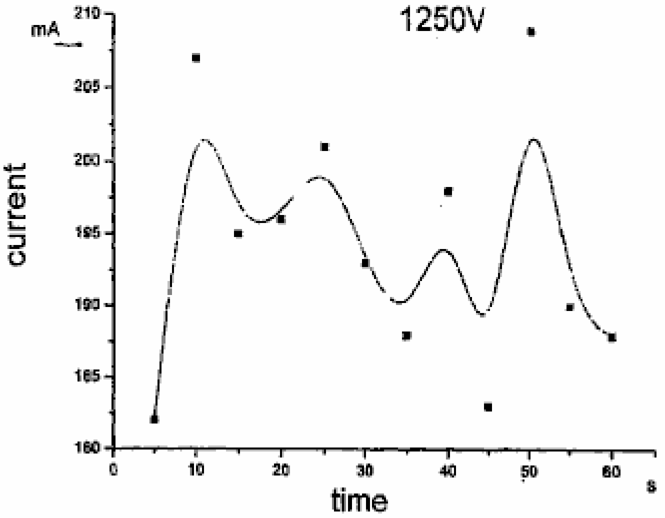

Glow discharge at stable 1250V input

FIG. 25

Fig.25 shows the current fluctuating with stable 1,250 V voltage input and a steady plasma glow discharge. The temperature of the cathode increases rapidly in the early stages and then becomes steady at the 5 min mark, and then rising slowly to it's highest temperature of about 96^{O}C.

OBSERVATION

Generating Under-Liquid Plasma:

In accordance with the experimental results, it is possible to generate non-thermal plasma under-liquid providing that certain conditions are met: a suitable power supply, electrolytic liquid, reactor and other supplementary equipment.

The design of the reactor, with relatively low voltage and limited power rating (restricted current input) requires special construction to trap or retain gas and at the same time to raise the current density at the discharge area.

The gas trap or chamber should be of a suitable size. If the gas trap or chamber is too big, then the trapped gas is too thick which requires a much higher voltage for discharge breakdown and prolongs the time of each cycle of discharge. It becomes difficult to maintain rapid cyclical steady glow discharge. The perforated covering plate, is also an important part of the electrode structure, concentrating the current density. The thickness of the perforated plate and the size of the gas trapping chamber should be carefully controlled so that the electrode spacing gap is not unduly wide as that also influences the voltage requirement. The size and disposition of perforated holes can be determined by trial and error. Wide electrode spacing increase the voltage input requirement and unsuitably close electrode spacing will cause early occurrence of plasma arcing with high current surge and generation of temperatures which will damage the electrodes and their attachments.

The power unit should be of adequate power rating. The electric breakdown is highly dependent on the high voltage supply. If the rating of the power supply unit is inadequate, it could easily be damaged during sudden the high current surge caused at cyclical electric breakdown. There will be no plasma discharge if the power input is inadequate.

The electrolytic liquid should have suitable conductivity, not too low nor too high. Voltage cannot be easily raised between two electrodes the liquid has high conductivity and no plasma discharge will be generated unless there is a high voltage input. The discharging electrode may be fully encapsulated inside a bubble barrier, but high conductivity liquid allows the current to pass through the bubble-liquid interface which in turn, also prevents the voltage rising high enough. If the conductivity of the liquid is too low, then the bubble barrier forms a complete dielectric barrier which requires a much higher inception voltage to cause electric breakdown or discharge and at the same time, the passage of current becomes too low which results in a low current density which also influences the occurrence of discharge. A much higher breakdown voltage (discharging voltage) creates electric arcing in gaseous condition which is no longer considered non-thermal under-liquid plasma discharge.

CONCLUSIONS

1. Gas layer or bubbles form the dielectric barrier that provide the environment for building up the discharge voltage and gaseous space for plasma discharge to take place. High voltage and relatively low current input is characteristic of under-liquid plasma.

2. With the characteristic high voltage and low current requirement, the under-liquid plasma can be generated over a wide range of liquids. The electrolyte liquid can be acidic, alkaline or a solution of salts. Liquids containing conducting impurities or a mixture of organic compounds may also serve as electrolyte such as the case of tape water and fruit drinks.

3. There are a number of factors which would affect the generating of under-liquid plasma such as voltage, current density, configuration of electrodes, area of electrode surface, electrode gap spacing, electrolytic physical and chemical properties, gas retaining and trapping arrangement, provision of plasma enhancement, ultrasonic cavitations, pulsed power supply, ambient temperature and reactor construction. This appears complicated, but the experiments undertaken have demonstrated that all the mentioned factors can be manipulated to achieve generation of stable non-thermal plasma at one atmosphere of pressure.

4. Plasma is the fourth state of matter. It has been widely employed in the field of chemical, electronic, materials and energy industries. Plasma generated under-liquid plasma has its own intrinsic characteristics and advantages, which have already proved to be a useful tool for plasma electroplating or deposition of both metallic and non-metallic materials. It will find its application in the plasma-assisted water electrolysis for hydrogen production; reformation of hydrogen rich compounds or hydrocarbon fuel (gas and liquid); decontamination of both liquid and gas pollution discharges containing persistent harmful chemicals, dissolved heavy metals and organic and biological contaminants; sterilisation of fruit drinks, potable water supply; and reduction of material oxide such as oxide ores, metal oxide as an alternative method metal refinement. It is probable that the proposed under-liquid plasma generation, and this established basic scientific information, would form the basis for further refinements leading to the practical new applications put forward in this patent application.

PLASMA ASSISTED ELECTROLYTES FOR HYDROGEN PRODUCTION

Water electrolysis is still used for the production of pure hydrogen. This hydrogen production is restricted because of it's relatively low energy conversion efficiency. In order to achieve higher energy efficiency, the electric voltage must be kept low to avoid energy loss through heat conversion. There are also claims that the energy efficiency can be improved by better electrode configuration, an increase in the reactive surface area, reduction of the electrode gap and increasing the operatingpressure. The PEM solid electrode system is in its early development and its efficiency remains similar to that of water electrolysis system. In any case the basic principle of water electrolysis has not changed since it was first put to use. Electrolysis as a whole, is considered to be non-competitive with the competing production process of reforming hydrocarbon fuel, but electrolysis has the advantage of being a clean process producing high gas purity and CO_2 is not produced.

The hydrogen bubbles evolving from the electrode surface slow down with time when tiny bubbles gradually built up and smother the electrode surface. These are not easily dislodged and the rate of hydrogen production is reduced further as those tiny bubbles become a barrier to current flow between the two electrodes.

The proposed invention is closely related to the water electrolysis process but the mechanism of separating hydrogen from water molecules is different. Generating non-equilibrium plasma within the bubbles that smother the electrodes will break down the dielectric barrier bubble layer and cause the normal flow of current to be resumed. At the same time, water molecules contained in the bubbles coming into contact with the plasma discharge, will be dissociated to produce extra hydrogen. In addition, the vigorous plasma discharge near the electrode surface will also create an hydrodynamic condition, which will wash away the fine bubbles which block the current flow. The mechanism of producing hydrogen by plasma discharge is different from the conventional electrolysis which splits the ionic water molecules by electro-polarity attraction, while in the plasma discharge the water molecule is broken down as the result of electron collisions. The water molecules under the plasma discharge irradiation would lose one electron due to electron collision to yield $H_2O + e \rightarrow OH + H^+ + e$

The hydrogen produced is of high purity. Ordinary potable water or rainwater with a very low concentration of electrolyte can be used as the main source of material, instead of distilled water, as they contain sufficient impurity to be slightly electro-conductive.

The experiment has demonstrated that hydrogen gas can be produced with plasma glow discharge as a supplementary process to the conventional method. The energy required to produce 1 cubic meter of hydrogen with plasma glow discharge with a very rudimentary reactor has achieved an efficiency of 56% which can be further improved with better engineering, by closing the electrode gap distance, selecting the right concentration of electrolyte, reactor construction and better means of trapping and retaining gas near the discharge electrode.

High temperatures of up to 90^{O}C is recorded in the electrolyte, which increases within very short time of the reaction. This may in part due exothermic reaction of recombining H and OH to water. The excessive heat can well be utilised as secondary source of energy. The gas or vapour bubbles by heating assuming greater importance as source materials for plasma dissociation leading to the production of Hydrogen. The high purity oxygen co-produce is also a valuable by-product with many applications.

Since high voltage with moderate current is needed in the plasma process, the production rate per unite area of electrode surface is high, and so only a small reactor is needed for the production of hydrogen, especially when other plasma enhancement methods are employed, such as ultrasonic cavitations, pulsed powers and RF input.

The electrodes could be of any conductive materials such as aluminium, stainless steel, graphite, tungsten, platinum, palladium etc. The size of the electrode for the plasma discharge is much smaller than that required by the conventional electrolysis to produce the same quantity of gas. As a result of this, a smaller reactor is possible.

Sponge porous electrodes will increase the reactive surface area available to produce electrolysis gases. In the experiment, several layers of fine wire mesh were packed tightly together to mimic a sponge porous electrode plate.

Some of the basic electrode configuration is: plate to plate; perforated plate to perforated plate; plate or perforated plate to wire mesh; wire mesh to wire mesh; plate to pinned plate; dielectric coating on one or both electrodes plate or mesh or pinned plate, tube in tube and wire in tube arrangement. It is noted that electrode configuration including any lining or covering materials that help to concentrate the current density and having the ability in retaining gas around the electrode would be adopted which will help to lower the voltage and current requirement to generate steady plasma discharge.

In order to create an environment for steady and short cyclical plasma glow discharge as already mention in the previous text, the electrode configuration should be so structured to retain the bubbles and concentrate the current density and yet keeping the true electrode gap distance to a minimum. This creates a suitable voided space either in the metal electrode or in the covering materials, capable of retaining gas while at the same time having the mechanism to concentrate the current density to a localised discharge point. This leads to a wide variety of designs and choice of materials to satisfy plasma discharge requirement.

In order to avoid recombination of H^+ and H_2 with OH ions and reverting back to water, the hydrogen atoms after regaining their lost electrons through contacting the cathode should be allowed to escape quickly from the area which abounds with other oxidation species and radicals. This has greatly influenced the productivity of hydrogen gas. If H^+ and OH is allowed to recombined, despite of the apparent bubble boiling in the reactor very little gas can be collected and the temperature in the reactor rises quickly which could well be the exothermic effect of recombination of H^+ and OH.

The hydrogen produced is collected separately from the oxygen. Since the produced hydrogen gas contains a fair amount of water vapour, the hydrogen gas is collected by passing it through a water chiller or other known method, so that the measured gas volume is at room temperature with minimum water vapour content.

The basic plasma assisted electrolysis cell or reactor can be produced in modular form which can be mounted side by side and placed inside a single electrolytic tank with their respective power and output gas collected to form a major production unit. Several reactor types can be employed for the production of hydrogen. Rod or wire in tube reactor, tube in tube reactor, single or multiple cell reactors are also suitable for the plasma assisted water electrolysis. The gas retaining and current concentrating cover will be affixed on the cathode electrode facing the anode electrode. A horizontal reactor whose cathode has a gas-retaining cover can be placed on top of an anode which is separated by a diaphragm and the hydrogen gas will then collect in isolation.

The introduction of ultrasonic cavitations into the electrolytic liquid is easy since the electrolysis bath is also the ultrasonic bath and ultrasonic transducers can be attached to the bath externally. A mixture of sonic frequency should be used to avoid any occurrence of a dead sonic zone. The introduction of sonic excitation through cavitations enhances the production performance of plasma-assisted electrolysis.

Pulsed high-voltage DC supply with single polarity square wave from 5 KHz up to 100 KHz has been found to be beneficial for generating plasma at a much reduced voltage.

The distinct advantage of the under-liquid plasma enables ionised species migrate to the respective half cell and electrodes which will avoid and minimise re-mixing of the produced hydrogen and oxygen causing a reversion to water again and creating a hazardous, explosive condition. The oxygen is considered as a by- product which can be collected for use or it can be channelled to the combustion chamber if hydrogen is used as direct fuel for a combustion engine.

Water is the primary source material for hydrogen production, being economically available and of unlimited supply. It is a completely clean source material that produces no unwanted by-products.

The anode may be gradually losing its materials due to electro transportation, but if so, it will be a very slow process. In practice the polarity of electrodes can be reversed which reverses the materials transportation and deposition. Conductor materials which are inert to electro-chemical corrosion are a good choice to serve as electrodes.

A chemically conductive reagent may be added to water to increase its conductivity and a foaming agent added to enhance generation of bubbles. The electrolyte can be of acidic or alkaline base. The concentration of the electrolyte should be maintained at a steady level for best results. High electrolyte concentration increases liquid conductivity as well as productivity of gas bubbles but it might prevent the rising voltage required for discharge as the current flow between electrode will not be inhibited by the presence of bubbles. However, a very low concentration of electrolyte will favour dielectric breakdown of bubbles, as a lesser current will be carried by the liquid medium inbetween the bubbles. It has been found that either acidic or alkaline electrolyte with 0.02% concentration work extremely well in maintaining steady glow discharge with DC voltage ranging from 350 V to 1,800 V and a current from 100 mA to 800 mA.

Tap water has been used without adding any conducting reagent and it often works unexpected well, most likely due to present of impurity and high pH, in the plasma-assisted electrolysis where steady glow discharge occurs at around 450 V to 900 V and current around 200 mA to 350 mA. The power input requirement varies in accordance to electrode spacing, electrode and reactor configuration, electrolyte concentration and the structure of gas retaining arrangement. Again other plasma assisted method such as pulsed power input and ultrasonic cavitations etc. also help to lower the power input requirement.

The process is in general, conducted at one atmosphere pressure. An increase of pressure will slow down upward movement of the bubbles and raise the temperature of the electrolyte. Some increase in temperature in the electrolyte is not detrimental to the generation of plasma. Water vapour bubbles provide the source materials and active environment for plasma discharge. In general, electrolyte temperature is well below boiling point as non-thermal plasma produces little heat. The temperature sometime rises quickly in the electrolyte due to occurrence of infrequent plasma arc and exothermic in the recombination of H+ and OH- in quantity.

During the steady glow discharge, vigorous bubbles with yellow/orange/red colour light spots appear all over the plastic perforation. The light spots also appear widely on the electrode surface when the voltage is increased. On examination of the electrode and plastic cover sheet, no burn marks were observed. This proves that the plasma glow is non-thermal after an hour of glow discharge. The temperature in the electrode plate recorded with a thermal couple was around 50^{O}C to about 90^{O}C. The gas produced is composed mainly of hydrogen with some water vapour, which condenses quickly on cooling. The rate of hydrogen production is variable and energy conversion rate also fluctuated throughout the test. This is suspected to cause by the recombination of H and OH, which is affected by the electrode and reactor structure and configuration.

Hydrogen can now be produced with high voltage and low current, which is contrary to the conventional electrolysis system where a small reactor with a high rate of production is becoming possible. This has clearly demonstrated that the mechanism of producing hydrogen with plasma discharge is different from conventional water electrolysis in a number of ways. Steam and gas vapour produced due to heating of the electrodes (cathode) in short space of time are becoming an importance source of materials for plasma dissociation that also influence the productivity of hydrogen.

1.3 Experimental Procedure

1.3.1 A flow diagram for carrying out experiments in relation to this invention is shown in **Fig.28**.

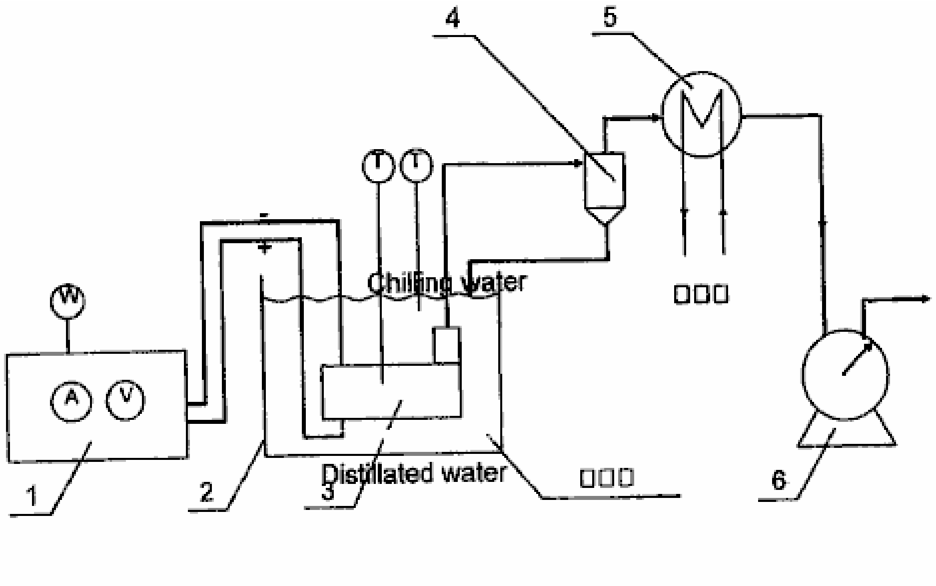

FIG. 28

The apparatus comprises broadly, a DC power source **1**, liquid bath **2**, reactor **3**, gas and liquid separator **4**, water chiller **5**, and gas-volume measuring meter **6**. Gas was produced by electrolysis which was catalysed by the plasma. Hydrogen gas was produced at the cathode and oxygen gas at the anode.

1.3.2 Equipment Function:

DC power source: provides high voltage DC.
Horizontal reactor: generation of non-thermal under-liquid plasma.
Gas and liquid separator: to separate liquid from gas and return as chilled liquid.
Chiller: to condense any liquid vapour admixed in the gas and return to reactor.
Gas-volume measuring meter: to measure the volume of gas flow.

1.4 Method and Operation of the Experiments

(1) The experiment is conducted in according to the occurrence of plasma discharge. Six different levels of voltage are selected to produce under-liquid plasma with same reactor for the generation of hydrogen. They are: 1350 V, 1450 V, 1550 V, 1650 V, 1750 V, and 1850 V. Each experiment lasts 30 minutes and the experiment is repeated three times under the same set of conditions. The data obtained are than averaged out.

1.5 Experimental Observations

Plasma discharge at 1,350 V is observed to have few and limited lighting illumination on the electrode in comparing with those vigorous, steady discharging over a much larger electrode surface at voltage 1,850 V. The corresponding current input is also very much reduced. It has been recorded that the temperature at the cathode electrode rises with time until it reaches about 90^{O}C and gradually becomes steady. The colour of the plasma discharge appears to be orange and red and it’s colour is greatly different from that of electric arc (plasma arc discharge) which appears to be sharp bright blue in colour.

Applicant also conducted experiments with the same equipment utilising the under-liquid plasma to transform methanol for use in hydrogen production. Applicant found that the plasma was efficacious in producing hydrogen gas from the methanol. CO and CO_2 gases were completely absent from the gas produced. This was unexpected. Without being bound thereby, Applicant believes that CO and CO_2 may have been absorbed by KOH which was added as a conductive agent to the electrolyte. Some oxygen gases were recorded before methanol was added to the electrolyte.

Applicant also conducted experiments with the same equipment utilising the under-liquid plasma to reform hydrocarbons for hydrogen production. Applicant found that the plasma was efficacious in reforming the hydrocarbons and producing amongst other things hydrogen gas.

Applicant also conducted experiments with the same equipment utilising the under-liquid plasma to treat diesel oil. The diesel oil was emulsified in water to disperse it through the body of liquid. After being subjected to plasma conditions near the cathode, a gas was produced that was smoky and resembled an exhaust gas emission that did not easily burn. Applicant established by means of these experiments that diesel oil could be reformed and also dissociated by the in liquid plasma with this equipment.

Reformation of hydrocarbon liquid and gas fuel, and hydrogen rich compounds for hydrogen production:

Water is one of the primary source materials, which serves as carrier, conductor and confinement to the bubbles space where plasma corona and glow discharge would take place when adequate electro-potentials apply across single, or multiple electrodes pairs. The hydrocarbon fuel methane (gas), methanol, diesel, gasoline, kerosene (paraffin), ethane, natural gas, LPG gas, bio-diesel etc. and hydrogen sulphur (H_2S) are also good source material for hydrogen production.

The majority world-wide of hydrogen production conventionally is by high-pressure steam reformation of methane. This requires high pressure and high temperature. The production plant is large and costly to set up. Storage and delivery in association with the production are an added cost for the supply of hydrogen gas. The importance of hydrogen as an alternative environmentally clean fuel is well understood. The upcoming fuel cell technology demands an economic and ready supply of pure hydrogen gas. To produce hydrogen with a small processor to enrich fuels for combustion engines and gas turbines will not only be reducing fuel consumption but it also reduces polluting emissions.

The proposed plasma reformation process can deal with both gaseous fuel and liquid fuel. The gas fuel will be bubbled into the reactor along with an inhibitor to slow down the upward flow of the fuel gas. Since the dissociation of the hydrocarbon fuel will be mainly achieved by plasma dissociation which is similar to the plasma-assisted electrolysis process, but with electrolytic liquid containing hydrogen rich compounds. In the case of liquid fuel, it can either form a mixture with water or be emulsified with water. The percentage of fuel in the mix depends on the type of fuel, its conductivity, boiling point, flammability and electrochemical reaction. The reformation is mainly due to partial oxidation either with the active OH^-, O^-, O_2, O_3 created by the plasma dissociation. At the same time, the hydrogen-rich compound such as CH_4 or CH_3OH will be dissociated directly with electron collisions. Since carbon dioxide is a major by-product together with some other minor gases coming out from the impurity of the fuel, they will be separated by the conventional absorption method or the membrane separation method.

Transformation of hydrocarbon fuel by corona and glow plasma has been attempted by passing the hydrocarbon gas such as methane, natural gas, LPG and vaporised liquid fuel sometime mixed with water vapours through the plasma reactor. They have all been successful in producing hydrogen-rich gas through corona discharge at atmospheric pressure by subjecting methane, vaporised methanol, diesel fuel mixed with water vapour, by passing it through a plasma gild arc reactor, wire in tube reactor and reactor proposed by MIT plasmatron or other gas phase corona streamer reactor.

The proposed under-liquid plasma reactor has many advantage over the gas-phase plasma reactor as it is able to generate a steady plasma-glow discharge at a very much lower voltage, i.e. from 350 V to (rarely) 1,800 V with current in the range of 100 mA to 800 mA in water. The liquid medium will also permit the application of ultrasonic waves producing an effect which will enhance the generation of glow plasma and thereby increase the overall transformation process. Again, no external air or gas is need be introduced for the reaction. However, the hydrocarbon gas such as methane, natural, LPG or hydrogen sulphurs gas can be introduced to work in conjunction, and complementing the liquid fuel in the reformation process. The fuel gases will enhance plasma-discharge reformation and allow it to take place without having to rely on gas produced by electrolysis.

Those hydrocarbon fuel molecules which come in contact with the plasma-discharge, will be subjected to dissociation and partial oxidation depicted in the following:

$H_2O + e \rightarrow +OH + H^+ + e$ dissociation
$CH_4 + e \rightarrow CH_3 + H^+ + e$ direct plasma dissociation
$CH_4 + H \rightarrow CH_3 + H_2$ reacting with H radicals
$CH_4 + H_2O \rightarrow CO + 3H_2$ partial oxidation
$CO + H_2O \rightarrow CO_2 + H_2$ water shifting
$CH_3OH + H_2O \rightarrow CO_2 + 3H_2$ electrolysis and partial oxidation
$H_2S \rightarrow S + 2H$ without experiencing oxidation
$H_2S + 2H_2O \rightarrow SO_2 + 3H_2$ partial oxidation
$SO_2 + 2H_2O \rightarrow H_2SO_4 + H_2$

Endothermic catalytic conversion of light hydro-carbon (methane to gasoline):

$$CnHm + nH_2O \rightarrow nCO + (n + m/2)H_2$$

With heavy hydro-carbon:

$$CH1,4 + 0,3H_2O + 0,4O_2 \rightarrow 0,9CO + 0,1CO_2 + H_2$$
$$C_8H_{18} + H_2O + 9/2O_2 \rightarrow 6CO + 2CO_2 + 10H_2$$

The hydrogen gas and carbon dioxide are collected. The CO_2 is separated by establish absorption or the membrane separation method.

The OH radical produced by the plasma dissociation will play an important role in oxidising the CH_4 to produce CO which would further be oxidised to become CO_2. The same applied to methanol CH_3OH and H_2S. The S is being oxidised to form SO_2 and further oxidising to become SO_3 and subsequently reacting with H_2O to produce H_2SO_4. This type of chemical reaction will be possible only with the encouragement of the highly chemical reactive and plasma catalytic environment. Not every CO will become CO_2 and sulphur particles may be observed in the precipitation.

REACTOR

There are number of reactors which can be used for the reformation of hydrogen-rich compounds. Reactors such as the wire in tube, tube in tube; single cell and multiple cell reactors; and the multi-electrodes without diaphragm separation. The tube in tube reactor and tower reactor with horizontal electrodes are suitable for treating both liquid and gas hydrocarbons and both at the same time. The anode and cathode are closely spaced with a gap distance ranging from 6 mm to 12 mm and are covered with dielectric gas-retaining and current-concentrating construction on one side or both sides of the electrode. One important aspect of the reactor is having the construction, which will accommodate the ultrasonic transducer, which would induce proper sonic cavitations uniformly distributed throughout the reacting volume. The size, shape and arrangement of the electrodes can vary but its size would be restricted by the electric power available. A small reactor electrode plate is quite adequate for good uniform discharge and high productivity. The size of reactor plate use in most of the experiments is in the range of 16 cm^2 to 30 cm^2. It is preferable that the non-discharging electrode has an electrode area larger than the discharging electrode with the dielectric gas-retaining construction. With sufficient power available, both the anode and the cathode electrode can be functioning as plasma discharging electrodes at the same time. This is particularly useful in the partial oxidation process.

In the case of an emulsified oil/water mixture, it is best maintained with ultrasonic excitation which at the same time generates transient micro bubbles which enhance the whole reactive process. Hydrocarbon gas may also introduce to the reactor to form air bubbles or trapped gas pockets for the ready formation of the plasma glow discharge. Since the oily hydrocarbon fuel is highly dielectric this would require a higher concentration of conducting reagent than that required for the plasma-assisted water electrolysis, in order to maintain a suitable level of current density for the discharge to occur.

Reformation of methane gas by the under-liquid non-thermal plasma is by bubbling the gas through the perforated horizontal electrodes of tower a reactor or a tube-in-tube reactor. Since the methane gas is to be oxidised by the plasma dissociated water molecule ($OH^- + H^+$) to form carbon monoxide and hydrogen gas ($CH_4 + H_2O \rightarrow CO + 3H_2$). The CO will be further oxidised to form CO_2 with oxygen derived from the plasma dissociated water molecule, releasing two more hydrogen atoms (H_2). The resultant gas is either H_2 or CO_2 with perhaps small amount of CO. The hydrogen gas will be collected with reasonable purity after the CO_2 or CO is removed by absorption or membrane separation. Since the methane gas may not thoroughly reform with one past through the reactor, it is important to regulate the gas flow rate to ensure suitable resident time for the reformation or to have the methane gas recovered by the next round of reformation or to have the gas going through a series of reactors to made sure that the methane gas is fully utilised. The later case may not be energy efficient.

Reformation of methanol for hydrogen production can be achieved in the first place, by ordinary electrolysis or by partial oxidation. When CH_3OH is subjected to plasma discharge irradiation, it will react with the oxidising species and radicals dissociated from the water molecules. Conventional electrolysis will also contribute to the overall production of hydrogen gas. Reformation of methanol/water mixture will achieve better efficiency when plasma discharges is used in conjunction with ultrasonic excitation and cavitation. Several types of reactor can be adopted for the methanol reformation such as a tower reactor with horizontal electrodes, a tube-in-tube reactor, a transverse flow reactor, etc. These types of reactor offer very active oxidising species and hydroxyl radicals needed in the reformation.

Reformation of heavy oil such as diesel by under-liquid plasma discharge will be with emulsified liquid. The best way to maintain a thorough emulsification of diesel fuel and water is by ultrasonic excitation. Micro droplets of diesel will be encapsulated in the water. It is again observed that the conductivity of the emulsified liquid is very low as diesel oil is dielectric and current can only be conducted through the water film inbetween. This has rendered the need of more electrolytes added, especially as the diesel content increases. Bubbles are not easily produced by electrolysis due to its low current flow. It is therefore an advantage to either introduce gas to the reactor from outside or to produce ultrasonic cavitations in the liquid at the same time as the emulsification of the water/oil mixture. The tower reactor, tube-in-tube reactor and the transverse-flow reactor are all suitable for heavy hydrocarbon fuel reformation provided that an adequate ultrasonic transducer is properly located to ensure effective excitation and cavitations distributed throughout the liquid volume. A pulsed power supply will enhance the plasma generation and electrode heating will assist the generation of bubbles at the discharging electrode.

REDUCTION OF METAL AND MINERAL OXIDE PROCESS

Mineral refinment is an expensive and polluting process. To remove oxygen from the oxide, is either by reacting with higher electro-positive elements, which is uneconomic, or by exposing the metal oxide to C, CO, and hydrogen inside a high-temperature furnace such as the case in iron production. The electrolysis of a molten melt of Al_2O_3 or TiO_2 to extract pure metals Al or Ti respectively, consumes a large quantity of electricity, and requires the use of expensive refractory and electrode materials along with polluting emissions, render these two useful metals very expensive and inhibit their common application.

An under-liquid plasma reductive process to reduce oxide of ore or metals is proposed. The plasma discharge irradiation of the metal oxides in a highly catalytic environment, will cause interaction with the active hydrogen atoms produced by the plasma dissociation of water or methane or a methanol/water mix and introduced hydrogen gas together with the assistance of ultrasonic excitation would be sufficient in many instances to dislodge the most stubborn oxide.

It is reported that research is underway to extract Al from Al_2O_3 by electrolysis. Aluminium is electrode wired to cathode from porous Alumina anode electrode. The reduction of TiO_2 and Al_2O_3 by hydrogen plasma discharge is also being actively researched elsewhere with the aim of economically refining these two useful metals. A tube-in-tube reactor, or a wire-in-tube reactor can be used for this reduction process. These two reactors can be easily modified for continuous processing of either the granular form of the mineral or the metal oxide. The metal oxide will be exposed to the influence of highly active hydrogen atoms and subsequently the oxygen in the metal will be removed. This would not be a problem for those electro-positive elements but would present some difficulty for oxides such as Al and Ti.

The oxygen is strongly bonded with the parent metals such as Al_2O_3 and TiO_2 which cannot be reduced easily. This rudimentary horizontal reactor serves to demonstrate that metal oxide can be refined by exposing it in granular form to plasma discharge irradiation, ultrasonic excitation and in a highly reactive environment containing active hydrogen atoms. Additional hydrogen can be derived from the plasma dissociation of methane gas introduced to the reaction chamber where CO and atomic H are produced. Similarly by plasma dissociation of the methane water mixture that active hydrogen and CO_2 are also produced to supplement the reductive atomic hydrogen. Hydrogen gas can also bubble into the reactor and any excess will be collected and passed back to the reactor.

Reduction of Al_2O_3, TiO_2, TiF_3, TiO, $AlCl_3$ will be taking place in the following manner, where:

$TiO_2 + 4H(2H_2) \rightarrow Ti + 2H_2O$
$Al_2O3 + 6H(3H_2) \rightarrow Al + 3H_2O$
$TiF_3 + 3H(3/2H_2) \rightarrow Ti + 3HF$

The alternative is to have:

$TiO_2 + H_2SO_4 \rightarrow TiOSO4 + H_2O$
$TiOSO_4 + 2H \rightarrow TiO + H_2SO_4$
or $TiO + 2H \rightarrow Ti + H_2O$
and
$TiO_2 + 4HCL \rightarrow TiCl4 + 2H2O$
$TiCl_4 + 4H \rightarrow Ti + 4HCl$
where $TiCl_4$ is ionic and is soluble in water

The above reaction is under the influence of a non-thermal plasma so that the oxide of ores or metal is subjected to a highly catalytic environment and comes into contact with the reactive atomic hydrogen whereby the oxygen will be taken out. To enhance the matter further, the whole reaction process is also subjected to sonic excitation. The fine particles in the colloidal suspension of the granular oxide will collide with each other and at the point of impact, the temperature will rise over 1,500^{O}C to 3,000^{O}C and local melting is reported. The high temperature and pressure of a collapsing sonic bubble will work in conjunction with the plasma glow discharge irradiating the oxide particles with atomic hydrogen with localised high temperature due to collision and cavitations implosion which in the end remove the oxygen. The refined metals will be in powder form down to nano size.

The other method of extracting and refining metals from their oxides is to subject the ionic solution of the metal such as $AlCl_3$ to an electrolysis process which is reported to have achieved efficiency of 3 KWh/Kg of Al. The whole process can be further improved with the plasma electroplating technique with the proposed under-liquid glow plasma discharge. The Al will be deposited on the cathode electrode. Part of the chlorine gas will come out from the anode side and will react with the active hydrogen to form Hcl.

The fine granular metal oxide is placed inside a horizontal reactor on top of cathode electrode. A close matrix separator membrane, used to prevent the metal oxide from crossing over, placed above and below the anode electrode is used to separate it from the cathode. The whole reactor is submerged inside an ultrasonic bath. Ultrasonic waves will penetrate the membrane separator to cause the granular metal oxide in colloidal suspension. The oxide will be subjected to the under-liquid plasma glow discharge irradiation and atomic hydrogen reduction. The percentage of metal oxide being reduced after a period of time is evaluated. Metal oxide of TiO_2 will be put to test. A methane/water mixture will be employed as the liquid medium which will produce larger amount of active atomic hydrogen serving as reduction agents.

DECONTAMINATION OF LIQUID

The problem of pollution is a major issue affecting every living being on this planet. A lot of effort has been expended by Governments, universities and private enterprises, seeking a comprehensive process to deal with a vast variety of pollution issues. Polluting gas emissions from industries and motor vehicles produce large quantities of CO_2 causing global warming; NOx, VOC, and particulates causes cancer and smog; SO_2 causes acid rain. Decontamination of the gases discharged from industries is costly to achieve and what is urgently needed is a comprehensive and economical treatment process to reduce the overall trestment cost. Water contamination is another major issue. Contaminated water unfit for human consumption, enters the sea and kills marine life near the shore. Governments worldwide are passing stringent laws setting a pollution standard, which demands the development of efficient and economic ways to control pollutants. The present proposed invention is put forward as a versatile process, which can treat a variety of contaminants either separately or together.

Corona discharge and glow plasma discharge as non-equilibrium plasma has been developed for applications in the decontamination of a wide range of noxious chemical compounds and recalcitrant chlorinated organic compounds such as dichloro-ethane, pentachlorophenol, perchloroethylene, chlorom, carbon tectrachloride, organochlorine presiticides, endocrine disrupter, dioxin etc. It is also capable of sterilising tough microbial, bacteria and biological contaminants present in ground water such as cryptosporidia parvum. Noxious gas emissions such as NOx and SOx can also be neutralised by passing them through the wet reactor, which includes the removal of particulates as well as the pollution emissions. This is mainly due to the ability of plasma to create a very reactive catalytic environment for those normally very stable and inactive compounds to be reduced, oxidised or neutralised by reacting with the OH* radicals, atomic hydrogen H+ and other oxidative species such as O^-, O_2, O_3, H_2O_2 etc. present and is reported to have high efficiency especially in dealing with diluted contaminants.

Microbial bacteria is removed by both oxidations when they come in contact with the oxidative species such as O_3, O_2^-, O^-, H_2O_2, and OH*. At the same time, they are subjected to the electromechanical stretching of the cell wall, which weakens its oxidative resistance, especially when ultrasonic cavitations, implosions and shock waves created by pulse power, are incorporated into the reactive process. Again reports of over 99% sterilisation are not uncommon.

At the present, most of the treatment work is conducted in a gaseous environment, by spraying or vaporising the contaminated liquid over the plasma discharging electrodes, or by producing plasma discharge irradiating over the surface of a liquid which contains the undesirable contaminants, or by passing the polluted gas through a dry reactor sometimes mixed with water vapour or using plasma torch irradiation of the polluted object.

A surface water contact plasma glow discharge system has also been developed as a decontamination process under the name “Plasmate”. Under water plasma by pulsed high voltage electric discharge with high current input to dissociate the water to produce H and OH* radicals to treat bacterial and microbial decontamination has also been reported as being successful.

The proposed under-liquid plasma is a low energy consumption system, which produces steady plasma by utilising the present of bubbles. The voltage required for dealing with a wide range of liquids having variable electrolytic properties, ranges from 350 V to 3,000 V and current intensity ranging from 1 to 2 Amp/cm^2. It produces a highly reactive environment with a supply of oxidative radicals and reductive atomic hydrogen spread over a large volume of liquid, making it highly effective as a decontaminatinf process, and one which is also both economic and easy to operate.

The under-liquid plasma has the advantage of being able to decontaminate several pollutants at the same time and it also has a very active gas and liquid interaction which makes it highly effective as a treatment process. Liquid waste, containing harmful chemical, bacteria, microbial, heavy metals, noxious gas, polluted air and odour can be treated in the same reactor simultaneously.

Recalcitrant organic chlorinated materials in water, which include dichloromethane, pentachlorophenol, chloroform and carbon tetrachloride, will either be oxidised or degraded to CO_2 and chlorine. While the pathogens in drinking water such as cryptosporidia with thick phospholipids wall protecting the trophs is in the first place being stretched and weakened and subsequently broken down by the oxidising species. Some of the oxidative species such as OH radicals, O^-, O_2^-, and O_3 are present in quantity and are more active than chlorine and other mild oxidants. It has the advantage that no chemical is needed as an oxidation agent, which can sometimes result in secondary pollution.

Heavy metals in dilute solution, can be extracted or removed through a simple electrolysis process by turning the metal to hydroxide which could than be removed by filter. Soluble metal ions can also be extracted by deposition on to the cathode electrode, which can be further facilitated by the plasma electroplating process owned by the inventor, and which uses the same under-liquid bubble plasma process.

The treatment of NO, SO_2 and particulates is to pass the polluted gas through the reactor where the particulate will be removed and the NO is either oxidised to become NO_2 or NO_3 by O^-, or O_3. It can also be reduced to N by the active hydrogen. NO_3 will react with water to become nitric acid. NO_2 is not considered to be a noxious gas. SO_2 reacting with O_3 or oxygen radical to form SO_3 can be easily oxidised and then react with water to become H_2SO_4 (sulpheric acid). When the said gas is introduced to the reactor it can be utilised as a gas bubble for plasma discharge especially when this gas bubble is collected or retained near the electrodes.

The effectiveness of non-thermal plasma discharge in treating carcinogenic organic compounds and pollutant gases is well established. Removal or reduction of the amount of heavy metals, arsenic and mercury to an acceptable safe low concentration level from or in water, have been successfully carried out by a simple electrolysis process. The extraction efficiency is further improved by the presence of an under-liquid plasma discharge where some of them will readily react with the OH radicals to become metal hydroxide or to be deposited by the very active plasma electroplating (deposition) method which has been adequately proven as a useful technique.

Further experiments in this area are unnecessary. Adequate information can be drawn upon from much research work which already been carried out. Concentrated effort has already been used to search for a better way of generating steady plasma glow discharge under-liquid by utilising the bubbles which will enable the manufacturing of a simple and economic reactor which requires only low power input and wich will work well in treating a wide scope of contaminants.

Sterilisation of drinking water at municipal scale can be simplified by adopting the under-liquid plasma discharge which will effectively neutralise and degrade carcinogen organic compounds in the water by creating the dissociation and active catalytic environment which encourages the breakdown of the inert chemicals and at the same time subject it to the active reductive and oxidative radicals. The heavy metals dissolved in the water will also be removed or reduced in the same time through the plasma electrolysis and electroplating as described previously. The biological contaminants will be sterilised by the highly oxidative environment existing during the glow discharge. The effectiveness of the combined treatment to produce potable water fit for human consumption is further enhanced by the adoption of ultrasonic cavitation and shock waves with a pulsed power supply.

The entire sterilisation process does not require any added chemicals such as ozone, chlorine or any electrolytic additive. The impurity in the pre-treated liquid will be adequate to serve as conductor for the under-water plasma discharge to take place. Any excessive ozone, which has not been used up in the oxidation process during the plasma discharge, will be easily neutralised by the presence of active hydrogen atoms. Hydroxyl radicals (OH) are one of the most aggressive oxidising agents, which being produced in quantity will do most of the useful work. There will be no chlorine remnant left in the water, as it is unnecessary.

The under-liquid plasma technique will be useful in food industries for low temperature sterilisation and removal of odour. The same method may also find its use in the paper-making industry in fragmentation and de-lignification of the fluidised pulps, treating the highly polluted discharge, and treating fabrics and dyes in the textiles industry.

There are several types of reactors which can be employed in the decontamination process. The separation membrane diaphragm in the wire-in-tube and tube-in-tube reactor is no longer required. Other reactors such as the transverse-flow reactor and the tower reactor can also be adopted.

The reactor can be arrange in such way that the plasma discharge occurs either at the cathode or at the anode provided that a good gas-trapping cover is provided on the electrode. Since much of the decontamination action relies on the presence of strong oxidation agents such as hydroxyl radicals, atomic oxygen, ozone, singlet oxygen and hydroperoxyl radicals, plasma discharge on the side of anode electrode enhanced with the gas retaining cover will cause the formation of said species represented by the following equations:

$H_2O + e \rightarrow +OH + H + e$	dissociation
$H_2O + e \rightarrow + H_2O_+ + 2e$	ionisation
$H_2O_+ + H_2O \rightarrow H_3O_+ + OH$	dissociation
$O_2 + e \rightarrow O_2^* + e$	excitation
$O_2 + e \rightarrow +2O + e$	dissociation
$O_2 + e \rightarrow O- + O$	dissociation
$O_2 + O \rightarrow O_3$	association
$OH + OH \rightarrow H_2\,O_2$	association

Some chemical contaminants can only be broken down by reduction with active atomic hydrogen, which would require plasma discharge at the cathode electrode. In the tower reactor (**Fig.7**) and transverse-flow reactor (**Fig.6**) it is possible to have the gas-retaining cover on one side of electrode facing the side of the opposite electrode with the gas-retaining covers, so that an alternating zone of oxidation and reduction is created in the reactors to deal with a variety of contaminants.

Production of hydrogen by plasma dissociation of water molecules is the result of electron collisions, which is different from the conventional electrolysis, which separates the dipole water molecules by electro-induction. They also have different sets of requirements to dissociate water molecules for the production of hydrogen:

Conventional electrolysis	Plasma glow discharge under water, according to the present invention
1. Low voltage and high current density	High voltage and relatively low current density
2. High concentration of electrolyte (up to 25% KOH)	Low concentration electrolyte (0.01% KOH) low electrolytic requirement
3. Avoid bubble attachment to the electrodes	Bubbles smothering the electrodes is welcome to create a dielectric barrier.
4. Electrode space distance is not restricted.	Electrode space distance has to keep close as far as possible.
5. Water molecules is split by induction	Water molecules are dissociated by electron collision.
6. Large production unit is required for efficiency and productivity	Small production unit favours the decentralisation of production.

The reactors and gas-trapping and retaining structures enclosing the electrode is made of perspex plastic. No sign of burning is observed in the plastic covering plate directly over the discharging electrode and the light emission is an orange/red colour (burning of hydrogen) which is distinctively different from the plasma arc which is bright blue colour when the voltage is brought beyond the glow discharge voltage level. A burn mark will be observed after plasma arc discharge. This proves that the plasma glow discharge with it’s orange yellow colour, is non-thermal in nature.

Applicant also conducted experiments with the same equipment utilising the under-liquid plasma to sterilise mulberry juice. Applicant found that the plasma was effective in reducing the bacterial count and the mold colony count in the juice. After 40 minutes the counts of both bacteria and mold had been reduced substantially to less than 100 per ml. This demonstrates that the invention could be used to sterilise potable water, waste water, food, and liquid food and others.

CONCLUSION

A further advantage of the method described above is that plasma can be generated with relative ease within bubbles in the aqueous medium. It does not require excessive amounts of energy and can be done at atmospheric pressure. It certainly does not require a vacuum chamber.

A further advantage of the invention is that it provides a method of treating aqueous waste which contains components that cannot be neutralised or otherwise rendered harmless by the addition of chemicals to the liquid.

It will of course be realised that the above has been given only by way of illustrative example of the invention and that all such modifications and variations thereto as would be apparent to persons skilled in the art are deemed to fall within the broad scope and ambit of the invention as herein set forth.

Figures which are included in the patent application but which are not directly referenced in it:

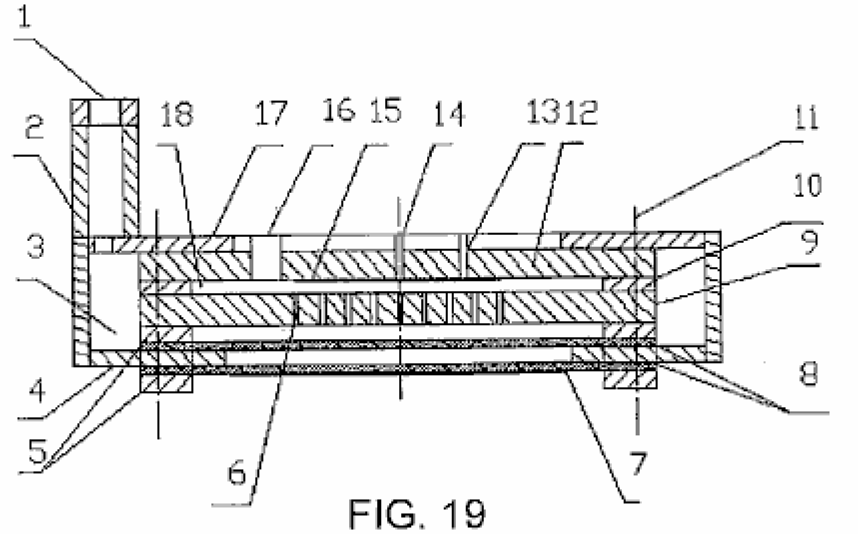

FIG. 19

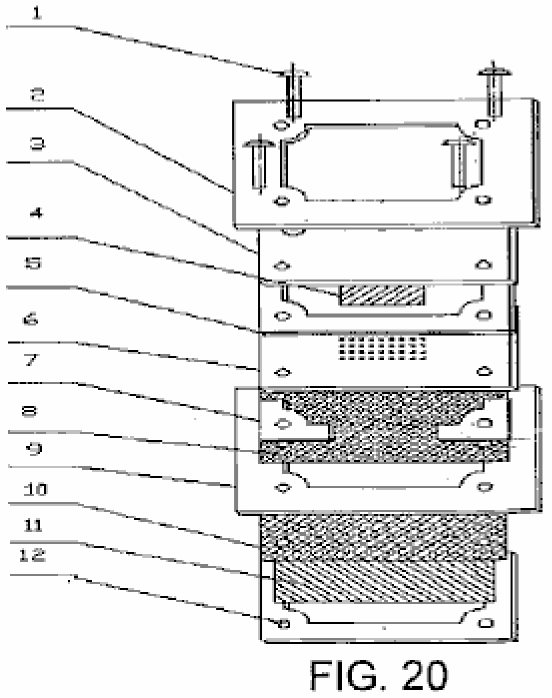

FIG. 20

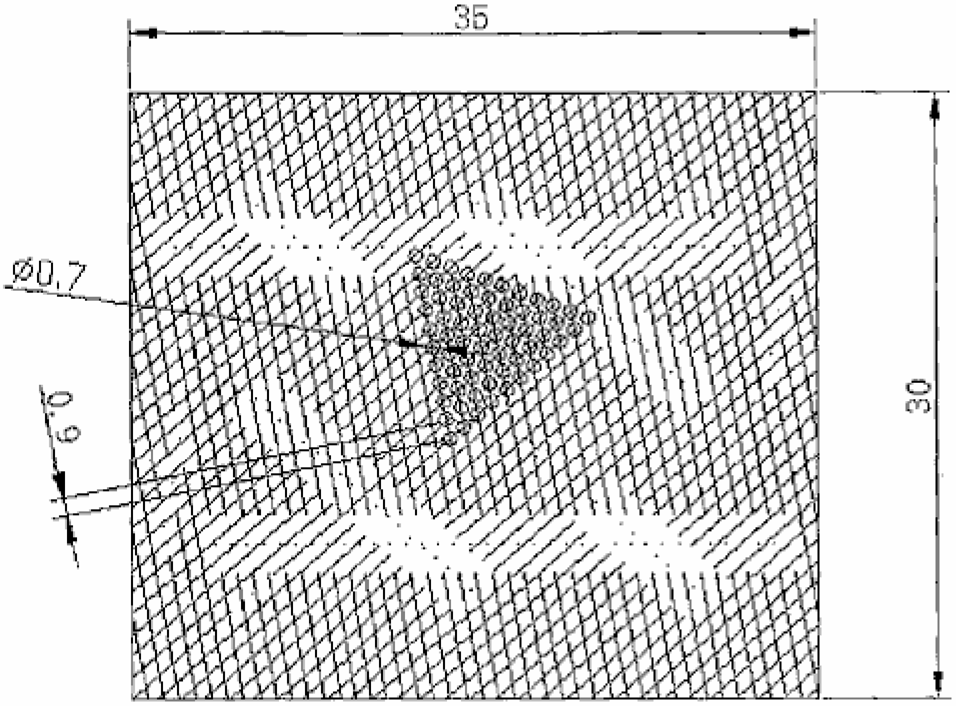

FIG. 21

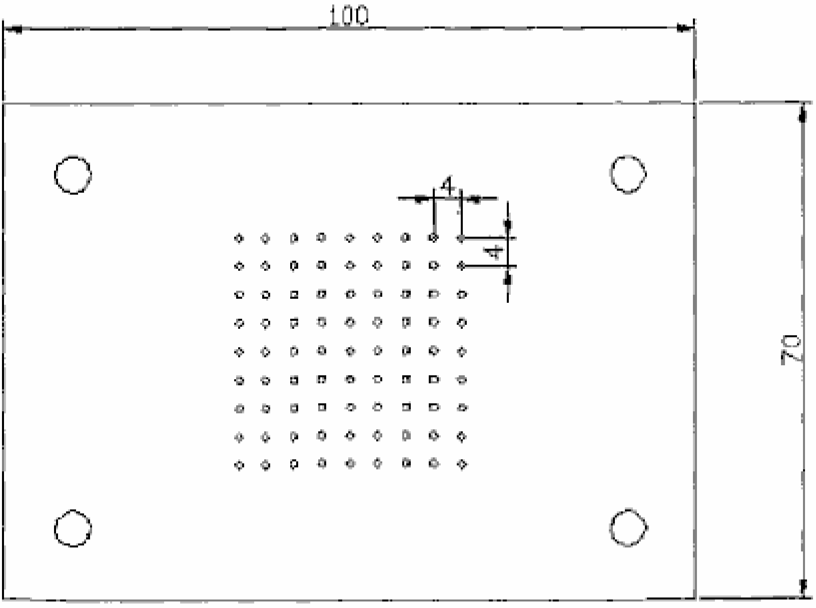

FIG. 22

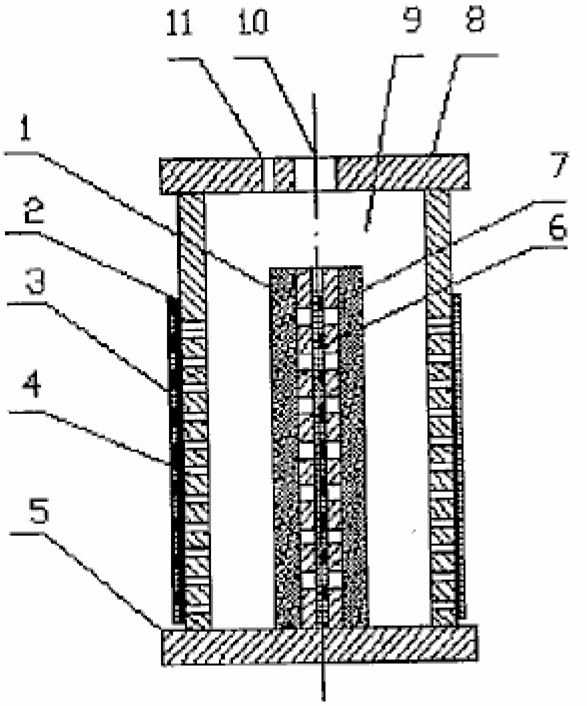

FIG. 23

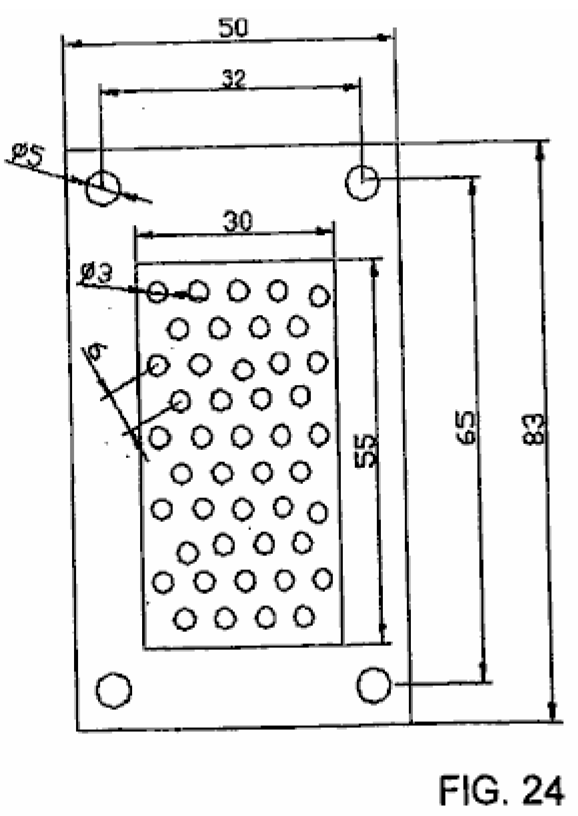

FIG. 24

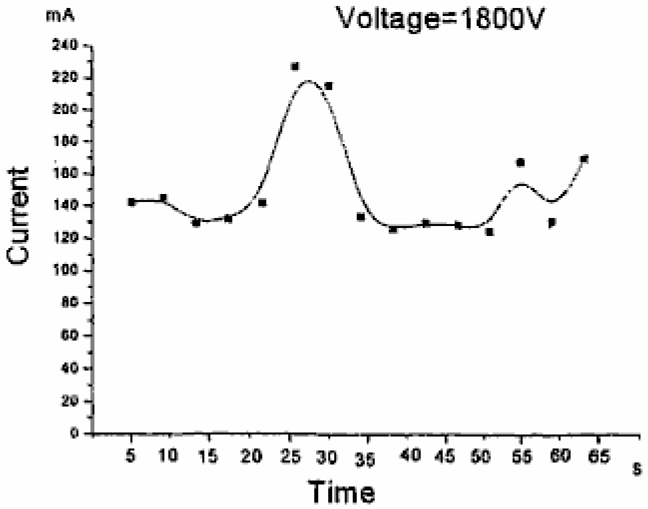

Glow discharge at stable 1800V voltage input

FIG. 26

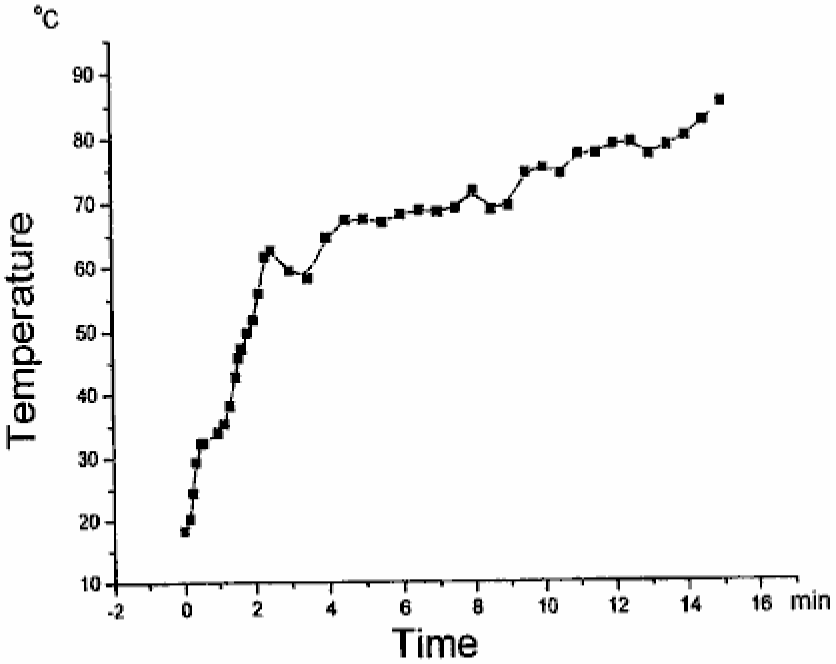

Temperature measured in the cathode electrodes

FIG. 27

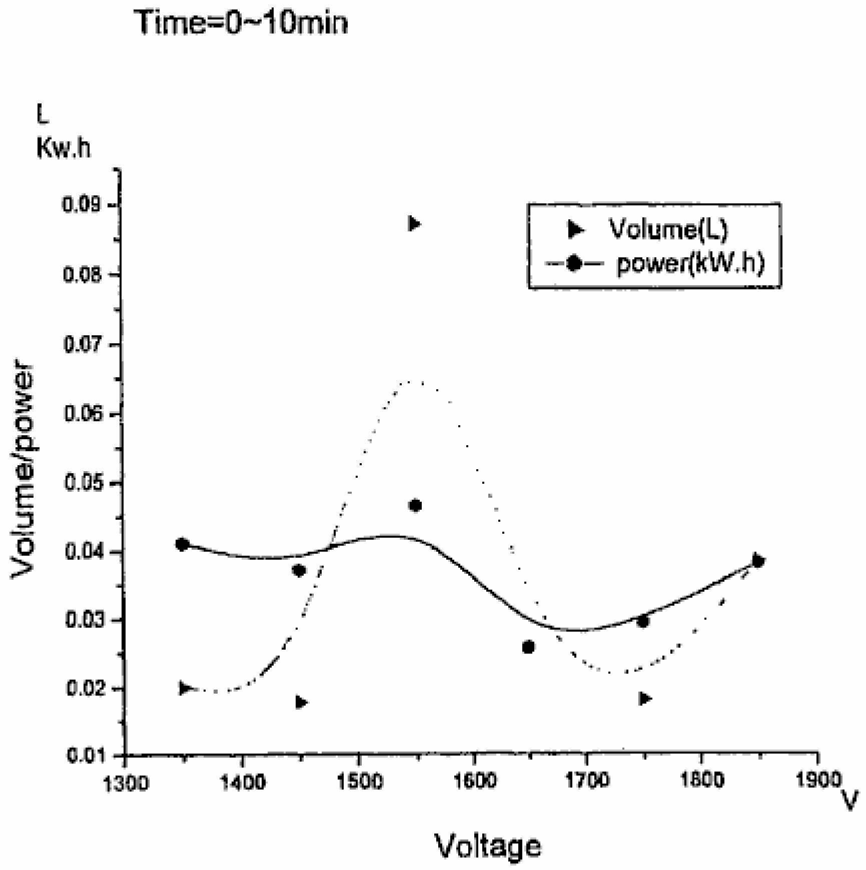

Time=0~10min
L
Kw.h
Volume/power
0.09
0.08
0.07
0.06
0.05
0.04
0.03
0.02
0.01
Volume(L)
power(kW.h)
1300
1400
1500
1600
1700
1800
1900
V
Voltage

FIG. 29

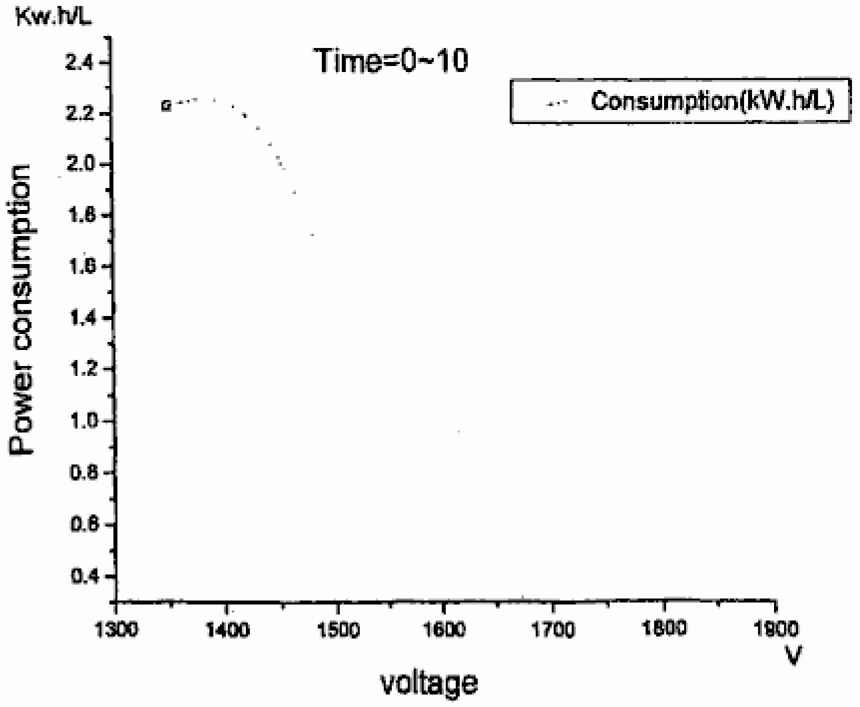

Kw.h/L
Time=0~10
Consumption(kW.h/L)
Power consumption
2.4
2.2
2.0
1.8
1.6
1.4
1.2
1.0
0.8
0.6
0.4
1300
1400
1500
1600
1700
1800
1900
V
voltage

FIG. 30

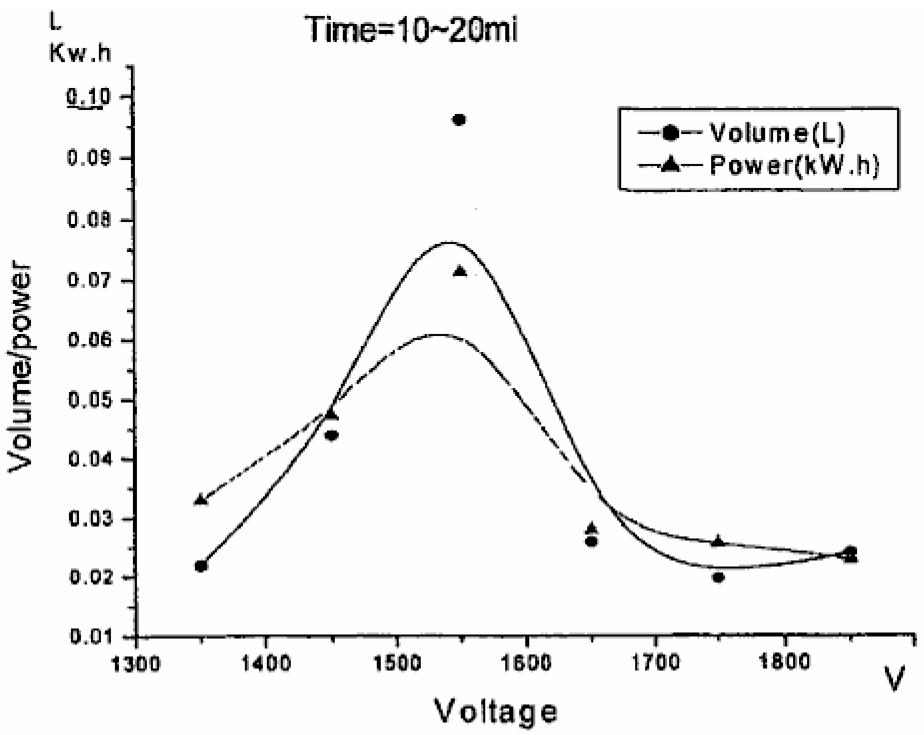
L
Kw.h
Time=10~20mi
Volume(L)
Power(kW.h)
Volume/power
0.10
0.09
0.08
0.07
0.06
0.05
0.04
0.03
0.02
0.01
1300
1400
1500
1600
1700
1800
V
Voltage

FIG. 31

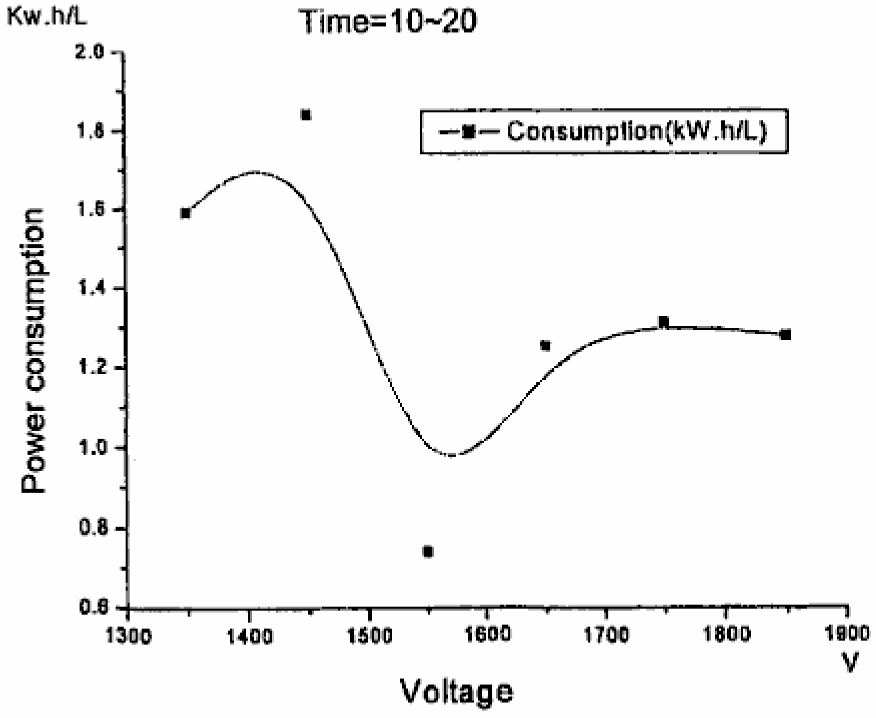
Kw.h/L
Time=10~20
Consumption(kW.h/L)
Power consumption
2.0
1.8
1.6
1.4
1.2
1.0
0.8
0.6
1300
1400
1500
1600
1700
1800
1900
V
Voltage

FIG. 32

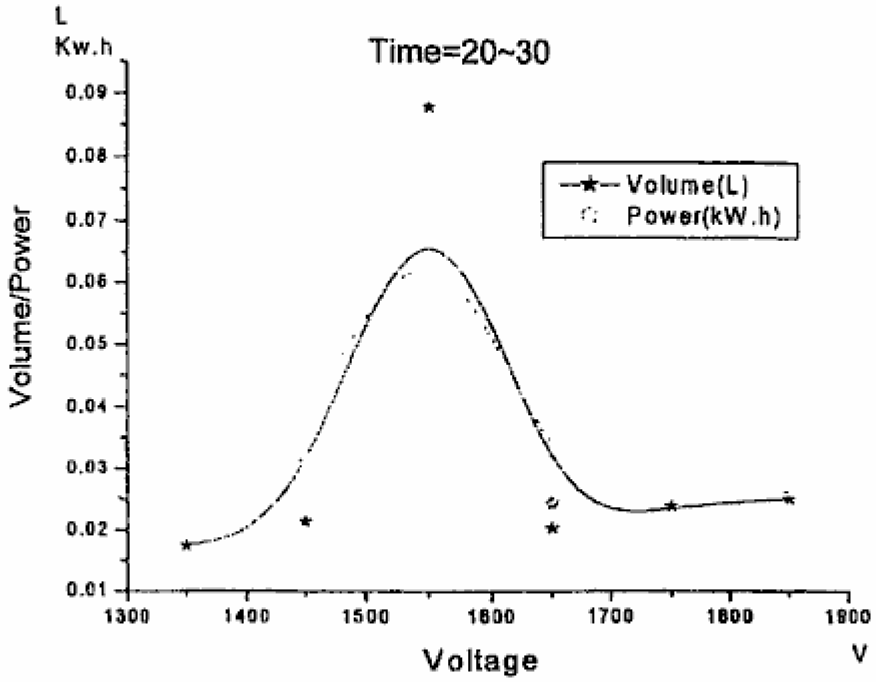
L
Kw.h
Time=20~30
0.09
0.08
0.07
0.06
0.05
0.04
0.03
0.02
0.01
Volume/Power
Volume(L)
Power(kW.h)
1300
1400
1500
1600
1700
1800
1900
Voltage
V

FIG. 33

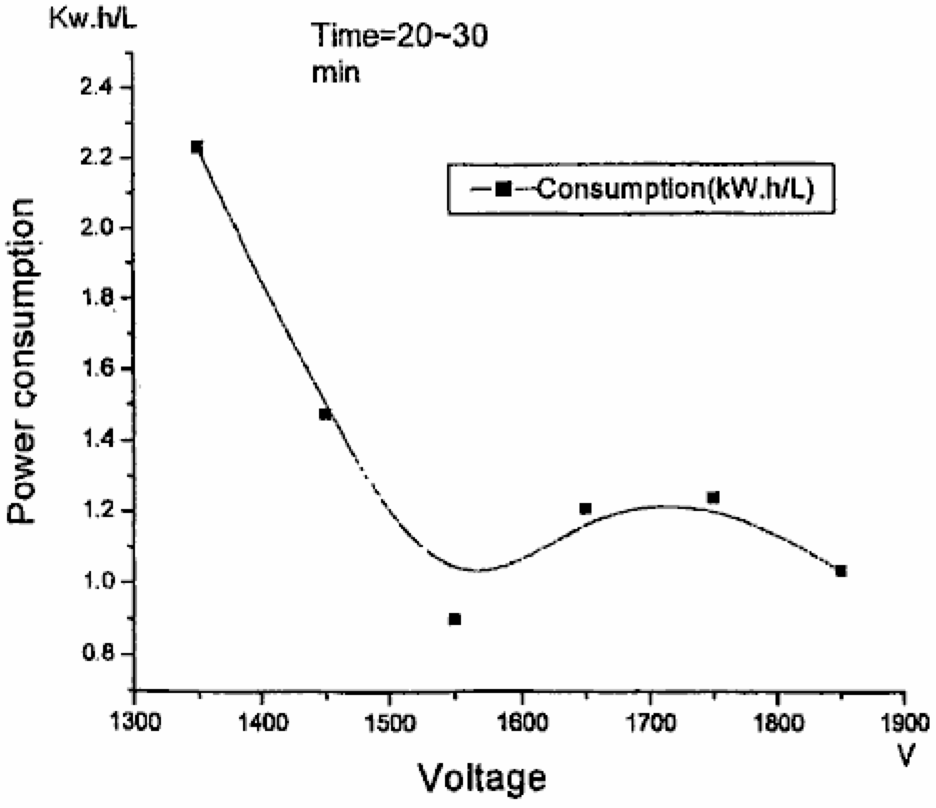
Kw.h/L
Time=20~30
min
2.4
2.2
2.0
1.8
1.6
1.4
1.2
1.0
0.8
Power consumption
Consumption(kW.h/L)
1300
1400
1500
1600
1700
1800
1900
V
Voltage

FIG. 34

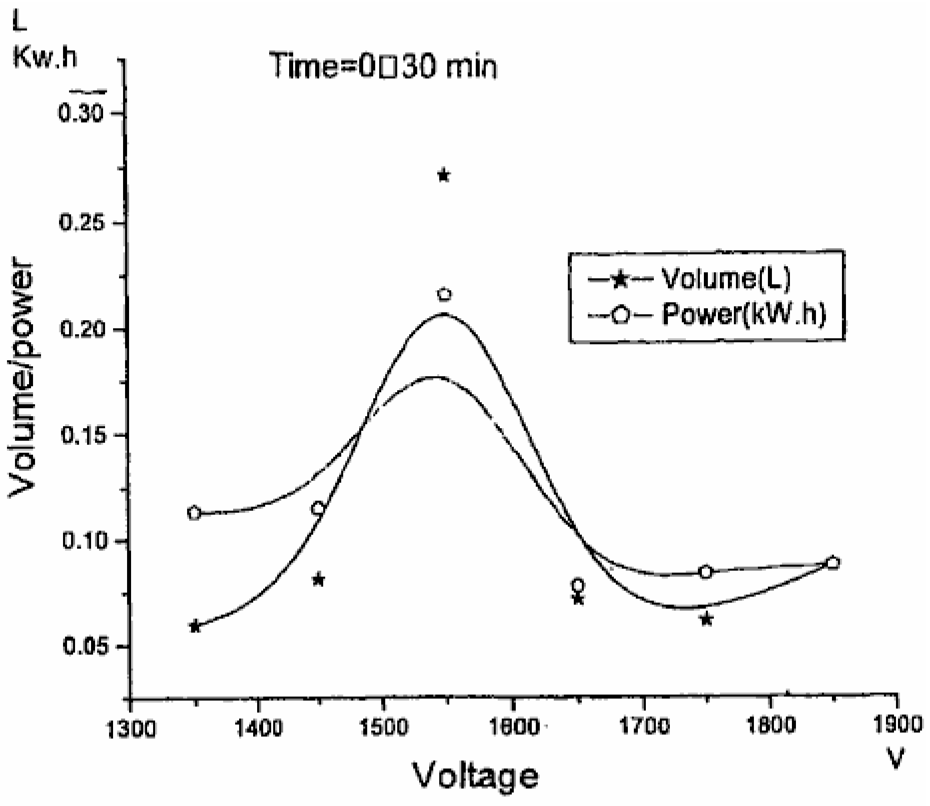
L
Kw.h
Time=0□30 min
0.30
0.25
0.20
0.15
0.10
0.05
Volume/power
—★— Volume(L)
—○— Power(kW.h)
1300
1400
1500
1600
1700
1800
1900
V
Voltage

FIG. 35

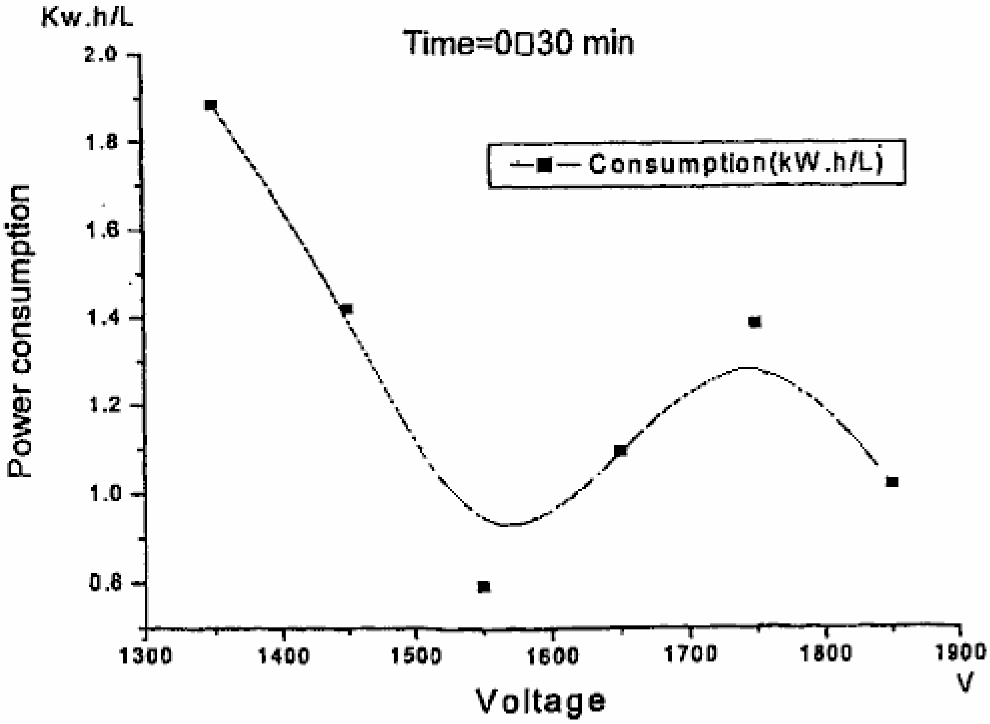
Kw.h/L
Time=0□30 min
2.0
1.8
1.6
1.4
1.2
1.0
0.8
Power consumption
—■— Consumption(kW.h/L)
1300
1400
1500
1600
1700
1800
1900
V
Voltage

FIG. 36

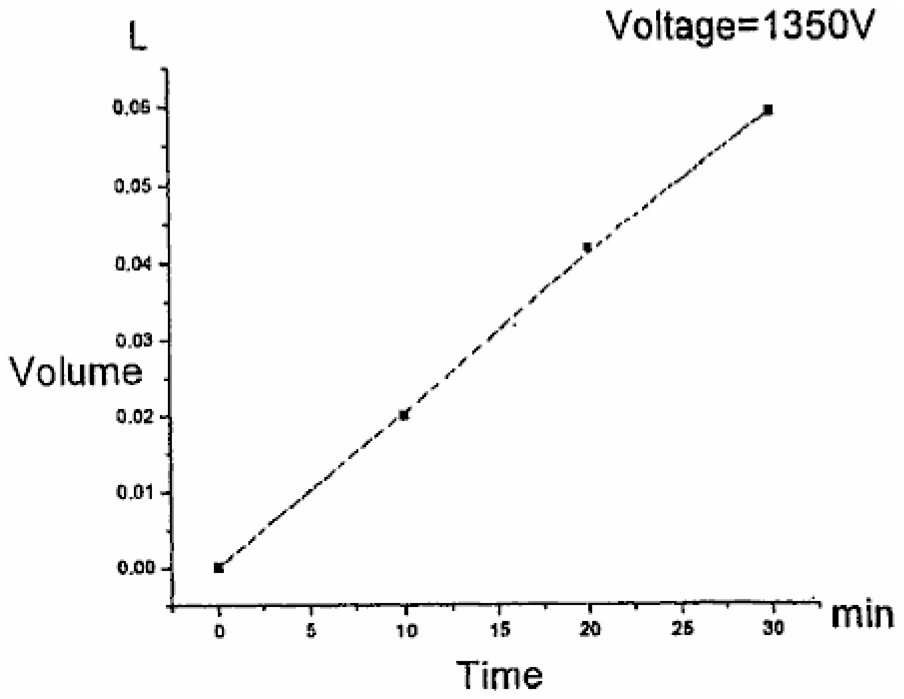
Voltage=1350V
L
0.06
0.05
0.04
0.03
Volume
0.02
0.01
0.00
0
5
10
15
20
25
30
min
Time

FIG. 37

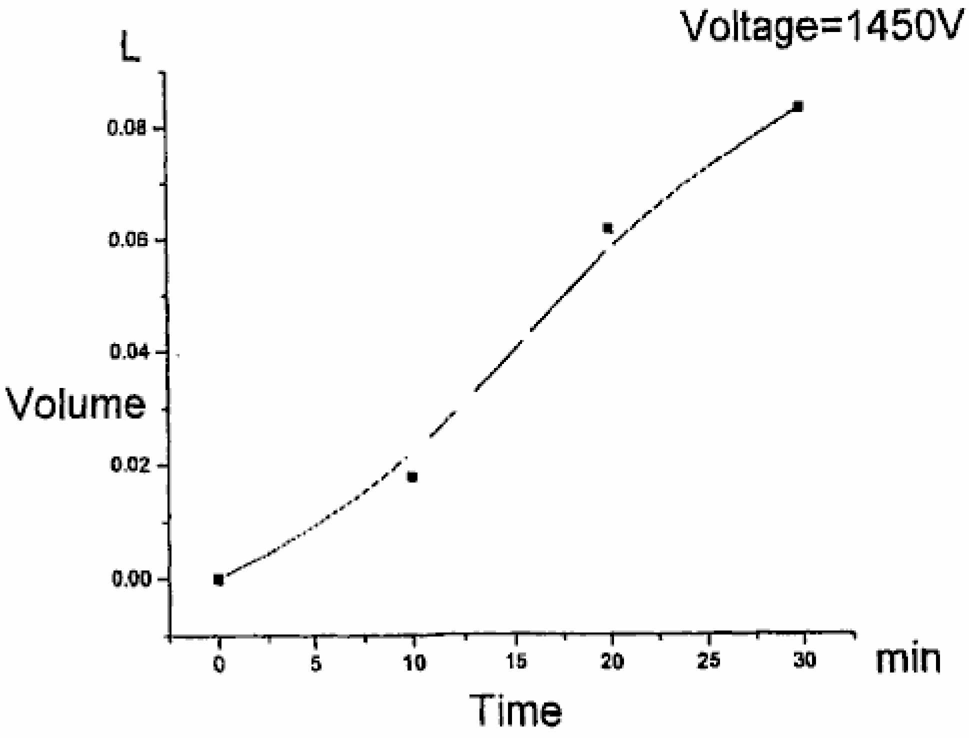
Voltage=1450V
L
0.08
0.06
0.04
Volume
0.02
0.00
0
5
10
15
20
25
30
min
Time

FIG. 38

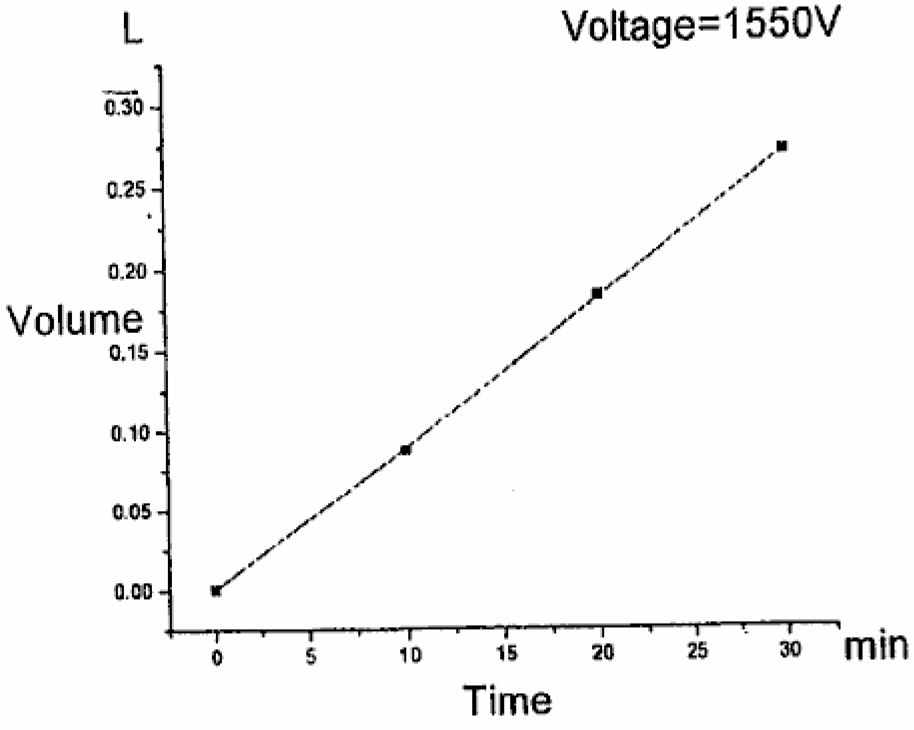
L
Voltage=1550V
0.30
0.25
0.20
Volume
0.15
0.10
0.05
0.00
0
5
10
15
20
25
30
min
Time

FIG. 39

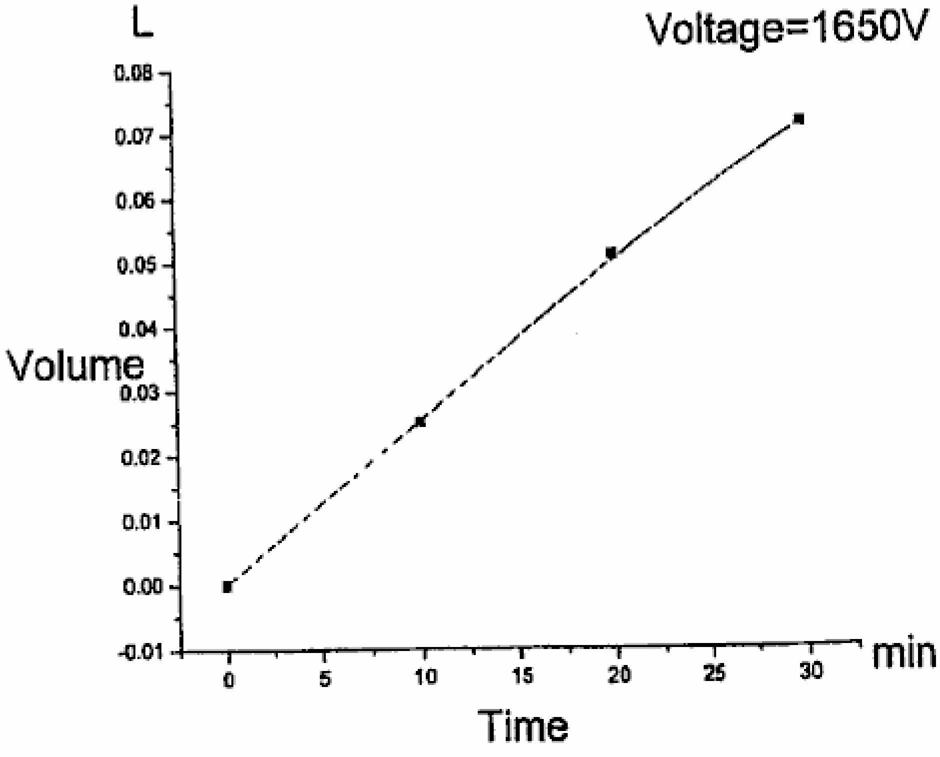
L
Voltage=1650V
0.08
0.07
0.06
0.05
0.04
Volume
0.03
0.02
0.01
0.00
-0.01
0
5
10
15
20
25
30
min
Time

FIG. 40

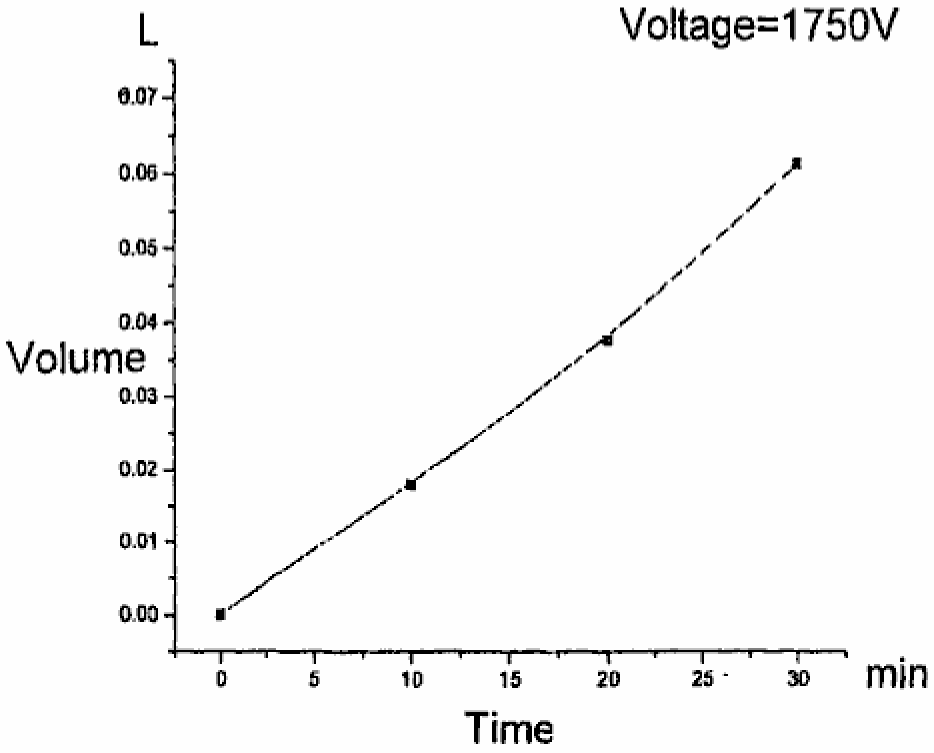
L
Voltage=1750V
0.07
0.06
0.05
0.04
Volume
0.03
0.02
0.01
0.00
0
5
10
15
20
25
30
min
Time

FIG. 41

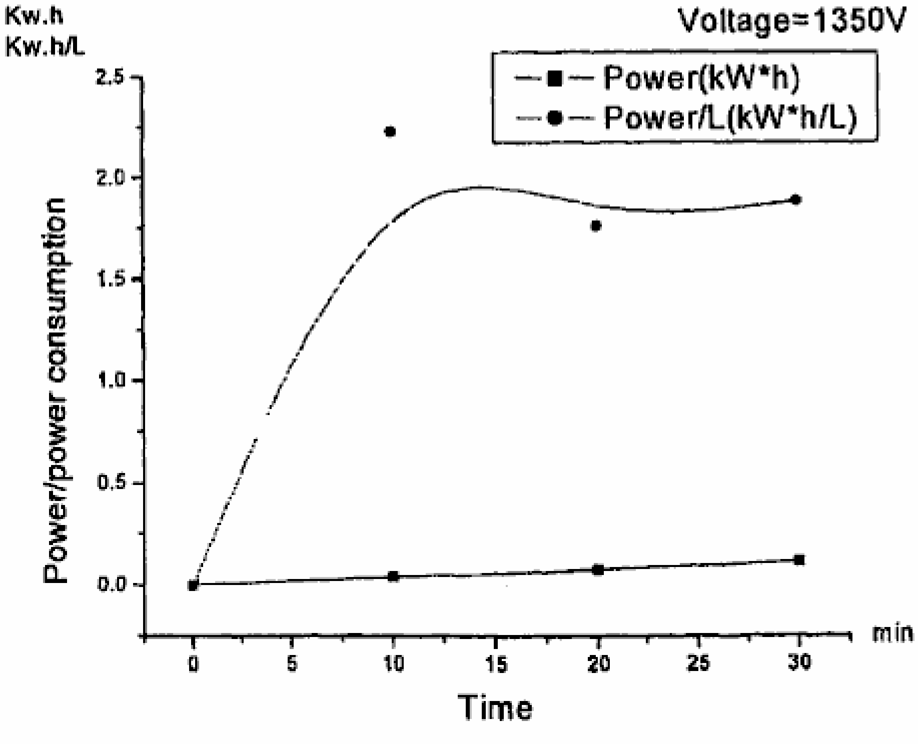
Kw.h
Kw.h/L
Voltage=1350V
—■— Power(kW*h)
—●— Power/L(kW*h/L)
2.5
2.0
1.5
1.0
0.5
0.0
Power/power consumption
0
5
10
15
20
25
30
min
Time

FIG. 42

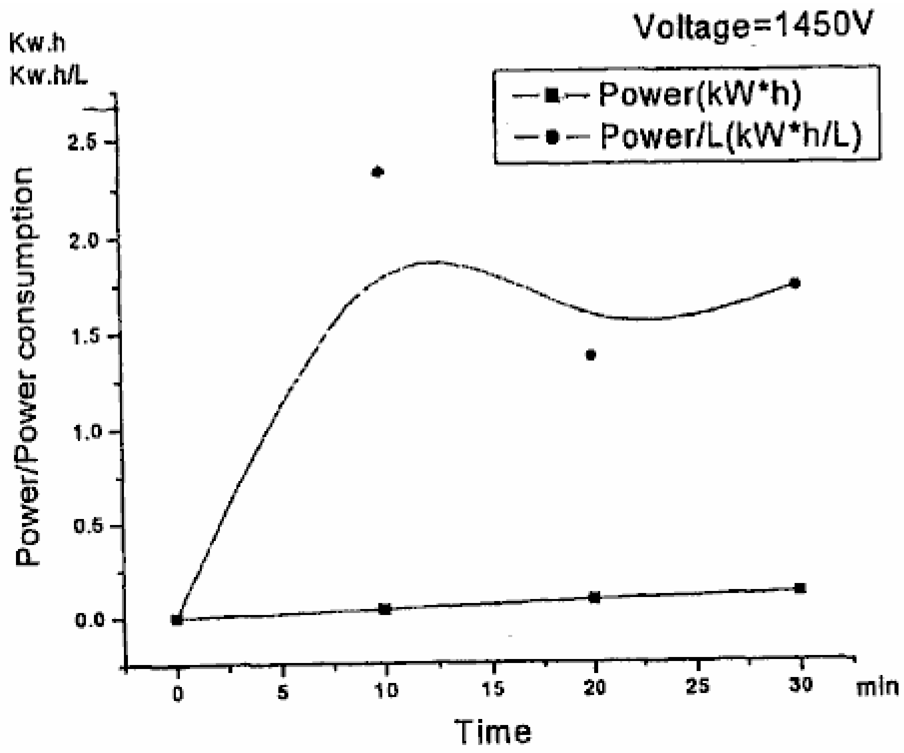
Voltage=1450V
Kw.h
Kw.h/L
Power(kW*h)
Power/L(kW*h/L)
Power/Power consumption
2.5
2.0
1.5
1.0
0.5
0.0
0
5
10
15
20
25
30
min
Time

FIG. 43

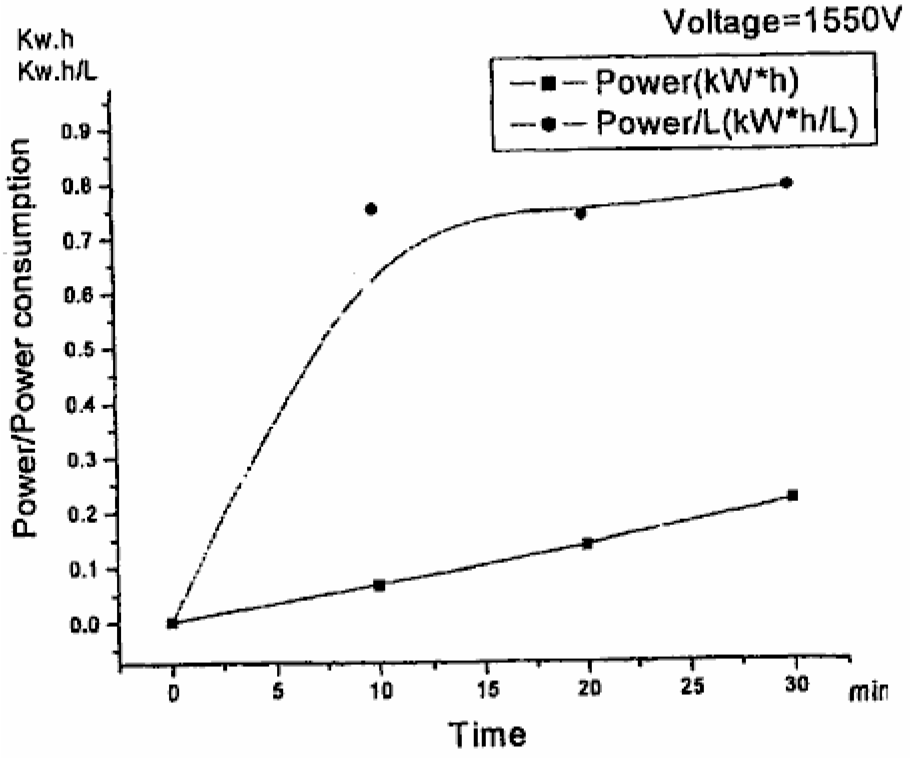
Voltage=1550V
Kw.h
Kw.h/L
Power(kW*h)
Power/L(kW*h/L)
Power/Power consumption
0.9
0.8
0.7
0.6
0.5
0.4
0.3
0.2
0.1
0.0
0
5
10
15
20
25
30
min
Time

FIG. 44

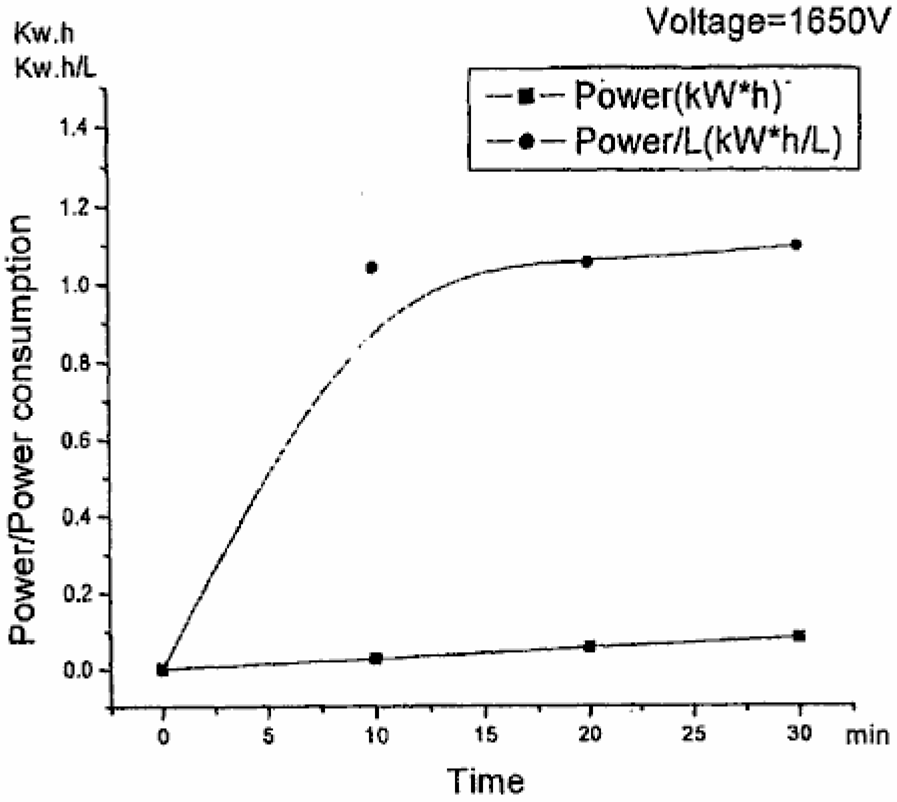
Voltage=1650V
Kw.h
Kw.h/L
—■— Power(kW*h)
—●— Power/L(kW*h/L)
Power/Power consumption
1.4
1.2
1.0
0.8
0.6
0.4
0.2
0.0
0
5
10
15
20
25
30
min
Time

FIG. 45

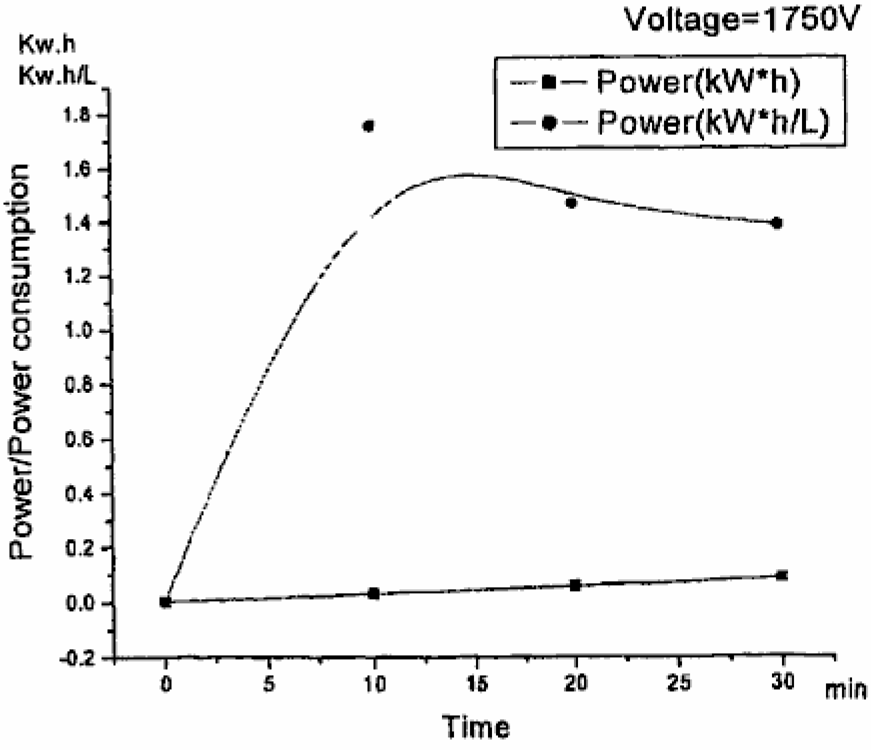
Voltage=1750V
Kw.h
Kw.h/L
—■— Power(kW*h)
—●— Power(kW*h/L)
Power/Power consumption
1.8
1.6
1.4
1.2
1.0
0.8
0.6
0.4
0.2
0.0
-0.2
0
5
10
15
20
25
30
min
Time

FIG. 46

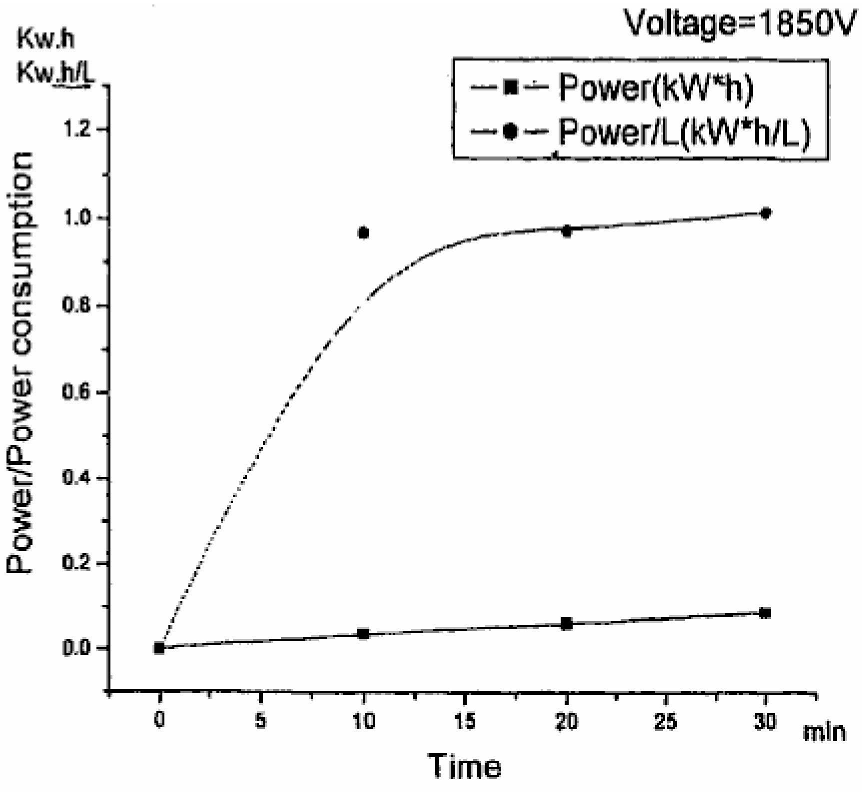
Voltage=1850V
Kw.h
Kw.h/L
Power/Power consumption
—■— Power(kW*h)
—●— Power/L(kW*h/L)
1.2
1.0
0.8
0.6
0.4
0.2
0.0
0
5
10
15
20
25
30
min
Time

FIG. 47

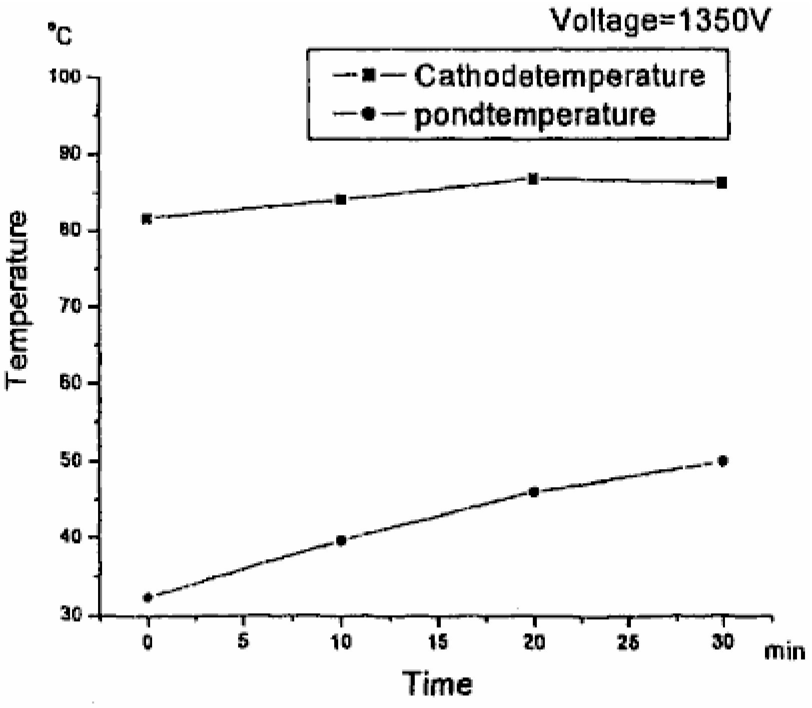
Voltage=1350V
°C
Temperature
—■— Cathodetemperature
—●— pondtemperature
100
90
80
70
60
50
40
30
0
5
10
15
20
25
30
min
Time

FIG. 48

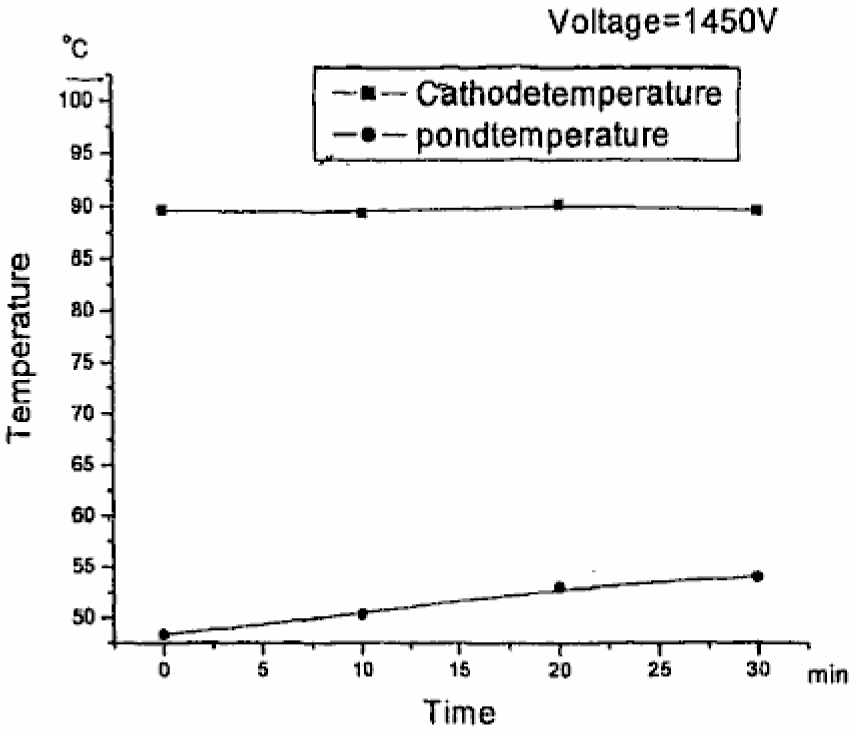
Voltage=1450V
°C
Cathodetemperature
pondtemperature
100
95
90
85
80
75
70
65
60
55
50
Temperature
0
5
10
15
20
25
30
min
Time

FIG. 49

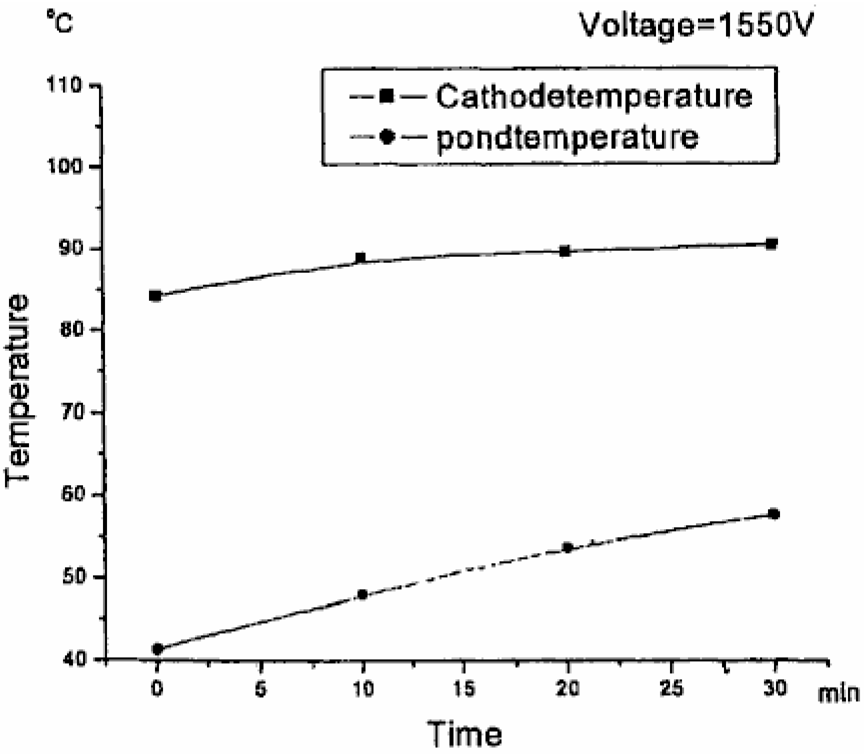
°C
Voltage=1550V
Cathodetemperature
pondtemperature
110
100
90
80
70
60
50
40
Temperature
0
5
10
15
20
25
30
min
Time

FIG. 50

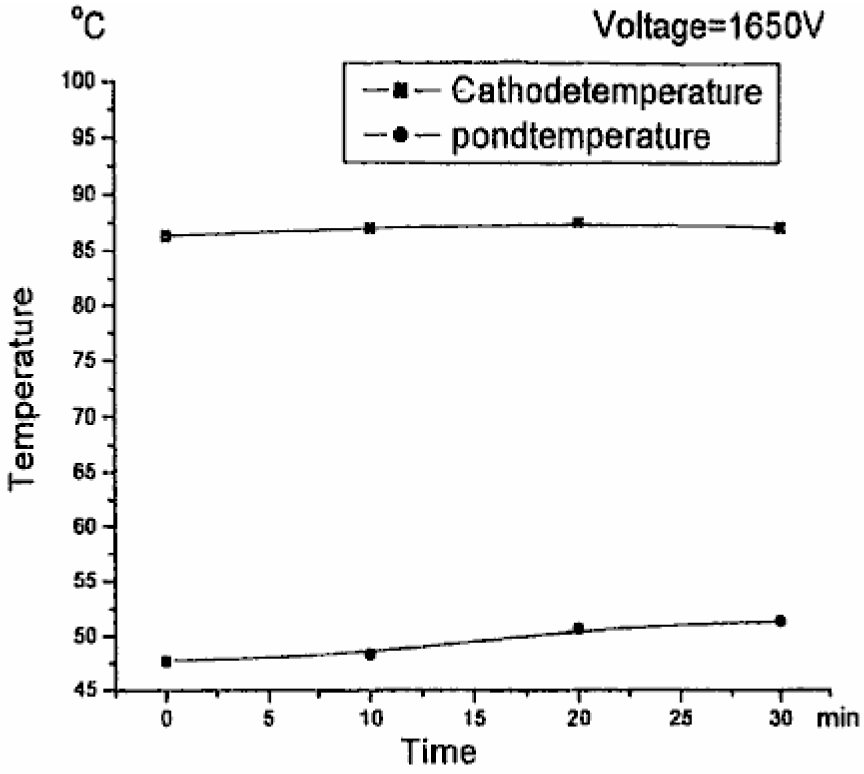
°C
Voltage=1650V
Cathodetemperature
pondtemperature
Temperature
100
95
90
85
80
75
70
65
60
55
50
45
0
5
10
15
20
25
30
min
Time

FIG. 51

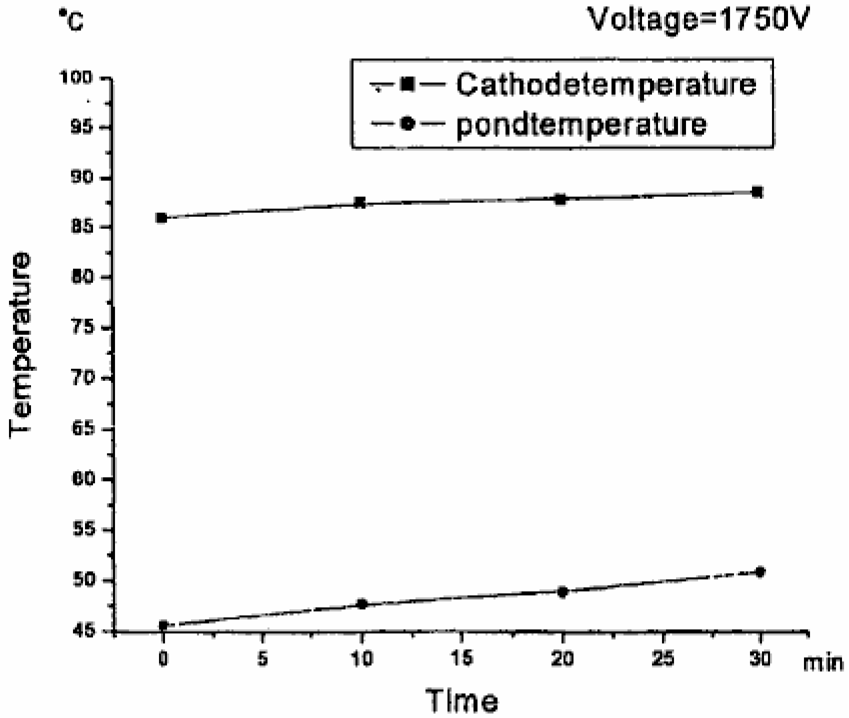
°C
Voltage=1750V
Cathodetemperature
pondtemperature
Temperature
100
95
90
85
80
75
70
65
60
55
50
45
0
5
10
15
20
25
30
min
Time

FIG. 52

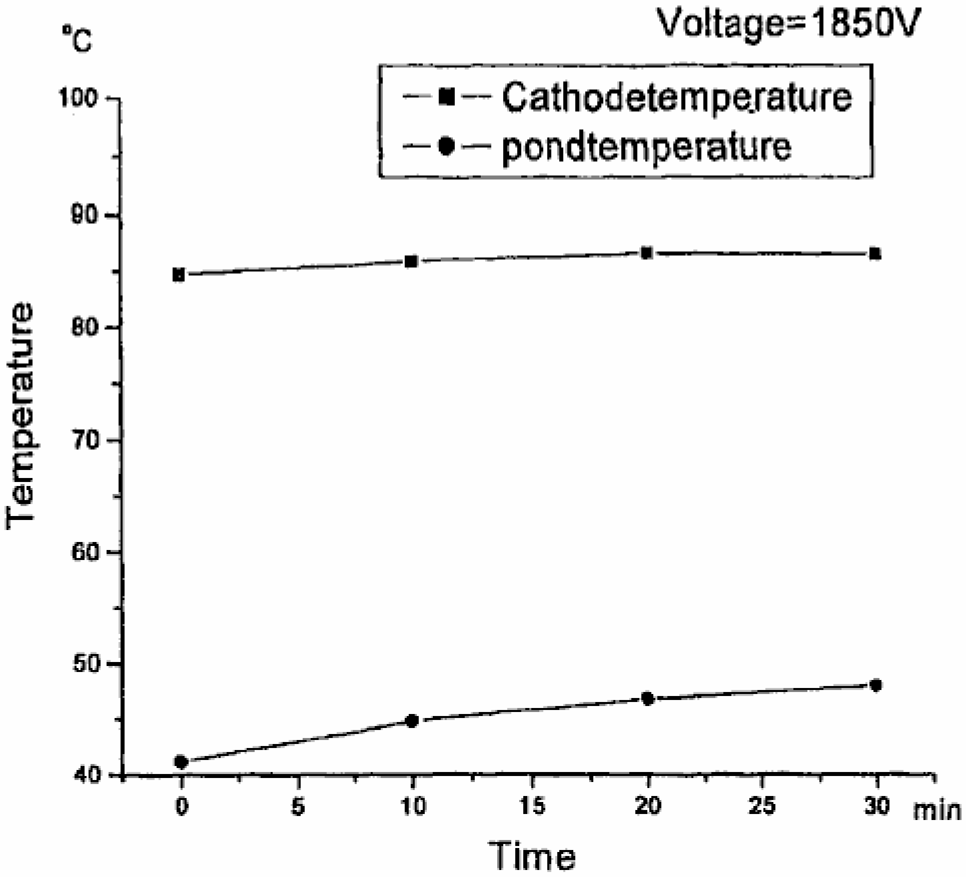
Voltage=1850V
°C
100
90
80
70
60
50
40
Temperature
—■— Cathodetemperature
—●— pondtemperature
0
5
10
15
20
25
30
min
Time

FIG. 53

Juan Aguero's Water-Fuel Engine

Patent Application EP0405919 1st February 1991 Inventor: Juan C. Aguero

WATER-PROPELLED INTERNAL-COMBUSTION ENGINE SYSTEM

Please note that this is a re-worded excerpt from this patent application. It describes a method which it is claimed is capable of operating an internal combustion engine from a mixture of steam and hydrogen gas.

ABSTRACT

This is an energy-transforming system for driving, for instance, an internal combustion engine which uses hydrogen gas as its fuel. The gas is obtained by electrolysing water on board and is then injected into the combustion chambers. The electrolysis is carried out in an electrolytic tank **15,** energised with electric current generated by the engine. The hydrogen passes from a reservoir **23,** via collector cylinder **29,** to carburettor device **39**. The hydrogen is then fed into the engine together with dry saturated steam and at least part of the hydrogen may be heated **51** prior to admission. A cooler and more controlled combustion is achieved with the steam and furthermore relatively lesser amounts of hydrogen are required. This is probably caused by the steam acting as a temperature moderator during admission and combustion of the hydrogen and additionally expanding during the expansion stroke.

FIELD OF THE INVENTION

The present invention refers to energy-converter systems, in particular related to an internal combustion engine fuelled by hydrogen gas, i.e. wherein the main propellant admitted to the combustion chambers is hydrogen. More particularly still, the present invention refers to method and means for obtaining hydrogen gas in an efficient and reasonably economical manner, and for supplying the gas to the combustion chambers under conditions for controlled ignition and optimum energy conversion. The present invention also refers to means and method for running an internal-combustion engine system from an available, cheap and non-contaminant hydrogen containing matter such as water as a fuel supply.

In general, the invention may find application in any system employing internal combustion principles, ranging from large installations such as electricity works to relatively smaller automobile systems like locomotives, lorries, motor-cars, ships and motor-boats. In the ensuing description, the invention is generally disclosed for application in the automotive field, however its adaptation and application in other fields may also be considered to be within the purview of the present invention.

BACKGROUND

Dwindling natural resources, dangerous contamination levels, increasing prices and unreliable dependence on other countries are making it increasingly necessary to search an alternative to fossil fuels like oil (hydrocarbons) and oil derivatives as the primary energy source in automobiles. To date, none of the attempted alternatives appears to have proved its worth as a substitute for petrol, either because of inherent drawbacks as to contamination, safety, cost, etc. or because man has not yet been able to find a practical way of applying the alternative energy forms to domestic motor cars.

For instance, electricity is a good alternative in the ecological sense, both chemically and acoustically, however it appears to be the least efficient form of energy known, which together with the high cost of manufacture of electric motors and the severe storage limitations insofar capacity and size have stopped it from coming into the market at least for the time being. The same is generally true even when solar energy is concerned.

Nuclear power is efficient, available and relatively cheap, but extremely perilous. Synthetic fuels may certainly be the answer in the future, however it appears that none practical enough have been developed. Use of gases such as methane or propane, or of alcohol distilled from sugar cane, has also been tried, but for one reason or another its marketing has been limited to small regions. Methanol for instance is a promising synthetic fuel, but it is extremely difficult to ignite in cold weather and has a low energy content (about half that of petrol).

The use of hydrogen gas as a substitute for petrol has been experimented lately. The chemistry investigator Derek P. Gregory is cited as believing that hydrogen is the ideal fuel in not just one sense. Hydrogen combustion produces steam as its only residue, a decisive advantage over contaminating conventional fuels such as petrol and coal. Unfortunately, hydrogen hardly exists on earth in its natural free form but only combined in chemical compounds, from which it must be extracted using complicated, expensive and often hazardous industrial processes. In addition, if this obstacle were overcome, it would still be necessary to transport and store the hydrogen in service stations and moreover find a safe and practical way of loading and storing it in motor vehicles. Mercedes-Benz for one is experimenting with a vehicle equipped with a special tank for storing hydrogen gas and means for supplying the gas to the injection system, instead of the conventional petrol tank and circuit, without however yet achieving a satisfactory degree of safety and cost-efficiency. The use of dry hydrogen gas as a propellant has heretofore been found to produce a generally uncontrolled ignition, a large temperature excursion upwards which proved too destructive for the chamber walls. The engine life was limited to less than 10,000 km (about 6,000 miles).

DISCLOSURE OF THE INVENTION

The invention is based on the discovery of an energy-converter system to run an internal combustion engine and particularly is based on the discovery of a method and means for reliably, economically, safely and cleanly fuel an internal combustion engine with hydrogen, and obtaining the hydrogen in a usable form to this end from a cheap and plentifully available substance such as water. The hydrogen may be generated in optimum conditions to be fed into the engine.

According to the invention, hydrogen is obtained on board from a readily available hydrogenous source such as ionised water which is subjected to electrolysis, from whence the hydrogen is injected in each cylinder of the engine on the admission stroke. The hydrogen gas is mixed with water vapour (steam at atmospheric temperature) and surrounding air, and when this mixture is ignited within the combustion chamber, the steam (vapour) seems to act as a temperature moderator first and then assist in the expansion stroke. Preferably, the steam is dry saturated steam which, as a moderator, limits the maximum temperature of the combustion, thus helping to preserve the cylinder, valve and piston elements; and in assisting the expansion, the steam expands fast to contribute extra pressure on the piston head, increasing the mechanical output power of the engine. In other words, the inclusion of steam in the hydrogen propellant as suggested by the present invention moderates the negative effects of hydrogen and enhances the positive effects thereof in the combustion cycle.

As a result of this discovery, the amount of hydrogen required to drive the engine is lower than was heretofore expected, hence the electrolysis need not produce more than 10 cc/sec (for example, for a 1,400 cc engine). Thus the amount of electricity required for the electrolysis, a stumbling block in earlier attempts, is lower, so much so, that on-board hydrogen production is now feasible.

The invention includes an apparatus comprising a first system for generating hydrogen and a second system for conditioning and supplying the hydrogen to the admission valves on the cylinder caps. The hydrogen-generating system basically consists of an electrolysis device which receives electrolitically adapted (i.e. at least partially ionised) water or some other suitable hydrogenous substance. An electric power supply is connected to the electrodes of the electrolysis device for generating the hydrogen, and the electricity requirements and the device dimensions are designed for a maximum hydrogen output rate of about 10 cc/sec for a typical automotive application.

The second system comprises means such as a vacuum pump or the like to draw out the hydrogen from the first system, means for supplying the hydrogen gas to the admission valves, means for conditioning the moisture content of the hydrogen, carburettor means or the like for mixing the hydrogen with atmospheric air or some other combustion enabling substance, and means to control and maintain a specified gas pressure valve or range for the hydrogen supplied to the mixing means.

The apparatus was tested and worked surprisingly well. It was discovered that this seemed to be the result of the steam content in the electrolytic hydrogen gas overcoming the pitfalls encountered in the prior art systems which injected relatively dry gas into the cylinder chambers, or at the most with a relatively small proportion of humidity coming from the air itself.

In the preferred embodiment, the electrolysis system is driven with a pulsed DC power signal of up to 80 Amps at between 75 and 100 Volts. The electrolyte is distilled water salted with sodium chloride with a concentration of about 30 grams of salt per litre of water, to 150 grams of salt in 10 litres of water. Other concentrations are possible depending on the kind of engine, fuel and electricity consumption etc. The maximum rate of hydrogen production required for a typical domestic car engine has been estimated at 10 cc/sec. This hydrogen is drawn out by a pump generating a pressure head of around 2 Kg/cm^2 to feed the generated steam-containing hydrogen to a receptacle provided with means for removing the undesired excess of moisture from the gas. The gas is thus mixed with the desired content of steam when it enters the carburettor or mixing device.

In the event that the generated hydrogen does not have enough steam content, dry saturated steam may be added to the hydrogen as it proceeds to the engine. This may done conveniently, before it enters the carburettor and is mixed with the intake air. Part of the gas may be shunted via a heat-exchanger serpentine connected to the exhaust manifold. This heats some of the gas before it is injected into the base of the carburettor. This heated gas injection operates like a supercharger. The main unheated hydrogen stream is piped directly into the venturi system of the carburettor, where it mixes with air drawn in by the admission stroke vacuum.

BRIEF DESCRIPTION OF THE DRAWINGS

Fig.1 is a schematic layout of the first and second systems and shows the electrolysis device for obtaining hydrogen, and the circuit means for injecting the steam-laden hydrogen into the combustion chambers of a car engine, according to one embodiment of this invention.

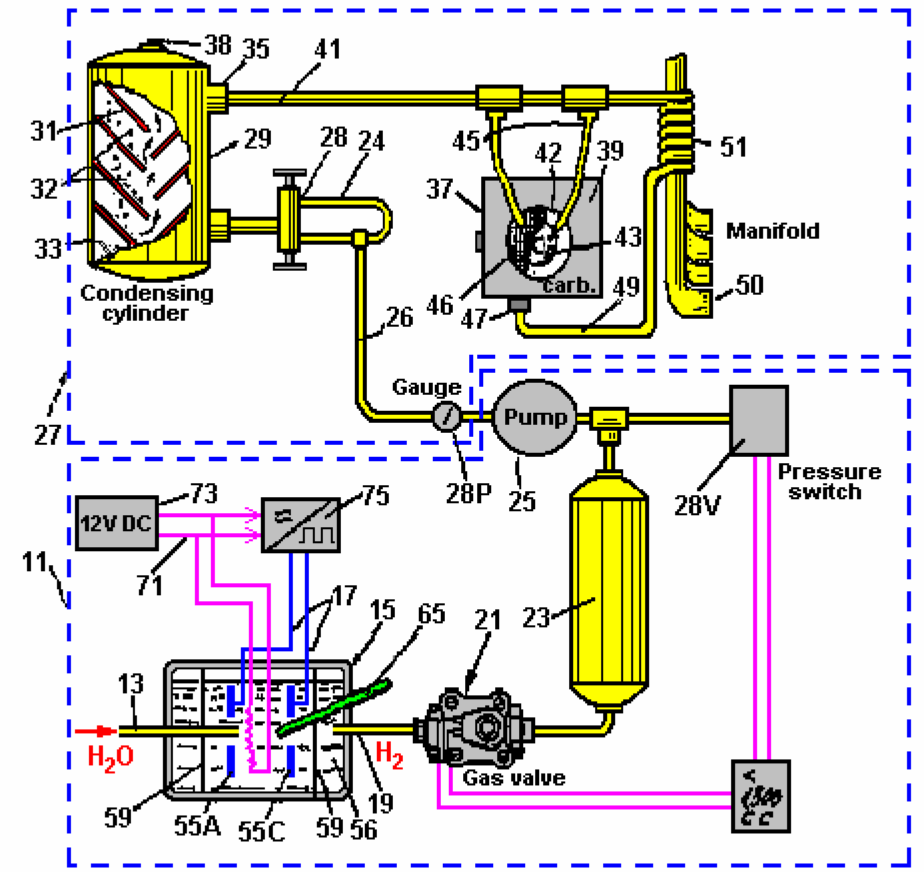

Fig.1

Figure 2 is an elevational view of the electrolysis device of figure 1.

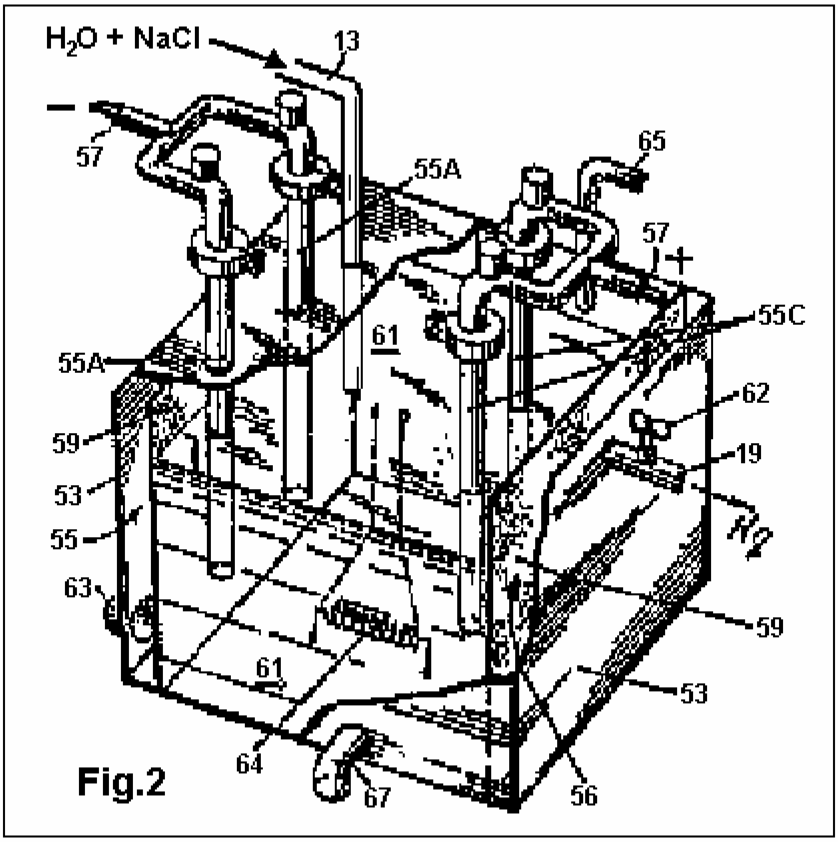

Fig.2

DETAILED ACCOUNT OF AN EMBODIMENT

Fig.1 shows a system **11** for obtaining hydrogen front water piped from a reservoir or tank (not illustrated) to an inlet **13** of an electrolysis cell **15**. The water is salted by adding sodium chloride to ionise it and enable electrolysis when electric power is applied to a pair of terminals **17**. As disclosed in more detail later, the power applied to the terminals **17** is in the form of a DC pulse signal of 65 Amps at 87 Volts, generated via a suitable converter from, in the event that the present system is applied to an automobile, the standard automotive 12 Volt DC level. The device **15** has various outlets, one of which is the hydrogen gas outlet **19** which is connected through a solenoid valve **21** to an accumulator or reservoir cylinder **23**. Other outlets of the electrolysis device **15** are for removing electrolysis effluents such as sodium hydroxide and chlorine gas, to which further reference is made below.

A vacuum pump **25** or similar, extracts gas from the reservoir **23** and channels it through a hydrogen circuit system **27**. Thus the reservoir **23** acts as a pressure buffer of a systems interface between the electrolysis device **15** and the pump **25**. The reservoir **23** may be a 2,000 cc capacity, stainless-steel cylinder with the valve **21** metering the passage of gas through it, so that the reservoir is initially filled with about 1,500 cc of hydrogen at normal pressure and temperature (NPT) conditions. To this end, the cylinder **23** may be provided with a gauge **28V** which controls the state of valve **21** electronically. Valve **21** may be a Jefferson Model SPS solenoid valve, available from OTASI, Santa Rosa 556, Córdoba, Argentina. Vacuum pump **25** is a diaphragm pump with a pulley drive and it is coupled by means of a transmission belt to the engine's crankshaft output. Such a device **25** may be a Bosch model available in Germany. The pulley drive is decoupled by an electromagnetic clutch when the pressure read by a gauge **28P** screwed into the outlet side of pump **25** exceeds 2Kg/sq. cm.

Pump **25** sends hydrogen through tubing **26**, which also includes a by-pass **24** provided for inspection and safety purposes together with a two-way valve **28**, and into a second cylinder **29** which contains means **31** which cause a turbulence or a labyrinthine movement in the gas, in order to condense the heavy mixture, schematically shown as droplets **32**, present in the gas stream. The condensed mixture collects in the form of distilled water **33** at the bottom of cylinder **29**. Near the top of the cylinder, there is an outlet **35** through which hydrogen gas, laden with a good amount of steam, is transported to mixer **37**. Also at the top of collector cylinder **29**, there is a temperature sensor **38** which is connected to an electronic digital thermometer circuit (not shown).

Mixer **37** comprises a carburettor device **39** for mixing hydrogen with air prior to feeding the mixture to the combustion chambers. The hydrogen is piped through a 3/8" diameter tube **41** from dryer cylinder **29** and then into the venturi section **43** of the carburettor **39** through a pair of 5/16" diameter tubes or hydrogen injecting nozzles **45**. The venturi section **43** is a section of the intake air passage which narrows to increase the air speed at the point where hydrogen is drawn out for mixing. The venturi intake **42** may be covered by a mesh **46**. However, it appears that no air filter is needed for the mixer to operate well. The carburettor device **39** may be a simplified form of a conventional carburettor, since the propellant, i.e. hydrogen gas, is fed directly to the venturi **43**. A butterfly valve, or the like, connected to an accelerator pedal (not illustrated) of the motor-car, controls the air intake rate and therefore the speed of the engine. This mixer device **39** is mounted as is a conventional carburettor, such that its outlet at the bottom communicates with the admission valves in the cylinder caps.

At the bottom part of the carburettor there is a supplementary hydrogen intake **47** connected to another 3/8" diameter pipe **49** which shunts part of the hydrogen through a heater **51**. This heater comprises a serpentine tube **51** of a chromium/cobalt alloy, mounted in close heat-exchange relationship with the body of the exhaust manifold **50** (schematically illustrated) in order to add a portion of heated gas to the fuel mixture before it is drawn into the combustion chambers through the corresponding admission valves on the cylinder caps. This pre-admission heating step, takes the hydrogen mixture to a near critical temperature for detonation. It has been found that this improves performance (e.g. the engine smoothness) at some speed ranges, and it works like a supercharger.

In practice, the engine of the present invention has shown a high efficiency when using three-electrode sparking plugs and an electronic ignition system (not illustrated).

Fig.2 shows the electrolysis cell **15** outlined in **Fig.1** in more detail. It is comprised of a rectangular prism reservoir **53** with a pair of spaced-apart vertical electrodes **55**. The reservoir may measure, for instance, 24 cm long by 20 cm wide and 28 cm high. Both the anode and cathode **55** may each comprise double electrodes of carbon having a spacing between the electrodes **55** of the same polarity of about 10 cm. Alternatively, the anode **55A** may be a ring made of carbon while the cathode **55C** is an iron-mesh cylindrical electrode. Each electrode **55** has a terminal **57** at the top for inputting electric power as mentioned earlier. At each outer side of the electrodes **55** there is a porous membrane **59** made from a sheet of amianto (asbestos) for holding the water solution **61** in whilst at the same time letting the electrolysis products, i.e. hydrogen and oxygen, pass through. Thus, the hydrogen gas passes through the membrane **59** into a gas collector chamber **56** and exits out through pipe **19** to fuel the combustion engine. The hydrogen pipe **19** may have a proportioning valve **62** for regulating the flow of hydrogen. The oxygen on the other hand may be vented out into the atmosphere through an outlet **63**.

There is a heater element **64,** immersed in the salted water **61** fed through a resistor connected to a 12 Volt DC supply. This heats the water to about 85 degrees C (185 degrees F) to enhance the galvanic action of the electrolysis current on the aqueous solution **61**. A thermostat with a solid state silicon thermal sensor may be used to control the water temperature via a threshold comparator driving a relay which controls the current in the heater element **64**.

The electrolysis of the heated salted water solution **61** further produces, as effluents, chlorine gas (Cl_2) and sodium hydroxide (NaOH). The chlorine gas may be vented through an opening **65** at the top of the reservoir **53** or else stored in an appropriate disposal tank (not shown). The sodium hydroxide precipitates and may be removed periodically through tap **67** at the bottom of the electrolysis cell.

It is important to note that the practice of the present invention requires practically no modifications in the engine itself. That is, existing petrol engines may be used with hardly any adjustments. Ignition is initiated at the dead top of the compression stroke or with a 1.5 degree lag at the most, and it has been found convenient to widen the gaps of the admission and exhaust valve pushers and use tri-electrode spark plugs. However it is advisable to use some rust-resistant compound such as plastics for the exhaust pipe and silencer, bearing in mind that the combustion residue is hot steam.

Fig.1 also shows schematically, the electric power supply **71** connected to the terminals **17** of the cube **15**. Electrical current is obtained at 12 volt DC from the car battery/alternator system **73** and processed by an inverter device **75** for generating DC pulses of 65 Amps at 87 Volts. Pulse energisation of the electrolysis appears to maximise the ratio of hydrogen output rate to electric power input.

CLAIMS

1. A method of providing propellant to an internal combustion engine wherein combustion is fuelled on the basis of hydrogen gas admitted into at least one combustion chamber of the engine during the intake stroke, characterised in that the hydrogen is injected into the combustion chamber together with vapour.

2. The method of claim 1, characterised in that the surrounding air enters the combustion chamber, together with the hydrogen and vapour.

3. The method of claim 2, characterised in that the hydrogen gas is obtained from water which is continuously subjected to electrolysis energised by the engine.

4. The method of claim 2 or 3, characterised in that the hydrogen is generated at a rate of not more than 10 cc/sec.

5. The method of any of the preceding claims, characterised in that the engine drives a motor-car.

6. The method of any of preceding claims, characterised in that the vapour is added to the hydrogen prior to entering the combustion chamber.

7. The method of any of claims 1 to 5, characterised in that the vapour is contained in the hydrogen when generated.

8. The method of any of the preceding claims, characterised in that the vapour is dry saturated steam.

9. A method of driving a internal combustion engine with water as its primary source of energy, characterised by the steps of subjecting the water to hydrolysis thereby producing gaseous hydrogen, and
controllably supplying the hydrogen produced by the hydrolysis to the engine combustion chambers during the admission stroke of each cylinder together with a proportion of steam.

10. The method of claim 9, characterised in that the steam is dry saturated steam.

11. The method of any of claims 9 or 10, characterised in that the hydrolysis driven by electric power to produce not more than 10 cc/sec of the hydrogen gas.

12. The method of any of claims 9 to 11, characterised in that the engine drives a motor-car including a water tank as its main propellant supply.

13. The method of any of claims 9 to 12, characterised in that at least part of the hydrogen is heated before injecting it into the chamber.

14. The method of any claims of 9 to 13, characterised in that steam is obtained together with the hydrogen gas from the electrolysis and then subjected to a drying cycle up to a predetermined point of saturation before being passed into the chambers.

15. The method of claim 11, characterised in that the hydrolysis means is supplied with about 5 kW pulsed electrical power.

16.A method of injecting propellant into an hydrogen-driven internal combustion engine cylinder during the admission stroke thereof, characterised in that dry steam is passed into said cylinder during the intake stroke to moderate temperature generation of the hydrogen ignition and enhance expansion after ignition has begun to increase the power of the pistons.

17. A method of obtaining hydrogen capable of being used to fuel an internal combustion engine, characterised by dissociating hydrogen gas from a hydrogenous compound, and admitting the hydrogen gas into each cylinder of said engine together with an amount of dry steam.

18. The method of claim 17, characterised in that the hydrogen gas is admitted to the engine cylinders at a rate of not more than 10 cc/sec.

19. The method of claim 17 or 18, characterised in that the compound is slightly salted water and the steam is saturated steam.

20. A system for obtaining and providing hydrogen propellant to an internal combustion engine including at least one cylinder containing a piston which is subjected to successive combustion cycles and injection means for admitting fuel into the cylinder on the intake or admission stroke of the cycle, characterised by comprising: fuel source means for containing a hydrogenous compound, electrolysis means (**15**) having at least one pair of electrodes (**55**) for receiving electric power and intake means (**13**) connected to the source for supplying the compound to the electrolysis means, a means (**27, 37**) for extracting hydrogen gas from one of the electrodes and supplying it to the cylinder injection means, and control means (**25, 28, 29**) for controlling the supply of hydrogen gas to the cylinder injection means whereby the rate of gas consumption in the engine is not more than 10 cc/sec.

21. The system of claim 20, characterised in that the means supplying hydrogen gas to the cylinder injection means further include means (**37**) for mixing said hydrogen gas with steam.

22. The system of claim 20 or 21, characterised in that the compound is water and the source means includes a water tank, the water including salt to facilitate electrolysis.

23. The system of claim 20, 21 or 22, characterised in that the control means include means (**29**) for removing the excessive moisture from the hydrogen gas extracted from the hydrolysis means.

24. The system of any of claims 20 to 23, characterised in that the electrolysis means is energised by the engine.

25. An internal combustion engine operating on hydrogen and having a water tank as its primary source of combustion fuel, a cylinder block containing at least one cylinder chamber, each chamber, having an associated piston, fuel intake means, ignition means, and exhaust means, and crankshaft means coupled to be driven by the pistons for providing mechanical output power from the engine, and characterised by further comprising: electrolysis means (**15**) connected to the water tank for electrolysing water to obtain hydrogen, electrical means (**17**) connected to supply electric power to at least one pair of electrodes (**55**) of the electrolysis means for carrying out the electrolysis of the water, and hydrogen circuit means (**27**) for extracting the hydrogen gas from the electrolysis means and passing it onto said intake means in a manner enabling controlled ignition and expansion of the fuel in the chamber.

26. The engine of claim 25, characterised in that said hydrogen circuit means passes hydrogen gas to the intake means at a rate of not more than 10 cc/sec.

27. The engine of claim 25 or 26, characterised by further comprising means for adding steam into each chamber before ignition of the hydrogen.

28. The engine of claim 27, characterised in that the steam adder means comprises means (**25**) for extracting steam from the electrolysis means, and means (**29**) for subjecting said steam to a drying process up to a pre-determined point.

29. The engine of any of claims 25 to 28, characterised by further comprising means (**49, 51**) for heating at least part of the hydrogen gas before it is passed into the chambers.

30. The engine of claim 29, characterised in that said heating means is a serpentine (**51**) inserted in a shunt (**49**) of the hydrogen circuit means and mounted in heat-exchange relationship on a manifold exhaust of the engine.

31. The engine of any of claims 25 to 30, characterised in that said electrical means include pulse generator means for supplying electrical pulses to said at least one pair of electrodes.

32. The engine of claim 31, characterised in that said pulse generator means supplies electrical DC pulses of between 50 and 75 Amps at between 60 and 100 Volts.

33. The engine of any of claims 25 to 32, characterised in that said hydrogen circuit means includes drying means (**33**) for removing excess moisture from the hydrogen extracted from the electrolysis means.

34. The engine of any of claims 25 to 33, characterised in that said crankshaft means drives a water-fuelled automobile.

35. The engine of any of claims 25 to 34, characterised in that the electrolysis means is driven by electricity derived from the engine.

The HHO Fuel System of Stephen Horvath

US Patent 3,980,053 14th September 1976 Inventor: Stephen Horvath

FUEL SUPPLY APPARATUS FOR INTERNAL COMBUSTION ENGINES

Please note that this is a re-worded excerpt from this patent. It describes the water-splitting procedure of Stephen Horvath.

ABSTRACT

A fuel supply apparatus generates hydrogen and oxygen by electrolysis of water. There is provided an electrolytic cell which has a circular anode surrounded by a cathode with a porous membrane between them. The anode is fluted and the cathode is slotted to provide anode and cathode areas of substantially equal surface area. A pulsed electrical current is provided between the anode and cathode for the efficient generation of hydrogen and oxygen.

The electrolytic cell is equipped with a float, which detects the level of electrolyte within the cell, and water is added to the cell as needed to replace the water lost through the electrolysis process. The hydrogen and oxygen are collected in chambers which are an integral part of the electrolytic cell, and these two gases are supplied to a mixing chamber where they are mixed in the ratio of two parts hydrogen to one part oxygen. This mixture of hydrogen and oxygen flows to another mixing chamber wherein it is mixed with air from the atmosphere.

The system is disclosed as being installed in an car, and a dual control system, which is actuated by the car throttle, first meters the hydrogen and oxygen mixture into the chamber wherein it is combined with air and then meters the combined mixture into the car engine. The heat of combustion of a pure hydrogen and oxygen mixture is greater than that of a gasoline and air mixture of comparable volume, and air is therefore mixed with the hydrogen and oxygen to produce a composite mixture which has a heat of combustion approximating that of a normal gas-air mixture. This composite mixture of air, hydrogen and oxygen then can be supplied directly to a conventional internal combustion engine without overheating and without creation of a vacuum in the system.

BACKGROUND OF THE INVENTION

This invention relates to internal combustion engines. More particularly it is concerned with a fuel supply apparatus by means of which an internal combustion engine can be run on a fuel comprised of hydrogen and oxygen gases generated on demand by electrolysis of water.

In electrolysis a potential difference is applied between an anode and a cathode in contact with an electrolytic conductor to produce an electric current through the electrolytic conductor. Many molten salts and hydroxides are electrolytic conductors but usually the conductor is a solution of a substance which dissociates in the solution to form ions. The term "electrolyte" will be used herein to refer to a substance which dissociates into ions, at least to some extent, when dissolved in a suitable solvent. The resulting solution will be referred to as an "electrolyte solution".

Faraday's Laws of Electrolysis provide that in any electrolysis process the mass of substance liberated at an anode or cathode is in accordance with the formula

$$m = z\,q$$

where m is the mass of substance liberated in grams, z is the electrochemical equivalent of the substance, and q is the quantity of electricity passed, in coulombs. An important consequence of Faraday's Laws is that the rate of decomposition of an electrolyte is dependent on current and is independent of voltage. For example, in a conventional electrolysis process in which a constant current I amps flows to t seconds, $q = It$ and the mass of material deposited or dissolved will depend on I regardless of voltage, provided that the voltage exceeds the minimum necessary for the electrolysis to proceed. For most electrolytes, the minimum voltage is very low.

There have been previous proposals to run internal combustion engines on a fuel comprised of hydrogen gas. Examples of such proposals are disclosed in U.S. Pat. Nos. 1,275,481, 2,183,674 and 3,471,274 and British specifications Nos., 353,570 and 364,179. It has further been proposed to derive the hydrogen from electrolysis of water, as exemplified by U.S. Pat. No. 1,380,183. However, none of the prior art constructions is capable of producing hydrogen at a rate such that it can be fed directly to internal combustion engines without intermediate storage. The present invention enables a fuel comprised of hydrogen and oxygen gases to be generated by electrolysis of water at such a rate that it can sustain operation of an internal combustion engine. It achieves this result by use of an improved electrolysis process of the type generally proposed in the parent application hereof.

As disclosed in my aforesaid parent application the prior art also shows electrolytic reactions employing DC or rectified AC which necessarily will have a ripple component; an example of the former being shown for instance in Kilgus U.S. Pat. No. 2,016,442 and an example of the latter being shown in Emich al. U.S. Pat. No. 3,485,742. It will be noted that the Kilgus Patent also discloses the application of a magnetic field to his electrolyte, which field is said to increase the production of gas at the two electrodes.

SUMMARY OF THE INVENTION

The apparatus of the invention applies a pulsating current to an electrolytic solution of an electrolyte in water. Specifically, it enables high pulses of quite high current value and appropriately low voltage to be generated in the electrolyte solution by a direct input supply to produce a yield of electrolysis products such that these products may be fed directly to the internal combustion engine. The pulsating current generated by the apparatus of the present invention is to be distinguished from normal variations which occur in rectification of AC current and as hereinafter employed the term pulsed current will be taken to mean current having a duty cycle of less than 0.5.

It is a specific object of this invention to provide a fuel supply apparatus for an internal combustion engine by which hydrogen and oxygen gases generated by electrolysis of water are mixed together and fed directly to the internal combustion engine.

A still further object of the invention is to provide, for use with an internal combustion engine having inlet means to receive a combustible fuel, fuel supply apparatus comprising:

a vessel to hold an electrolyte solution of electrolyte dissolved in water;

an anode and a cathode to contact the electrolyte solution within the vessel;

electrical supply means to apply between said diode and said cathode pulses of electrical energy to induce a pulsating current in the electrolyte solution thereby to generate by electrolysis hydrogen gas at the cathode and oxygen gas at the anode;

gas collection and delivery means to collect the hydrogen and oxygen gases and to direct them to the engine inlet means; and

water admission means for admission of water to said vessel to make up loss due to electrolysis.

In order that the invention may be more fully explained one particular example of an car internal combustion engine fitted with fuel supply apparatus in accordance with the invention will now be described in detail with reference to the accompanying drawings.

BRIEF DESCRIPTION OF THE DRAWINGS

Fig.1 is a plan view of part of the car with its engine bay exposed to show the layout of the fuel supply apparatus and the manner in which it is connected to the car engine;

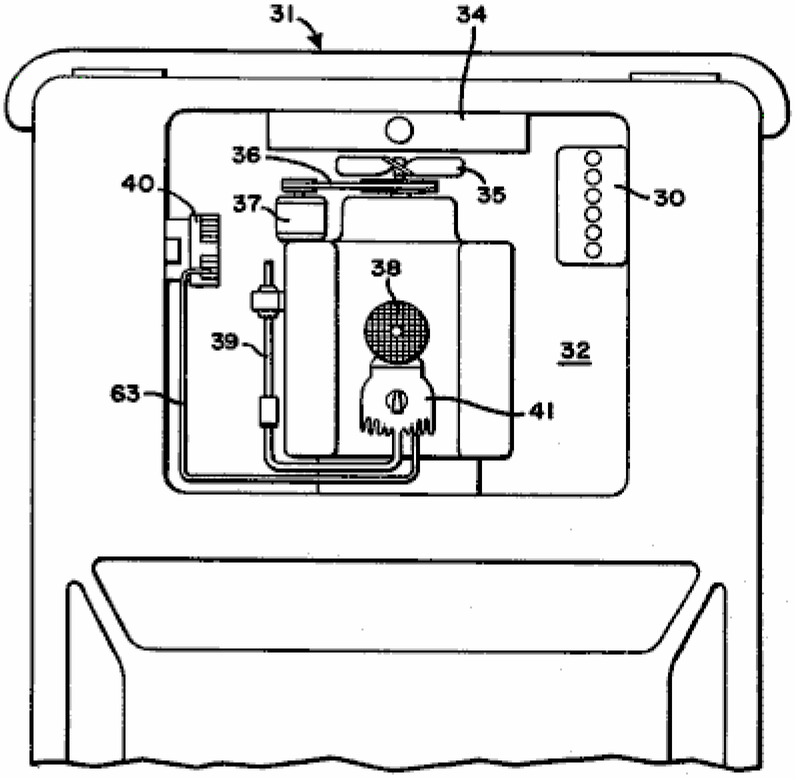

FIG-1

Fig.2 is a circuit diagram of the fuel supply apparatus;

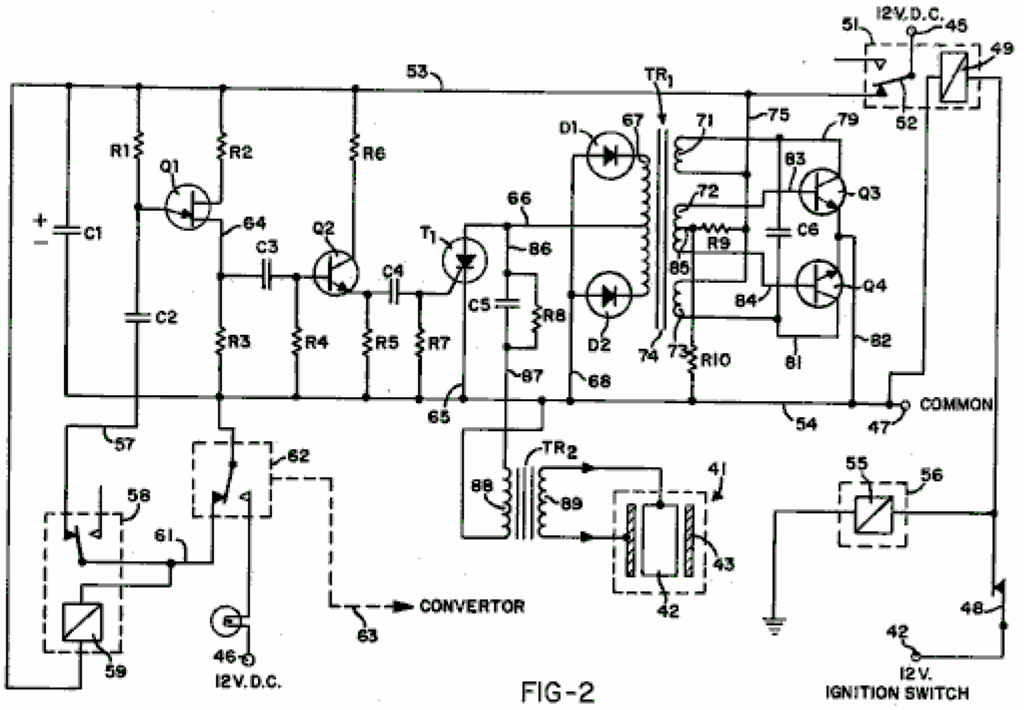

FIG-2

Fig.3 is a plan view of a housing which carries electrical components of the fuel supply apparatus;

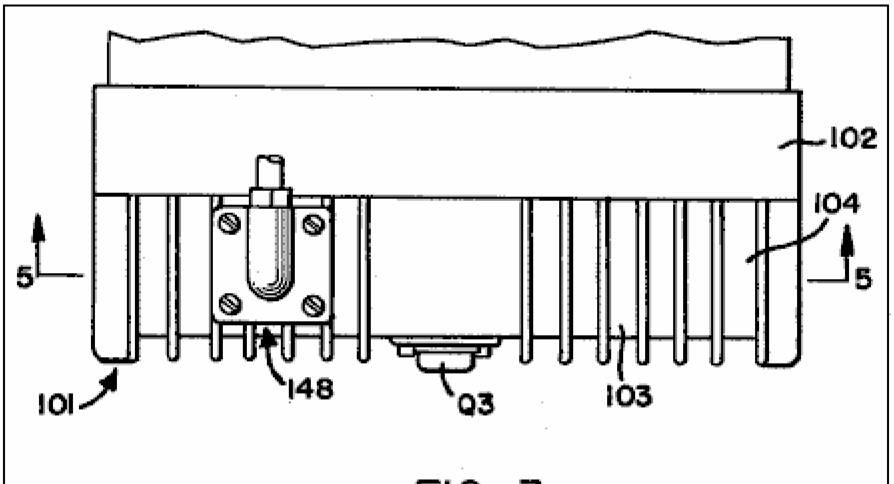

FIG-3

Fig.4 is an elevation view of the housing shown in Fig.3;

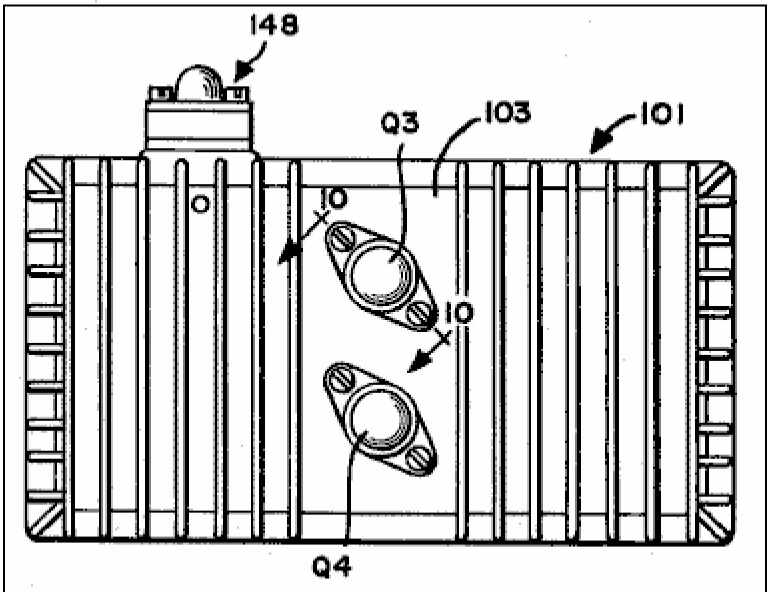

FIG-4

Fig.5 is a cross-section on the line 5--5 in Fig.3;

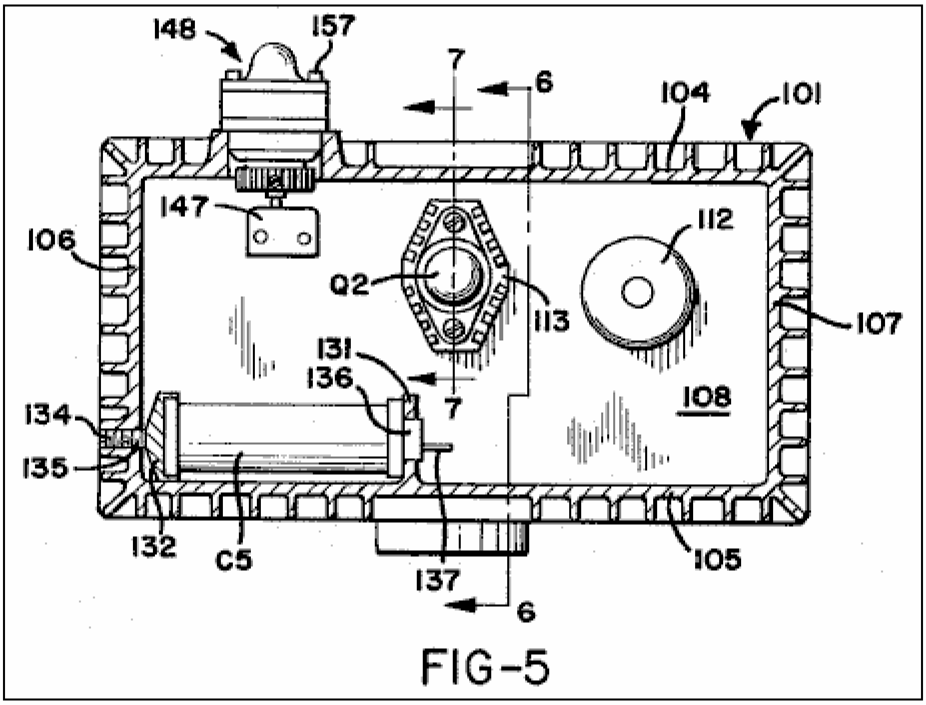

FIG-5

Fig.6 is a cross-section on the line 6--6 in Fig.3;

Fig.7 is a cross-section on the line 7--7 in Fig.5;

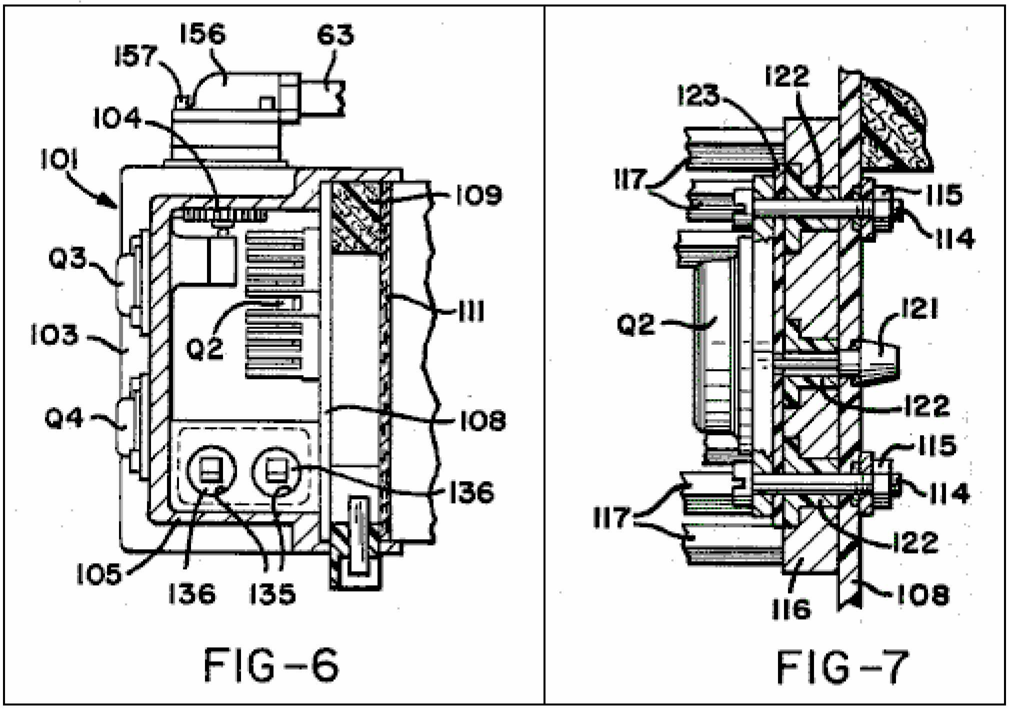

FIG-6

FIG-7

Fig.8 is a perspective view of a diode heat sink included in the components illustrated in Fig.5 and Fig.7;

Fig.9 illustrates a transformer coil assembly included in the electrical components mounted within the housing;

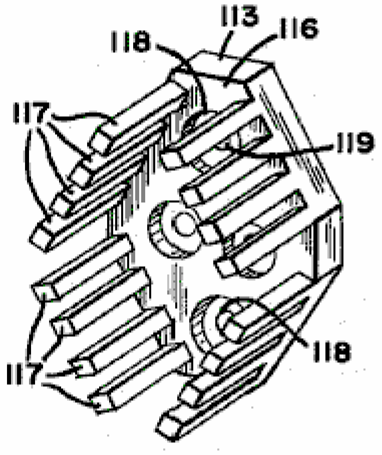

FIG-8

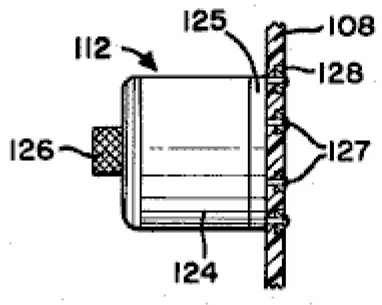

FIG-9

Fig.10 is a cross-section on the line 10--10 in Fig.4;

Fig.11 is a cross-section on the line 11--11 in Fig.5;

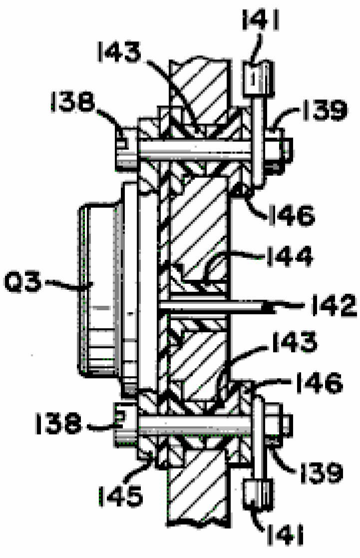

FIG-10

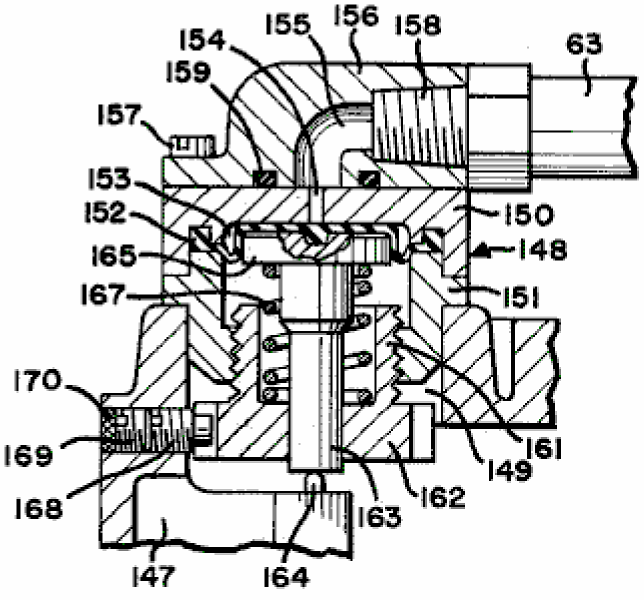

FIG-11

Fig.12 is a cross-section through a terminal block mounted in the floor of the housing;

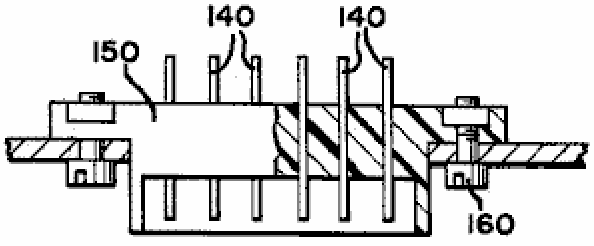

FIG-12

Fig.13 is a plan view of an electrolytic cell incorporated in the fuel supply apparatus;

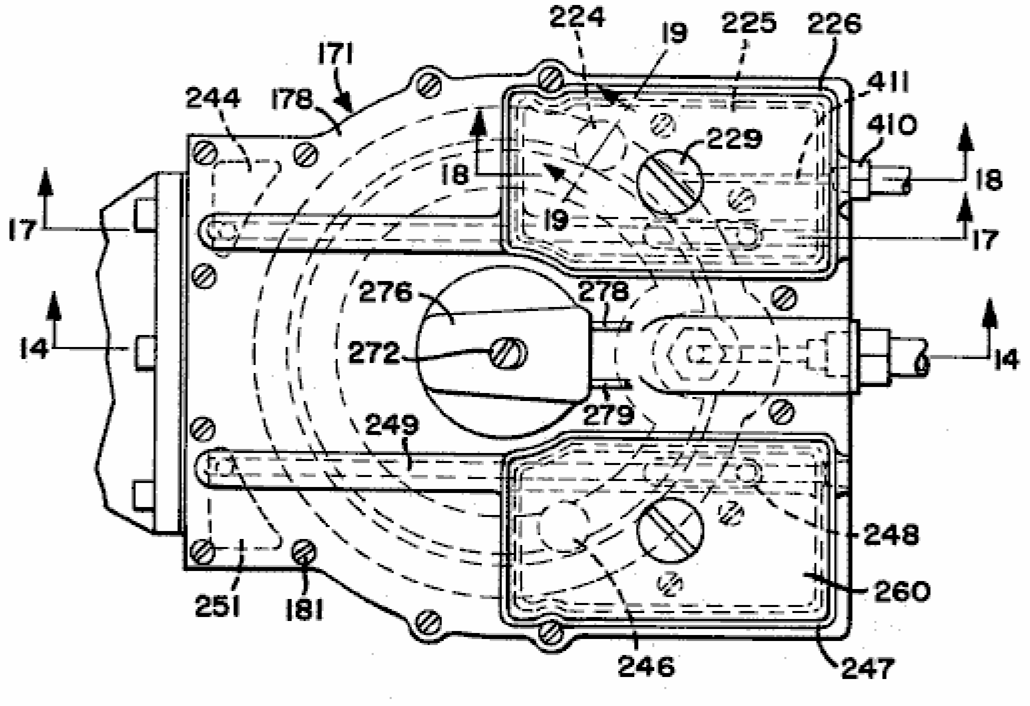

FIG-13

Fig.14 is a cross-section on the line 14--14 in Fig.13;

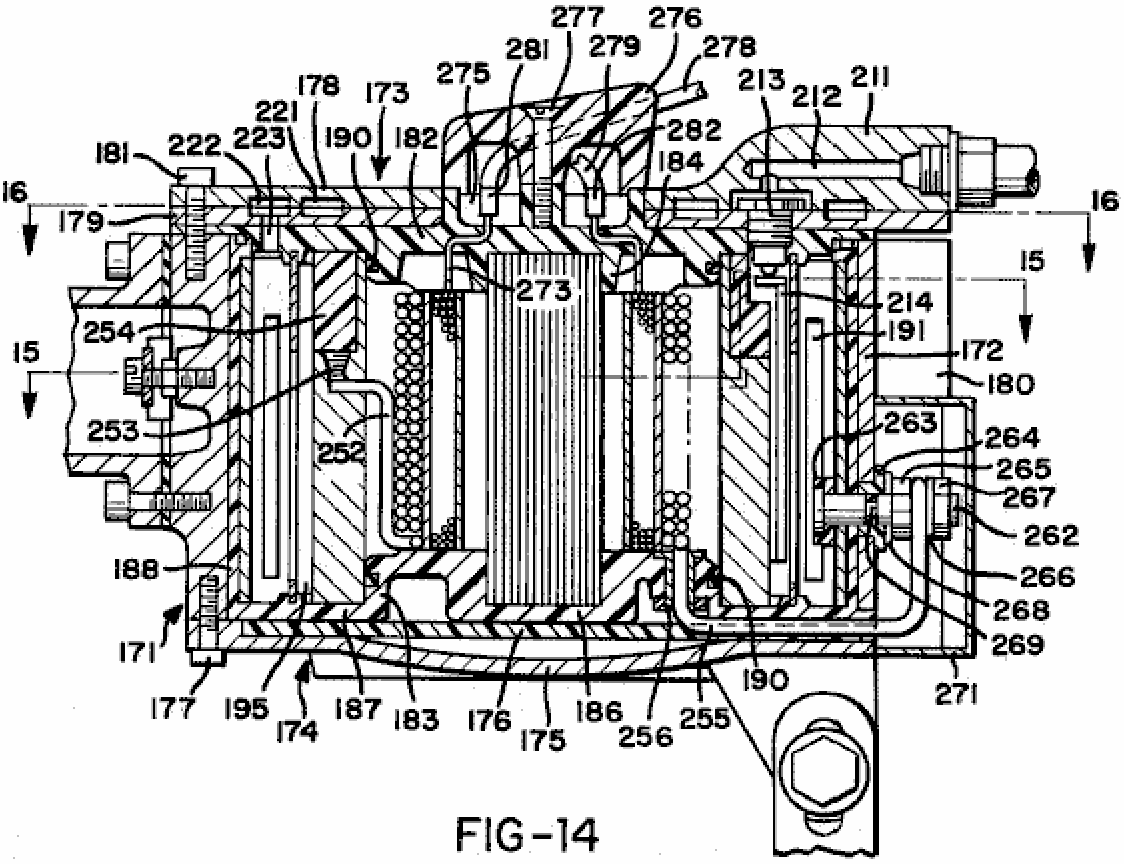

FIG-14

Fig.15 is a cross-section generally on the line 15--15 in Fig.14;

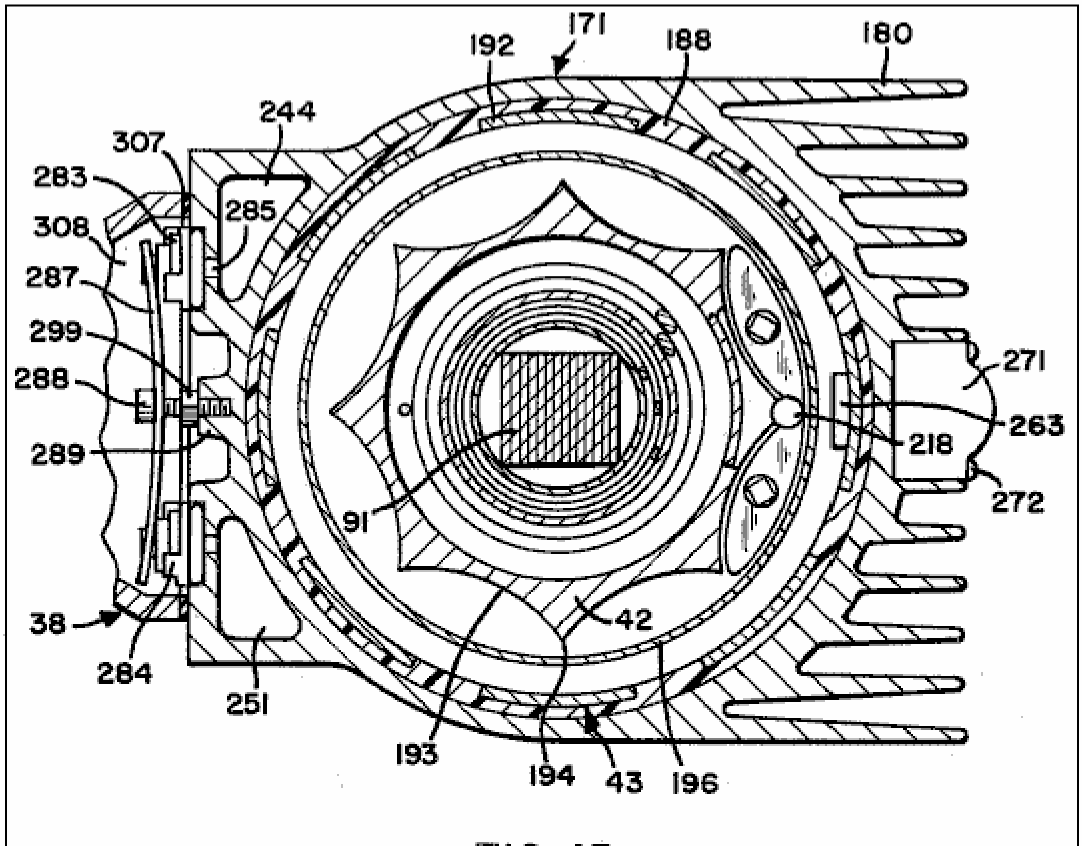

FIG-15

Fig.16 is a cross-section on the line 16--16 in Fig.14;

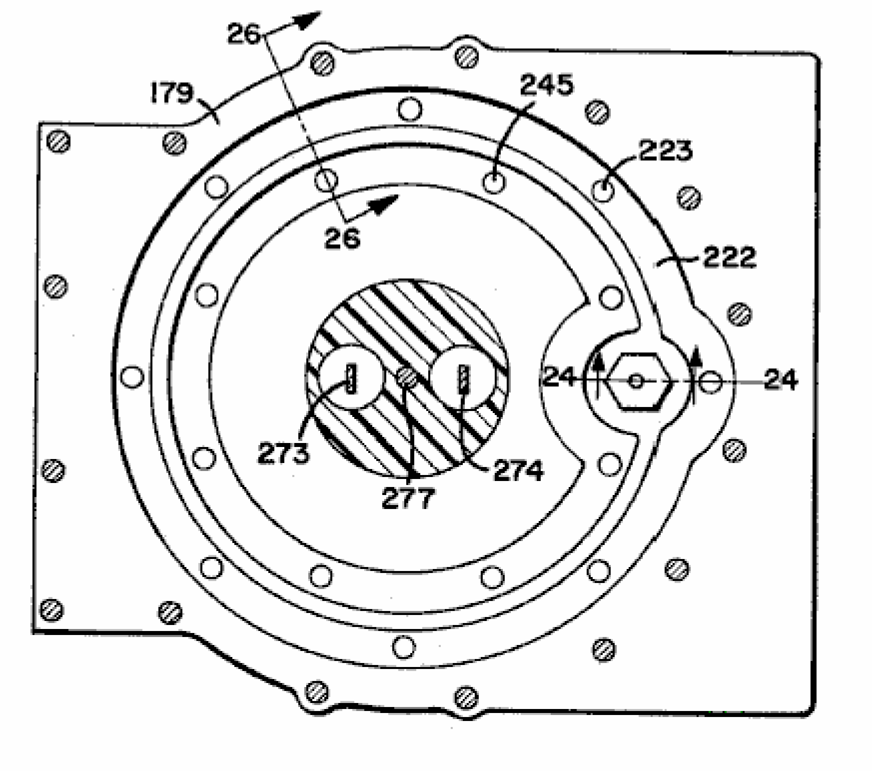

FIG-16

Fig.17 is a cross-section on the line 17--17 in Fig.13;

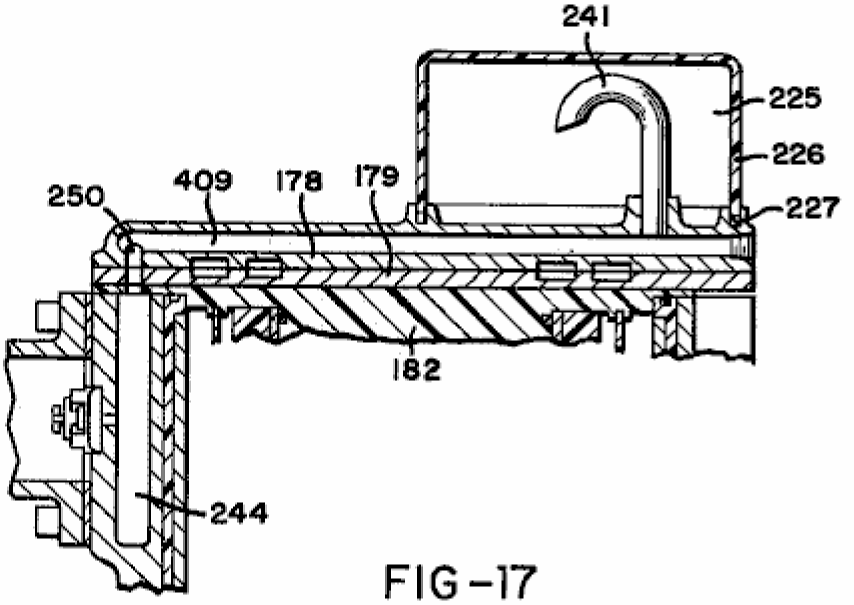

FIG-17

Fig.18 is a cross-section on the line 18--18 of Fig.13;

Fig.19 is a vertical cross-section through a gas valve taken generally on line 19--19 in Fig.13;

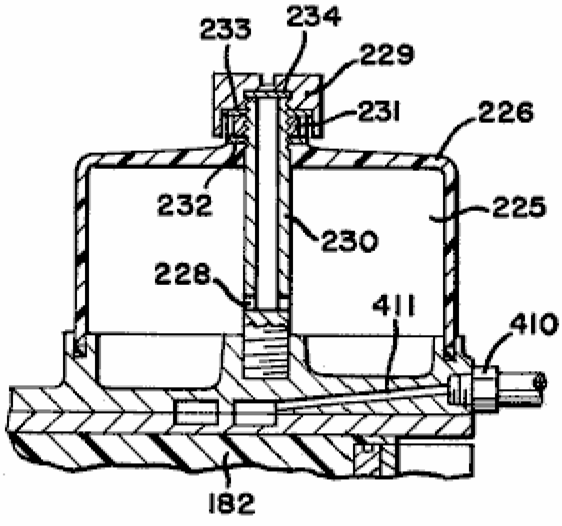

FIG-18

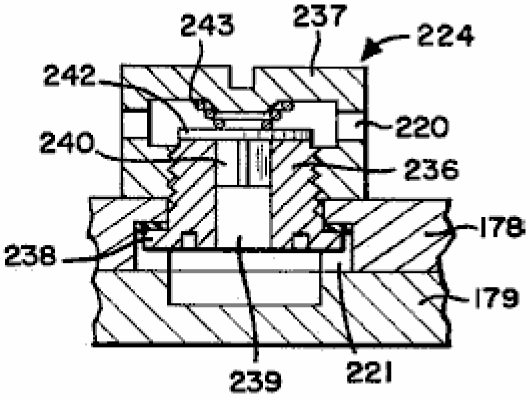

FIG-19

Fig.20 is a perspective view of a membrane assembly disposed in the electrolytic cell;

Fig.21 is a cross-section through part of the membrane assembly;

Fig.22 is a perspective view of a float disposed in the electrolytic cell;

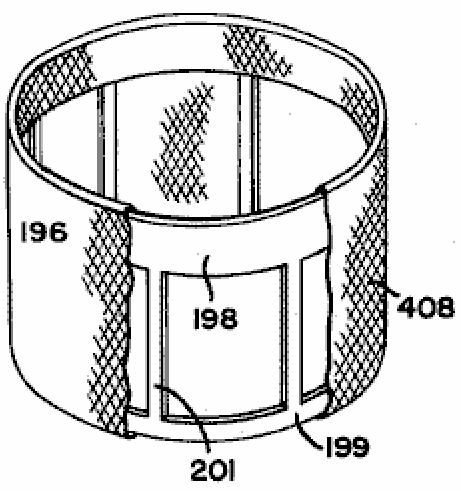

FIG-20

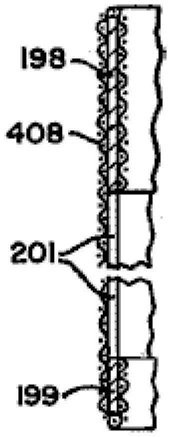

FIG-21

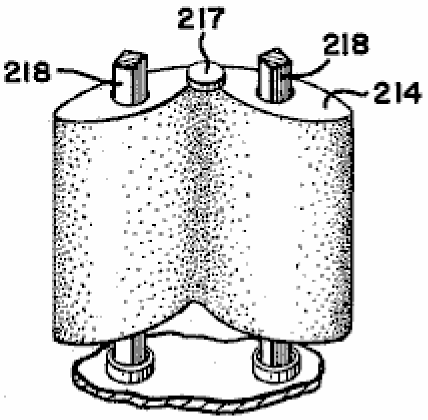

FIG-22

Fig.23 is an enlargement of part of Fig.14;

Fig.24 is an enlarged cross-section on the line 24--24 in Fig.16;

Fig.25 is a perspective view of a water inlet valve member included in the components shown in Fig.24;

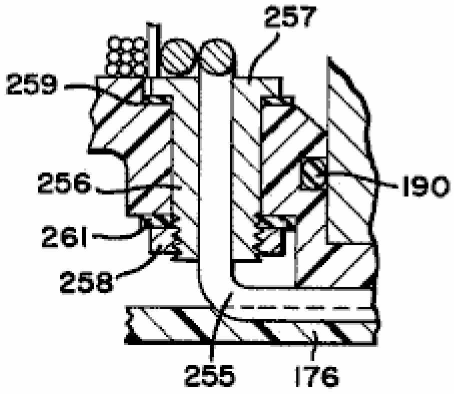

FIG-23

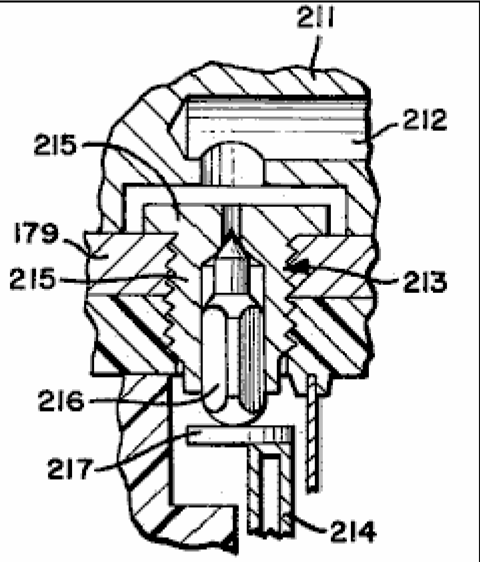

FIG-24

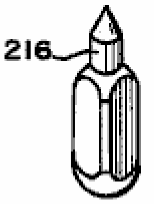

FIG-25

Fig.26 is a cross-section on line 26--26 in Fig.16;

Fig.27 is an exploded and partly broken view of a cathode and cathode collar fitted to the upper end of the cathode;

Fig.28 is an enlarged cross-section showing some of the components of Fig.15;

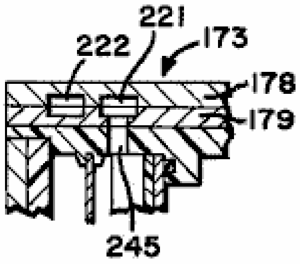

FIG-26

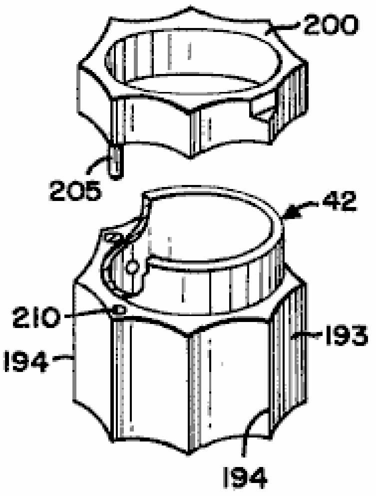

FIG-27

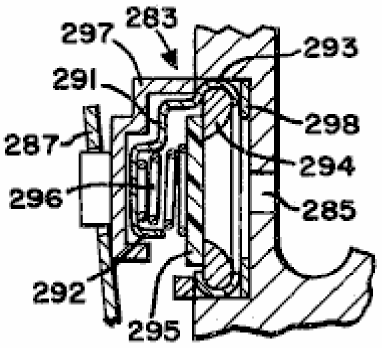

FIG-28

Fig.29 is a perspective view of a valve cover member;

Fig.30 shows a gas mixing and delivery unit of the apparatus generally in side elevation but with an air filter assembly included in the unit shown in section;

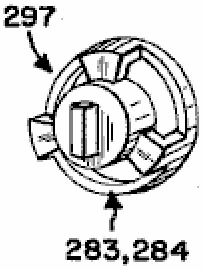

FIG-29

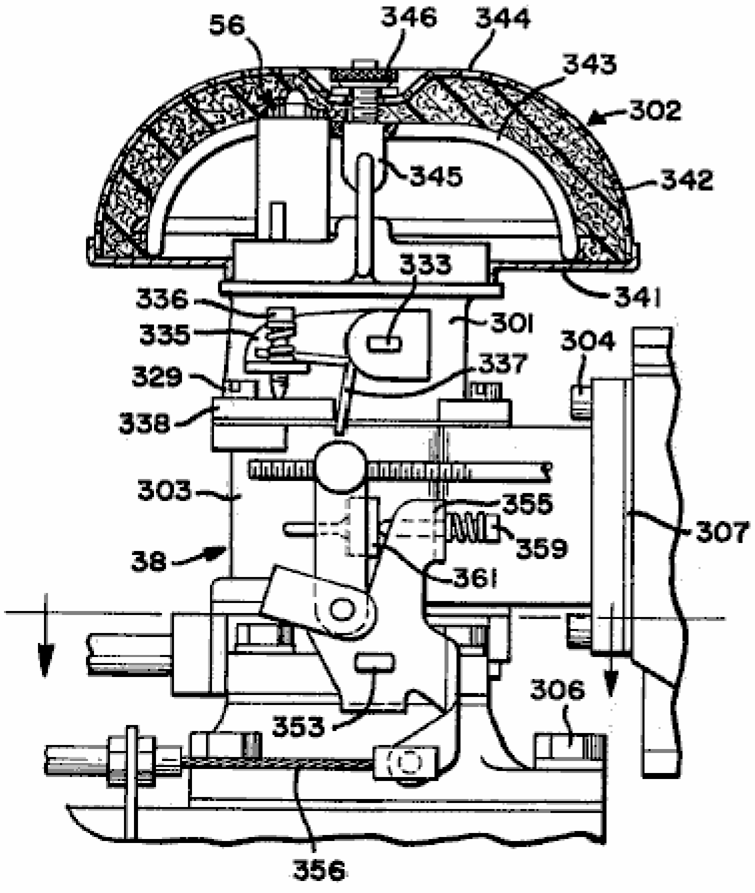

FIG-30

Fig.31 is a vertical cross-section through the gas mixing and delivery unit with the air filter assembly removed;

Fig.32 is a cross-section on the line 32--32 in Fig.31;

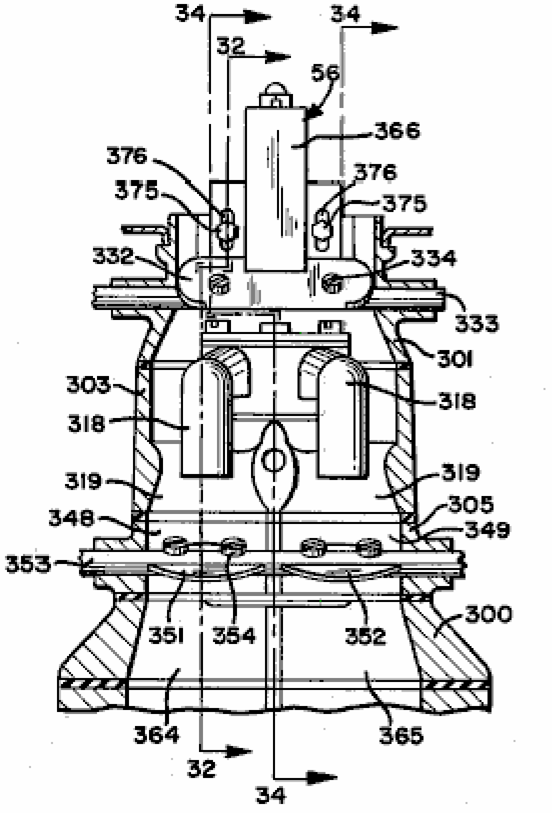

FIG-31

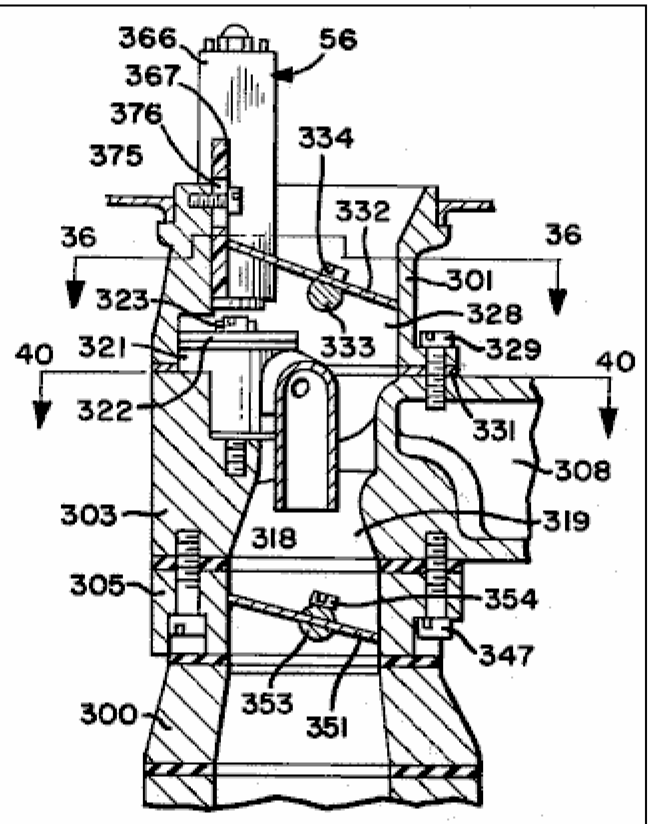

FIG-32

Fig.33 is a perspective view of a valve and jet nozzle assembly incorporated in the gas mixing and delivery unit;

Fig.34 is a cross-section generally on the line 34--34 in Fig.31;

Fig.35 is a cross-section through a solenoid assembly;

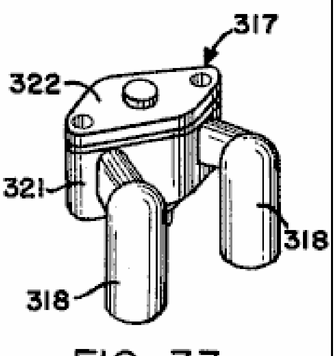

FIG-33

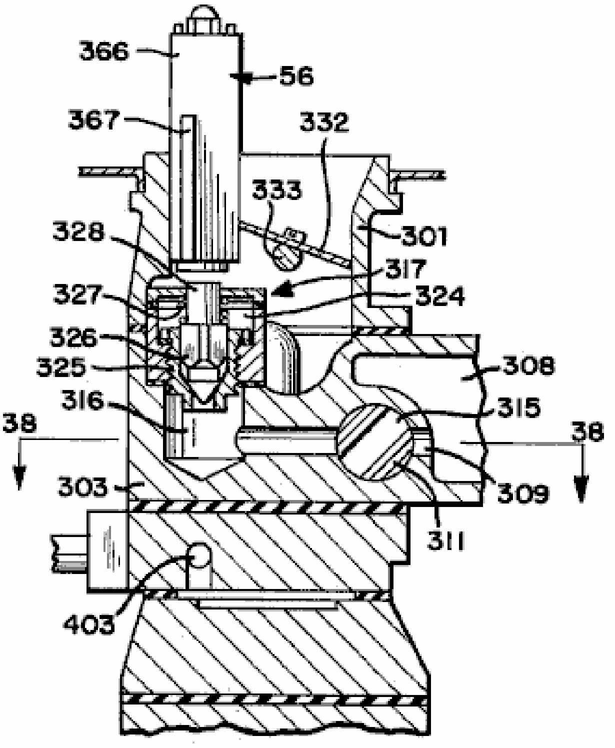

FIG-34

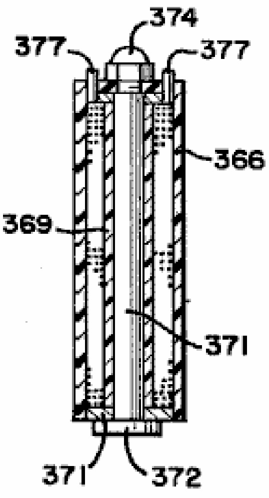

FIG-35

Fig.36 is a cross-section on the line 36--36 in Fig.32;

Fig.37 is a rear elevation of part of the gas mixing and delivery unit;

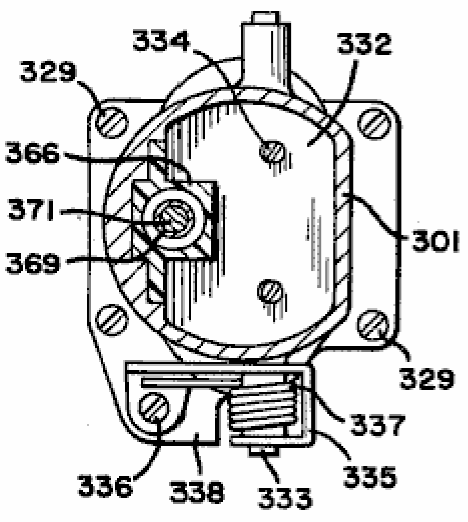

FIG-36

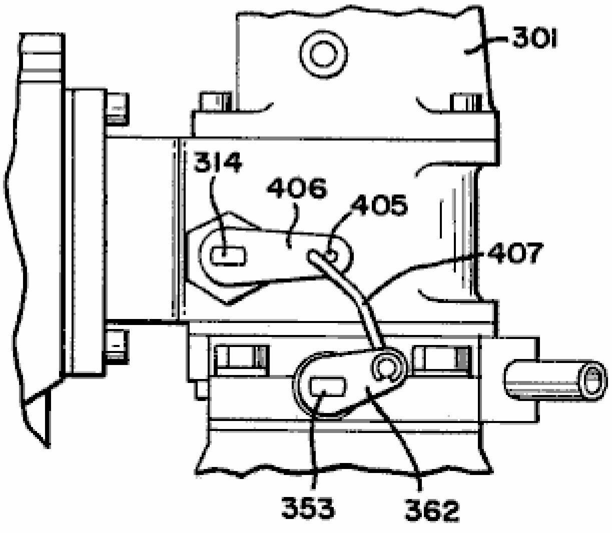

FIG-37

Fig.38 is a cross-section on the line 38--38 in Fig.34;

Fig.39 is a plan view of the lower section of the gas mixing and delivery unit, which is broken away from the upper section along the interface 39--39 of Fig.30;

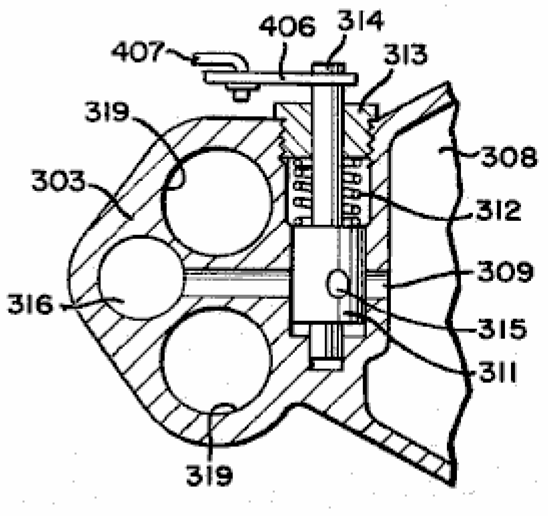

FIG-38

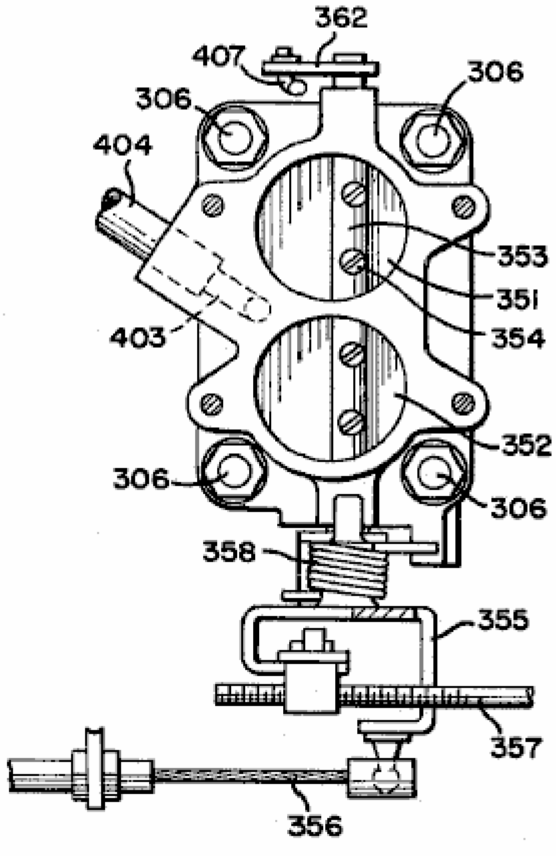

FIG-39

Fig.40 is a cross-section on the line 40--40 in Fig.32; and

Fig.41 is a plan of a lower body part of the gas mixing and delivery unit.

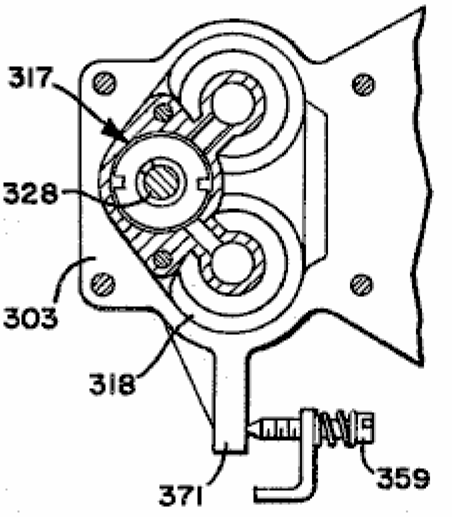

FIG-40

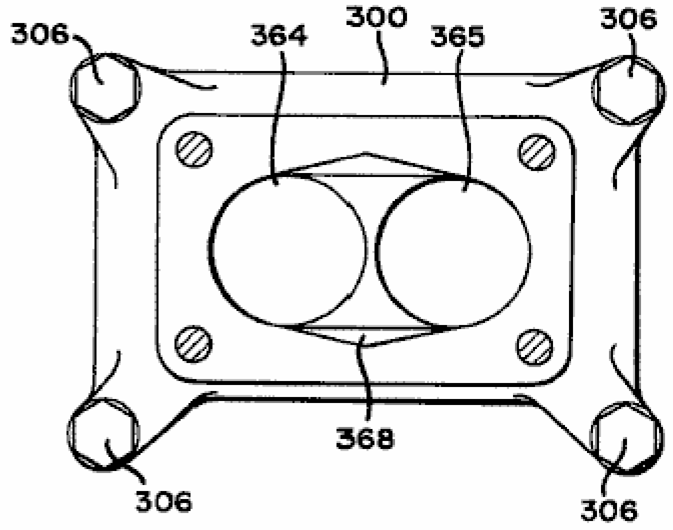

FIG-41

DESCRIPTION OF THE PREFERRED EMBODIMENT

Fig.1 shows an assembly denoted generally as **31** having an engine bay **32** in which an internal combustion engine **33** is mounted behind a radiator **34**. Engine **33** is a conventional engine and, as illustrated, it may have two banks of cylinders in "V" formation. Specifically, it may be a V8 engine. It is generally of conventional construction and **Fig.1** shows the usual cooling fan **34**, fan belt **36** and generator or alternator **37**.

In accordance with the invention the engine does not run on the usual petroleum fuel but is equipped with fuel supply apparatus which supplies it with a mixture of hydrogen and oxygen gases generated as products of a water electrolysis process carried out in the fuel supply apparatus. The major components of the fuel supply apparatus are an electrolytic cell denoted generally as **41** and a gas mixing and delivery unit **38** to mix the hydrogen and oxygen gases generated within the cell **41** and to deliver them to engine **33**. The electrolytic cell **41** receives water through a water delivery line **39** to make up the electrolyte solution within it. It has an anode and a cathode which contact the electrolyte solution, and in operation of the apparatus pulses of electrical energy are applied between the anode and cathode to produce pulses of high current flow through the electrolyte solution. Some of the electrical components necessary to produce the pulses of electrical energy applied between the anode and cathode are carried in a housing **40** mounted on one side of engine bay **32**. The car battery **30** is mounted at the other side of the engine bay.

Before the physical construction of the fuel delivery apparatus is described in detail the general principles of its operation will firstly be described with reference to the electrical circuit diagram of **Fig.2**.

In the illustrated circuit terminals **44, 45, 46** are all connected to the positive terminal of the car battery **30** and terminal **47** is connected to the negative terminal of that battery. Switch **48** is the usual ignition switch of the car and closure of this switch provides current to the coil **49** of a relay **51**. The moving contact **52** of relay **51** receives current at 12 volts from terminal **45**, and when the relay is operated by closure of ignition switch **48** current is supplied through this contact to line **53** so that line **53** may be considered as receiving a positive input and line **54** from terminal **47** may be considered as a common negative for the circuit. Closure of ignition switch **48** also supplies current to one side of the coil **55** of a solenoid **56**. The other side of solenoid coil **55** is earthed by a connection to the car body within the engine bay. As will be explained below solenoid **56** must be energised to open a valve which controls supply of hydrogen and oxygen gases to the engine and the valve closes to cut off that supply as soon as ignition switch **48** is opened.

The function of relay **51** is to connect circuit line **53** directly to the positive terminal of the car battery so that it receives a positive signal directly rather than through the ignition switch and wiring.

The circuit comprises pulse generator circuitry which includes unijunction transistor **Q1** with associated resistors **R1, R2 and R3** and capacitors **C2** and **C3**. This circuitry produces pulses which are used to trigger an NPN silicon power transistor **Q2** which in turn provides via a capacitor **C4** triggering pulses for a thyristor **T1**.

Resistor **R1** and capacitor **C2** are connected in series in a line **57** extending to one of the fixed contacts of a relay **58**. The coil **59** of relay **58** is connected between line **53** and a line **61** which extends from the moving contact of the relay to the common negative line **54** via a normally closed pressure operated switch **62**. The pressure control line **63** of switch **62** is connected in a manner to be described below to a gas collection chamber of electrolytic cell **41** in order to provide a control connection whereby switch **62** is opened when the gas in the collection chamber reaches a certain pressure. However, provided that switch **62** remains closed, relay **58** will operate when ignition switch **48** is closed to provide a connection between lines **57** and **61** thereby to connect capacitor **C2** to the common negative line **54**. The main purpose of relay **58** is to provide a slight delay in this connection between the capacitor **C2** and the common negative line **54** when the circuit is first energised. This will delay the generation of triggering pulses to thyristor **T1** until a required electrical condition has been achieved in the transformer circuitry to be described below. Relay **58** is hermetically sealed and has a balanced armature so that it can operate in any position and can withstand substantial shock or vibration when the car is in use.

When the connection between capacitor **C2** and line **54** is made via relay **58**, unijunction transistor **Q1** will act as an oscillator to provide positive output pulses in line **64** at a pulse rate which is controlled by the ratio of **R1:C1** and at a pulse strength determined by the ratio of **R2:R3**. These pulses will charge the capacitor **C3**. Electrolytic capacitor **C1** is connected directly between the common positive line **53** and the common negative line **54** to filter the circuitry from all static noise.

Resistor **R1** and capacitor **C2** are chosen such that at the input to transistor **Q1** the pulses will be of saw tooth form. This will control the form of the pulses generated in the subsequent circuitry and the saw tooth pulse form is chosen since it is believed that it produces the most satisfactory operation of the pulsing circuitry. It should be stressed, however, that other pulse forms, such as square wave pulses, could be used. Capacitor **C3** discharges through a resistor **R4** to provide triggering signals for transistor **Q2**. Resistor **R4** is connected to the common negative line **54** to serve as a gate current limiting device for transistor **Q2**.

The triggering signals produced by transistor **Q2** via the network of capacitor **C3** and a resistor **R4** will be in the form of positive pulses of sharply spiked form. The collector of transistor **Q2** is connected to the positive supply line **53** through resistor **R6** while the emitter of that transistor is connected to the common negative line **54** through resistor **R5**. These resistors **R5** and **R6** control the strength of current pulses applied to a capacitor **C4**, which discharges through a resistor **R7** to the common negative line **54**, thereby to apply triggering signals to the gate of thyristor **T1**. The gate of thyristor **T1** receives a negative bias from the common negative line via resistor **R7** which thus serves to prevent triggering of the thyristor by inrush currents.

The triggering pulses applied to the gate of thyristor **T1** will be very sharp spikes occurring at the same frequency as the saw tooth wave form pulses established by unijunction transistor **Q1**. It is preferred that this frequency be of the order of 10,000 pulses per minute and details of specific circuit components which will achieve this result are listed below. Transistor **Q2** serves as an interface between unijunction transistor **Q1** and thyristor **T1**, preventing back flow of emf from the gate of the thyristor which might otherwise interfere with the operation of transistor **Q1**. Because of the high voltages being handled by the thyristor and the high back emf applied to transistor **Q2**, the latter transistor must be mounted on a heat sink.

The cathode of thyristor **T1** is connected via a line **65** to the common negative line **54** and the anode is connected via a line **66** to the centre of the secondary coil **67** of a first stage transformer **TR1**. The two ends of transformer coil **67** are connected via diodes **D1** and **D2** and a line **68** to the common negative line **54** to provide full wave rectification of the transformer output.

First stage transformer **T1** has three primary coils **71, 72, 73** wound together with secondary coil **67** about a core **74**. This transformer may be of conventional half cup construction with a ferrite core. The secondary coil may be wound on to a coil former disposed about the core and primary coils **71** and **73** may be wound in bifilar fashion over the secondary coil. The other primary coil **72** may then be wound over the coils **71, 73**. Primary coils **71** and **73** are connected at one side by a line **75** to the uniform positive potential of circuit line **53** and at their other sides by lines **79, 81** to the collectors of transistors **Q3**, **Q4**. The emitters of transistors **Q3, Q4** are connected permanently via a line **82** to the common negative line **54**. A capacitor **C6** is connected between lines **79, 81** to act as a filter preventing any potential difference between the collectors of transistors **Q3, Q4**.

The two ends of primary coil **72** are connected by lines **83, 84** to the bases of transistors **Q3, Q4**. This coil is centre tapped by a line **85** connected via resistor **R9** to the positive line **53** and via resistor **R10** to the common negative line **54**.

When power is first applied to the circuit transistors **Q3** and **Q4** will be in their non-conducting states and there will be no current in primary coils **71, 73**. However, the positive current in line **53** will provide via resistor **R9** a triggering signal applied to the centre tap of coil **72** and this signal operates to trigger alternate high frequency oscillation of transistors **Q3, Q4** which will result in rapid alternating pulses in primary coils **71, 73**. The triggering signal applied to the centre tap of coil **72** is controlled by the resistor network provided by resistors **R9** and **R10** such that its magnitude is not sufficient to enable it to trigger **Q3** and **Q4** simultaneously but is sufficient to trigger one of those transistors. Therefore only one of the transistors is fired by the initial triggering signal to cause a current to flow through the respective primary coil **71** or **73**. The signal required to hold the transistor in the conducting state is much less than that required to trigger it initially, so that when the transistor becomes conductive some of the signal applied to the centre tap of coil **72** will be diverted to the non-conducting transistor to trigger it. When the second transistor is thus fired to become conductive, current will flow through the other of the primary coils **71, 73**, and since the emitters of the two transistors are directly connected together, the positive output of the second transistor will cause the first-fired transistor to be shut off. When the current drawn by the collector of the second-fired resistor drops, part of the signal on the centre tap of coil **72** is diverted back to the collector of the first transistor which is re-fired. It will be seen that the cycle will then repeat indefinitely so that transistors **Q3, Q4** are alternately fired and shut off in very rapid sequence. Thus current pulses flow in alternate sequence through primary coils **71, 73** at a very high frequency, this frequency being constant and independent of changes in input voltage to the circuit. The rapidly alternating pulses in primary coils **71** and **73**, which will continue for so long as ignition switch **48** remains closed, will generate higher voltage signals at the same frequency in the transformer secondary coil **67**.

A dump capacitor **C5** bridged by a resistor **R8** is connected by a line **86** to the line **66** from the secondary coil of transformer **TR1** and provides the output from that transformer which is fed via line **87** to a second stage transformer **TR2**.

When thyristor **T1** is triggered to become conductive the full charge of dump capacitor **C5** is released to second stage transformer **TR2**. At the same time the first stage of transformer **TR1** ceases to function because of this momentary short circuit placed across it and consequently thyristor **T1** releases, i.e. becomes non-conductive. This permits charge to be built up again in dump capacitor **C5** for release when the thyristor is next triggered by a signal from transistor **Q2**. Thus during each of the intervals when the thyristor is in its non-conducting state the rapidly alternating pulses in primary coils **71, 73** of transformer **TR1** produced by the continuously oscillating transistors **Q3, Q4** produce, via the transformer coupling, relatively high voltage output pulses which build up a high charge in capacitor **C5**, and this charge is released suddenly when the thyristor is triggered. In a typical apparatus using a 12 volt DC supply battery pulses of the order of 22 amps at 300 volts may be produced in line **87**.

As previously mentioned relay **58** is provided in the circuit to provide a delay in the connection of capacitor **C2** to the common negative line **54**. This delay, although very short, is sufficient to enable transistors **Q3**, **Q4** to start oscillating to cause transformer **TR1** to build up a charge in dumping capacitor **C5** before the first triggering signal is applied to thyristor **T1** to cause discharge of the capacitor.

Transformer **TR2** is a step-down transformer which produces pulses of very high current flow at low voltage. It is built into the anode of electrolytic cell **41** and comprises a primary coil **88** and a secondary coil **89** wound about a core **91**. Secondary coil **89** is formed of heavy wire in order to handle the large current induced in it and its ends are connected directly to the anode **42** and cathode **43** of the electrolytic cell **41** in a manner to be described below.

In a typical apparatus, the output from the first stage transformer **TR1** would be 300 volt pulses of the order of 22 amps at 10,000 pulses per minute and a duty cycle of slightly less than 0.006. This can be achieved from a uniform 12 volt and 40 amps DC supply using the following circuit components:

Components:
R1 2.7 k ohms 1/2 watt 2% resistor
R2 220 ohms 1/2 watt 2% resistor
R3 100 ohms 1/2 watt 2% resistor
R4 22 k ohms 1/2 watt 2% resistor
R5 100 ohms 1/2 watt 2% resistor
R6 220 ohms 1/2 watt 2% resistor
R7 1 k ohms 1/2 watt 2% resistor
R8 10 m ohms 1 watt 5% resistor
R9 100 ohms 5 watt 10% resistor
R10 5.6 ohms 1 watt 5% resistor

C1 2200 mF 16v electrolytic capacitor
C2 2.2 mF 100v 10% capacitor
C3 2.2 mF 100v 10% capacitor
C4 1 mF 100v 10% capacitor
C5 1 mF 1000v ducon paper capacitor 5S10A
C6 0.002 mF 160v capacitor

Q1 2n 2647 PN unijunction transistor
Q2 2N 3055 NPN silicon power transistor
Q3 2n 3055 NPN silicon power transistor
Q4 2n 3055 NPN silicon power transistor
T1 btw 30-800 rm fast turn-off thyristor
D1 a 14 p diode
D2 a 14 p diode

L1 indicator lamp
Sv1 continuously rated solenoid
Rl1 pw5ls hermetically sealed relay
Ps1 p658a-10051 pressure operated micro switch

Tr1 half cup transformer cores 36/22-341
Coil former 4322-021-30390 wound to provide a turns ratio between secondary and primary of 18:1
Secondary coil 67 = 380 turns
Primary coil 71 = 9 turns
Primary coil 73 = 9 turns
Primary coil 72 = 4 turns

The installation of the above circuit components is illustrated in **Fig.3** to **Fig.13**. They are mounted within and on a housing which is denoted generally as **101** and which is fastened to a side wall of the car engine bay **32** via a mounting bracket **102**. Housing **101**, which may be formed as an aluminium casting, has a front wall **103**, top and bottom walls **104**, **105** and side walls **106**, **107**. All of these walls have external cooling fins. The back of housing **101** is closed by a printed circuit board **108** which is held clamped in position by a peripheral frame **109** formed of an insulated plastics material clamped between the circuit board and mounting bracket **102.** An insulating sheet **111** of cork is held between the frame **109** and mounting bracket **102.**

Printed circuit board **108** carries all of the above-listed circuit components except for capacitor **C5** and transistors **Q3** and **Q4**. **Fig.5** illustrates the position in which transistor **Q2** and the coil assembly **112** of transformer **TR1** are mounted on the printed circuit board. Transistor **Q2** must withstand considerable heat generation and it is therefore mounted on a specially designed heat sink **113** clamped to circuit board **108** by clamping screws **114** and nuts **115**. As most clearly illustrated in **Fig.7** and **Fig.8**, heat sink **113** has a flat base plate portion **116** which is generally diamond shaped and a series of rod like cooling fins **117** project to one side of the base plate around its periphery. It has a pair of countersunk holes **118** of the clamping screws and a similar pair of holes **119** to receive the connector pins **121** which connect transistor **Q2** to the printed circuit board. Holes **118, 119** are lined with nylon bushes **122** and a Formica sheet **123** is fitted between the transistor and the heat sink so that the sink is electrically insulated from the transistor.

The coil assembly **112** of transformer **TR1** (See Fig.9) is comprised of a casing **124** which contains transformer coils and the associated core and former and is closed by a plastic closing plate **125**. Plate **125** is held in position by a clamping stud **126** and is fitted with electrical connector pins **127** which are simply pushed through holes in circuit board **108** and are soldered to appropriate copper conductor strips **128** on the outer face of the board.

For clarity the other circuit components mounted on printed circuit board **108** are not illustrated in the drawings. These are standard small size components and the manner in which they may be fitted to the circuit board is entirely conventional.

Capacitor **C5** is mounted within casing **101**. More specifically it is clamped in position between a flange **131** which stands up from the floor **105** of the casing and a clamping pad **132** engaged by a clamping screw **133**, which is mounted in a threaded hole in casing side wall **106** and is set in position by a lock screw **134**. Flange **131** has two holes **135** (See Fig.6) in which the terminal bosses **136** of capacitor **C5** are located. The terminal pins **137** projecting from bosses **136** are connected to the terminal board **108** by wires (not shown) and appropriate connector pins which are extended through holes in the circuit board and soldered to the appropriate conductor strips on the other face of that board.

Transistors **Q3** and **Q4** are mounted on the front wall **103** of casing **101** so that the finned casing serves as an extended heat sink for these two transistors. They are mounted on the casing wall and electrically connected to the printed circuit board in identical fashion and this is illustrated by **Fig.10** which shows the mounting of transistor **Q3**. As shown in that figure the transistor is clamped in position by clamping screws **138** and nuts **139** which also serve to provide electrical connections to the appropriate conductors of the printed circuit board via conductor wires **141**. The third connection from the emitter of the transistor to the common negative conductor of the printed circuit is made by conductor **142**. Screws **130** and conductor **142** extend through three holes in the casing front wall **103** and these holes are lined with electrically insulating nylon bushes **143, 144**. A Formica sheet **145** is sandwiched between casing plate **103** and the transistor which is therefore electrically insulated from the casing. Two washers **146** are placed beneath the ends of conductor wires **141**.

Pressure operated microswitch **52** is mounted on a bracket **147** projecting inwardly from front wall **103** of casing **101** adjacent the top wall **104** of the casing and the pressure sensing unit **148** for this switch is installed in an opening **149** through top wall **104**. As most clearly seen in **Fig.11**, pressure sensing unit **148** is comprised of two generally cylindrical body members **150, 151** between which a flexible diaphragm **152** is clamped to provide a diaphragm chamber **153**. The gas pressure of sensing tube **63** is applied to chamber **153** via a small diameter passage **154** in body member **150** and a larger passage **155** in a cap member **156**. The cap member and body members are fastened together and clamped to the casing top plate **104** by means of clamping screws **157**. Sensing tube **63** is connected to the passage **155** in cap member **156** by a tapered thread connector **158** and the interface between cap member **156** and body member **150** is sealed by an O-ring **159**.

The lower end of body member **151** of pressure sensing unit **148** has an internally screw threaded opening which receives a screw **161** which at its lower end is formed as an externally toothed adjusting wheel **162**. A switch actuating plunger **163** extends through a central bore in adjusting wheel **162** so that it engages at one end flexible diaphragm **152** and at the other end the actuator member **164** of microswitch **62**. The end of plunger **163** which engages the diaphragm has a flange **165** to serve as a pressure pad and a helical compression spring **167** encircles plunger **163** to act between flange **165** and the adjusting wheel **162** to bias the plunger upwardly against the action of the gas pressure acting on diaphragm **152** in chamber **153**. The pressure at which diaphragm **152** will force plunger **163** down against the action of spring **167** to cause actuation of switch **62** may be varied by rotating screw **161** and the setting of this screw may be held by a setting screw **168** mounted in a threaded hole in the upper part of casing front wall **103** and projecting inwardly to fit between successive teeth of adjusting wheel **162**. After correct setting of screw **161** is achieved set screw **168** will be locked in position by locking screw **169** which is then sealed by a permanent seal **170** to prevent tampering. Microswitch **62** is also electrically connected to the appropriate conductors of the printed circuit board via wires within the housing and connector pins.

Electrical connections are made between the conductors of printed circuit board **108** and the internal wiring of the circuit via a terminal block **150** (**Fig.12**) set in an opening of housing floor **105** by screws **160** and fitted with terminal plates **140**.

The physical construction of electrolytic cell **41** and the second stage transformer **TR2** is illustrated in **Fig.13** to **Fig.29**. The cell comprises an outer casing **171** having a tubular peripheral wall **172** and top and bottom closures **173, 174**. Bottom closure **174** is comprised of a domed cover **175** and an electrically insulated disc **176** which are held to the bottom of peripheral wall **172** by circumferentially spaced clamping studs **177**. Top closure **173** is comprised of a pair of top plates **178, 179** disposed face to face and held by circumferentially spaced clamping studs **181** screwed into tapped holes in the upper end of peripheral wall **172**. The peripheral wall of the casing is provided with cooling fins **180**.

The anode **42** of the cell is of generally tubular formation. It is disposed vertically within the outer casing and is clamped between upper and lower insulators **182, 183**. Upper insulator **182** has a central boss portion **184** and an annular peripheral flange **185** portion the outer rim of which is clamped between upper closure plate **179** and the upper end of peripheral wall **172**. Lower insulator **183** has a central boss portion **186**, an annular flange portion **187** surrounding the boss portion and an outer tubular portion **188** standing up from the outer margin of flange portion **187**. Insulators **182, 183** are moulded from an electrically insulating material which is also alkali resistant. Polytetrafluoroethylene is one suitable material.

When held together by the upper and lower closures, insulators **182, 183** form an enclosure within which anode **42** and the second stage transformer **TR2** are disposed. Anode **42** is of generally tubular formation and it is simply clamped between insulators **182, 183** with its cylindrical inner periphery located on the boss portions **184, 186** of those insulators. It forms a transformer chamber which is closed by the boss portions of the two insulators and which is filled with a suitable transformer oil. O-ring seals **190** are fitted between the central bosses of the insulator plates and the anode to prevent loss of oil from the transformer chamber.

The transformer core **91** is formed as a laminated mild steel bar of square section. It extends vertically between the insulator boss portions **184, 186** and its ends are located within recesses in those boss portions. The primary transformer winding **88** is wound on a first tubular former **401** fitted directly onto core **91** whereas the secondary winding **89** is wound on a second tubular former **402** so as to be spaced outwardly from the primary winding within the oil filled transformer chamber.

The cathode **43** in the form of a longitudinally slotted tube which is embedded in the peripheral wall portion **183**, this being achieved by moulding the insulator around the cathode. The cathode has eight equally spaced longitudinal slots **191** so that it is essentially comprised of eight cathode strips **192** disposed between the slots and connected together at top and bottom only, the slots being filled with the insulating material of insulator **183**.

Both the anode and cathode are made of nickel plated mild steel. The outer periphery of the anode is machined to form eight circumferentially spaced flutes **193** which have arcuate roots meeting at sharp crests or ridges **194** defined between the flutes. The eight anode crests **194** are radially aligned centrally of the cathode strips **192** and the perimeter of the anode measured along its external surface is equal to the combined widths of the cathode strips measured at the internal surfaces of these strips, so that over the major part of their lengths the anode and cathode have equal effective areas. This equalisation of areas generally have not been available in prior art cylindrical anode/cathode arrangements.

As most clearly seen in **Fig.27** the upper end of anode **42** is relieved and fitted with an annular collar **200** the outer periphery of which is shaped to form an extension of the outer peripheral surface of the fluted anode. This collar is formed of an electrically insulated plastics material such as polyvinyl chloride or teflon. A locating pin **205** extends through collar **200** to project upwardly into an opening in upper insulating plate **182** and to extend down into a hole **210** in the cathode. The collar is thus located in correct annular alignment relative to the anode and the anode is correctly aligned relative to the cathode.

The annular space **195** between the anode and cathode serves as the electrolyte solution chamber. Initially this chamber is filled approximately 75% full with an electrolyte solution of 25% potassium hydroxide in distilled water. As the electrolysis reaction progresses hydrogen and oxygen gases collect in the upper part of this chamber and water is admitted to maintain the level of electrolyte solution in the chamber. Insulating collar **200** shields the cathode in the upper region of the chamber where hydrogen and oxygen gases collect to prevent any possibility of arcing through these gases between the anode and cathode.

Electrolyte chamber **195** is divided by a tubular membrane **196** formed by nylon woven mesh material **408** stretched over a tubular former **197** formed of very thin sheet steel. As most clearly illustrated in **Fig.20** and **Fig.21** former **197** has upper and lower rim portions **198, 199** connected by circumferentially spaced strip portions **201**. The nylon mesh material **408** may be simply folded around the upper and lower insulators **182, 183** so that the former is electrically isolated from all other components of the cell. Material **408** has a mesh size which is so small that the mesh openings will not pass bubbles of greater than 0.004 inch diameter and the material can therefore serve as a barrier against mixing of hydrogen and oxygen generated at the cathode and anode respectively while permitting the electrolytic flow of current between the electrodes. The upper rim portion **198** of the membrane former **197** is deep enough to constitute a solid barrier through the depth of the gas collection chamber above the electrolyte solution level so that there will be no mixing of hydrogen and oxygen within the upper part of the chamber.

Fresh water is admitted into the outer section of chamber **195** via an inlet nozzle **211** formed in upper closure plate **178**. The electrolyte solution passes from the outer to the inner sections of chamber **195** through the mesh membrane **408**.

Nozzle **211** has a flow passage **212** extending to an electrolyte inlet valve **213** controlled by a float **214** in chamber **195**. Valve **213** comprises a bushing **215** mounted within an opening extending down through upper closure plate **179** and the peripheral flange **185** of upper insulator **182** and providing a valve seat which co-operates with valve needle **216**. Needle **216** rests on a pad **217** on the upper end of float **214** so that when the electrolyte solution is at the required level the float lifts the needle hard against the valve seat. The float slides vertically on a pair of square section slide rods **218** extending between the upper and lower insulators **182** and **183**. These rods, which may be formed of polytetrafluoroethylene extend through appropriate holes **107** through the float.

The depth of float **214** is chosen such that the electrolyte solution fills only approximately 75% of the chamber **195**, leaving the upper part of the chamber as a gas space which can accommodate expansion of the generated gas due to heating within the cell.

As electrolysis of the electrolyte solution within chamber **195** proceeds, hydrogen gas is produced at the cathode and oxygen gas is produced at the anode. These gases bubble upwardly into the upper part of chamber **195** where they remain separated in the inner and outer compartments defined by membrane and it should be noted that the electrolyte solution enters that part of the chamber which is filled with oxygen rather than hydrogen so there is no chance of leakage of hydrogen back through the electrolyte inlet nozzle.

The abutting faces of upper closure plates **178, 179** have matching annular grooves forming within the upper closure inner and outer gas collection passages **221, 222**. Outer passage **222** is circular and it communicates with the hydrogen compartment of chamber **195** via eight ports **223** extending down through top closure plate **179** and the peripheral flange of upper insulator **182** adjacent the cathode strips **192**. Hydrogen gas flows upwardly through ports **223** into passage **222** and thence upwardly through a one-way valve **224** (**Fig.19**) into a reservoir **225** provided by a plastic housing **226** bolted to top closure plate **178** via a centre stud **229** and sealed by a gasket **227**. The lower part of housing **114** is charged with water. Stud **229** is hollow and its lower end has a transverse port **228** so that, on removal of a sealing cap **229** from its upper end it can be used as a filter down which to pour water into the reservoir **225**. Cap **229** fits over a nut **231** which provides the clamping action on plastic housing **226** and resilient gaskets **232, 233** and **234** are fitted between the nut and cover, between the cap and the nut and between the cap and the upper end of stud **229**.

One-way valve **224** comprises a bushing **236** which projects down into the annular hydrogen passage **221** and has a valve head member **237** screw fitted to its upper end to provide clamping action on top closure plate **178** between the head member and a flange **238** at the bottom end bushing **236**. Bushing **236** has a central bore **239**, the upper end of which receives the diamond cross-section stem of a valve member **240**, which also comprises a valve plate portion **242** biased against the upper end of the bushing by compression spring **243**. Valve member **240** is lifted against the action of spring **243** by the pressure of hydrogen gas within passage **221** to allow the gas to pass into the interior of valve head **237** and then out through ports **220** in that member into reservoir **225**.

Hydrogen is withdrawn from reservoir **225** via a stainless steel crooked tube **241** which connects with a passage **409**. Passage **409** extends to a port **250** which extends down through the top and bottom closure plates **178, 179** and top insulator **182** into a hydrogen duct **244** extending vertically within the casting of casing **171**. Duct **244** is of triangular cross-section. As will be explained below, the hydrogen passes from this duct into a mixing chamber defined in the gas mixing and delivery unit **38** which is bolted to casing **171**.

Oxygen is withdrawn from chamber **195** via the inner annular passage **221** in the top closure. Passage **221** is not circular but has a scalloped configuration to extend around the water inlet. Oxygen enters it through eight ports **245** extended through top closure plate **179** and the annular flange portion of upper insulator **182**. The oxygen flows upwardly from passage **222** through a one-way valve **246** and into a reservoir **260** provided by a plastic housing **247**. The arrangement is similar to that for withdrawal of hydrogen and will not be described in great detail. Suffice to say that the bottom of the chamber is charged with water and the oxygen is withdrawn through a crooked tube **248**, an outlet passage **249** in top closure plate **178**, and a port which extends down through closure plates **178, 179** and top insulator **182** into a triangular cross-section oxygen duct **251** extending vertically within casing **171** disposed opposite hydrogen duct **244**. The oxygen is also delivered to the gas mixing chamber of the mixing and delivery unit **38**.

The pressure sensing tube **63** for switch **62** is connected via a tapered thread connector **410** and a passage **411** in the top closure plate **178** directly to the annular hydrogen passage **222**. If the pressure within the passage rises above a predetermined level, switch **62** is operated to disconnect capacitor **C2** from the common negative line **54**. This removes the negative signal from capacitor **C2** which is necessary to maintain continuous operation of the pulse generating circuitry for generating the triggering pulses on thyristor **T1** and these triggering pulses therefore cease. The transformer **TR1** continues to remain in operation to charge dumping capacitor **C5** but because thyristor **T1** cannot be triggered dumping capacitor **C5** will simply remain charged until the hydrogen pressure in passage **222**, and therefore in chamber **195** falls below the predetermined level and triggering pulses are applied once more to thyristor **T1**. Pressure actuated switch **62** thus controls the rate of gas production according to the rate at which it is withdrawn. The stiffness of the control springs for gas escape valves **224, 246** must of course be chosen to allow escape of the hydrogen and oxygen in the proportions in which they are produced by electrolysis, i.e. in the ratios 2:1 by volume.

Reservoirs **225, 260** are provided as a safety precaution. If a sudden back-pressure were developed in the delivery pipes this could only shatter the plastic housings **226, 247** and could not be transmitted back into the electrolytic cell. Switch **62** would then operate to stop further generation of gases within the cell.

The electrical connections of secondary transformer coil **89** to the anode and the cathode are shown in **Fig.14**. One end of coil **89** is extended as a wire **252** which extends into a blind hole in the inner face of the anode where it is gripped by a grub screw **253** screwed into a threaded hole extended vertically into the anode underneath collar **200**. A tapered nylon plug **254** is fitted above screw **253** to seal against loss of oil from the interior of the anode. The other end of coil **89** is extended as a wire **255** to pass down through a brass bush **256** in the bottom insulator **183** and then horizontally to leave casing **171** between bottom insulating disc **176** and insulator **183**.

As most clearly shown in **Fig.23**, brass bush **256** has a head flange **257** and is fitted at its lower end with a nut **258** whereby it is firmly clamped in position. Gaskets **259, 261** are disposed beneath head flange **257** and above nut **258** respectively.

At the location where wire **255** is extended horizontally to leave the casing the upper face of disc **176** and the lower face of insulator **183** are grooved to receive and clamp onto the wire. Disc **176** and insulator **183** are also extended radially outwardly at this location to form tabs which extend out beneath casing **171** and ensure proper insulation of the wire through to the outer periphery of the casing.

Outside the casing, wire **255** is connected to a cathode terminal bolt **262**. Terminal bolt **262** has a head which is received in a socket in separate head piece **263** shaped to suit the cylindrically curved inner periphery of the cathode and nickel plated to resist chemical attack by the electrolyte solution. The stem of the terminal bolt extends through openings in the cathode and peripheral wall portion **188** of insulator **183** and air insulating bush fitted in an aligned opening in the casing wall **172**. The head piece **263** of the terminal bolt is drawn against the inner periphery of the cathode by tightening of a clamping nut **265** and the end of wire **255** has an eye which is clamped between nut **265** and a washer **266** by tightening a terminal end nut **267**. A washer **268** is provided between nut **265** and brush **264** and a sealing O-ring **269** is fitted in an annular groove in the bolt stem to engage the inner periphery of the bush in order to prevent escape of electrolyte solution. The terminal connection is covered by a cover plate **271** held in place by fixing screws **272**.

The two ends of the primary transformer coil **88** are connected to strip conductors **273, 274** which extend upwardly through the central portion of upper insulator **183**. The upper ends of conductors **273, 274** project upwardly as pins within a socket **275** formed in the top of upper insulator **183**. The top of socket **275** is closed by a cover **276** which is held by a centre stud **277** and through which wires **278, 279** from the external circuit are extended and connected to conductors **273, 274** by push-on connectors **281, 282**.

The transformer connections shown in **Fig.14** are in accordance with the circuit of **Fig.2**, i.e. the ends of secondary coil **89** are connected directly between the anode and the cathode. Transformer **TR2** is a step-down transformer and, assuming an input of pulses of 22 amps at 300 volts and a coil ratio between the primary and secondary of 10:1 the output applied between the anode and the cathode will be pulses of 200 amps at a low voltage of the order of 3 volts. The voltage is well in excess of that required for electrolysis to proceed and the very high current achieved produces a high rate of yield of hydrogen and oxygen. The rapid discharge of energy which produces the large current flow will be accompanied by a release of heat. This energy is not entirely lost in that the consequent heating of the electrolyte solution increases the mobility of the ions which tends to increase the rate of electrolysis.

The configuration of the anode and cathode arrangement of electrolytic cell **41** is of significant importance. The fluted external periphery of the anode causes a concentration of current flow which produces a better gas yield over a given electrode area. This particular configuration also causes the surface area of the anode to be extended and permits an arrangement in which the anode and cathode have equal surface areas which is most desirable in order to minimise electrical losses. It is also desirable that the anode and cathode surfaces at which gas is produced be roughened, for example by sand-blasting. This promotes separation of the gas bubbles from the electrode surfaces and avoids the possibility of overvoltages.

The arrangement of the secondary transformer in which the central anode is surrounded by the cathode is also of great importance. The anode, being constructed of a magnetic material, is acted on by the magnetic field of transformer **TR2** to become, during the period of energisation of that transformer, a strong conductor of magnetic flux. This in turn creates a strong magnetic field in the inter-electrode space between the anode and the cathode. It is believed that this magnetic field increases the mobility of the ions in solution thereby improving the efficiency of the cell.

The heat generated by transformer **TR2** is conducted via the anode to the electrolyte solution and increases the mobility of the ions within the electrolyte solution as above mentioned. The cooling fins **180** are provided on casing **171** to assist in dissipation of excess generated heat. The location of the transformer within the anode also enables the connections of the secondary coil **89** to the anode and cathode to be made of short, well protected conductors.

As mentioned above the hydrogen and oxygen gas generated in electrolytic cell **41** and collected in ducts **244, 251** is delivered to a gas mixing chamber of the mixing and delivery unit **38**. More specifically, these gases are delivered from ducts **244, 251** via escape valves **283, 284** (**Fig.15**) which are held in position over discharge ports **285, 286** from the ducts by means of a leaf spring **287**. The outer ends of spring **287** engage the valves **283, 284** and the centre part of the spring is bowed inwardly by a clamping stud **288** screwed into a tapped hole in a boss **289** formed in the cell casing **171**.

Valve **283** is detailed in **Fig.28** and **Fig.29** and valve **284** is of identical construction. Valve **283** includes an inner valve body **291** having a cap portion **292** and an annular end ring portion **293** which holds an annular valve seat **294**. A valve disc **295** is biased against the valve seat by a valve spring **296** reacting against the cap portion **292**. An outer valve cover **297** fits around the inner member **291** and is engaged by spring **287** to force the inner member firmly into a socket in the wall of the cell casing so to cover the hydrogen discharge port **285**. The end ring portion **293** of the inner body member beds on a gasket **298** within the socket.

During normal operation of the apparatus valves **283, 284** act as simple one-way valves by movements of their spring loaded valve plates. However, if an excessive gas pressure should arise within the electrolytic cell these valves will be forced back against the action of holding spring **287** to provide pressure relief. The escaping excess gas then flows to atmosphere via the mixing and delivery unit **38** as described below. The pressure at which valves **283, 284** will lift away to provide pressure relief may be adjusted by appropriate setting of stud **288**, which setting is held by a nut **299**.

The construction of the gas mixing and delivery unit **38** is shown in **Fig.30** and **Fig.40**. It comprises an upper body portion **301** which carries an air filter assembly **302**, an intermediate body portion **303**, which is bolted to the casing of electrolytic cell **41** by six studs **304**, and successive lower body portions **305, 300**, the latter of which is bolted to the inlet manifold of the engine by four studs **306**.

The bolted connection between intermediate body portion **303** and the casing of the electrolytic cell is sealed by a gasket **307**. This connection surrounds valves **283, 284** which deliver hydrogen and oxygen gases directly into a mixing chamber **308** (**Fig.34**) defined by body portion **303**. The gases are allowed to mix together within this chamber and the resulting hydrogen and oxygen mixture passes along small diameter horizontal passageway **309** within body portion **303** which passageway is traversed by a rotary valve member **311**. Valve member **311** is conically tapered and is held within a correspondingly tapered valve housing by a spring **312** (**Fig.38**) reacting against a bush **313** which is screwed into body portion **303** and serves as a mounting for the rotary valve stem **314**. Valve member **311** has a diametral valve port **315** and can be rotated to vary the extent to which this port is aligned with passageway **309** thereby to vary the effective cross-section for flow through that passageway. As will be explained below, the rotational positions of the valve member is controlled in relation to the engine speed.

Passage **309** extends to the lower end of a larger diameter vertical passageway **316** which extends upwardly to a solenoid freed valve **310** incorporated in a valve and jet assembly denoted generally as **317**.

Assembly **317** comprises a main body **321** (**Fig.32**) closed at the top by a cap **322** when the assembly is clamped to body portion **303** by two clamping studs **323** to form a gas chamber **324** from which gas is to be drawn through jet nozzles **318** into two vertical bores or throats **319** (**Fig.31**) in body portion **303**. The underside of body **321** has a tapped opening into which is fitted an externally screw threaded valve seat **325** of valve **310**. A valve member **326** is biased down against seat **325** by a spring **327** which reacts against cap **322**. Spring **327** encircles a cylindrical stem **328** of valve member **326** which stem projects upwardly through an opening in cap **322** so that it may be acted on by solenoid **56** which is mounted immediately above the valve in upper body portion **301**.

Solenoid **56** is comprised of an outer insulating casing **366** which has two mounting flanges **367**. This casing houses the copper windings constituting coil **55**. These are wound on a plastic bobbin **369** disposed about a central mild steel core **371.** The core has a bottom flange **372** and the bobbin and coils are held clamped in the casing through insulating closure **373** acted on by flange **372** on tightening of a clamping nut **374** which is fitted to the other end of the core.

Upper body portion **301** of unit **38** is tubular but at one side it has an internal face shaped to suit the exterior profile of solenoid casing **366** and mounting flanges **367**. Two mounting screws **375** screw into holes in this face and engage slots **376** in the mounting flanges **367** so that the height of the solenoid above valve **310** can be adjusted. The two terminals **377** are connected into the electrical circuit by wires (not shown) which may be extended into unit **38** via the air filter assembly.

When solenoid **56** is energised its magnetised core attracts valve stem **328** and valve member **326** is lifted until stem **328** abuts the lower flange **372** of the solenoid core. Thus valve **310** is opened when the ignition switch is closed and will close under the influence of spring **327** when the ignition switch is opened. Vertical adjustment of the solenoid position controls the lift of valve member **326** and therefore the maximum fuel flow rate through unit **38**.

Electrolyte cell **41** produces hydrogen in the ratio 2:1 to provide a mixture which is by itself completely combustible. However, as used in connection with existing internal combustion engines the volume of hydrogen and oxygen required for normal operation is less than that of a normal fuel air mixture. Thus a direct application to such an engine of only hydrogen and oxygen in the amount required to meet power demands will result in a vacuum condition within the system. In order to overcome this vacuum condition provision is made to draw make-up air into throats **319** via the air filter assembly **302** and upper body portion **301**.

Upper body portion **301** has a single interior passage **328** through which make-up air is delivered to the dual throats **319**. It is fastened to body portion **303** by clamping studs **329** and a gasket **331** is sandwiched between the two body portions. The amount of make-up air admitted is controlled by an air valve flap **332** disposed across passage **328** and rotatably mounted on a shaft **333** to which it is attached by screws **334**. The valve flap is notched to fit around solenoid casing **366**. Shaft **333** extends through the wall of body portion **301** and outside that wall it is fitted with a bracket **335** which carries an adjustable setting screw **336** and a biasing spring **337**. Spring **337** provides a rotational bias on shaft **333** and during normal running of the engine it simply holds flap **332** in a position determined by engagement of setting screw **336** with a flange **338** of body portion **301**. This position is one in which the flap almost completely closes passage **328** to allow only a small amount of make-up air to enter, this small amount being adjustable by appropriate setting of screw **336**. Screw **336** is fitted with a spring **339** so that it will hold its setting.

Although flaps **332** normally serve only to adjust the amount of make-up air admitted to unit **38**, it also serves as a pressure relief valve if excessive pressures are built up, either due to excessive generation of hydrogen and oxygen gases or due to burning of gases in the inlet manifold of the engine. In either event the gas pressure applied to flaps **332** will cause it to rotate so as to open passage **328** and allow gases to escape back through the air filter. It will be seen in **Fig.32** that flap mounting shaft **333** is offset from the centre of passage **328** such that internal pressure will tend to open the flap and thus exactly the reverse of the air valve in a conventional gasoline carburettor.

Air filter assembly **302** comprises an annular bottom pan **341** which fits snugly onto the top of upper body portion **301** and domed filter element **342** held between an inner frame **343** and an outer steel mesh covering **344**. The assembly is held in position by a wire and eyebolt fitting **345** and clamping nut **346.**

Body portion **305** of unit **38** (**Fig.31**), which is fastened to body portion **303** by clamping studs **347**, carries throttle valve apparatus to control engine speed. It has two vertical bores **348, 349** serving as continuations of the dual throats which started in body portion **303** and these are fitted with throttle valve flaps **351, 352** fixed to a common throttle valve shaft **353** by fixing screws **354**. Both ends of shaft **353** are extended through the wall of body portion **305** to project outwardly therefrom. One end of this shaft is fitted with a bracket **355** via which it is connected as in a conventional carburettor to a throttle cable **356** and also to an automatic transmission kick-down control linkage **357**. A biasing spring **358** acts on shaft **353** to bias throttle flaps toward closed positions as determined by engagement of a setting screw **359** carried by bracket **355** with a plate **361** projecting from body portion **303**.

The other end of throttle valve shaft **353** carries a lever **362** the outer end of which is connected to a wire link **407** by means of which a control connection is made to the valve stem **314** of valve member **311** via a further lever **406** connected to the outer end of the valve stem. This control connection is such that valve member **311** is at all times positioned to pass a quantity of gas mixture appropriate to the engine speed as determined by the throttle setting. The initial setting of valve member **311** can be adjusted by selection between two connection holes **405** in lever **406** and by bending of link **407**.

Body portion **303** is fastened to the bottom body portion **300** of unit **38** by four clamping studs **306**. The bottom body portion has two holes **364, 365** which form continuations of the dual throats and which diverge in the downward direction so as to direct the hydrogen, oxygen and air mixture delivered through these throats outwardly toward the two banks of cylinder inlets. Since this fuel is dry, a small quantity of oil vapour is added to it via a passage **403** in body portion **305** to provide some upper cylinder lubrication. Passage **403** receives oil vapour through a tube **404** connected to a tapping on the engine tapped cover. It discharges the oil vapour down on to a relieved top face part **368** of body portion **300** between holes **364, 365**. The vapour impinges on the relieved face part and is deflected into the two holes to be drawn with the gases into the engine.

In the illustrated gas mixing and delivery unit **38**, it will be seen that passageway **309**, vertical passageway **316**, chamber **324** and nozzles **318** constitute transfer passage means via which the hydrogen mixture pass to the gas flow duct means comprised of the dual throats via which it passes to the engine. The transfer passage means has a gas metering valve comprised of the valve member **311** and the solenoid operated valve is disposed in the transfer passage means between the metering valve and the gas flow duct means. The gas metering valve is set to give maximum flow rate through the transfer passage means at full throttle setting of throttle flaps **351, 352**. The solenoid operated valve acts as an on/off valve so that when the ignition switch is opened the supply of gas to the engine is positively cut-off thereby preventing any possibility of spontaneous combustion in the cylinders causing the engine to "run on". It also acts to trap gas in the electrolytic cell and within the mixing chamber of the mixing and delivery unit so that gas will be available immediately on restarting the engine.

Dumping capacitor **C5** will determine a ratio of charging time to discharge time which will be largely independent of the pulse rate and the pulse rate determined by the oscillation transistor **Q1** must be chosen so that the discharge time is not so long as to produce overheating of the transformer coils and more particularly the secondary coil 89 of transformer **TR2**. Experiments indicate that overheating problems are encountered at pulse rates below about 5,000 and that the system will behave much like a DC system, with consequently reduced performance at pulse rates greater than about 40,000. A pulse rate of about 10,000 pulses per minute will be nearly optimum. With the saw tooth wave input and sharply spiked output pulses of the preferred oscillator circuit the duty cycle of the pulses produced at a frequency of 10,000 pulses per minute was about 0.006. This pulse form helps to minimise overheating problems in the components of the oscillator circuit at the high pulse rates involved. A duty cycle of up to 0.1, as may result from a square wave input, would be feasible but at a pulse rate of 10,000 pulses per minute some of the components of the oscillator circuit would then be required to withstand unusually high heat inputs. A duty cycle of about 0.005 would be a minimum which could be obtained with the illustrated type of oscillator circuitry.

From the foregoing description it can be seen that the electrolytic cell **41** converts water to hydrogen and oxygen whenever ignition switch **44** is closed to activate solenoid **51**, and this hydrogen and oxygen are mixed in chamber **308**. Closure of the ignition switch also activates solenoid **56** to permit entry of the hydrogen and oxygen mixture into chamber **319**, when it mixes with air admitted into the chamber by air valve flap **332**. As described above, air valve flap **332** may be set to admit air in an amount as required to avoid a vacuum condition in the engine.

In operation the throttle cable **356** causes bracket **355** to pivot about throttle valve shaft **353**, which rotates flap **351** to control the amount of hydrogen-oxygen-air mixture entering the engine. At the same time shaft **353** acts via the linkage shown in **Fig.37** to control the position of shaft **314**, and shaft **314** adjusts the amount of hydrogen-oxygen mixture provided for mixing with the air. As shown in **Fig.30**, bracket **355** may also be linked to a shaft **357**, which is connected to the car transmission. Shaft **357** is a common type of shaft used for down shifting into a passing gear when the throttle has been advanced beyond a predetermined point. Thus there is provided a compact fuel generation system which is compatible with existing internal combustion engines and which has been designed to fit into a standard passenger car.

While the form of apparatus herein described constitutes a preferred embodiment of the invention, it is to be understood that the invention is not limited to this precise form of apparatus, and that changes may be made therein without departing from the scope of the invention.

CLAIMS

1. For an internal combustion engine having inlet means to receive a combustible fuel, fuel supply apparatus comprising:

a vessel to hold an aqueous electrolyte solution;

an anode and a cathode to contact the electrolyte solution within the vessel;

electrical supply means to apply between said anode and said cathode pulses of electrical energy to induce a pulsating current in the electrolyte solution thereby to generate by electrolysis hydrogen and oxygen gases;

gas collection and delivery means to collect the hydrogen and oxygen gases and to direct them to the engine inlet means; and

water admission means to admit water to said vessel;

said electrical supply means comprising a source of direct current electrical energy of substantially uniform voltage and current and electrical converter means to convert that energy to said pulses, said converter means comprising a transformer means having primary coil means energised by direct current energy from said source and secondary coil means inductively coupled to the primary coil means; a dump capacitor connected to the secondary coil means of the transformer means so as to be charged by electrical output of that coil means; oscillator means to derive electrical pulses from direct current energy of said source; a switching device switchable from a non-conducting state to a conducting state in response to each of the electrical pulses derived by the oscillator means and connected to the secondary coil means of the transformer means and the dump capacitor such that each switching from its non-conducting state to its conducting state causes the dump capacitor to discharge and also short circuits the transformer means to cause the switching means to revert to its non-conducting state; and electrical conversion means to receive the pulse discharges from the dump capacitor and to convert them to said pulses of electrical energy which are applied between the anode and cathode.

2. Fuel supply as claimed in claim 1, wherein the electrical supply means applies said pulses of electrical energy at a frequency of ranging between about 5,000 and 40,000 pulses per minute.

3. Fuel supply apparatus as claimed in claim 2, wherein the electrical supply means applies said pulses of electrical energy at a frequency of about 10,000 pulses per minute.

4. Fuel supply apparatus as claimed in claim 2, wherein the electrical supply means comprises a source of direct current electrical energy of substantially uniform voltage and current and electrical converter means to convert that energy to said pulses.

5. Fuel supply apparatus as claimed in claim 1, wherein the electrical conversion means is a voltage step-down transformer comprising a primary coil to receive the pulse discharge from said dump capacitor and a secondary coil electrically connected between the anode and cathode and inductively coupled to the primary coil.

6. Fuel supply apparatus as claimed in claim 5, wherein said cathode encompasses the anode.

7. Fuel supply apparatus as claimed in claim 1, wherein the cathode encompasses the anode which is hollow and the primary and secondary coils of the second transformer means are disposed within the anode.

8. Fuel supply apparatus as claimed in claim 1, wherein the anode is tubular and its ends are closed to form a chamber which contains the primary and secondary coils of the second transformer means and which is charged with oil.

9. In combination with an internal combustion engine having an inlet for combustible fuel, fuel supply apparatus comprising:

a. an electrolytic cell to hold an electrolytic conductor;

b. a first hollow cylindrical electrode disposed within said cell and provided about its outer surface with a series of circumferentially spaced and longitudinally extending flutes;

c. a second hollow cylindrical electrode surrounding said anode and segmented into a series of electrically connected longitudinally extending strip; said strips being equal in number to the number of said flutes, said strips having a total active surface area approximately equal to the total active surface area of said flutes, and said strips being in radial alignment with the crests of said flutes;

d. current generating means for generating a flow of electrolysing current between said first and second electrodes;

e. gas collection and delivery means to collect hydrogen and oxygen gases from the cell and to direct them to said fuel inlet of the engine; and

f. water admission means to admit water to the cell.

10. The combination claimed in claim 9, wherein said current generating means comprises a transformer situated inside said first electrode.

11. The combination claimed in claim 10, wherein the secondary winding of said transformer is connected whereby said first electrode operates as an anode and said second electrode operates as a cathode.

12. The combination claimed in claim 11, wherein said current generating means further comprising means to generate a pulsed current in the primary winding of said transformer.

13. The combination claimed in claim 9, wherein the roots of said flutes are cylindrically curved.

14. The combination claimed in claim 10, wherein said current generating means comprises a source of direct current; a transformer means having primary coil means energised by direct current energy from said source and secondary coil means inductively coupled to the primary coil means; a dump capacitor connected to the secondary coil means of the transformer means so as to be charged by electrical output of that coil means; oscillator means to derive electrical pulses from direct current energy of said source, a switching device switchable from a non-conducting state to a conducting state in response to each of the electrical pulses derived by the oscillator means and connected to the secondary coil means of the transformer means and the dump capacitor such that each switching from its non-conducting state to its conducting state causes the dump capacitor to discharge and also short circuits the transformer means to cause the switching means to revert to its non-conducting state; and electrical conversion means to receive the pulse discharges from the dump capacitor and to convert them to said pulses of electrical electrical which are applied between said first and second electrodes.

15. The combination claimed in claim 10, wherein the electrical conversion means comprises a voltage step-down transformer having a primary coil to receive the pulse discharge from said dump capacitor and a secondary coil electrically connected between said first and second electrodes.

16. The combination of an internal combustion engine having an inlet to receive a combustible fuel and fuel supply apparatus comprising:

a vessel to hold an aqueous electrolyte solution;

a first hollow cylindrical electrode disposed within said vessel and provided about its outer surface with a series of circumferentially spaced and longitudinally extending flutes;

a second hollow cylindrical electrode surrounding the first electrode and segmented into a series of electrically connected longitudinally extending strips; said strips being equal in number to the number of said flutes and being in radial alignment with the crests of said flutes;

current generating means for generating a pulsating current between said first and second electrodes to produce hydrogen and oxygen gases within the vessel;

gas collection and delivery means to collect the hydrogen and oxygen gases and to direct them to the engine inlet means; and

water admission means to admit water to the vessel.

17. The combination claimed in claim 26, wherein said current generating means comprises a source of direct current; a first transformer means having primary coil means energised by direct current energy from said source and secondary coil means inductively coupled to the primary coil means; a dump capacitor connected to the secondary coil means of the first transformer means so as to be charged by electrical output of that coil means; oscillator means to derive electrical pulses from direct current energy of said source; a switching device switchable from non-conducting state to a conducting state in response to each of the electrical pulses derived by the oscillator means and connected to the secondary coil means of the first transformer means and the dump capacitor such that each switching from its non-conducting state to its conducting state causes the dump capacitor to discharge and also short circuits the first transformer means to cause a second transformer to receive the pulse discharges from the dump capacitor and to transform them to pulses of electrical energy which are applied between said first and second electrodes.

18. The combination claimed in claim 26, wherein the second transformer means has primary coil means energised by the pulse discharges from the dump capacitor and secondary coil means which is inductively coupled to the primary coil means and is connected to the first and second electrodes such that the first electrode operates as an anode and the second electrode operates as a cathode.

The Water Fracture Cell of Christopher Eccles

UK Patent App. 2,324,307 21st October 1998 Inventor: Christopher R. Eccles

FRACTURE CELL APPARATUS

Please note that this is a re-worded extract from the patent and the diagrams have been adapted slightly. It describes a device for splitting water into hydrogen and oxygen gasses via electrolysis using electrodes which are placed on the **outside** of the cell.

ABSTRACT

Fracture cell apparatus including a capacitive fracture cell **20** comprising a container **21** having walls **21a**, and **21b** made of non-electrically conducting material for containing a liquid dielectric **26**, and spaced apart electrodes **22** and **23** positioned outside container **21** with the liquid dielectric **26** between the electrodes, and a mechanism (**8a** and **8b** in **Fig.1** and **Fig.2**) for applying positive and negative voltage pulses to each of the electrods **22** and **23**. In use, whenever one of a positive voltage pulse and a negative voltage pulse is applied to one of the two electrodes, the other of a positive voltage pulse and a negative voltage pulse is applied to the other of the two electrodes, thereby creating an alternating electric field across the liquid dielectric to cause fracture of the liquid dielectric **26**. The apparatus may be used for generating hydrogen gas.

FRACTURE CELL APPARATUS

This invention relates to a fracture cell apparatus and to a method of generating fuel gas from such fracture cell apparatus. In particular, but not exclusively, the invention relates to an apparatus and method for providing fuel gas from water.

Conventionally, the principal methods of splitting a molecular species into its component atomic constituents have been either purely chemical or purely electrolytic:

Purely chemical reactions always involve "third-party" reagents and do not involve the interaction of(l) an applied external electrical influence, and (2) a simple substance. Conventional electrolysis involves the passage of an electric current through a medium (the electrolyte), such current being the product of ion-transits between the electrodes of the cell. When ions are attracted towards either the cathode or the anode of a conventional electrolytic cell, they either receive or donate electrons on contact with the respective electrode. Such electron exchanges constitute the current during electrolysis. It is not possible to effect conventional electrolysis to any useful degree without the passage of this current; it is a feature of the process.

A number of devices have recently been described which purport to effect "fracture" of, particularly, water by means of resonant electrostatic phenomena. In particular one known device and process for producing oxygen and hydrogen from water is disclosed in US-A-4936961. In this known device a so-called fuel cell water "capacitor" is provided in which two concentrically arranged spaced apart "capacitor" plates are positioned in a container of water, the water contacting, and serving as the dielectric between, the "capacitor" plates. The "capacitor" is in effect a charge-dependent resistor which begins to conduct after a small displacement current begins to flow. The "capacitor" forms part of a resonant charging circuit that includes an inductance in series with the "capacitor". The "capacitor" is subjected to a pulsating, unipolar electric charging voltage which subjects the water molecules within the "capacitor" to a pulsating electric field between the capacitor plates. The "capacitor" remains charged during the application of the pulsating charging voltage causing the covalent electrical bonding of the hydrogen and oxygen atoms within the water molecules to become destabilised, resulting in hydrogen and oxygen atoms being liberated from the molecules as elemental gases.

Such known fracture devices have, hitherto, always featured, as part of their characteristics, the physical contact of a set of electrodes with the water, or other medium to be fractured. The primary method for limiting current flow through the cell is the provision of a high impedance power supply network, and the heavy reliance on the time-domain performance of the ions within the water (or other medium), the applied voltage being effectively "switched off" in each cycle before ion-transit can occur to any significant degree.

In use of such a known system, there is obviously an upper limit to the number of ion-migrations, electron captures, and consequent molecule-to-atom disruptions which can occur during any given momentary application of an external voltage. In order to perform effectively, such devices require sophisticated current-limiting and very precise switching mechanisms.

A common characteristic of all such known fracture devices described above, which causes them to behave as though they were conventional electrolysis cells at some point in time after the application of the external voltage, is that they have electrodes in actual contact with the water or other medium.

The present invention seeks to provide an alternative method of producing fracture of certain simple molecular species, for example water.

According to one aspect of the present invention there is provided a fracture cell apparatus including a capacitive fracture cell comprising a container having walls made of non-electrically conducting material for containing a liquid dielectric, and spaced apart electrodes positioned outside the container with the liquid dielectric between the electrodes, and a mechanism for applying positive and negative voltage pulses to each of the electrodes so that, whenever one of a positive voltage pulse and a negative voltage pulse is applied to one of the two electrodes, the other voltage pulse is applied to the other electrode, thereby creating an alternating electric field across the liquid dielectric to cause fracture of the liquid dielectric.

In the apparatus of this invention, the electrodes do not contact the liquid dielectric which is to be fractured or disrupted. The liquid to be fractured is the simple dielectric of a capacitor. No purely ohmic element of conductance exists within the fracture cell and, in use, no current flows due to an ion-carrier mechanism within the cell. The required fracture or disruption of the liquid dielectric is effected by the applied electric field whilst only a simple displacement current occurs within the cell.

Preferably the liquid dielectric comprises water, e.g. distilled water, tap water or deuterated water.

Conveniently each electrode comprises a bipolar electrode.

The mechanism for alternately applying positive and negative pulses, provides step voltages alternately to the two electrodes with a short period of time during each charge voltage cycle in which no step voltage is applied to either electrode. Typically, step voltages in excess of 15 kV, typically about 25 kV, on either side of a reference potential, e.g. earth, are applied to the electrodes. In effect, trains of pulses having alternating positive and negative values are applied to the electrodes, the pulses applied to the different electrodes being "phase shifted". In the case where each electrode comprises a bipolar electrode, each bipolar electrode comprising first and second electrode "plates" electrically insulated from each other, a train of positive pulses is arranged to be applied to one electrode plate of each bipolar electrode and a train of negative pulses is arranged to be applied to the other electrode plate of each bipolar electrode. One electrode plate of one bipolar electrode forms a first set with one electrode plate of the other bipolar electrode and the other electrode plate of the one bipolar electrode forms a second set with the other electrode plate of the other bipolar electrode. For each set, a positive pulse is applied to one electrode plate and a negative pulse is applied simultaneously to the other electrode plate. By alternately switching the application of positive and negative pulses from one to the other set of electrode plates, an "alternating" electric field is generated across the dielectric material contained in the container. The pulse trains are synchronised so that there is a short time interval between the removal of pulses from one electrode plate set and the application of pulses to the other electrode plate set.

According to another aspect of the present invention, there is provided a method of generating gas comprising, applying positive and negative voltage pulses alternately to the electrodes (positioned either side of, but not in contact with, a liquid dielectric), the voltage pulses being applied so that, whenever one of a positive voltage pulse and a negative voltage pulse is applied to one of the two electrodes, the other of a positive voltage pulse and a negative voltage pulse is applied to the other of the two electrodes, the applied voltage pulses generating an alternating electric field across the liquid dielectric causing fracture of the liquid dielectric into gaseous media. Preferably, voltages of at least 15 kV, e.g. 25 kV, either side of a reference value, e.g. earth, are applied across the liquid dielectric to generate the alternating electric field.

An embodiment of the invention will now be described by way of example only, with particular reference to the accompanying drawings, in which:

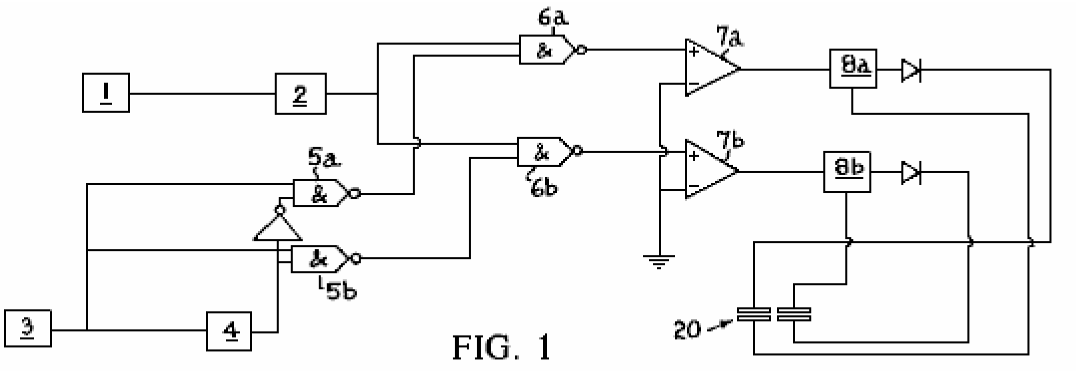

FIG. 1

Fig.1 is a circuit diagram of fracture cell apparatus according to the invention;

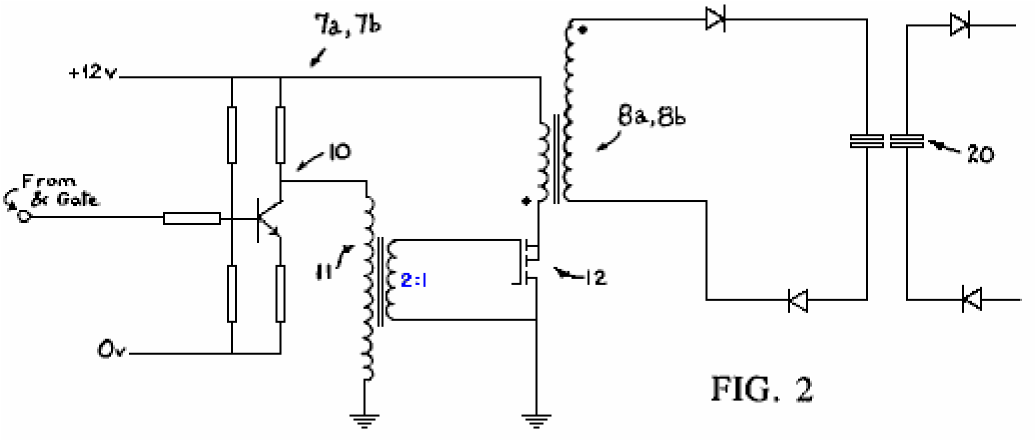

FIG. 2

Fig.2 shows in more detail a part of the circuit diagram of Figure 1;

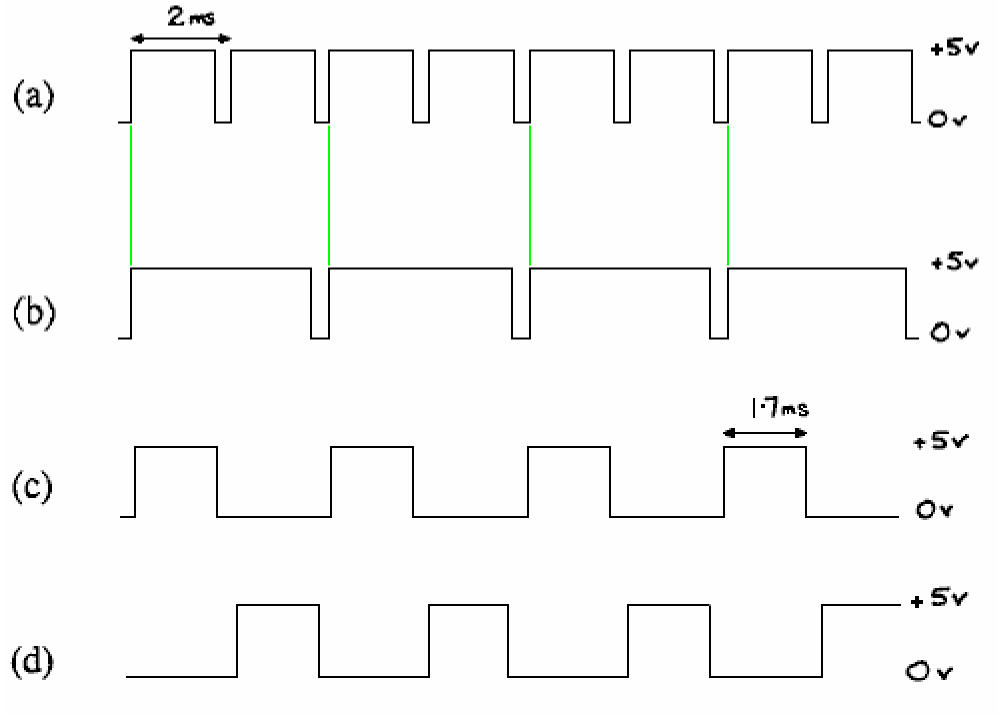

FIG. 3

Fig.3 shows the different waveforms at various parts of the circuit diagram of **Fig.1**;

FIG. 4

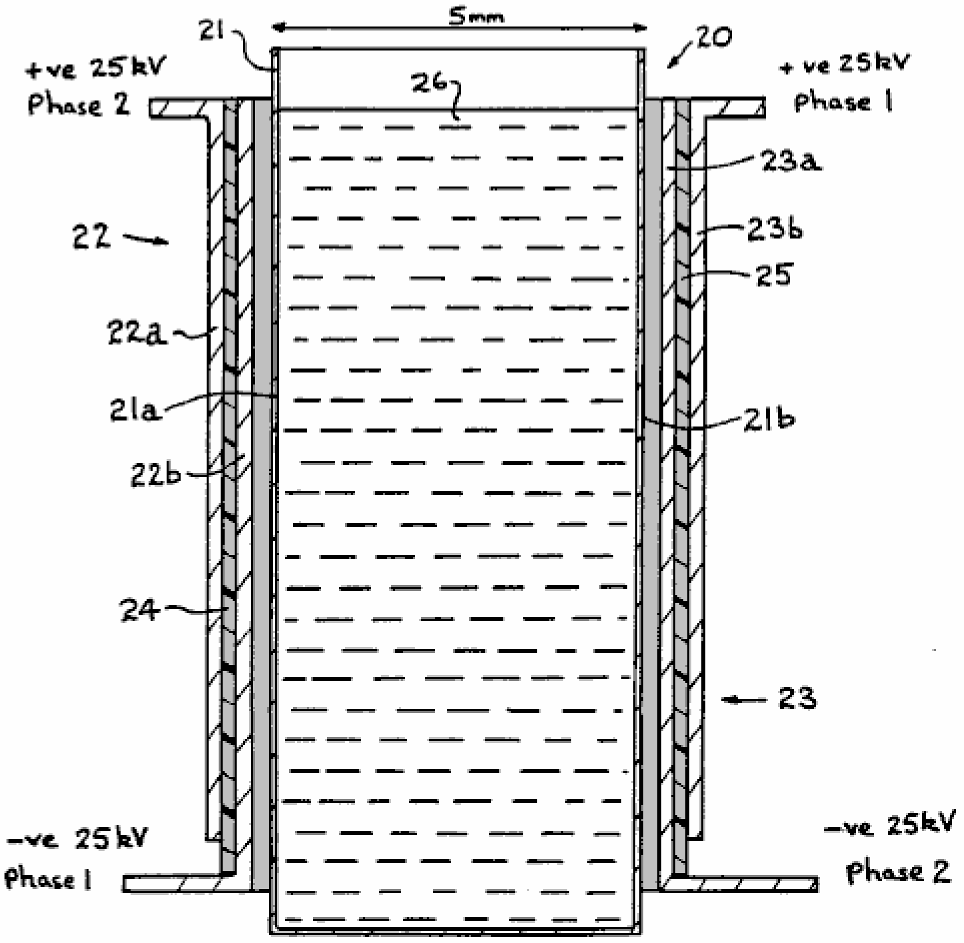

Fig.4 is a schematic diagram of a fracture cell for use in fracture cell apparatus according to the invention,

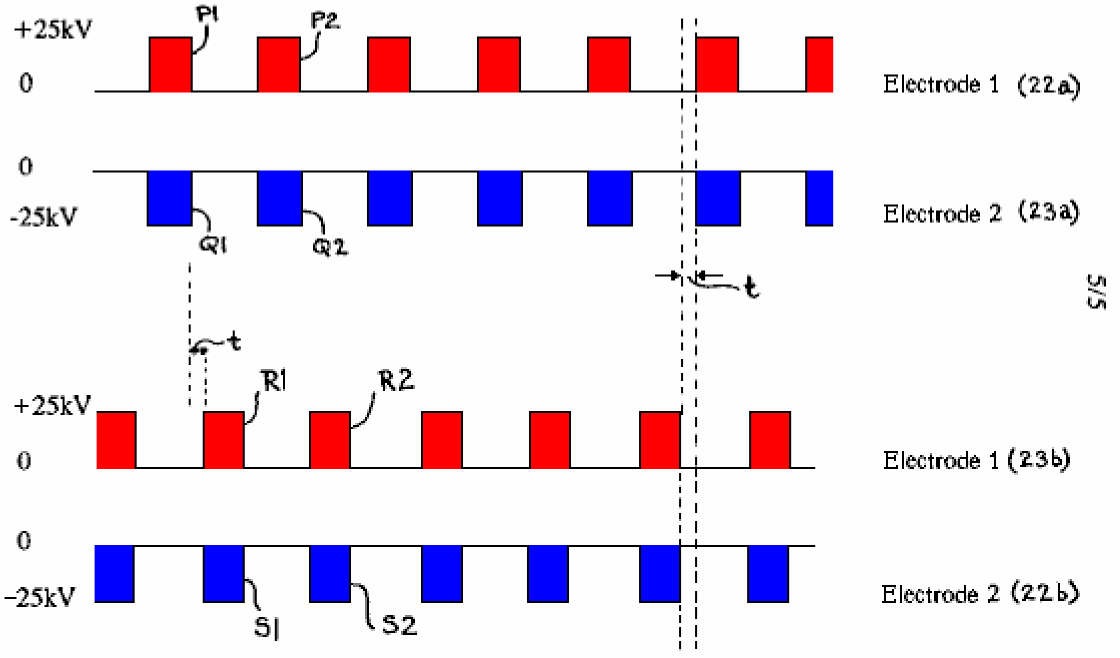

FIG. 5

Fig.5 shows trains of pulses applied to electrodes of the fracture cell apparatus according to the invention.

If a large electric field is applied across a pair of electrode plates positioned either side of a cell containing water, disruption of the water molecules will occur. Such disruption yields hydrogen nuclei and HO- ions. Such a molecular disruption is of little interest in terms of obtaining a usable result from the cell. A proton-rich zone exists for as long as the field exists and quickly re-establishes equilibrium ion-product when the field is removed.

One noticeable side-effect, however, is that the hydroxyl ions (which will migrate to the +ve charged plate) are stripped of electrons as they approach the cell boundary. Any negatively-charged ion will exhibit this behaviour in a strong enough potential well, but the OH ions have a strong tendency to such dissociation. This results, momentarily, in a region of negative-charge close to the positive cell boundary. Thus, on opposite sides of the active cell, there are hydrogen nuclei (free proton zone) and displaced electrons (-ve charge zone), both tending to increase in density closer to the charged plates.

If, at this point, the charge is removed from the plates, there is a tendency for the charge-zones to move, albeit very slowly, towards the centre of the active cell. The ion-transit rates of free electrons and of hydrogen nuclei are, however, some two orders of magnitude greater than either H30+ ions or OH ions.

If the charges are now replaced on the plates, but with opposite polarity, the interesting and potentially useful aspect of the process is revealed. Hydrogen nucleus migration is accelerated in the direction of the new -ve plate and free electron migration takes place towards the new +ve plate. Where there is a sufficient concentration of both species, including the accumulations due to previous polarity changes, monatomic hydrogen is formed with the liberation of some heat energy. Normal molecular association occurs and H2 gas bubbles off from the cell.

Also existing OH radicals are further stripped of hydrogen nuclei and contribute to the process. Active, nascent 0-- ions rapidly lose their electronic space charge to the +ve field and monatomic oxygen forms, forming the diatomic molecule and similarly bubbling off from the cell.

Thus, the continuous application of a strong electric field, changing in polarity every cycle, is sufficient to disrupt water into its constituent gaseous elements, utilising a small fraction of the energy required in conventional electrolysis or chemical energetics, and yielding heat energy of the enthalpy of formation of the diatomic bonds in the hydrogen and oxygen.

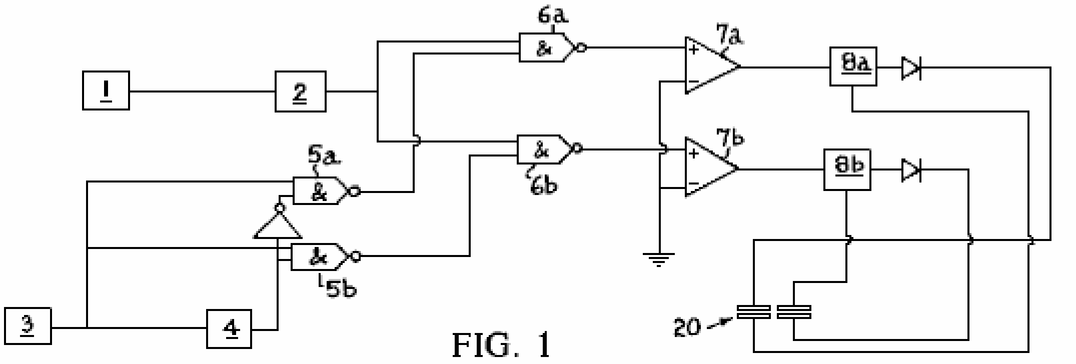

FIG. 1

Apparatus for performing the above process is described below. In particular, electronic circuitry to effect the invention is shown in the simplified block diagram of **Fig.1**. In **Fig.1** a pulse-repetition frequency (PRF) generator **1** comprises an astable multivibrator clock running at a frequency which is preset for any application, but able to be varied across a range of approximately 5-30 kHz. The generator **1** drives, by triggering with the trailing edge of its waveform, a pulse-width (PW) timer **2**.

The output of the timer **2** is a train of regular pulses whose width is determined by the setting of timer **2** and whose repetition frequency is set by the PRF generator **1**.

A gate clock **3** comprises a simple 555-type circuit which produce a waveform (see **Fig.3a**) having a period of 1 to 5 ms, e.g. 2 ms as shown in **Fig.3a**. The duty cycle of this waveform is variable from 50% to around 95%. The waveform is applied to one input of each of a pair of AND gates **5a** and **5b** and also to a binary divide-by-two counter **4**. The output of the counter **4** is shown in **Fig.3b**.

The signal from the divide-by-two counter **4** is applied directly to the AND gate **5b** serving phase-2 driver circuitry **7a** but is inverted before application to the AND gate **5a** serving phase-l driver circuitry **7a**. The output of the AND gate **5a** is therefore ((CLOCK and (NOT (CLOCK)/2)) and the output of the AND gate **5b** is ((CLOCK) and (CLOCK/2)), the waveforms, which are applied to pulse-train gates **6a** and **6b**, being shown in **Fig.3c** and **Fig.3d**.

Trains of 5-30 kHz pulses are applied to drive amplifiers **7a** and **7b** alternately, with a small "off"-period during which no pulses are applied to either amplifier. The duration of each "off" period is dependent upon the original duty cycle of the clock timer **3**. The reason for the small "off" period in the driver waveforms is to prevent local corona arc as the phases change over each cycle.

The drive amplifiers **7a** and **7b** each use a BC182L transistor **10** (see **Fig.2**), small toroidal 2:1 pulse transformer **11** and a BUZll power-MOSFET **12** and apply pulse packets across the primary windings of their respective 25 kV line-output transformers **8a** and **8b** to produce an EHT ac voltage of high frequency at their secondary windings. The secondary windings are 'lifted' from system ground and provide, after simple half-wave rectification, the applied field for application to cell **20** (see **Fig.4**).

Cell **20** comprises a container **21** having walls **21a**, **21b** of electrically insulating material, e.g. a thermoplastics material, such as polymethyl methacrylate, typically spaced about 5 mm apart, and bipolar cell electrodes generally designated **22** and **23** and typically constructed from aluminium foil, positioned outside the walls **21a** and **21b**. Each bipolar cell electrode comprises a pair of electrode plates **22a** and **22b** (or **23a** and **23b**) for each side of the cell **20** separated from each other by an electrically insulating layer **24** (or **25**) , e.g. of polycarbonate plastics material about 0.3 mm thick.

The electrode plates **22a** and **23a** form one set (set A) of electrode plates positioned on opposite sides of container **21** and the electrode plates **22b** and **23b** form another set of electrode plates positioned on opposite sides of the container **21**. An insulating layer **25**, e.g. of polycarbonate material, similar to the insulating layers **24a** or **24b** may be positioned between each bipolar cell electrode **22** (or **23**) and its adjacent container wall **21a**(or **21b**). A liquid electrolyte, preferably water, is placed in the container **21**.

In use, a train of positive pulses is applied to the electrode plates **22a** and **23b** and a train of negative pulses is applied to the electrode plates **23a** and **22b**. The timing of the pulses is shown schematically in **Fig.5**, which illustrates that, for set A (or for set B), whenever a positive pulse is applied to electrode plate **22a** (or **23b**), a negative pulse is also applied to electrode plate **23a** (or **22b**). However the pulses applied to the electrode plate set A are "out of phase" with the pulses applied to the electrode plate set B. In each train of pulses, the duration of each pulse is less than the gap between successive pulses.

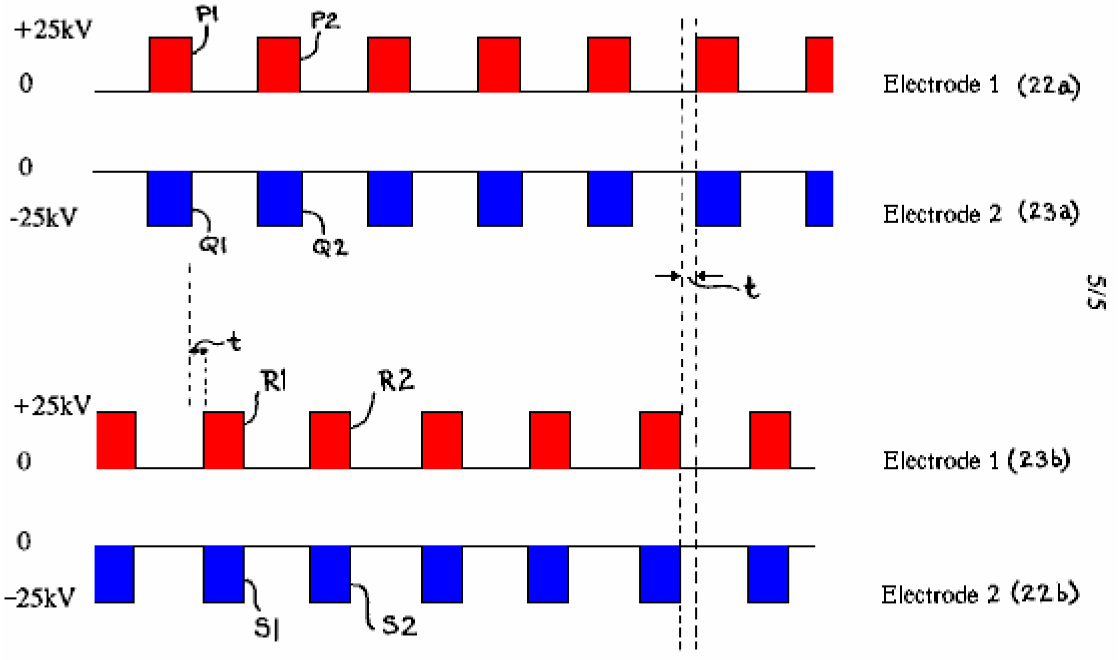

FIG. 5

By arranging for the pulses of electrode plate set B to be applied in the periods when no pulses are applied to the electrode plate set A, the situation arises where pairs of pulses are applied successively to the electrode plates of different sets of electrode plates, there being a short interval of time when no pulses are applied between each successive application of pulses to pairs of electrode plates. In other words, looking at **Fig.5**, pulses **P1** and **Q1** are applied at the same time to the electrode plates **22a** and **23a**. The pulses **P1** and **Q1** are of the same pulse length and, at the end of their duration, there is a short time period **t** before pulses **R1** and **S1** are applied to the electrode plates **23b** and **22b**.

The pulses **R1** and **S1** are of the same pulse length as the pulses **P1** and **Q1** and, at the end of their duration, there is a further time **t** before the next pulses **P2** and **Q2** are applied to the electrode plates **22a** and **23a**. It will be appreciated that whenever a pulse of one sign is applied to one of the electrode plates of a set, a pulse of the opposite sign is applied to the other electrode plate of that set.

Furthermore, by switching from one to the other electrode plate set the polarities applied across the container are repeatedly switched resulting in an "alternating" electric field being created across the "liquid dielectric" water in the container.

The Electrolyser of Spiro Spiros

Patent WO 9528510 26th October 1995 Inventor: Spiro Ross Spiros

IMPROVEMENTS IN ELECTROLYSIS SYSTEMS & THE AVAILABILITY OF OVER-UNITY ENERGY

This patent application shows the details of an electrolyser system which it is claimed, produces greater output than the input power needed to operate it.

ABSTRACT

A looped energy system for the generation of excess energy available to do work is disclosed. The system comprises an electrolysis cell unit **150** receiving a supply of water to liberate separated hydrogen gas **154** and oxygen **156** by electrolysis driven by a DC voltage **152** applied across respective anodes and cathodes of the cell unit **150**. A hydrogen gas receiver **158** receives and stores hydrogen gas liberated by the cell unit **150**, and an oxygen gas receiver **160** receives and stores oxygen gas liberated by the cell unit **150**. A gas expansion device **162** expands the stored gases to recover expansion work, and a gas combustion device **168** mixes and combusts the expanded hydrogen gas and oxygen gas to recover combusted work. A proportion of the sum of the expansion work and the combustion work sustains electrolysis of the cell unit to retain operational gas pressure in the gas receivers **158**, **160** such that the energy system is self-sustaining, and there is excess energy available from the sum of energies.

TECHNICAL FIELD OF THE INVENTION

The present invention relates to the generation of hydrogen gas and oxygen gas from water, either as an admixture or as separated gases, by the process of electrolysis, and relates further to applications for the use of the liberated gas. Embodiments of the invention relate particularly to apparatus for the efficient generation of these gases, and to use of the gases in an internal combustion engine and an implosion pump. The invention also discloses a closed-loop energy generation system where latent molecular energy is liberated as a form of 'free energy' so the system can be self-sustaining.

Reference is made to commonly-owned International patent application No. PCT/AU94/000532, having the International filing date of 6 September 1994.

Background Art

The technique of electrolysing water in the presence of an electrolyte such as sodium hydroxide (NaOH) or potassium hydroxide (KOH) to liberate hydrogen and oxygen gas (H2, 02) is well known. The process involves applying a DC potential difference between two or more anode/cathode electrode pairs and delivering the minimum energy required to break the H-O bonds (i.e. 68.3 kcal per mole @ STP).

The gases are produced in the stoichiometric proportions for O2:H2 of 1:2 liberated respectively from the anode (+) and cathode (-).

Reference can be made to the following texts:
"Modern Electrochemistry, Volume 2, John O'M. Bockris and Amulya K.N. Reddy, Plenum Publishing Corporation",
"Electro-Chemical Science, J. O'M. Bockris and D.M. Drazic, Taylor and Francis Limited" and
"Fuel Cells, Their Electrochemistry, J. O'M. Bockris and S. Srinivasan, McGraw-Hill Book Company".

A discussion of experimental work in relation to electrolysis processes can be obtained from "Hydrogen Energy, Part A, Hydrogen Economy Miami Energy Conference, Miami Beach, Florida, 1974, edited by T. Nejat Veziroglu, Plenum Press". The papers presented by J. O'M. Bockris on pages 371 to 379, by F.C. Jensen and F.H. Schubert on pages 425 to 439 and by John B. Pangborn and John C. Sharer on pages 499 to 508 are of particular relevance.

On a macro-scale, the amount of gas produced depends upon a number of variables, including the type and concentration of the electrolytic solution used, the anode/cathode electrode pair surface area, the electrolytic resistance (equating to ionic conductivity, which is a function of temperature and pressure), achievable current density and anode/cathode potential difference. The total energy delivered must be sufficient to disassociate the water ions to generate hydrogen and oxygen gases, yet avoid plating (oxidation/reduction) of the metallic or conductive non-metallic materials from which the electrodes are constructed.

DISCLOSURE OF THE INVENTION

The invention discloses a looped-energy system for the generation of excess energy available to do work, the said system comprising of:

An electrolysis cell unit receiving a supply of water for liberating separated hydrogen gas and oxygen gas by electrolysis due to a DC voltage applied across respective anodes and cathodes of the cell;

A hydrogen gas receiver to receive and store the hydrogen gas liberated by the electrolysis cell;

An oxygen gas receiver to receive and store the oxygen gas liberated by the electrolysis cell;

A gas-expansion chamber to allow the expansion of the stored gases to recover expansion work; and

A gas-combustion mechanism for mixing and combusting the expanded hydrogen and oxygen gases to recover combustion work; and wherein a proportion of the sum of the expansion work and the combustion work sustains the electrolysis of the electrolysis cell in order to retain the operational gas pressure in the hydrogen and oxygen gas receivers so that the energy system is self-sustaining and there is excess energy available.

The invention further discloses a method for the generation of excess energy available to do work by the process of electrolysis, said method comprising the steps of: electrolysing water by a DC voltage to liberate separated hydrogen gas and oxygen gas; separately receiving and storing the hydrogen and oxygen gases in a manner to be self-pressuring; separately expanding the stored gas to recover expansion energy; burning the expanded gases to recover combustion energy; and applying a portion of the sum of the expansion work and the combustion work as the DC voltage to retain operational gas pressures and sustain the electrolysis, there being excess energy available to do this.

The invention also discloses an internal combustion engine powered by hydrogen and oxygen comprising of:

At least one cylinder and

At least one reciprocating piston within the cylinder;

A hydrogen gas input port in communication with the cylinder for receiving a supply of pressurised hydrogen;

An oxygen gas input port in communication with the cylinder for receiving a supply of pressurised oxygen; and

An exhaust port in communication with the cylinder and wherein the engine can be operated in a two-stroke manner whereby, at the top of the stroke, hydrogen gas is supplied through the respective inlet port to the cylinder driving the piston downwards, oxygen gas then is supplied through the respective inlet port to the cylinder to drive the cylinder further downwards, after which time self-detonation occurs and the piston moves to the bottom of the stroke and upwards again with the exhaust port opened to force out the water vapour resulting from the detonation.

The invention also discloses an implosion pump comprising of;

A combustion chamber interposed, and in communication with,

An upper reservoir and a lower reservoir separated by a vertical distance across which water is to be pumped, this chamber receiving admixed hydrogen and oxygen at a pressure sufficient to lift a volume of water the distance from there to the top reservoir, the gas in the chamber then being ignited to create a vacuum in the chamber to draw water from the lower reservoir to fill the chamber, whereupon a pumping cycle is established and can be repeated.

The invention also discloses a parallel stacked arrangement of cell plates for a water electrolysis unit, the cell plates alternately forming an anode and cathode of the electrolysis unit, and the arrangement including separate hydrogen gas and oxygen gas outlet ports respectively linked to the anode cell plates and the cathode cell plates and extending longitudinally along the plate stack. These outlet ports are arranged so as to be insulated from the anode and cathode plates.

DESCRIPTION OF THE DRAWINGS

Figs.1 1a-16 of noted International application no. PCT/AU94/000532 are reproduced to aid description of the present invention, but herein denoted as Figs.la-6:

Fig.1A and **Fig.1B** show an embodiment of a cell plate:

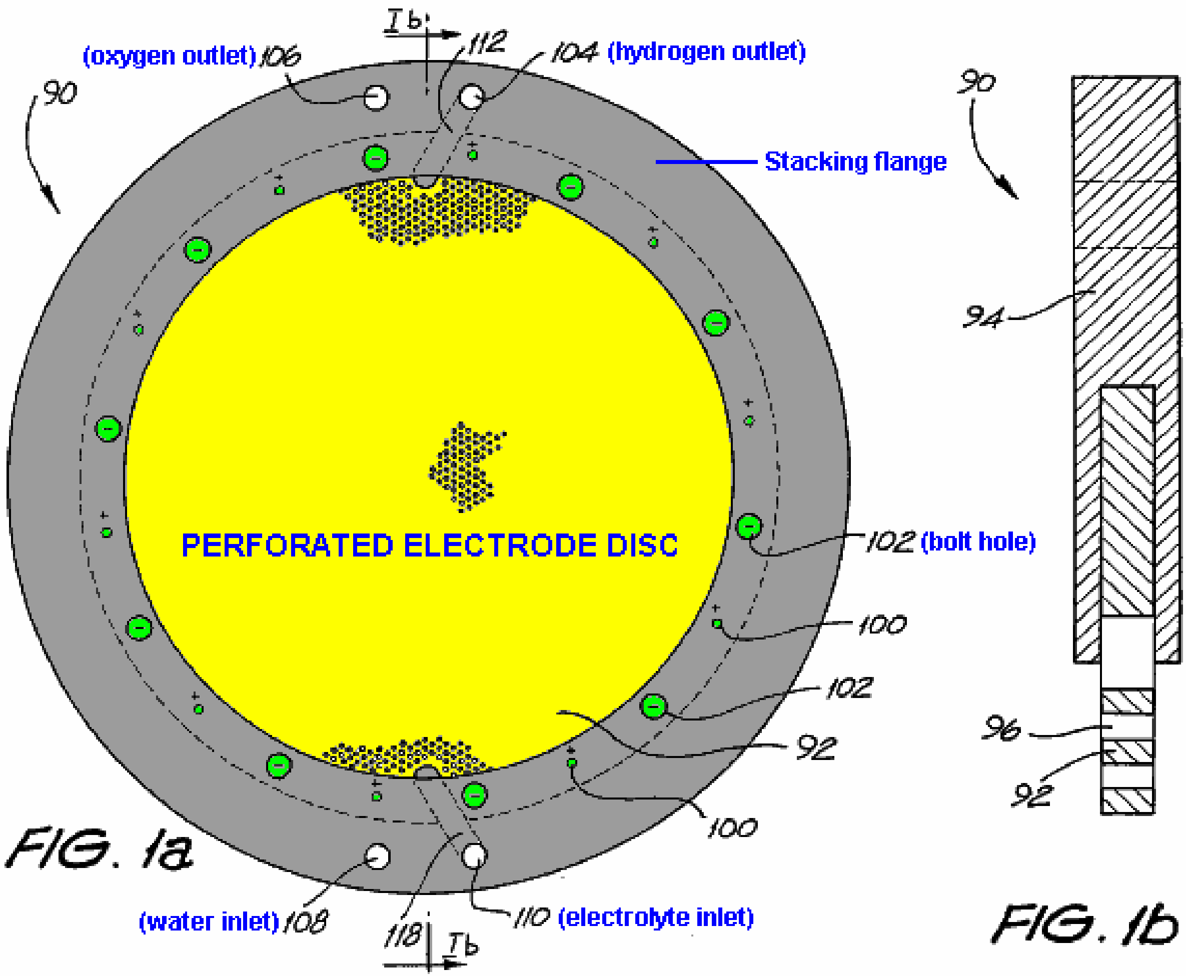

FIG. 1a

FIG. 1b

Fig.2A and **Fig.2B** show a complementary cell plate to that of Fig.lA and Fig1B:

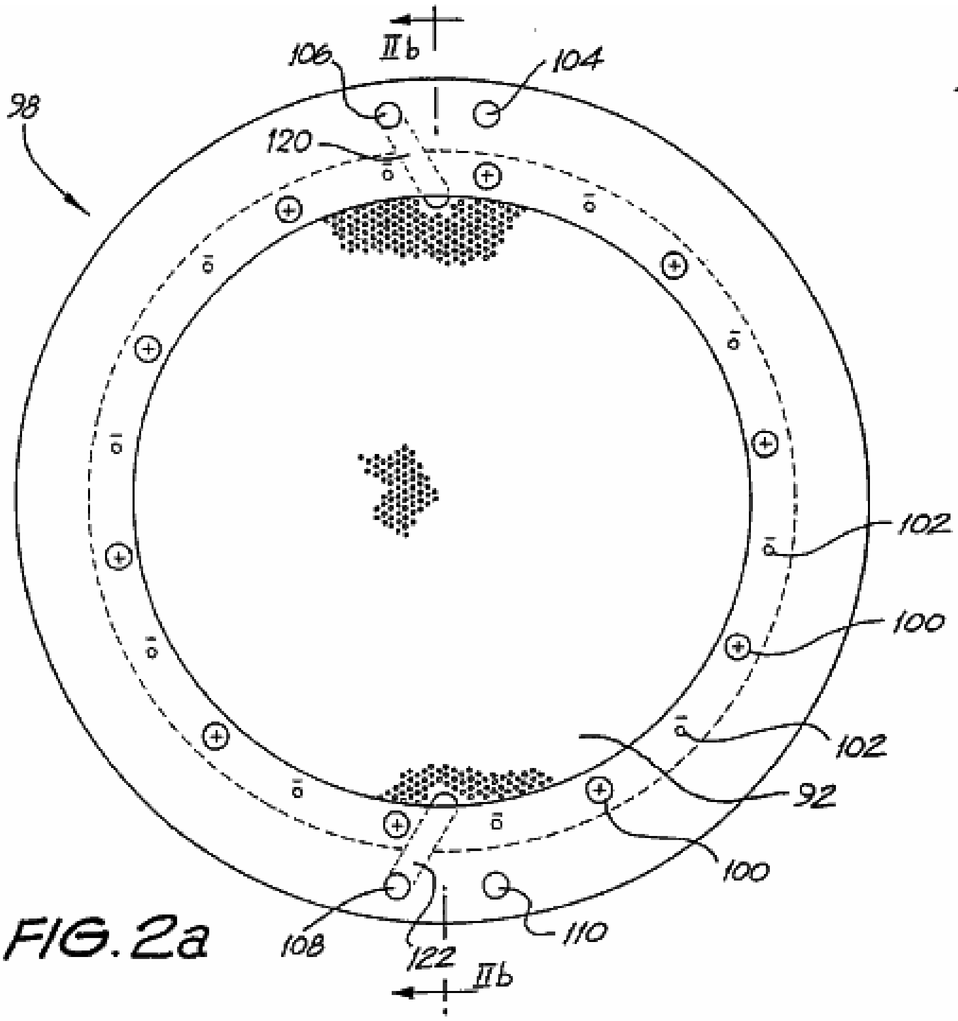

FIG.2a

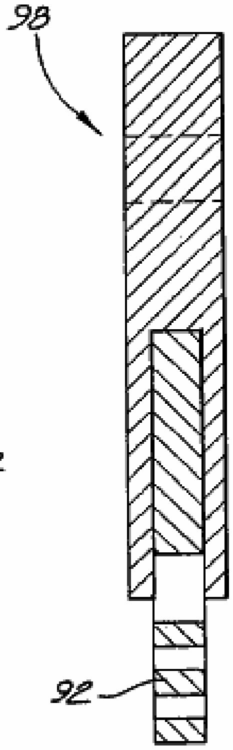

FIG.2b

Fig.3 shows detail of the perforations and porting of the cell plates of Figs. IA,IB, 2A and 2B:

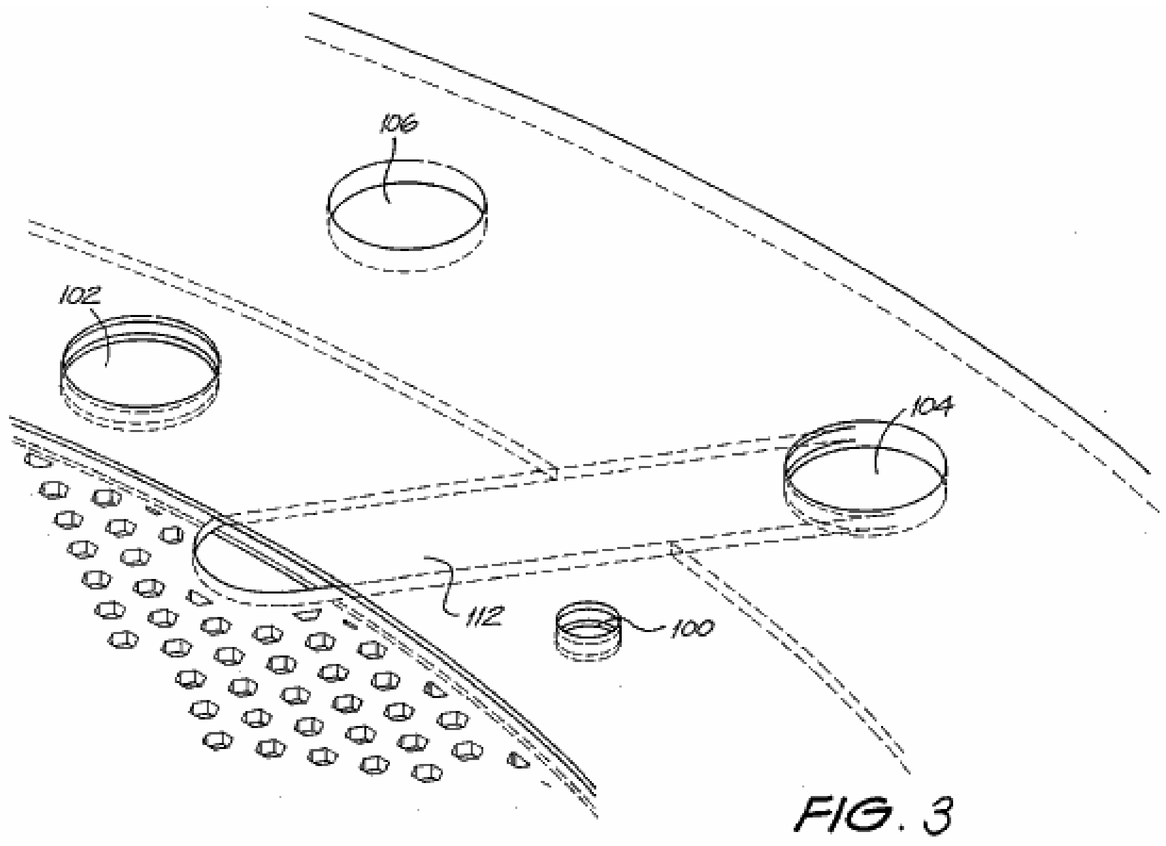

FIG. 3

Fig.4 shows an exploded stacked arrangement of the cell plates of Figs. IA,IB, 2A and 2B:

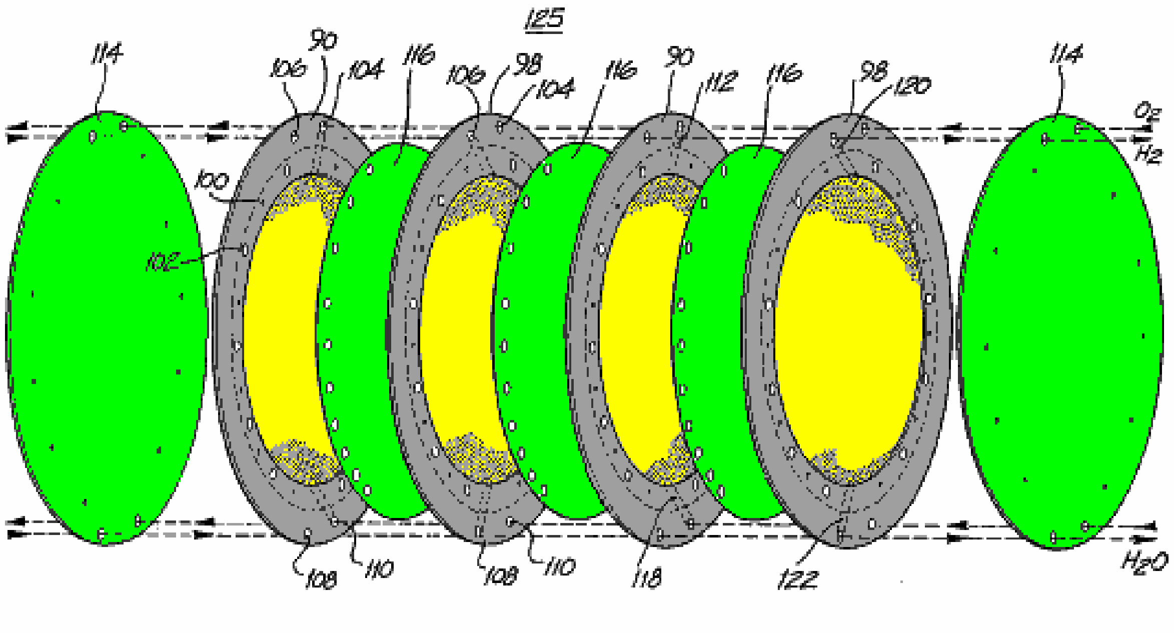

FIG. 4

Fig.5A shows a schematic view of the gas separation system of Fig.4:

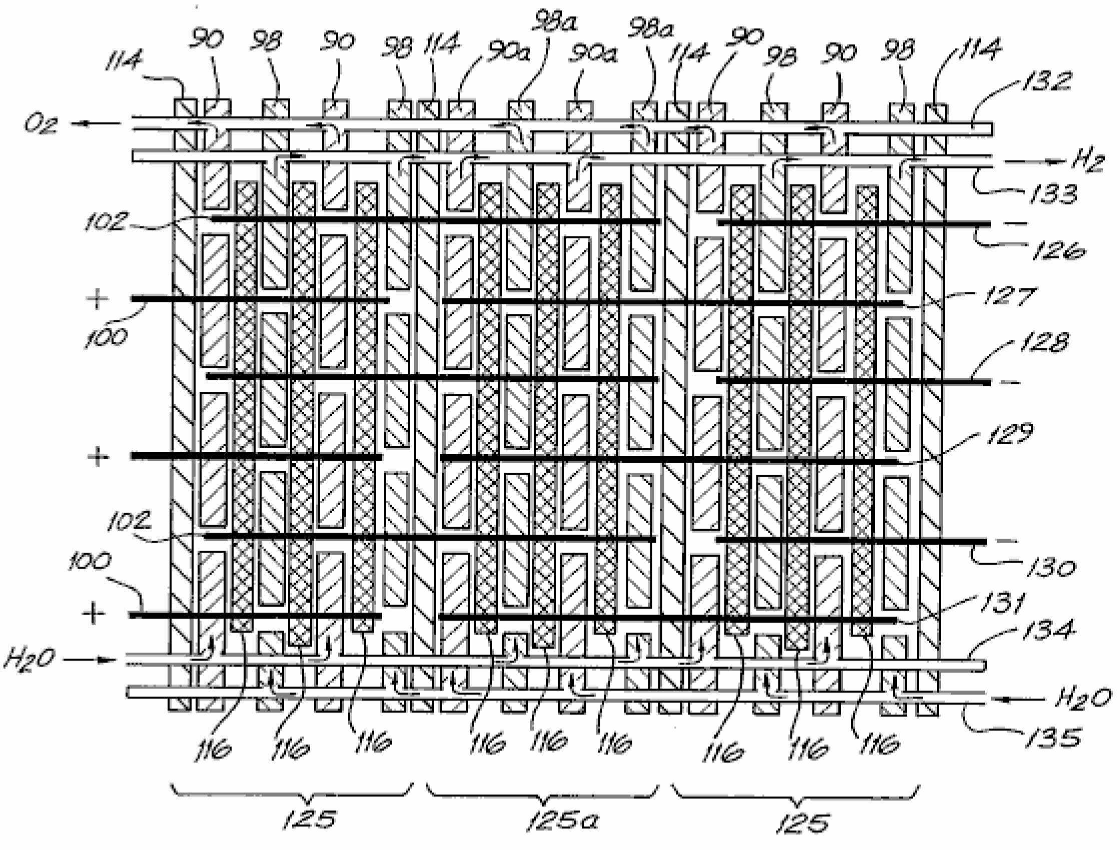

FIG. 5a

Fig.5B shows a stylised representation of Fig.5a:

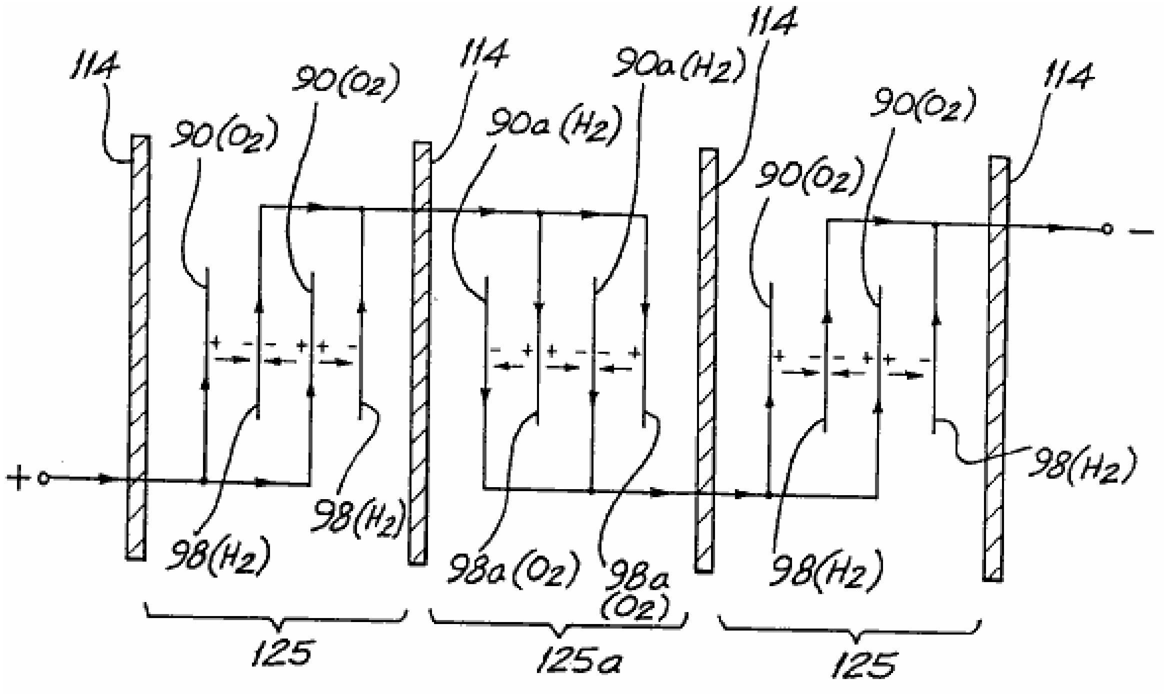

FIG. 5b

Fig.5C shows an electrical equivalent circuit of Fig.5A and

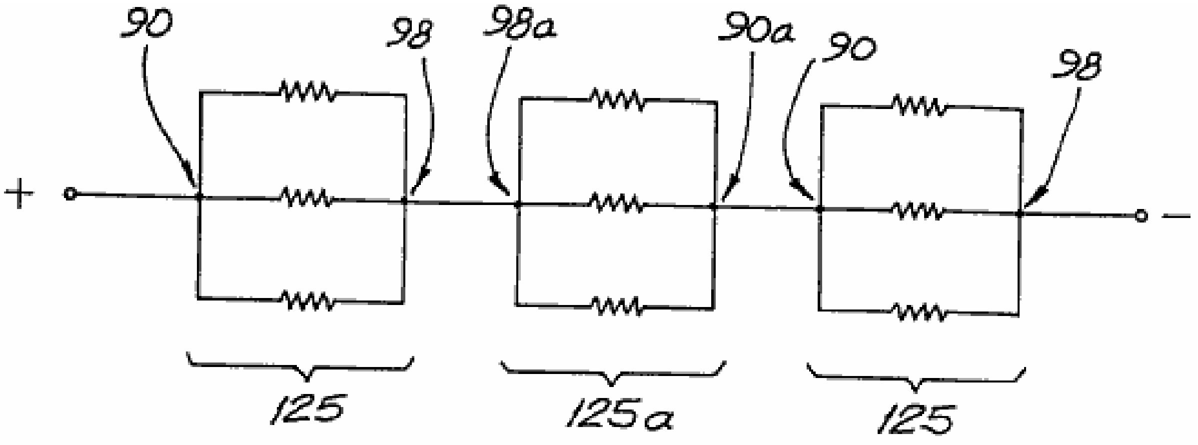

FIG. 5c

Fig.6 shows a gas collection system for use with the cell bank separation system of Figs. 4 and 5a.

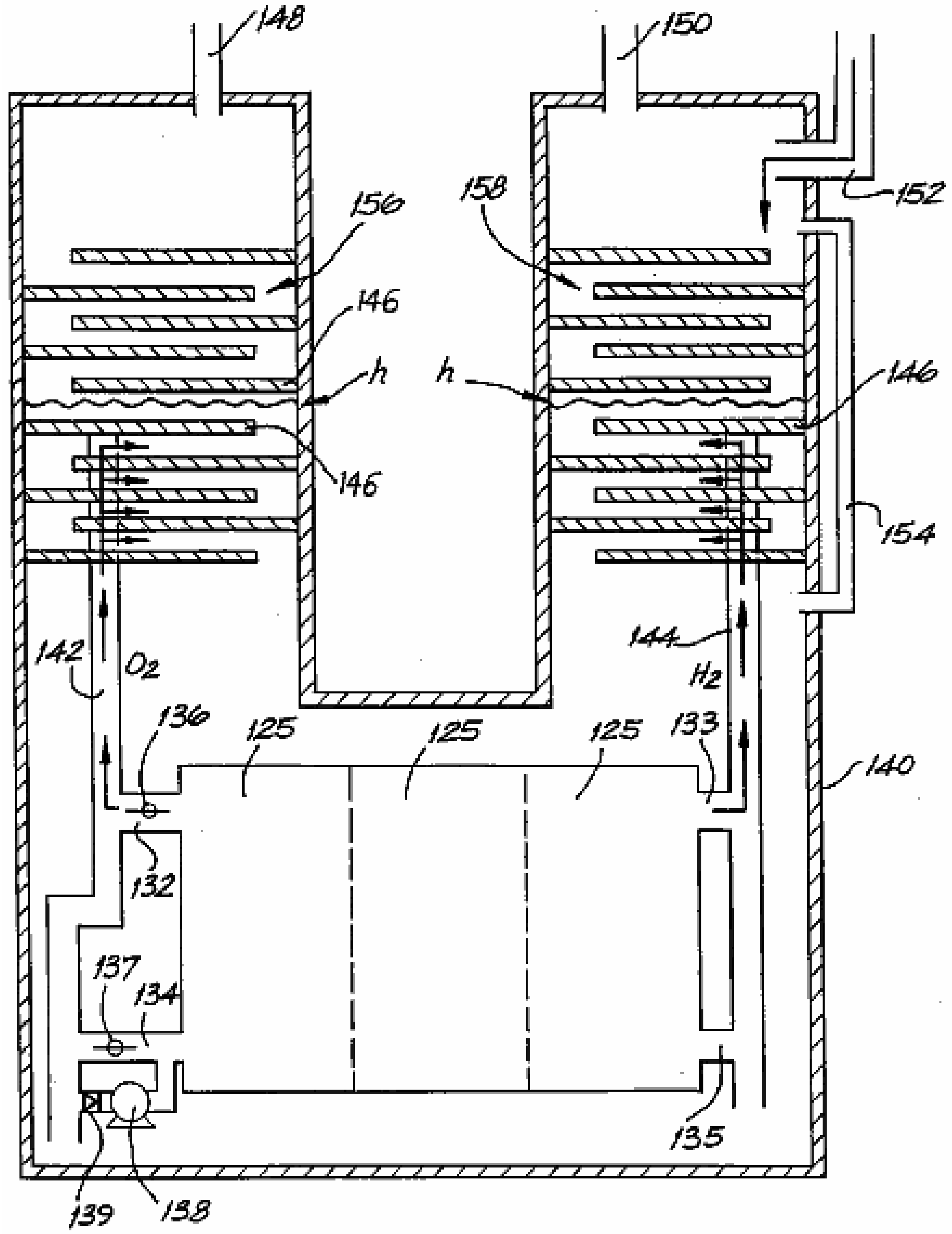

FIG. 6

The remaining drawings are:
Fig.7A and **Fig.7B** are views of a first cell plate:

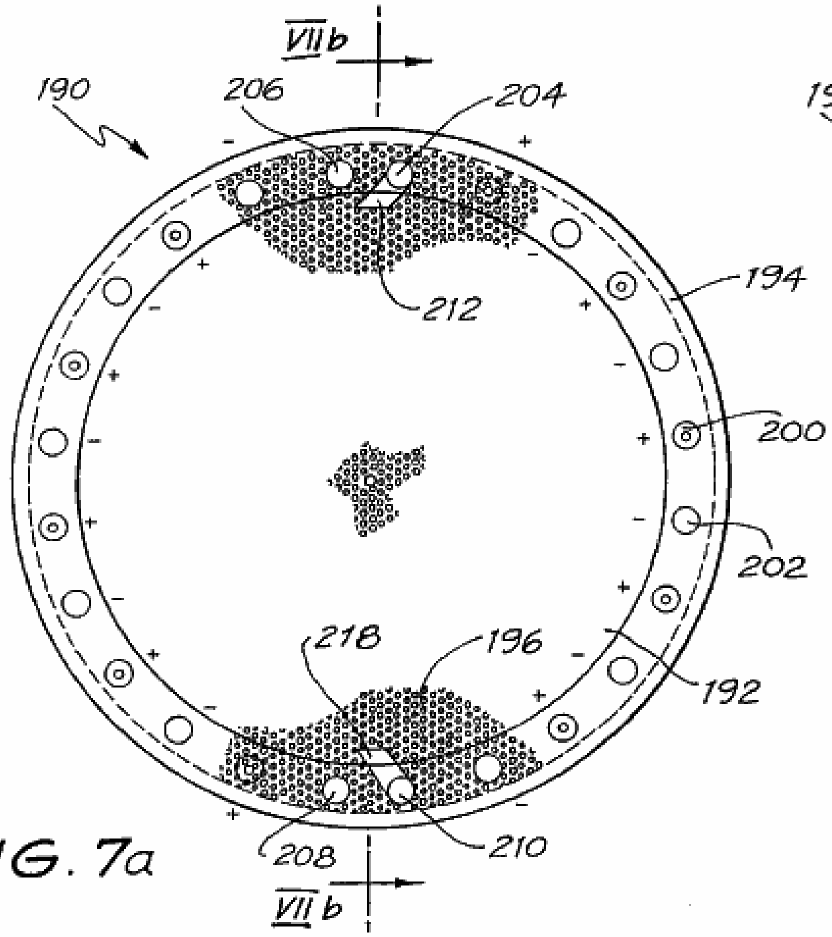

FIG. 7a

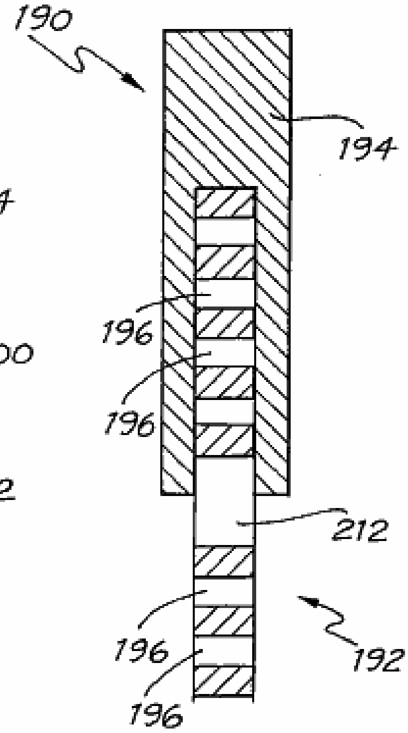

FIG.7b

Fig.8A and **Fig.8B** are views of a second cell plate:

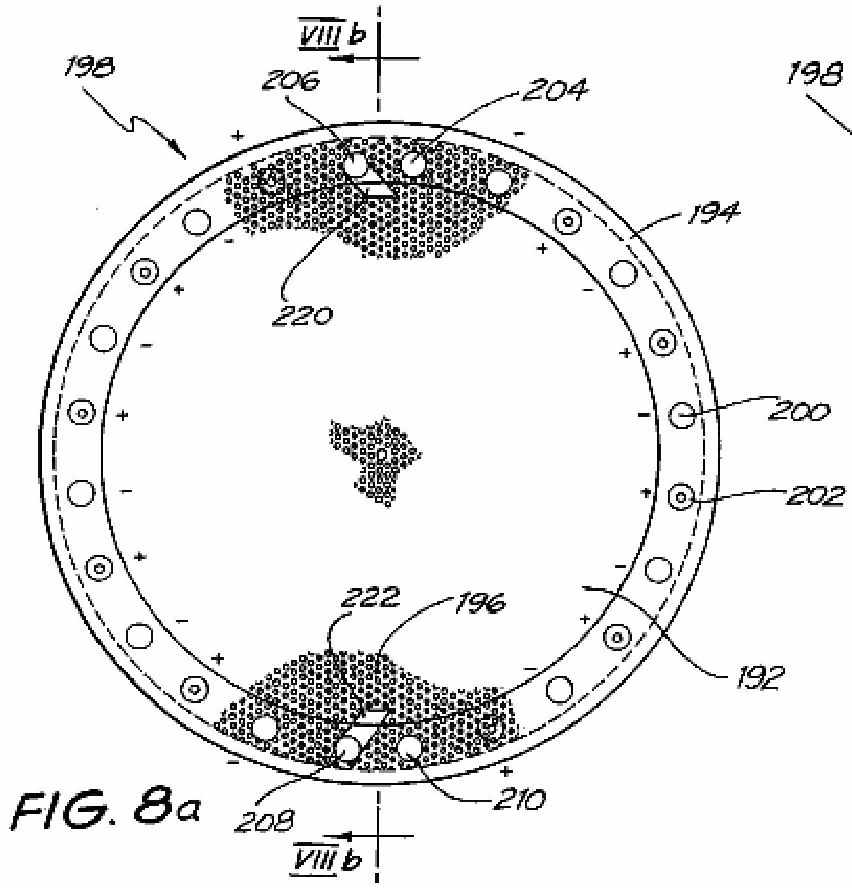

FIG. 8a

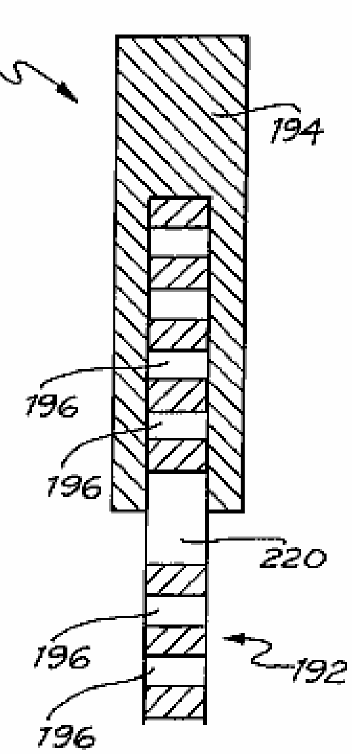

FIG. 8b

Fig.9 shows detail of the edge margin of the first cell plate:

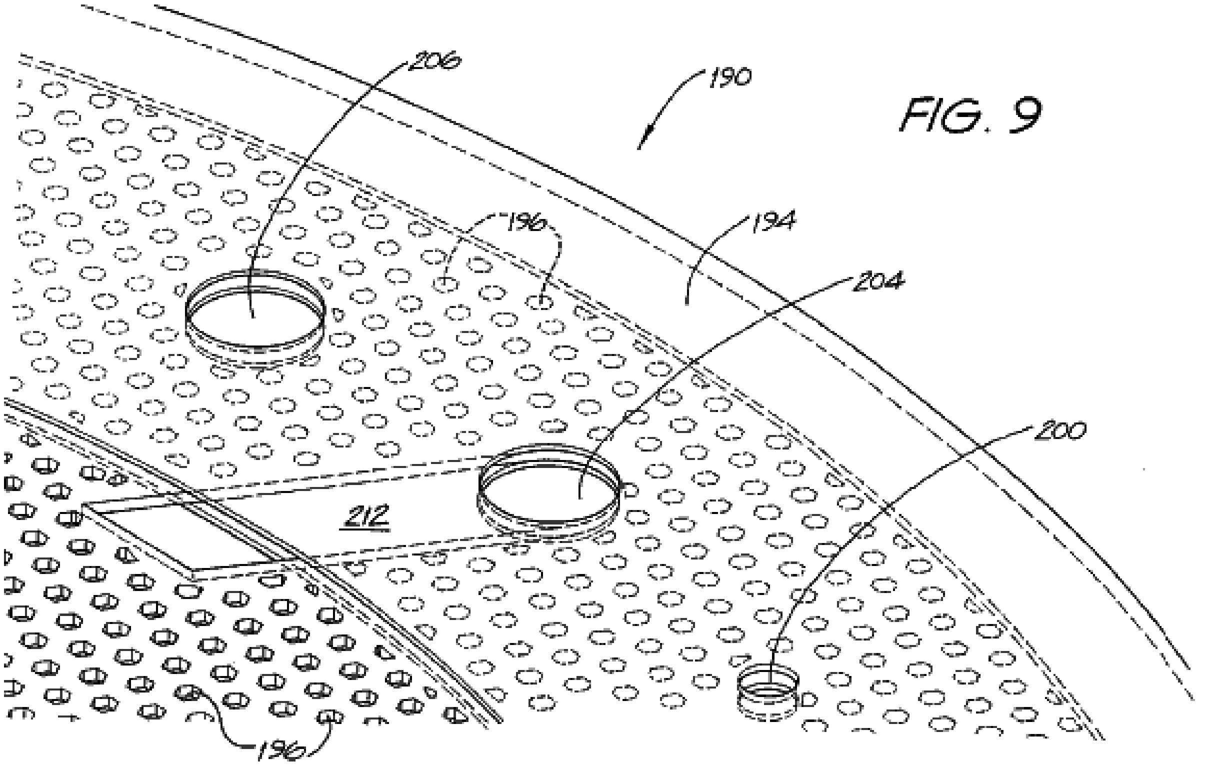

FIG. 9

Fig10 shows an exploded stacked arrangement of the cell plates shown in Fig.7A and Fig.8A:

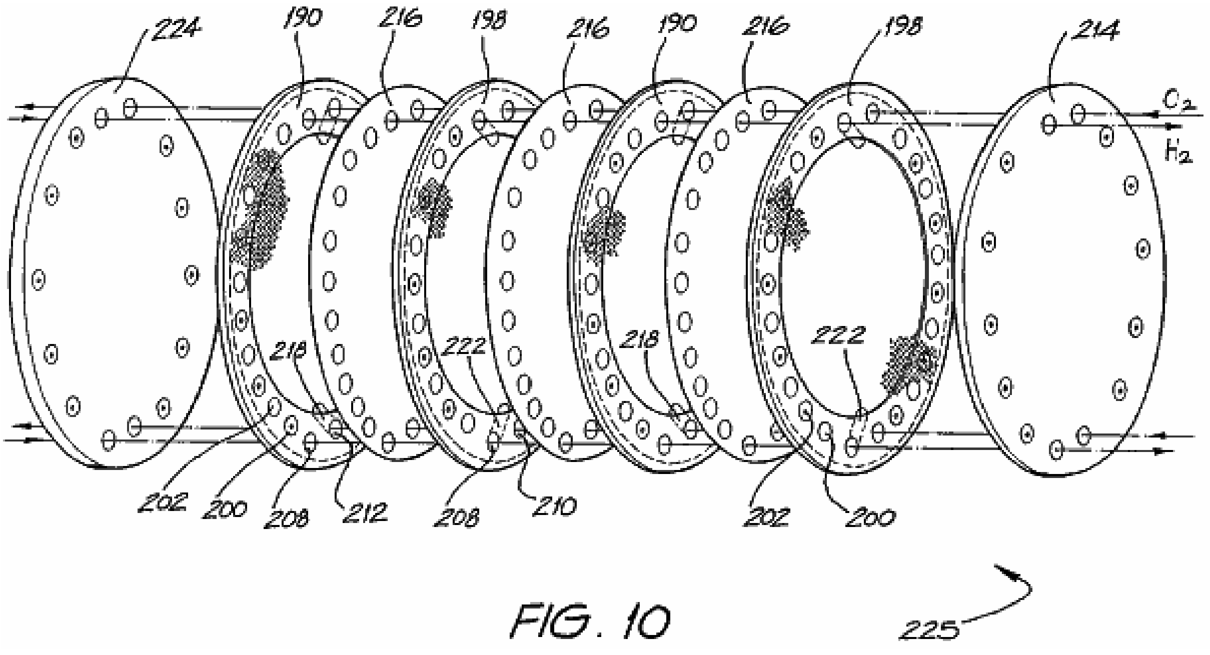

FIG. 10

Fig.11 is a cross-sectional view of three of the stacked cell plates shown in Fig.10 in the vicinity of a gas port:

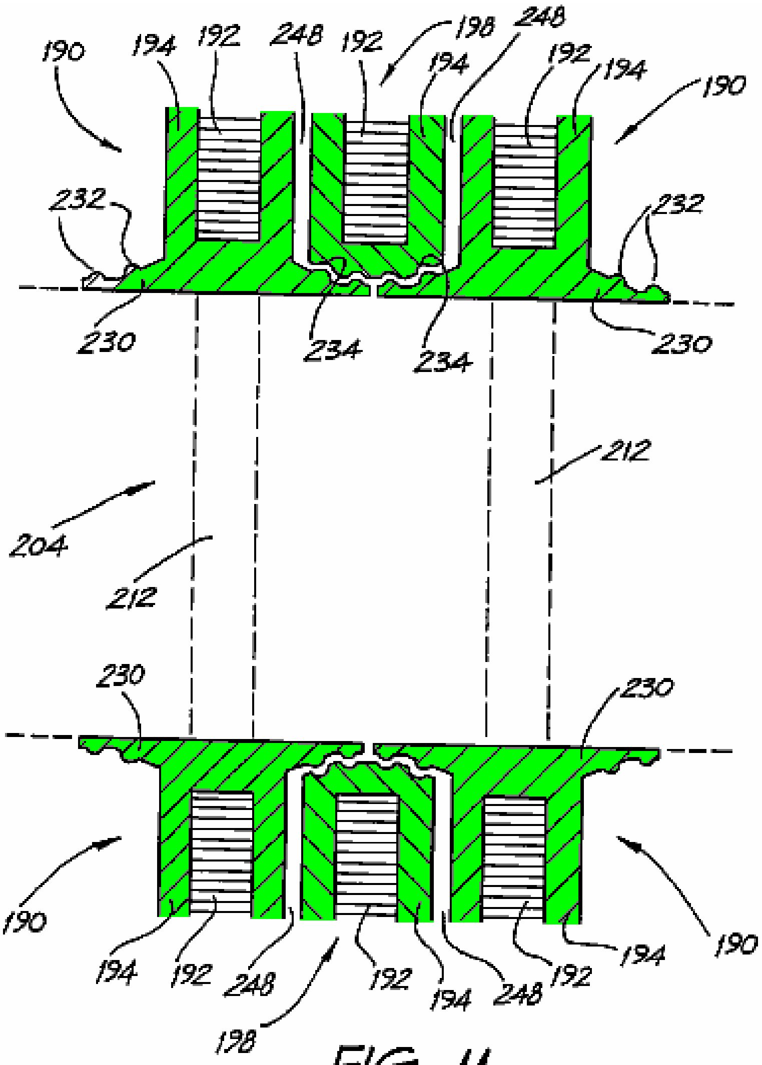

FIG. 11

Fig.12A and **Fig.12B** respectively show detail of the first and second cell plates in the vicinity of a gas port:

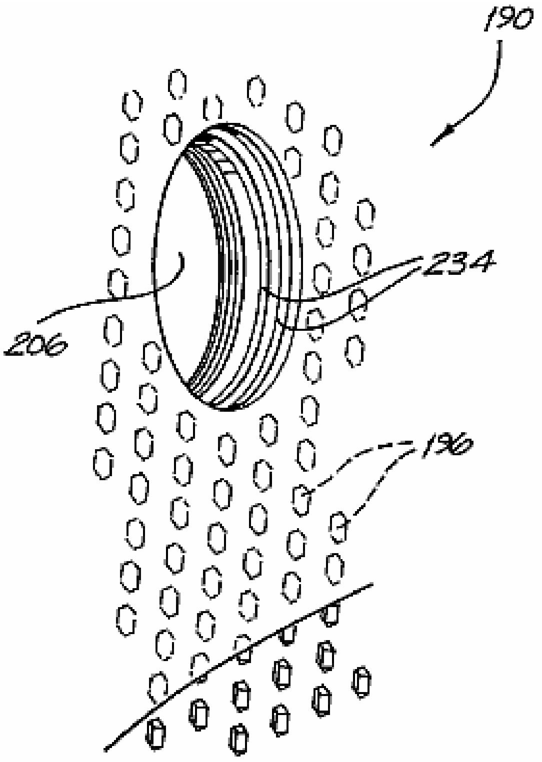

FIG. 12a

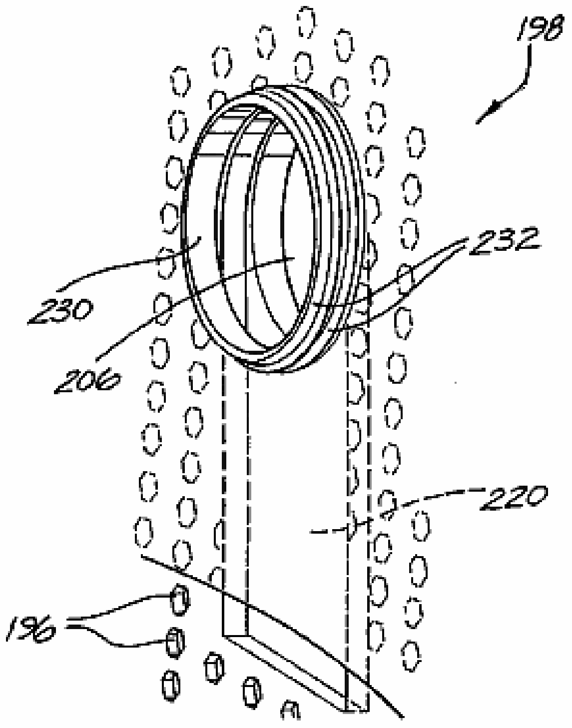

FIG. 12b

Fig.13 is a cross-sectional view of a cell unit of four stacked cell plates in the vicinity of an interconnecting shaft:

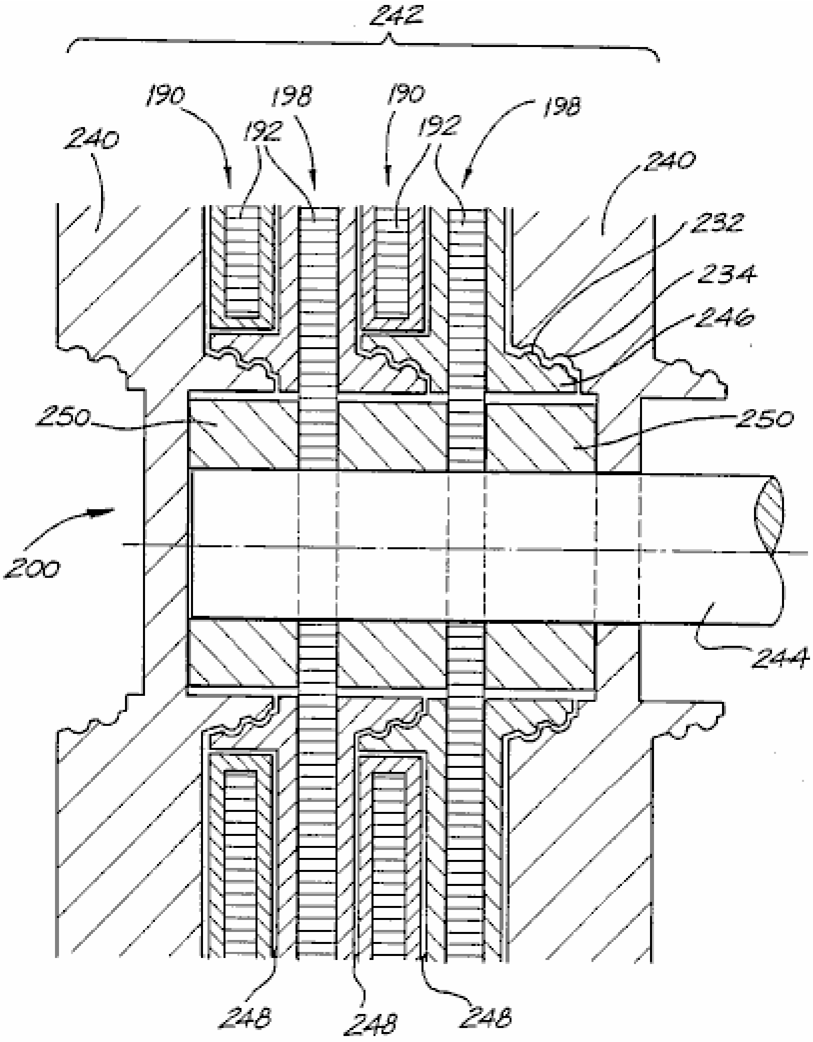

FIG. 13

Fig.14 shows a perspective view of a locking nut used in the arrangement of Fig.13:

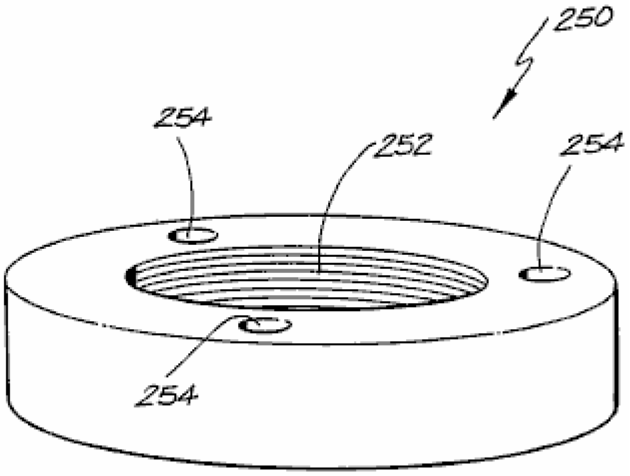

FIG. 14

Fig.15 shows an idealised electrolysis system:

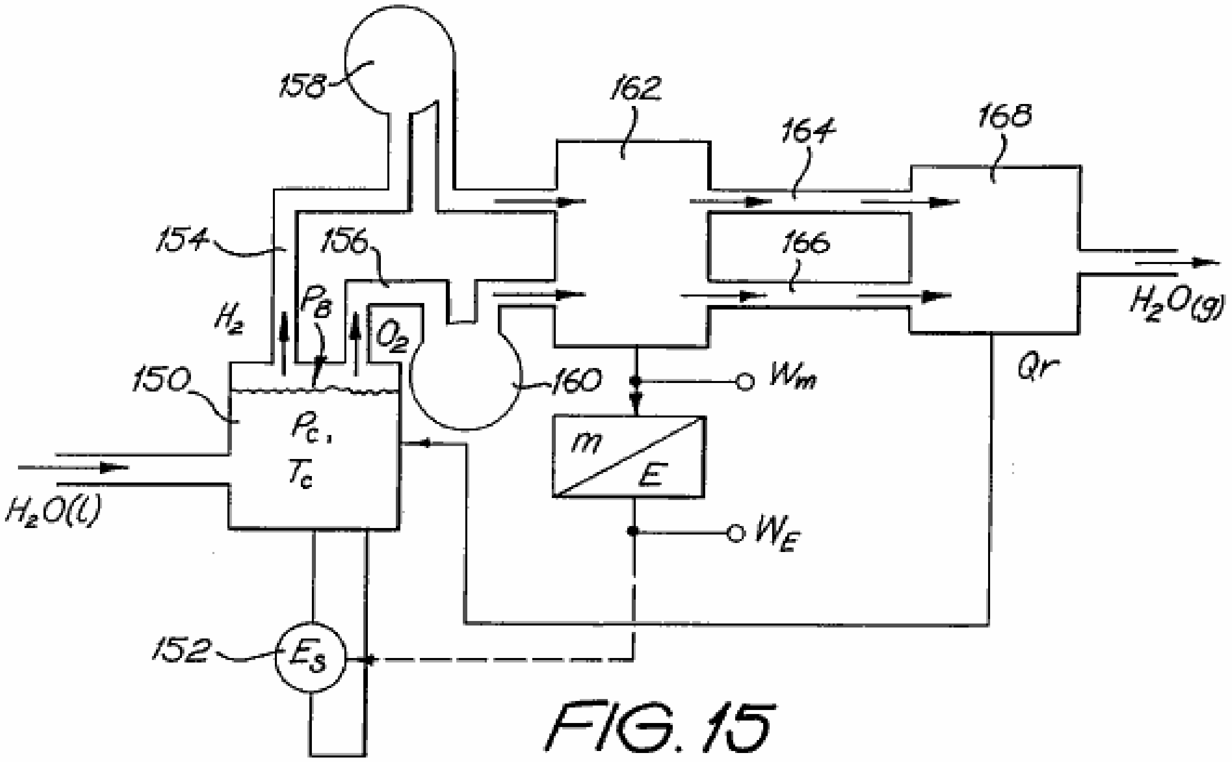

FIG. 15

Figs.16-30 are graphs supporting the system of **Fig.15** and the availability of over-unity energy:

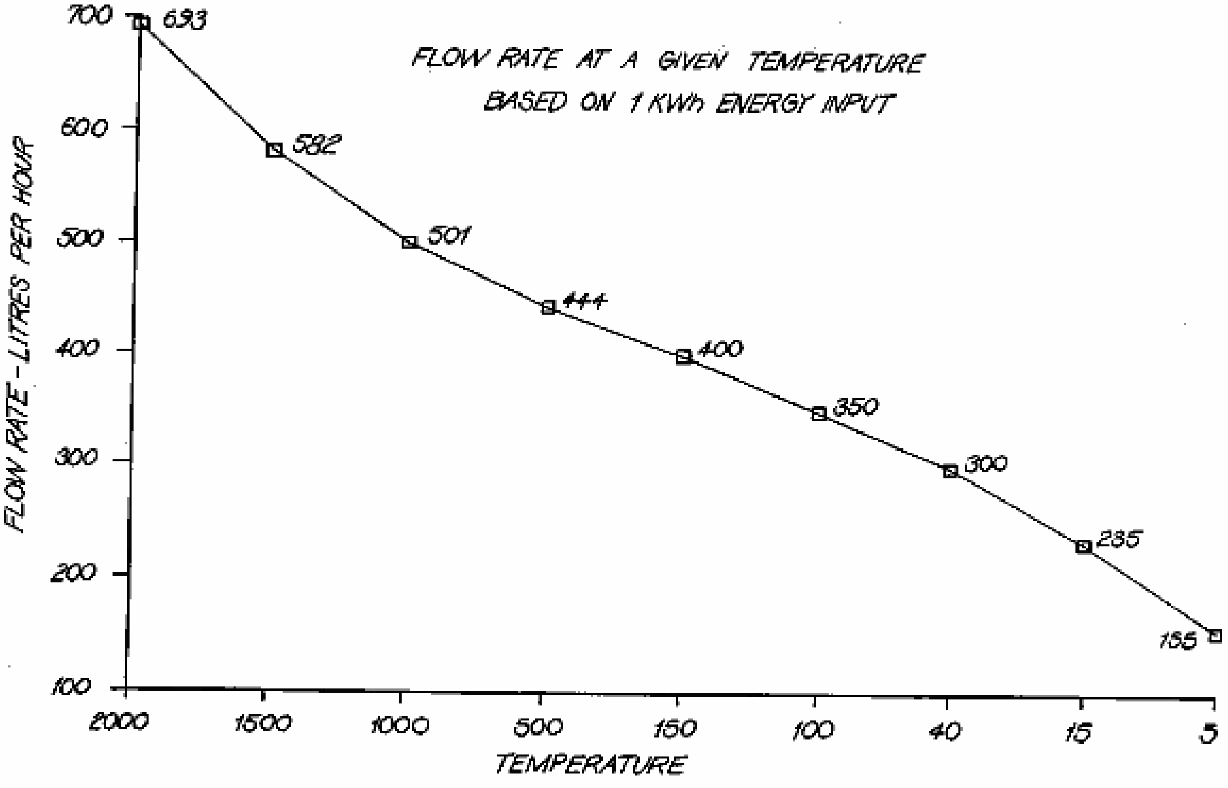

FIG. 16

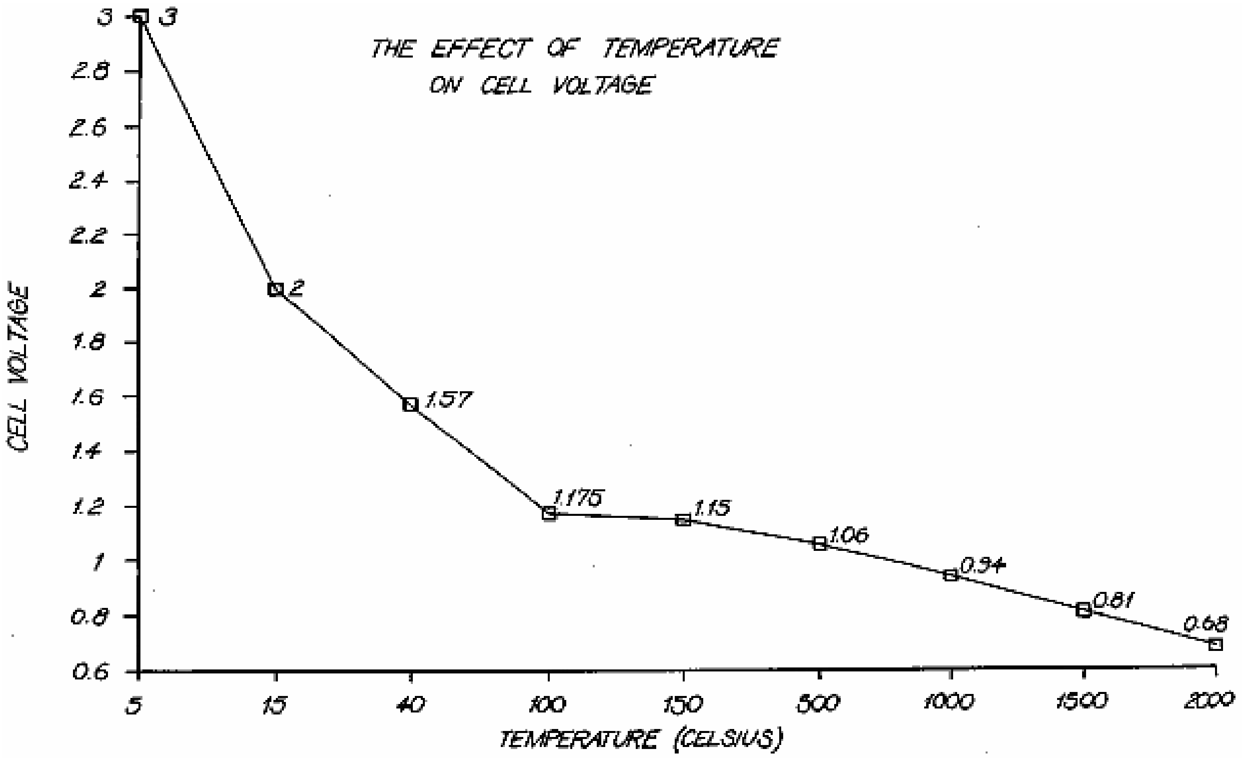
THE EFFECT OF TEMPERATURE
ON CELL VOLTAGE
CELL VOLTAGE
3
2.8
2.6
2.4
2.2
2
1.8
1.6
1.4
1.2
1
0.8
0.6
3
2
1.57
1.175
1.15
1.06
0.94
0.81
0.68
5
15
40
100
150
500
1000
1500
2000
TEMPERATURE (CELSIUS)

FIG. 17

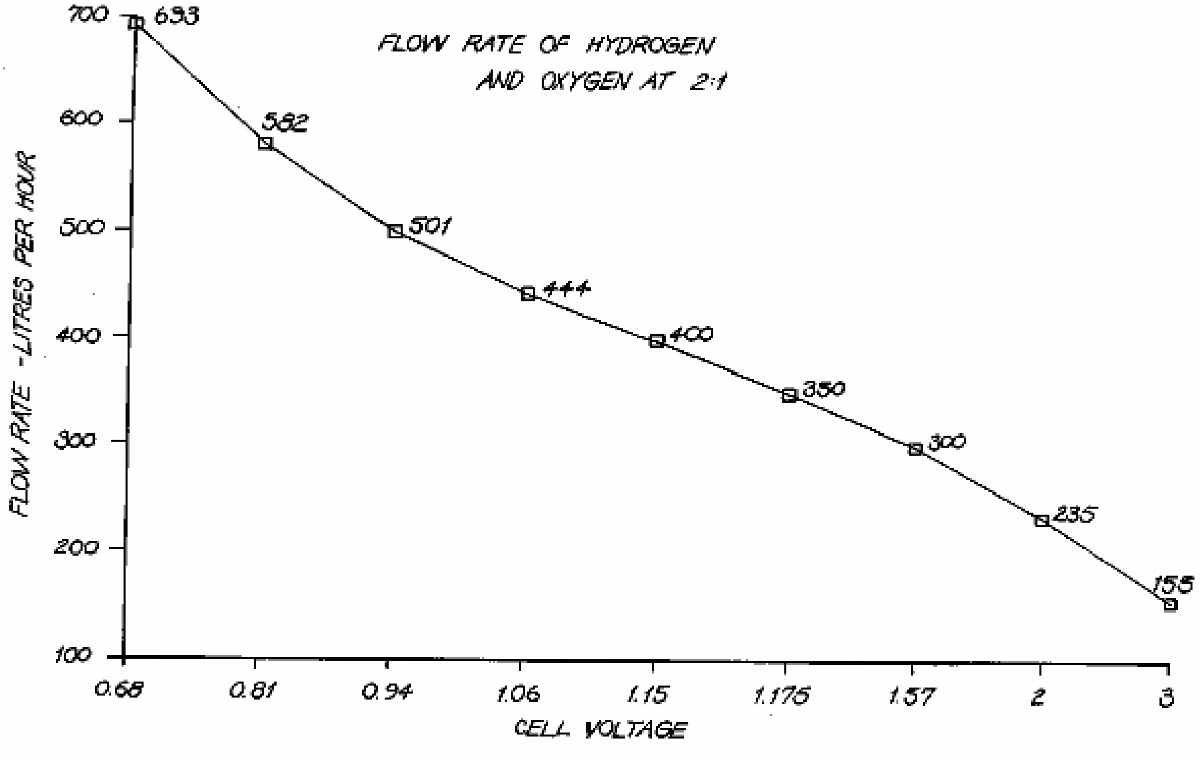
FLOW RATE OF HYDROGEN
AND OXYGEN AT 2:1
FLOW RATE - LITRES PER HOUR
700
600
500
400
300
200
100
693
582
501
444
400
350
300
235
155
0.68
0.81
0.94
1.06
1.15
1.175
1.57
2
3
CELL VOLTAGE

FIG. 18

TEST RUN	AMPS	VOLTS	TEMP C° (INITIAL)	TEMP C° (FINAL)	TIME (SECS.)	WATTS (A•V)	PRESSURE (psi)	FLOW RATE (lph)
1	47.2	38.5	40	-	-	1817.2	1 ATMOSPH.	-
2	54.3	34.4	-	70	222.13	1867.9	1 ATMOSPH.	89
3	65.2	34.4	40	70	26.37	2242.9	100 - 170	95
4	65.6	29.1	40	70	20.47	1909.0	300 - 410	97
5	62.9	29.4	40	70	22.93	1849.3	500 - 610	97
6	64.7	29.4	40	70	24.19	1902.2	700 - 850	98
7	63.9	29.2	40	70	24.13	1865.9	900 - 1050	98
8	64.0	29.3	40	70	22.87	1875.2	1100 - 1250	98
9	64.4	29.3	40	70	21.83	1886.9	1300 - 1450	98
10	63.7	29.1	40	70	23.34	1853.7	1500 - 1660	99
11	62.7	29.7	40	70	12.76	1862.2	1700 - 1890	100
12	61.9	29.9	40	70	11.17	1850.8	1900 - 1990	-
13	61.7	30.0	40	70	11.19	1851.0	2090 - 2170	-
14	60.7	30.6	40	70	15.71	1857.4	2230 - 2400	-
15	66.6	29.9	40	70	-	1991.3	2280 - 2420	-
16	61.7	30.0	45	70	-	1851.0	2270 - 2390	-
17	62.5	30.0	57	70	-	1875.0	2350 - 2380	-
18	62.0	30.1	59	70	-	1866.2	2350 - 2390	-
19	62.9	29.9	-	-	-	1880.7	2400 - 2420	-
20	63.0	29.4	-	-	-	1852.2	2430 - 2450	-

FIG. 19

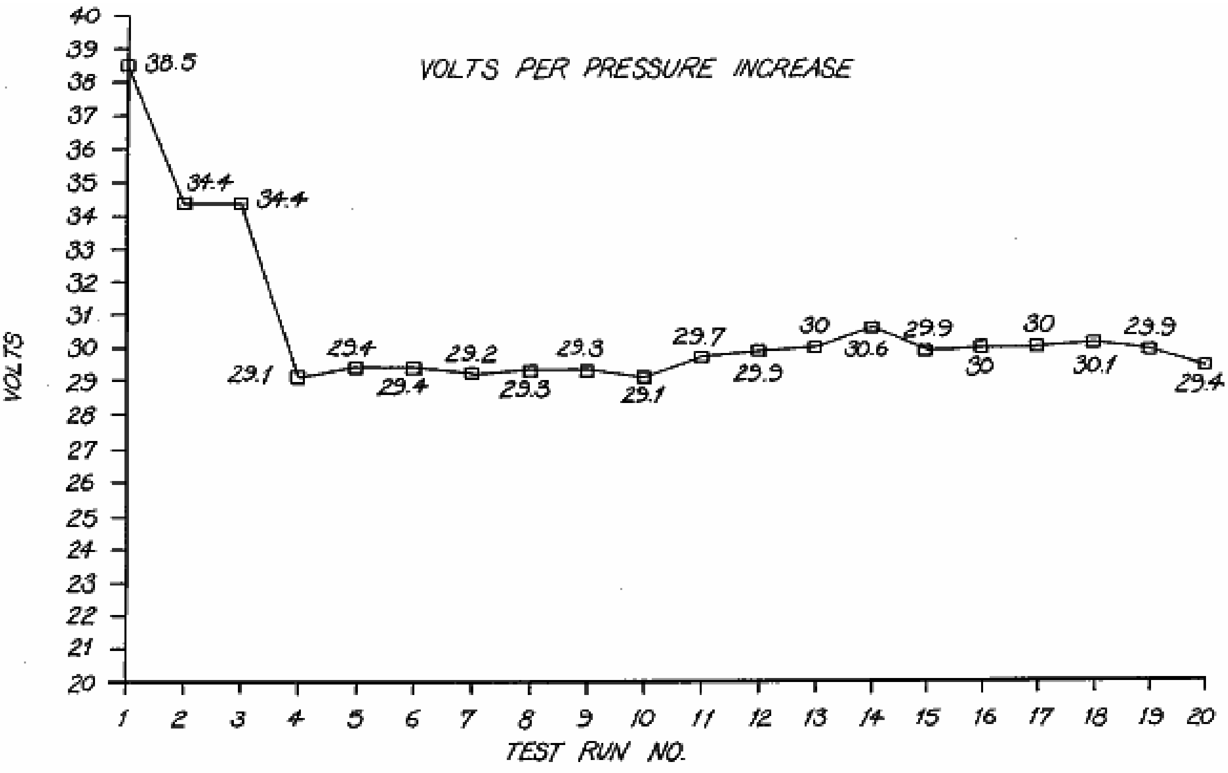

FIG. 20

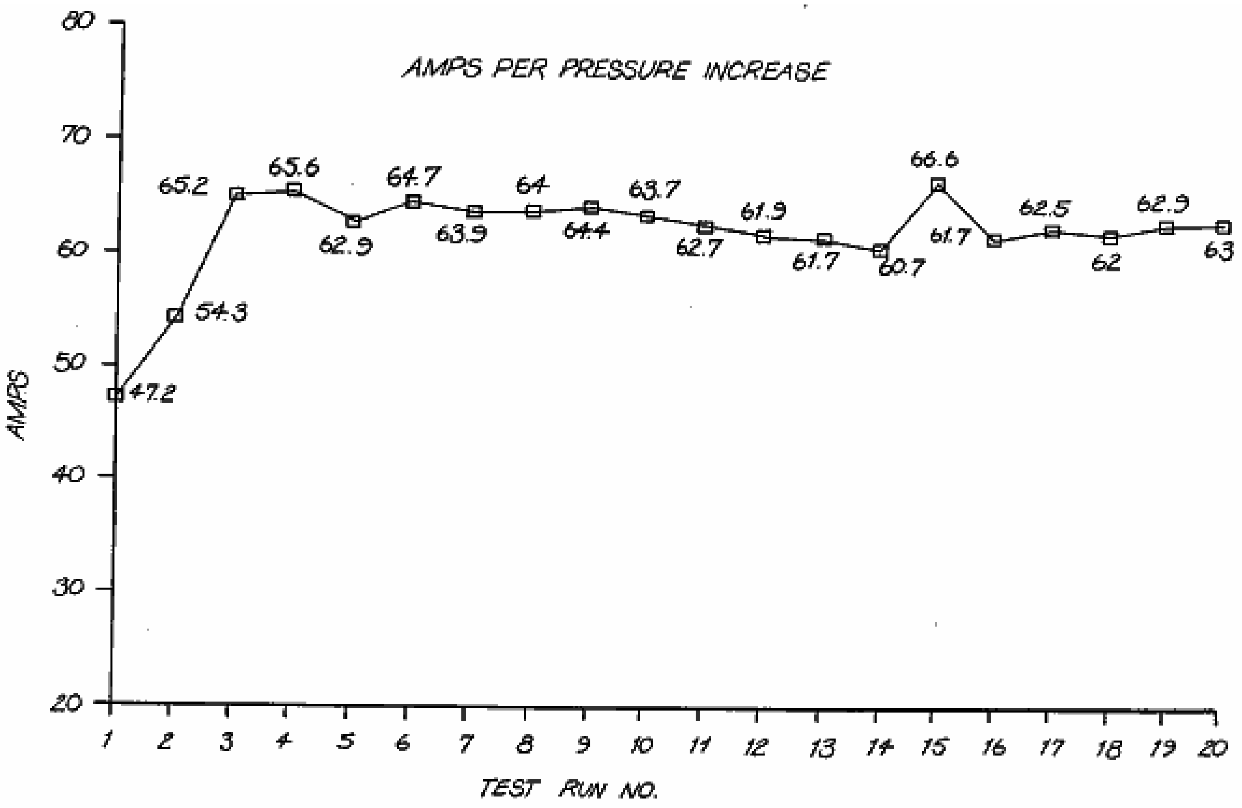
AMPS PER PRESSURE INCREASE
AMPS
80
70
60
50
40
30
20
47.2
54.3
65.2
65.6
62.9
64.7
63.9
64
64.4
63.7
62.7
61.9
61.7
60.7
66.6
61.7
62.5
62
62.9
63
1
2
3
4
5
6
7
8
9
10
11
12
13
14
15
16
17
18
19
20
TEST RUN NO.

FIG.21

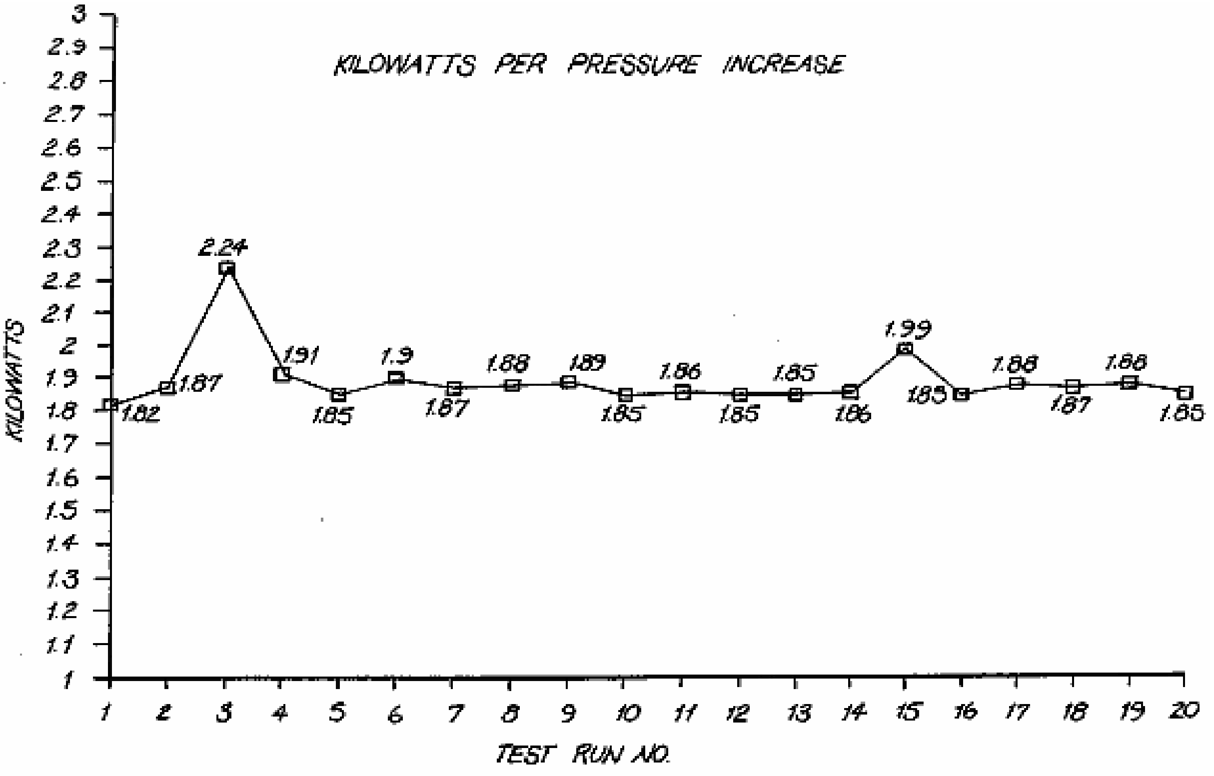
KILOWATTS PER PRESSURE INCREASE
KILOWATTS
3
2.9
2.8
2.7
2.6
2.5
2.4
2.3
2.2
2.1
2
1.9
1.8
1.7
1.6
1.5
1.4
1.3
1.2
1.1
1
1.82
1.87
2.24
1.91
1.85
1.9
1.87
1.88
1.89
1.85
1.86
1.85
1.85
1.86
1.99
1.85
1.88
1.87
1.88
1.85
1
2
3
4
5
6
7
8
9
10
11
12
13
14
15
16
17
18
19
20
TEST RUN NO.

FIG.22

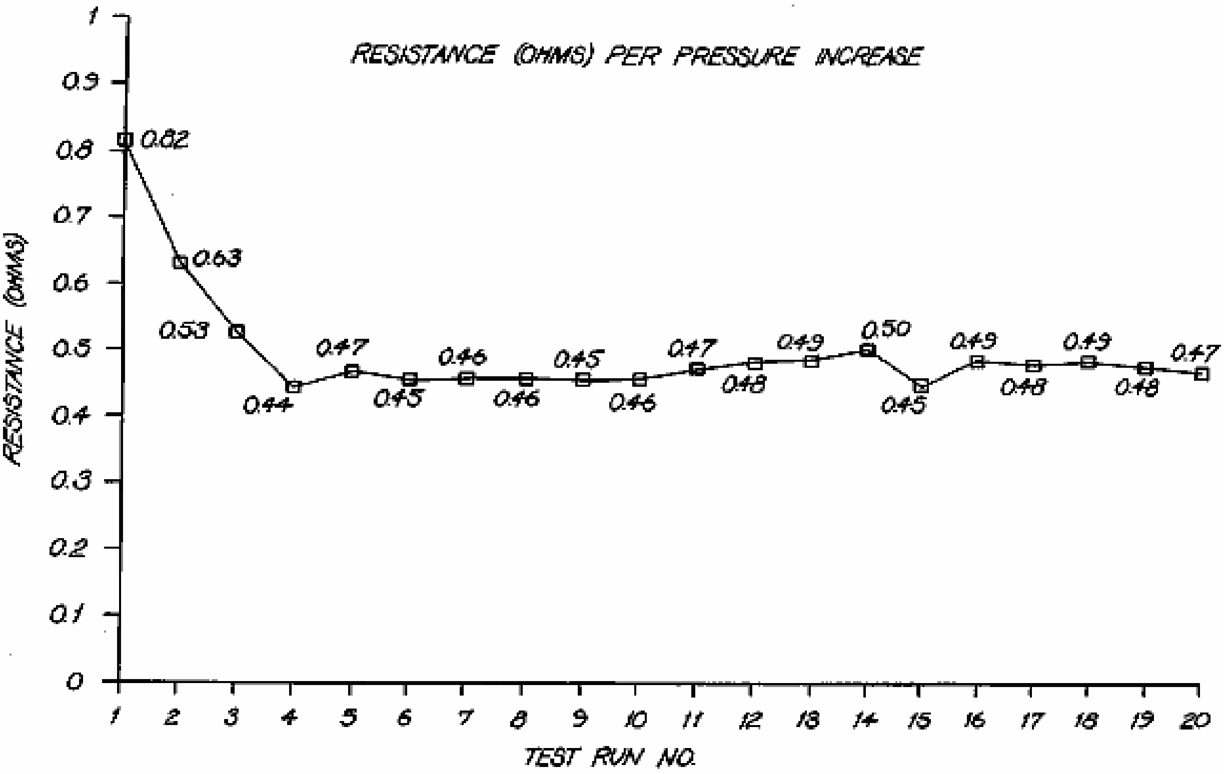
RESISTANCE (OHMS) PER PRESSURE INCREASE
RESISTANCE (OHMS)
1
0.9
0.8
0.7
0.6
0.5
0.4
0.3
0.2
0.1
0
0.82
0.63
0.53
0.44
0.47
0.45
0.46
0.46
0.45
0.46
0.47
0.48
0.49
0.50
0.45
0.49
0.48
0.49
0.48
0.47
1
2
3
4
5
6
7
8
9
10
11
12
13
14
15
16
17
18
19
20
TEST RUN NO.

FIG.23

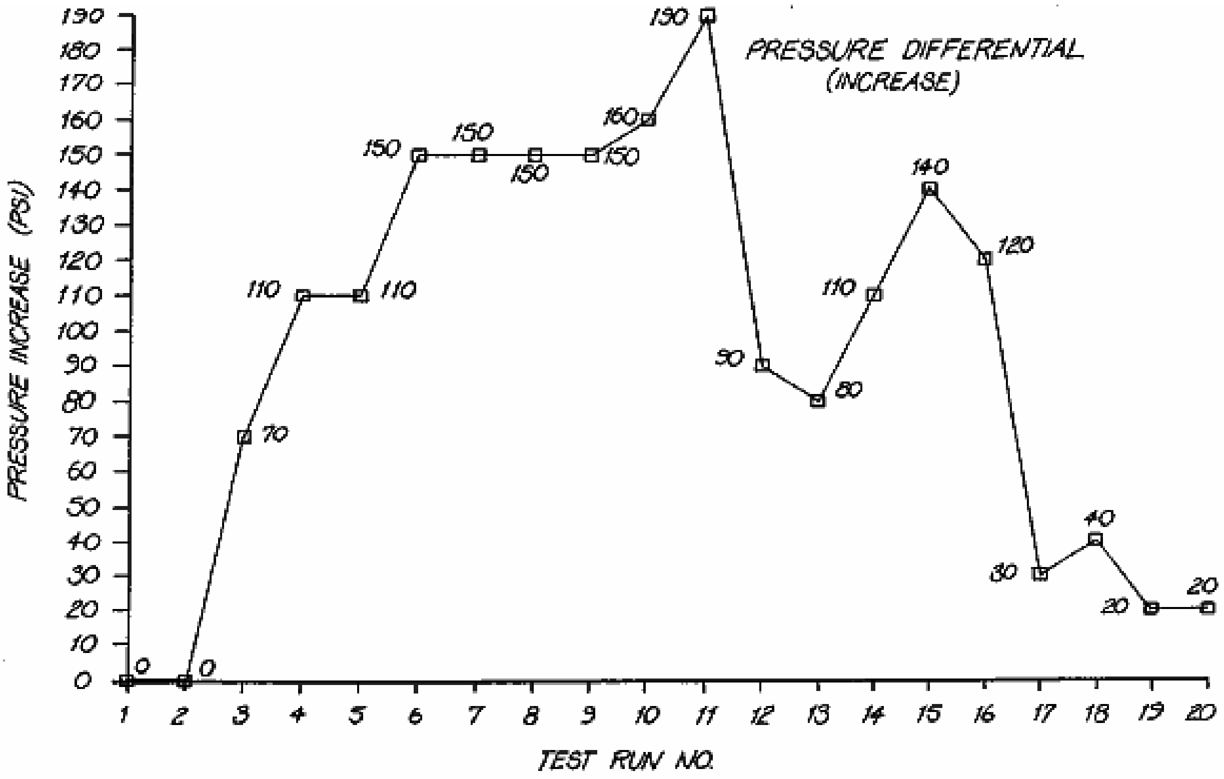
PRESSURE DIFFERENTIAL
(INCREASE)
PRESSURE INCREASE (PSI)
190
180
170
160
150
140
130
120
110
100
90
80
70
60
50
40
30
20
10
0
0
0
70
110
110
150
150
150
150
160
190
90
80
110
140
120
30
40
20
20
1
2
3
4
5
6
7
8
9
10
11
12
13
14
15
16
17
18
19
20
TEST RUN NO.

FIG.24

FLOW RATE ANALYSIS PER PRESSURE INCREASE

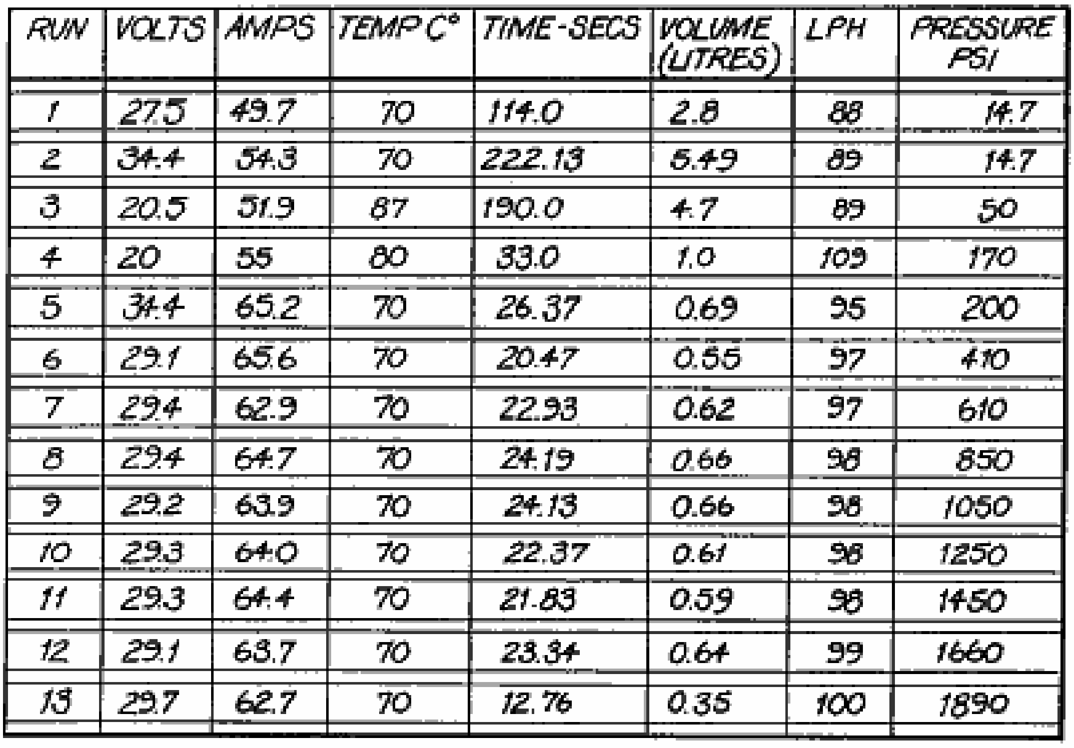

RUN	VOLTS	AMPS	TEMP C°	TIME-SECS	VOLUME (LITRES)	LPH	PRESSURE PSI
1	27.5	49.7	70	114.0	2.8	88	14.7
2	34.4	54.3	70	222.13	5.49	89	14.7
3	20.5	51.9	87	190.0	4.7	89	50
4	20	55	80	33.0	1.0	109	170
5	34.4	65.2	70	26.37	0.69	95	200
6	29.1	65.6	70	20.47	0.55	97	410
7	29.4	62.9	70	22.93	0.62	97	610
8	29.4	64.7	70	24.19	0.66	98	850
9	29.2	63.9	70	24.13	0.66	98	1050
10	29.3	64.0	70	22.37	0.61	98	1250
11	29.3	64.4	70	21.83	0.59	98	1450
12	29.1	63.7	70	23.34	0.64	99	1660
13	29.7	62.7	70	12.76	0.35	100	1890

FIG. 25

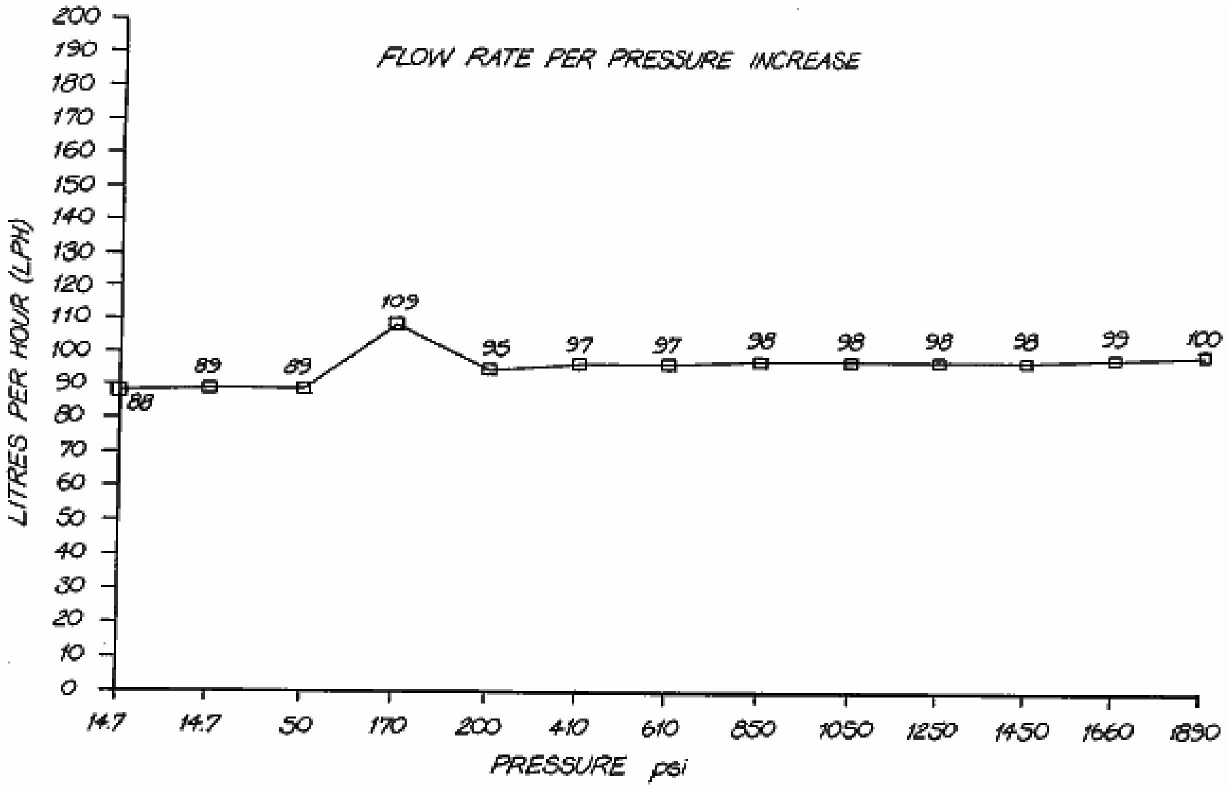

FIG. 26

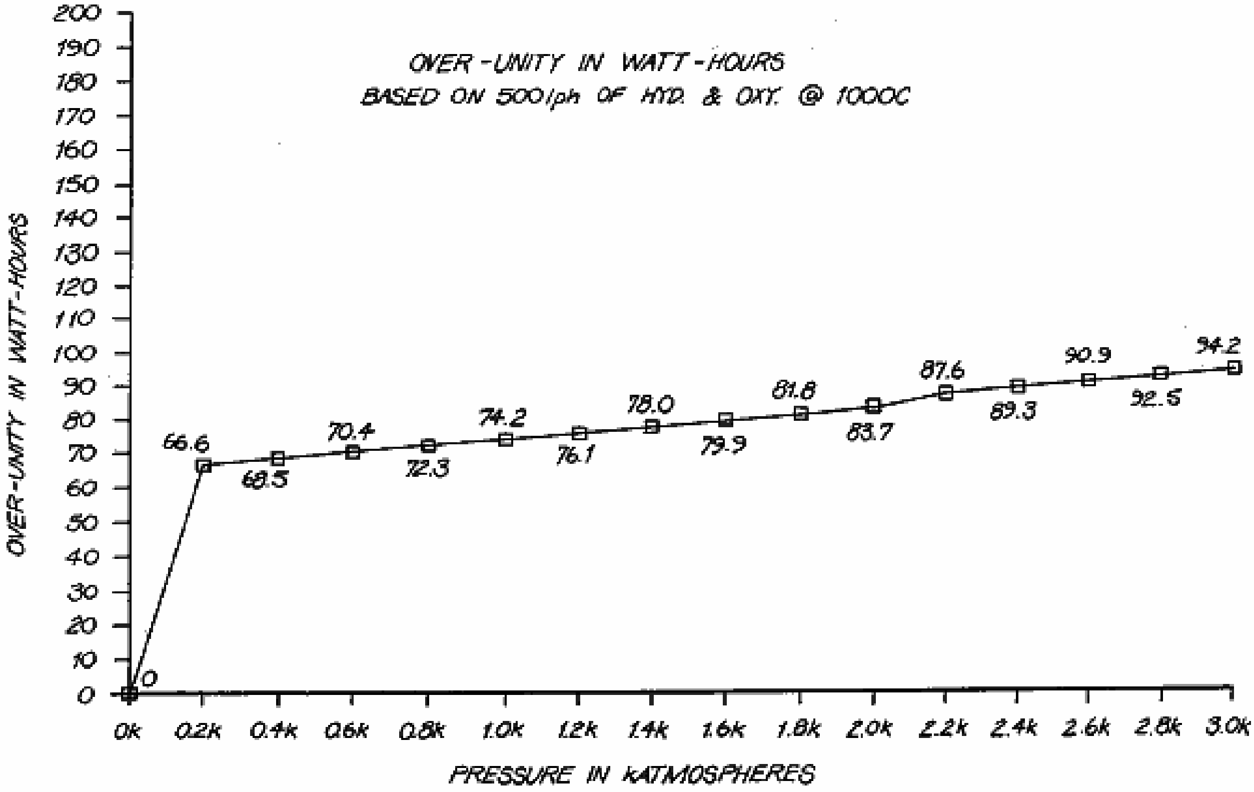
OVER-UNITY IN WATT-HOURS
BASED ON 500 lph OF HYD. & OXY. @ 1000C
OVER-UNITY IN WATT-HOURS
200
190
180
170
160
150
140
130
120
110
100
90
80
70
60
50
40
30
20
10
0
0
66.6
68.5
70.4
72.3
74.2
76.1
78.0
79.9
81.8
83.7
87.6
89.3
90.9
92.5
94.2
0k
0.2k
0.4k
0.6k
0.8k
1.0k
1.2k
1.4k
1.6k
1.8k
2.0k
2.2k
2.4k
2.6k
2.8k
3.0k
PRESSURE IN kATMOSPHERES

FIG.27

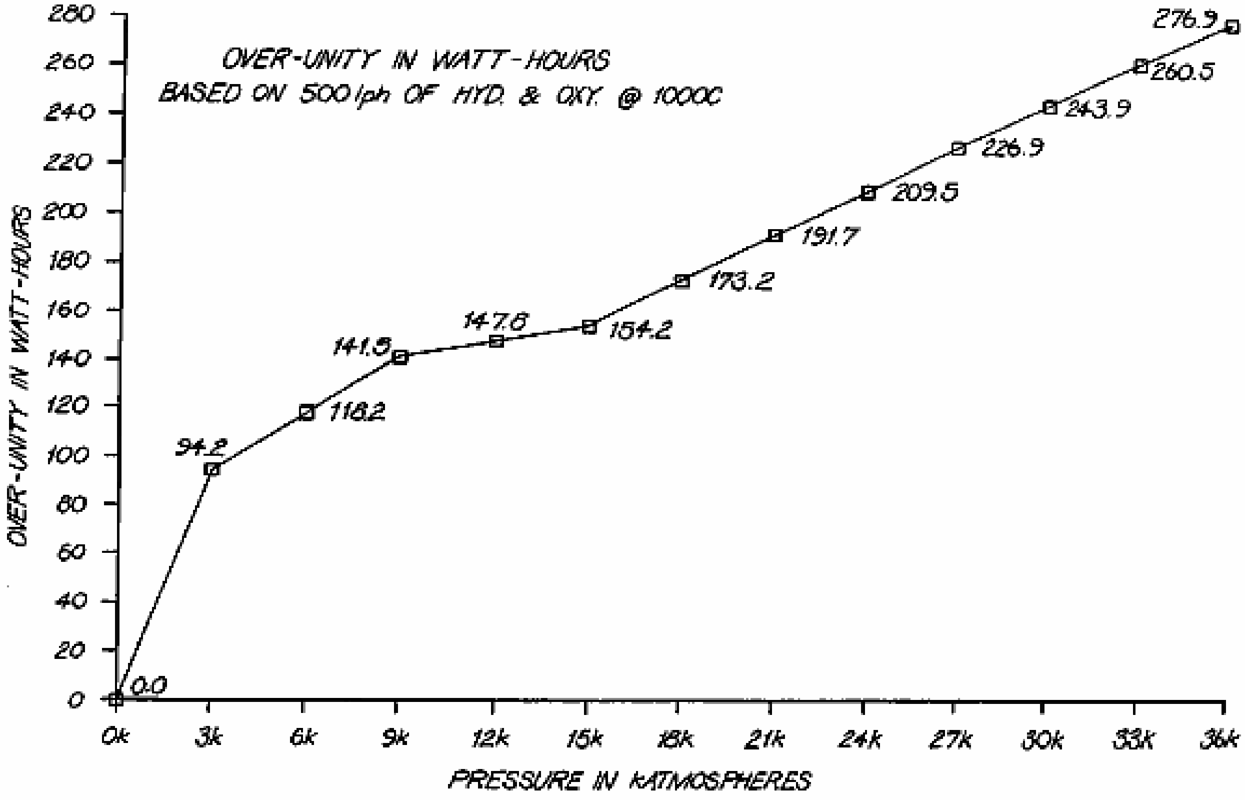
OVER-UNITY IN WATT-HOURS
BASED ON 500 lph OF HYD. & OXY. @ 1000C
OVER-UNITY IN WATT-HOURS
280
260
240
220
200
180
160
140
120
100
80
60
40
20
0
0.0
94.2
118.2
141.5
147.6
154.2
173.2
191.7
209.5
226.9
243.9
260.5
276.9
0k
3k
6k
9k
12k
15k
18k
21k
24k
27k
30k
33k
36k
PRESSURE IN kATMOSPHERES

FIG.28

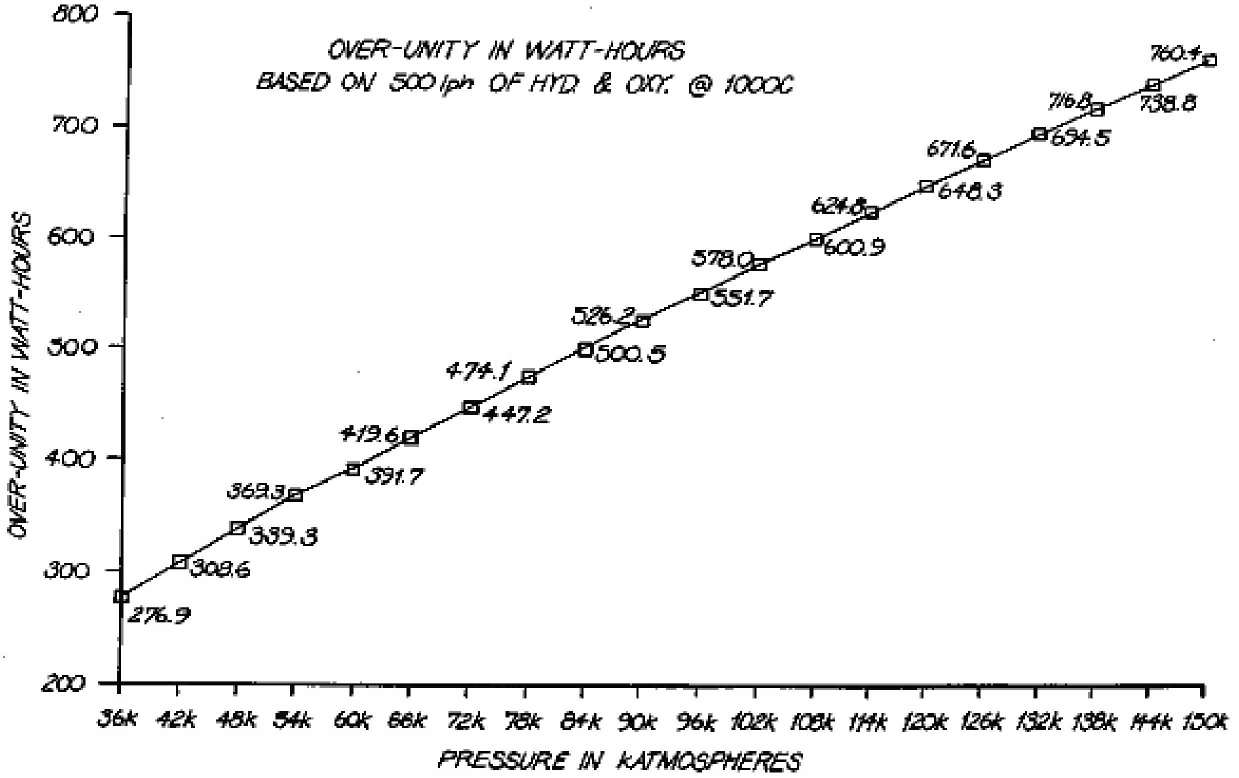

FIG. 29

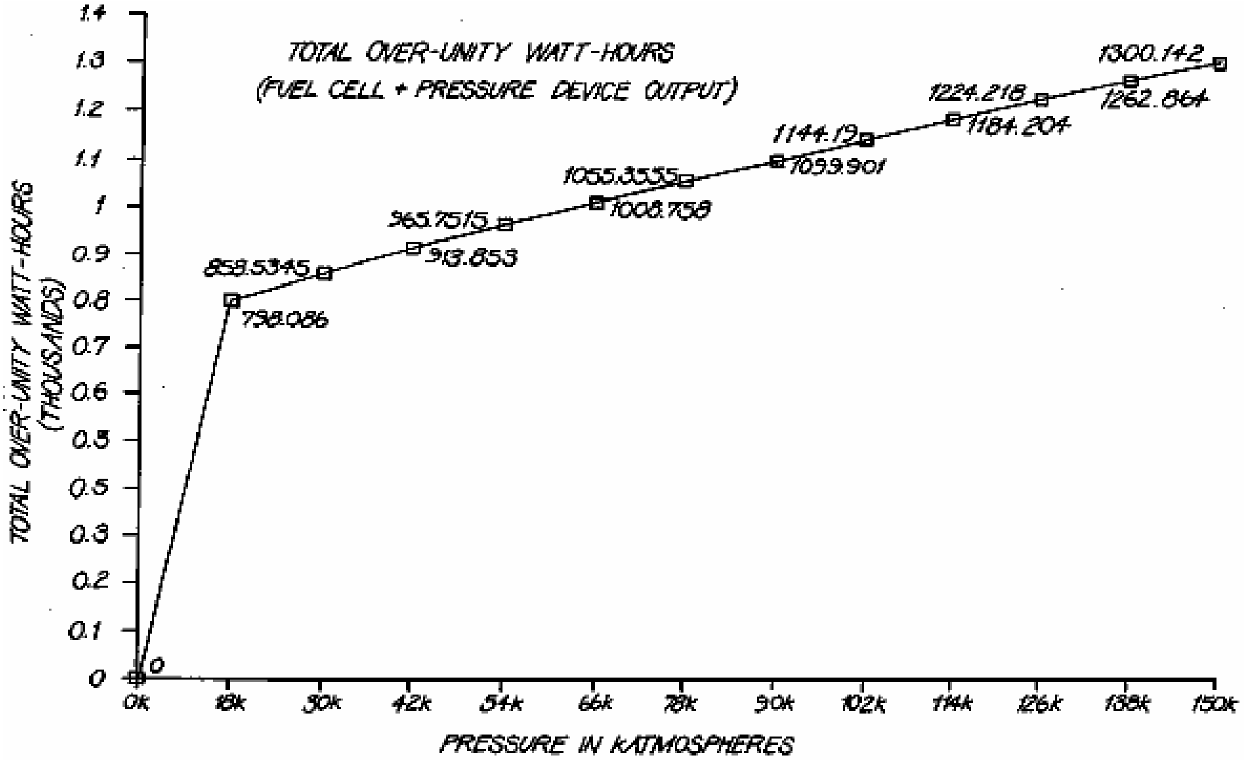

FIG. 30

Figs. 31a to 31e show a hydrogen/oxygen gas-driven internal combustion engine:

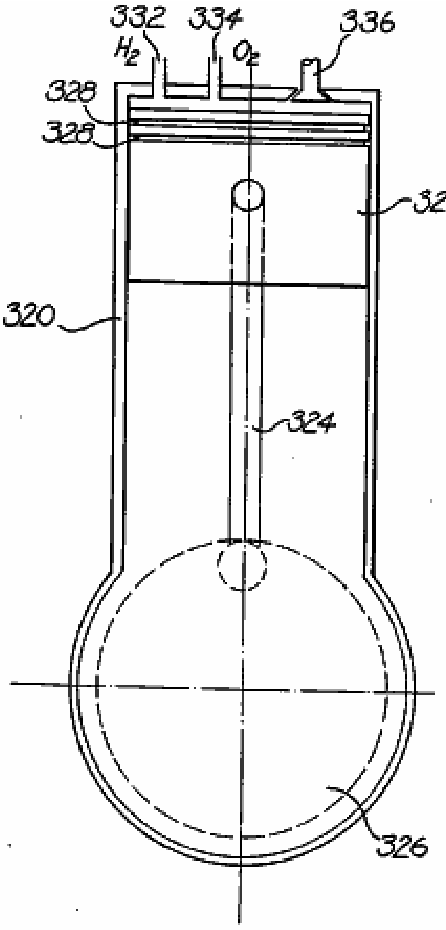

FIG. 31a

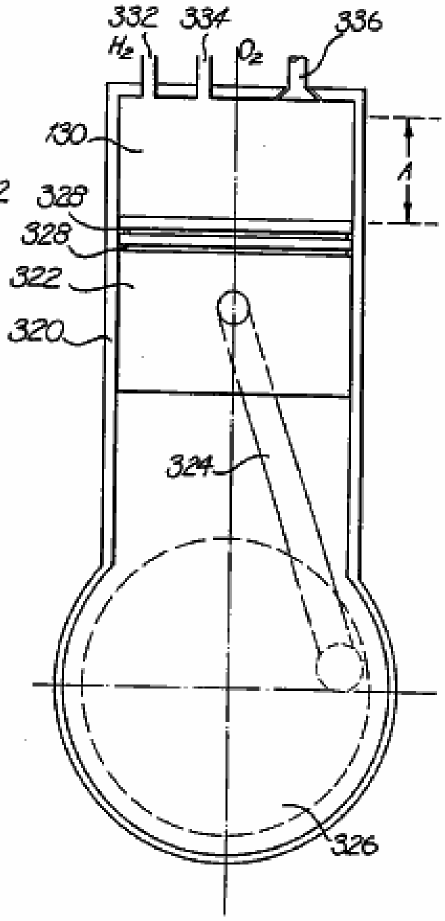

FIG. 31b

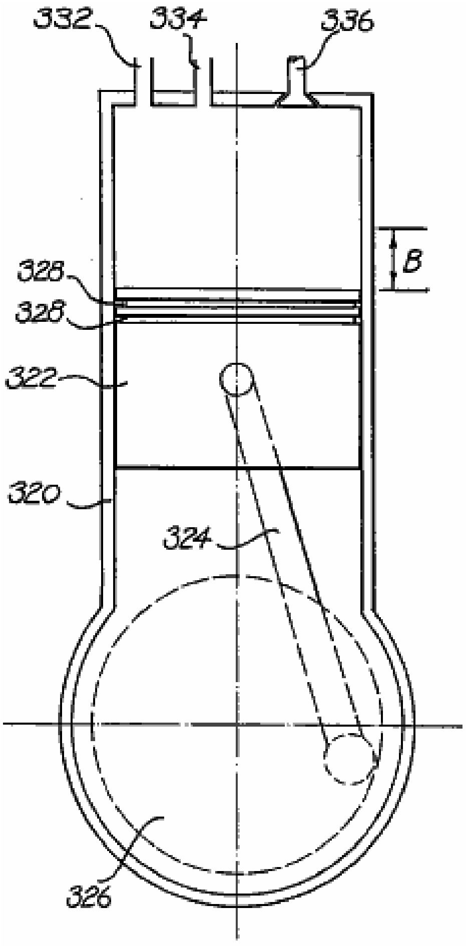

FIG. 31c

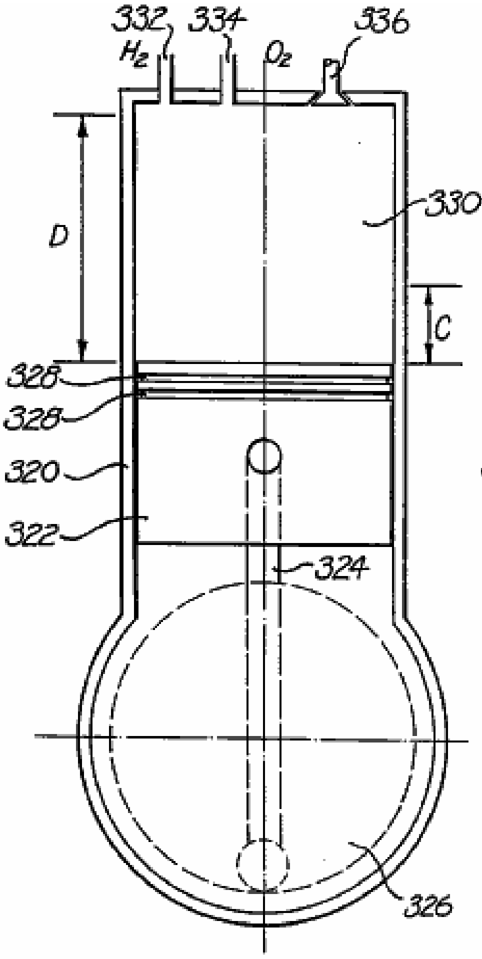

FIG. 31d

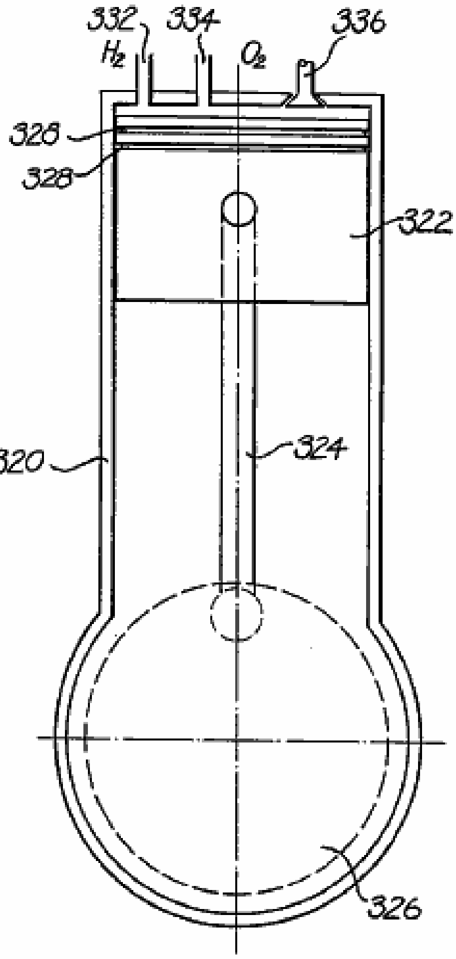

FIG. 31e

Figs. 32a-32c show a gas-driven implosion pump:

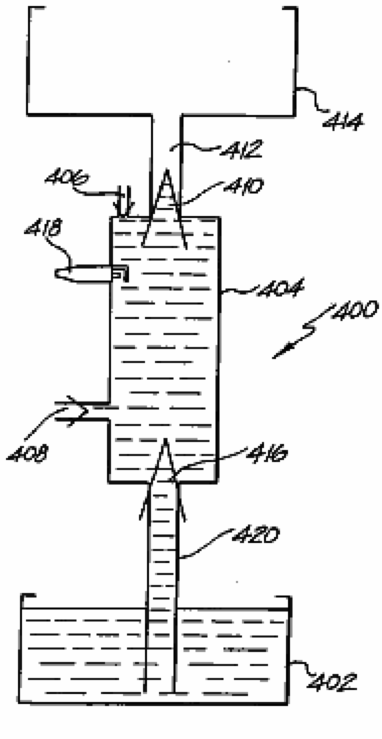

FIG. 32a

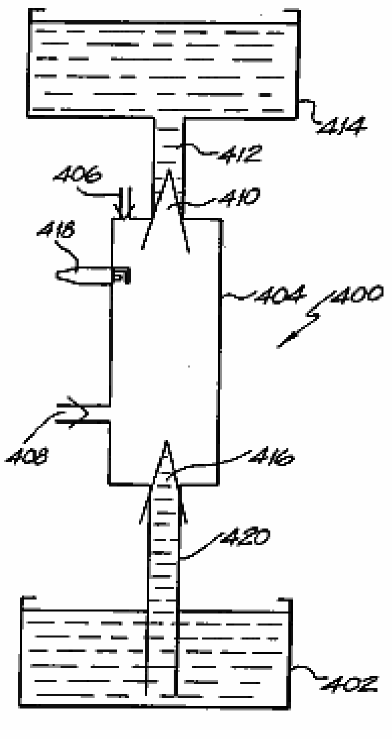

FIG. 32b

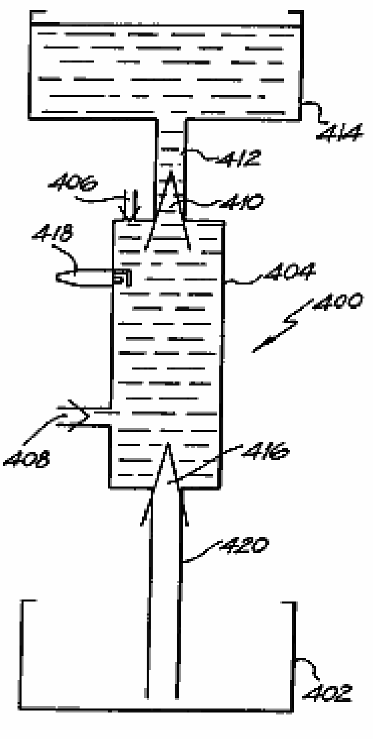

FIG. 32c

DETAILED DESCRIPTION AND BEST MODE OF PERFORMANCE

Fig.IA and **Fig.2A** show embodiments of a first and second type of cell plate **90, 98** as an end view. **Fig.1B** and **Fig.2B** are partial cross-sectional views along the respective mid-lines as shown. Common reference numerals have been used where appropriate. The plates **90, 98** can have the function of either an anode (+) or a cathode (-), as will become apparent. Each comprises an electrode disc **92** which is perforated with hexagonally shaped holes **96**. The disc **92** is made from steel or resin-bonded carbon or conductive polymer material. The disc **92** is housed in a circular rim or sleeve **94**. The function of the perforations **96** is to maximise the surface area of the electrode disc **92** and minimise the weight over solid constructions by 45%.

By way of example, for a disc of diameter 280 mm, the thickness of the disc must be 1 mm in order to allow the current density (which ranges from 90 A / 2,650 cm2 - 100 A / 2,940 cm2 of the anode or cathode) to be optimal. If the diameter of the plate is increased, which consequently increases the surface area, it is necessary to increase the thickness of the plate in order to maintain uniformity of conductance for the desired current density.

The hexagonal perforations in a 1 mm disc have a distance of 2 mm between the flats, twice the thickness of the plate in order to maintain the same total surface area prior to perforation, and be 1 mm away from the next adjacent perforation to allow the current density to be optimal. A (flat-to-flat) distance of 1 mm between the hexagonal perforations is required, because a smaller distance will result in thermal losses and a larger distance will add to the overall weight of the plate.

The sleeve **94** is constructed of PVC material and incorporates a number of equally spaced shaft holes **100,102**. The holes are for the passage of interconnecting shafts provided in a stacked arrangement of the plates **90, 98** forming the common conductor for the respective anode and cathode plates. The further two upper holes **104,106** each support a conduit respectively for the out-flow of oxygen and hydrogen gases. The further holes **108,110** at the bottom of the sleeve **94** are provided for the inlet of water and electrolyte to the respective cell plates **90, 98**.

Fig.3 shows an enlarged view of a portion of the cell plate **90** shown in **Fig.IA**. The port hole **104** is connected to the hexagonal perforations **96** within the sleeve **94** by an internal channel **112**. A similar arrangement is in place for the other port hole **106**, and for the water/electrolyte supply holes **108, 110**.

If it is the case that the hydrogen and oxygen gases liberated are to be kept separate (i.e. not to be formed as an admixture), then it is necessary to separate those gases as they are produced. In the prior art this is achieved by use of diaphragms which block the passage of gases and effectively isolate the water/electrolyte on each side of the diaphragm. Ionic transfer thus is facilitated by the conductive nature of the diaphragm material (i.e. a water - diaphragm - water path). This results in an increase in the ionic resistance and hence a reduction in efficiency.

Fig.4 shows an exploded stacked arrangement of four cell plates, being an alternative stacking of two (anode) cell plates **90** and two (cathode) cell plates **98**. The two ends of the stacked arrangement of cell plates delineates a single cell unit **125**.

Interposed between each adjacent cell plate **90, 98** is a PTFE separation **116**. Although not shown in **Fig.4**, the cell unit includes separate hydrogen and oxygen gas conduits that respectively pass through the stacked arrangement of cell plates via the port holes **106, 104** respectively. In a similar way, conduits are provided for the supply of water/electrolyte, respectively passing through the holes **108, 110** at the bottom of the respective plates **90, 98**. Only two pairs of anode/cathode cell plates are shown. The number of such plates can be greatly increased per cell unit **125**.

Also not shown are the interconnecting conductive shafts that electrically interconnect alternative common cell plates. The reason for having a large diameter hole in one cell plate adjacent to a smaller diameter hole in the next cell plate, is so that an interconnecting shaft will pass through the larger diameter hole, and not make an electrical connection (i.e. insulated with PVC tubing) rather only forming an electrical connection between alternate (common) cell plates.

Fig.4 is an exploded view of one cell unit **125** arrangement. When fully constructed, all the elements are stacked in intimate contact. Mechanical fastening is achieved by use of one of two adhesives such as (a) "PUR-FECT LOK" (TM) 34-9002, which is a Urethane Reactive Hot Melt adhesive with a main ingredient of Methylene Bispheny/Dirsocynate (MDI), and (b) "MY-T-BOND" (TM) which is a PVC solvent based adhesive. Both adhesives are Sodium Hydroxide resistant, which is necessary because the electrolyte contains 20% Sodium Hydroxide. In that case the water/electrolyte only resides within the area contained within the cell plate sleeve **94**. Thus the only path for the inlet of water/electrolyte is by bottom channels **118, 122** and the only outlet for the gases is by the top channels **112, 120**. In a system constructed and tested by the inventor, the thickness of the cell plates **90, 98** is 1 mm (2 mm on the rim because of the PVC sleeve **94**), with a diameter of 336 mm. The cell unit **125** is segmented from the next cell by an insulating PVC segmentation disc **114**. A segmentation disc **114** is also placed at the beginning and end of the entire cell bank. If there is to be no separation of the liberated gases, then the PTFE membranes **116** are omitted and sleeve **94** is not required.

The PTFE membrane **116** is fibrous and has 0.2 to 1.0 micron interstices. A suitable type is type Catalogue Code J, supplied by Tokyo Roshi International Inc (Advantec). The water/electrolyte fills the interstices and ionic current flows only via the water - there is no contribution of ionic flow through the PTFE material itself. This leads to a reduction in the resistance to ionic flow. The PTFE material also has a 'bubble point' that is a function of pressure, hence by controlling the relative pressures at either side of the PTFE separation sheets, the gases can be 'forced' through the interstices to form an admixture, or otherwise kept separate. Other advantages of this arrangement include a lesser cost of construction, improved operational efficiency and greater resistance to faults.

Fig.5A is a stylised, and exploded, schematic view of a linear array of three series-connected cell units **125**. For clarity, only six interconnecting shafts **126-131** are shown. The shafts **126-131** pass through the respective shaft holes **102,100** in the various cell plates **90,98** in the stacked arrangement. The polarity attached to each of the exposed end shafts, to which the DC supply is connected also is indicated. The shafts **126-131** do not run the full length of the three cell banks **125**. The representation is similar to the arrangement shown in **Fig.7A** and **Fig.8**. One third the full DC source voltage appears across each anode/cathode cell plate pair **90,98**.

Further, the gas conduits **132,133**, respectively for hydrogen and oxygen, that pass through the port holes **104,106** in the cell plates **90,98** also are shown. In a similar way, water/electrolyte conduits **134,135**, passing through the water port holes **108,110** in the cell plates also are shown.

Fig.5B particularly shows how the relative potential difference in the middle cell bank **125** changes. That is, the plate electrode **90a** now functions as a cathode (i.e. relatively more negative) to generate hydrogen, and the plate electrode **98a** now functions as an anode (i.e. relatively more positive) to generate oxygen. This is the case for every alternate cell unit. The arrowheads shown in **Fig.5B** indicate the electron and ionic current circuit. **Fig.5C** is an electrical equivalent circuit representation of **Fig.5B**, where the resistive elements represent the ionic resistance between adjacent anode/cathode plates. Thus it can be seen that the cell units are connected in series.

Because of the change of function of the cell plates **90a** and **98a**, the complementary gases are liberated at each, hence the respective channels **112** are connected to the opposite gas conduit **132,133**. Practically, this can be achieved by the simple reversal of the cell plates **90,98**.

Fig.6 shows the three cell units **125** of **Fig.5A** connected to a gas collection arrangement. The cell units **125** are located within a tank **140** which is filled with water/electrolyte to the indicated level **h**. The water is consumed as the electrolysis process proceeds, and replenishing supply is provided via the inlet **152**. The water/electrolyte level **h** can be viewed via the sight glass **154**. In normal operation, the different streams of hydrogen and oxygen are produced and passed from the cell units **125** to respective rising columns **142,144**. That is, the pressure of electrolyte on opposed sides of the PTFE membranes **116** is equalised, thus the gases cannot admix.

The columns **142,144** also are filled with the water/electrolyte, and as it is consumed at the electrode plates, replenishing supply of electrolyte is provided by way of circulation through the water/electrolyte conduits **134,135**. The circulation is caused by entrainment by the liberated gases, and by the circulatory inducing nature of the conduits and columns.

The upper extent of the tank **140** forms two scrubbing towers **156,158**, respectively for the collection of oxygen and hydrogen gases. The gases pass up a respective column **142,144**, and out from the columns via openings therein at a point within the interleaved baffles **146**. The point where the gases exit the columns **142,144** is beneath the water level **h**, which serves to settle any turbulent flow and entrained electrolyte. The baffles **146** located above the level **h** scrub the gas of any entrained electrolyte, and the scrubbed gas then exits by respective gas outlet columns **148,150** and so to a gas receiver. The level **h** within the tank **140** can be regulated by any convenient means, including a float switch, again with the replenishing water being supplied by the inlet pipe **152**.

The liberated gases will always separate from the water/electrolyte solution by virtue of the difference in densities. Because of the relative height of the respective set of baffles, and due to the density differential between the gases and the water/electrolyte, it is not possible for the liberated hydrogen and oxygen gases to mix. The presence of the full volume of water within the tank **140** maintains the cell plates in an immersed state, and further serves to absorb the shock of any internal detonations should they occur.

In the event that a gas admixture is required, then firstly the two flow valves **136,137** respectively located in the oxygen gas outlet conduit **132** and water/electrolyte inlet port **134** are closed. This blocks the outlet path for the oxygen gas and forces the inlet water/electrolyte to pass to the inlet conduit **134** via a one-way check valve **139** and pump **138**. The water/electrolyte within the tank **140** is under pressure by virtue of its depth (volume), and the pump **138** operates to increase the pressure of water/electrolyte occurring about the anode cell plates **90,98a** to be at an increased pressure with respect to the water/electrolyte on the other side of the membrane **116**.

This pressure differential is sufficient to cause the oxygen gas to migrate through the membrane, thus admixed oxygen and hydrogen are liberated via the gas output conduit **133** and column **144**. Since there is no return path for the water/electrolyte supplied by the pump **138**, the pressure about the cell plates **90,98a** will increase further, and to a point where the difference is sufficient such that the water/electrolyte also can pass through the membrane **116**. Typically, pressure differential in the range of 1.5 - 10 psi is required to allow passage of gas, and a pressure differential in the range of 10 - 40 psi for water/electrolyte.

While only three cell units **125** are shown, clearly any number, connected in series, can be implemented.

Embodiments of the present invention now will be described. Where applicable, like reference numerals have been used.

Fig.7A and **Fig.7B** show a first type of cell plate **190** respectively as an end view and as an enlarged cross-sectional view along line **VIIb-VIIb**. The cell plate **190** differs from the previous cell plate **90** shown in **Fig.1A** and **Fig.1B** in a number of important aspects. The region of the electrode disc **192** received within the sleeve **194** now is perforated. The function of these perforations is to further reduce the weight of the cell plate **190**. The shaft holes **200,202** again pass through the electrode disc **192**, but so too do the upper holes **204,206** through which the conduits for the out-flow of liberated hydrogen and oxygen gases pass. The bottom holes **208,210**, provided for the inlet of water and electrolyte, now also are located in the region of the sleeve **194** coincident with the perforated edge margin of the electrode disc **192**. The channels **212,218** respectively communicating with the port hole **204** and the supply hole **210** also are shown.

Fig.8A and **Fig.8B** show a second type of cell plate **198** as a companion to the first cell plate **190**, and as the same respective views. The second cell plate **198** is somewhat similar to the cell plate **98** previously shown in **Fig.2A** and **Fig.2B**. The differences between them are the same as the respective differences between the cell plate shown in **Fig.1A** and **Fig.1B** and the one shown in **Fig.7A** and **Fig.7B**. The arrangement of the respective channels **220,222** with respect to the port **206** and the water supply hole **208** also are shown.

In the fabrication of the cell plates **190,198**, the sleeve **94** is injection moulded from PVC plastics material formed about the edge margin of the electrode disc **192**.

The injection moulding process results in the advantageous forming of interconnecting sprues forming within the perforations **196** in the region of the disc **192** held within the sleeve **194**, thus firmly anchoring the sleeve **194** to the disc **192**.

Fig.9 is a view similar to **Fig.3**, but for the modified porting arrangement and perforations (shown in phantom where covered by the sleeve) of the region of the disc **192** within and immediately outside of the sleeve **194**.

Fig.10 shows a cell unit **225** in the form of an exploded alternating stacking of first and second cell plates **190,198**, much in the same manner as **Fig.4**. Only two pairs of anode/cathode cell plates are shown, however the number of such plates can be greatly increased per cell unit **225**. The membrane **216** preferably is type QR-HE silica fibre with the alternative being PTFE. Both are available from Tokyo Roshi International Inc. (Advantec) of Japan. Type QR-HE is a hydrophobic material having 0.2 to 1.0 micron interstices, and is capable of operation at temperatures up to 1,000^{0}C. The cell unit **225** can be combined with other such cell units **225** to form an interconnected cell bank in the same manner as shown in **Fig.5A**, **Fig.5B** and **Fig.5C**.

Furthermore, the cell units can be put to use in a gas collection arrangement such as that shown in **Fig.6**. Operation of the gas separation system utilising the new cell plates **190,198** is in the same manner as previously described.

Fig.11 is an enlarged cross-sectional view of three cell plates in the vicinity of the oxygen port **204**. The cell plates comprise two of the first type of plate **190** shown in **Fig.7A** constituting a positive plate, and a single one of the second type of plate **198** shown in **Fig.8A** representing a negative plate. The location of the respective channels **212** for each of the positive cell plates **190** is shown as a dashed representation. The respective sleeves **194** of the three cell plates are formed from moulded PVC plastics as previously described, and in the region that forms the perimeter of the port **204** have a configuration particular to whether a cell plate is positive or negative. In the present case, the positive cell plates **190** have a flanged foot **230** that, in the assembled construction, form the contiguous boundary of the gas port **204**. Each foot **230** has two circumferential ribs **232** which engage corresponding circumferential grooves **234** in the sleeve **194** of the negative plate **198**.

The result of this arrangement is that the exposed metal area of the negative cell plates **198** always are insulated from the flow of oxygen gas liberated from the positive cell plates **190**, thus avoiding the possibility of spontaneous explosion by the mixing of the separated hydrogen and oxygen gases. This arrangement also overcomes the unwanted production of either oxygen gas or hydrogen gas in the gas port.

For the case of the gas port **206** carrying the hydrogen gas, the relative arrangement of the cell plates is reversed such that a flanged footing now is formed on the sleeve **194** of the other type of cell plate **198**. This represents the converse arrangement to that shown in **Fig.11**.

Fig.12A and **Fig.12B** show perspective side views of adjacent cell plates, with **Fig.12A** representing a positive cell plate **190** and **Fig.12B** representing a negative cell plate **198**. The gas port **206** thus formed is to carry hydrogen gas. The mating relationship between the flanged foot **230** and the end margin of the sleeve **194** of the positive cell plate **192** can be seen, particularly the interaction between the ribs **232** and the grooves **234**.

Fig.13 is a cross-sectional view of four cell plates formed into a stacked arrangement delimited by two segmentation plates **240**, together forming a cell unit **242**. Thus there are two positive cell plates **190** and two negative cell plates **198** in alternating arrangement. The cross-section is taken in the vicinity of a shaft hole **202** through which a negative conductive shaft **244** passes. The shaft **244** therefore is in intimate contact with the electrode discs **192** of the negative cell plates **198**. The electrodes discs **192** of the positive cell plates **190** do not extend to contact the shaft **244.** The sleeve **194** of the alternating negative cell plates **198** again have a form of flanged foot **246**, although in this case the complementarily shaped ribs and grooves are formed only on the sleeve of the negative cell plates **198**, and not on the sleeve **194** of the positive cell plates **190**. The segmentation plates **240** serve to delimit the stacked plates forming a single cell unit **242**, with ones of the cell units **242** being stacked in a linear array to form a cell bank such as has been shown in **Fig.5A**.

A threaded shaft nut **250** acts as a spacer between adjacent electrodes connecting with the shaft **244**. **Fig.14** is a perspective view of the shaft nut **250** showing the thread **252** and three recesses **254** for fastening nuts, screws or the like.

In all of **Figs.11 to 13**, the separation membrane material **216** is not shown, but is located in the spaces **248** between adjacent cell plates **190,198**, extending to the margins of the electrode disks **192** in the vicinity of the gas ports **204,206** or the shaft holes **200,202**.

An electrolysis hydrogen and oxygen gas system incorporating a gas separation system, such as has been described above, can therefore be operated to establish respective high pressure stores of gas. That is, the separated hydrogen and oxygen gases liberated by the electrolysis process are stored in separate gas receivers or pressure vessels. The pressure in each will increase with the continuing inflow of gas.

Fig.15 shows an idealised electrolysis system, comprising an electrolysis cell **150** that receives a supply of water to be consumed. The electrolysis process is driven by a DC potential (**Es**) **152**. The potential difference applied to the cell **150** therefore must be sufficient to electrolyse the water into hydrogen and oxygen gas dependent upon, inter alia, the water pressure **PC** and the back pressure of gas **PB** acting on the surface of the water, together with the water temperature **Tc**. The separate liberated hydrogen and oxygen gases, by a priming function, are pressurised to a high value by storage in respective pressure vessels **158,160**, being carried by gas lines **154,156**.

The pressurised store of gases then are passed to an energy conversion device that converts the flow of gas under pressure to mechanical energy (e.g. a pressure drop device **162**). This mechanical energy recovered **WM** is available to be utilised to provide useful work. The mechanical energy **WM** also can be converted into electrical form, again to be available for use.

The resultant exhausted gases are passed via lines **164,166** to a combustion chamber **168**. Here, the gases are combusted to generate heat **QR**, with the waste product being water vapour. The recovered heat **QR** can be recycled to the electrolysis cell to assist in maintaining the advantageous operating temperature of the cell.

The previously described combustion chamber **168** can alternatively be a fuel cell. The type of fuel cell can vary from phosphoric acid fuel cells through to molten carbonate fuel cells and solid oxide cells. A fuel cell generates both heat (**QR**) and electrical energy (**WE**), and thus can supply both heat to the cell **150** or to supplement or replace the DC supply (**Es**) **152**.

Typically, these fuel cells can be of the type LaserCell TM as developed by Dr Roger Billings, the PEM Cell as available from Ballard Power Systems Inc. Canada or the Ceramic Fuel Cell (solid oxide) as developed by Ceramic Fuel Cells Ltd., Melbourne, Australia.

It is, of course, necessary to replenish the pressurised store of gases, thus requiring the continuing consumption of electrical energy. The recovered electrical energy **WE** is in excess of the energy required to drive electrolysis at the elevated temperature and is used to replace the external electrical energy source **152**, thereby completing the energy loop after the system is initially primed and started.

The present inventor has determined that there are some combinations of pressure and temperature where the efficiency of the electrolysis process becomes advantageous in terms of the total energy recovered, either as mechanical energy by virtue of a flow of gas at high pressure or as thermal energy by virtue of combustion (or by means of a fuel cell), with respect to the electrical energy consumed, to the extent of the recovered energy exceeding the energy required to sustain electrolysis at the operational pressure and temperature. This has been substantiated by experimentation. This notion has been termed "over-unity".

"Over-unity" systems can be categorised as broadly falling into three types of physical phenomena:

(i) An electrical device which produces 100 Watts of electrical energy as output after 10 Watts of electrical energy is input thereby providing 90 Watts of overunity (electrical) energy.

(ii) An electro-chemical device such as an electrolysis device where 10 Watts of electrical energy is input and 8 Watts is output being the thermal value of the hydrogen and oxygen gas output. During this process, 2 Watts of electrical energy converted to thermal energy is lost due to specific inefficiencies of the electrolysis system. Pressure - as the over-unity energy - is irrefutably produced during the process of hydrogen and oxygen gas generation during electrolysis. Pressure is a product of the containment of the two separated gases. The Law of Conservation of Energy (as referenced in "Chemistry Experimental Foundations", edited by Parry, R.W.; Steiner, L.E.; Tellefsen, R.L.; Dietz, P.M. Chap. 9, pp. 199-200, Prentice-Hall, New Jersey" and "An Experimental Science", edited by Pimentel, G.C., Chap. 7, pp. 115-117, W.H. & Freeman Co. San Francisco) is in equilibrium where the 10 watts of input equals the 8 watts thermal energy output plus the 2 watts of losses. However, this Law ends at this point. The present invention utilises the apparent additional energy being the pressure which is a by-product of the electrolysis process to achieve over-unity.

(iii) An electro-chemical device which produces an excess of thermal energy after an input of electrical energy in such devices utilised in "cold fusion" e.g. 10 watts of electrical energy as input and 50 watts of thermal energy as output.

The present invention represents the discovery of means by which the previously mentioned second phenomenon can be embodied to result in "over-unity" and the realisation of 'free' energy. As previously noted, this is the process of liberating latent molecular energy. The following sequence of events describes the basis of the availability of over-unity energy.

In a simple two plate (anode/cathode) electrolysis cell, an applied voltage differential of 1.57 DC Volts draws 0.034 Amps per cm^2 and results in the liberation of hydrogen and oxygen gas from the relevant electrode plate. The electrolyte is kept at a constant temperature of 40^0C, and is open to atmospheric pressure.

The inefficiency of an electrolytic cell is due to its ionic resistance (approximately 20%), and produces a by-product of thermal energy. The resistance reduces, as does the minimum DC voltage required to drive electrolysis, as the temperature increases. The overall energy required to dissociate the bonding electrons from the water molecule also decreases as the temperature increases. In effect, thermal energy acts as a catalyst to reduce the energy requirements in the production of hydrogen and oxygen gases from the water molecule. Improvements in efficiency are obtainable by way of a combination of thermal energy itself and the NaOH electrolyte both acting to reduce the resistance of the ionic flow of current.

Thermal 'cracking' of the water molecule is known to occur at $1,500^0$C, whereby the bonding electrons are dissociated and subsequently 'separate' the water molecule into its constituent elements in gaseous form. This thermal cracking then allows the thermal energy to become a consumable. Insulation can be introduced to conserve thermal energy, however there will always be some thermal energy losses.

Accordingly, thermal energy is both a catalyst and a consumable (in the sense that the thermal energy excites bonding electrons to a higher energetic state) in the electrolysis process. A net result from the foregoing process is that hydrogen is being produced from thermal energy because thermal energy reduces the overall energy requirements of the electrolysis system.

Referring to the graph titled "Flow Rate At A Given Temperature" shown in **Fig.16**, it has been calculated that at a temperature of $2,000^0$C, 693 litres of hydrogen/oxygen admixed gas (2:1) will be produced. The hydrogen content of this volume is 462 litres. At an energy content of 11 BTUs per litre of hydrogen, this then gives an energy amount of 5,082 BTUs (11 x 462). Using the BTU:kilowatt conversion factor of 3413:1, 5,082 BTUs of the hydrogen gas equate to 1.49 kW. Compare this with l kW to produce the 693 litres of hydrogen/oxygen (including 463 litres of hydrogen). The usage of this apparatus therefore identifies that thermal energy, through the process of electrolysis, is being converted into hydrogen. These inefficiencies, i.e. increased temperature and NaOH electrolyte, reduce with temperature to a point at approximately 1000^0C where the ionic resistance reduces to zero, and the volumetric amount of gases produced per kWh increases.

The lowering of DC voltage necessary to drive electrolysis by way of higher temperatures is demonstrated in the graph in **Fig.17** titled "The Effect of temperature on Cell Voltage".

The data in **Fig.16** and **Fig.17** have two sources. Cell voltages obtained from 0^0C up to and including 100^0C were those obtained by an electrolysis system as described above. Cell voltages obtained from 150^0C up to $2,000^0$C are theoretical calculations presented by an acknowledged authority in this field, Prof. J. O'M. Bockris. Specifically, these findings were presented in "Hydrogen Energy, Part A, Hydrogen Economy", Miami Energy Conference, Miami Beach, Florida, 1974, edited by T. Nejat Veziroglu, Plenum Press, pp. 371-379. These calculations appear on page 374.

By inspection of **Fig.17** and **Fig.18** (titled "Flow Rate of Hydrogen and Oxygen at 2:1"), it can be seen that as temperature increases in the cell, the voltage necessary to dissociate the water molecule is reduced, as is the overall energy requirement. This then results in a higher gas flow per kWh.

As constrained by the limitation of the materials within the system, the operationally acceptable temperature of the system is 1000^0C. This temperature level should not, however, be considered as a restriction. This temperature is based on the limitations of the currently commercially available materials. Specifically, this system can utilise material such as compressed Silica Fibre for the sleeve around the electrolysis plate and hydrophobic Silica Fibre (part no. QR-100HE supplied by Tokyo Roshi International Inc., also known as "Advantec") for the diaphragm (as previously discussed) which separates the electrolysis disc plates. In the process of assembling the cells, the diaphragm material and sleeved electrolysis plates **190,198** are adhered to one another by using high-temperature-resistant silica adhesive (e.g. the "Aremco" product "Ceramabond 618" which has an operational tolerance specification of $1,000^0$C).

For the electrolysis cell described above, with the electrolyte at $1,000^0$C and utilising electrical energy at the rate of 1 kWh, 167 litres of oxygen and 334 litres of hydrogen per hour will be produced.

The silica fibre diaphragm **116** previously discussed separates the oxygen and hydrogen gas streams by the mechanism of density separation, and produce a separate store of oxygen and hydrogen at pressure. Pressure from the produced gases can range from 0 to 150,000 Atmospheres. At higher pressures, density separation may not occur. In this instance, the gas molecules can be magnetically separated from the electrolyte if required.

In reference to the experiments conducted by Messrs Hamann and Linton (S.D. Hamann and M. Linton, Trans. Faraday Soc. 62,2234-2241, specifically, page 2,240), this research has proven that higher pressures can produce the same effect as higher temperatures in that the conductivity increases as temperature and/or pressure increases. At very high pressures, the water molecule dissociates at low temperatures. The reason for this is that the bonding electron is more readily removed when under high pressure. The same phenomenon occurs when the bonding electrons are at a high temperature (e.g. $1,500^0$C) but at low pressures.

As shown in **Fig.15**, hydrogen and oxygen gases are separated into independent gas streams flowing into separate pressure vessels **158,160** capable of withstanding pressures up to 150,000 Atmospheres. Separation of the two gases thereby eliminates the possibility of detonation. It should also be noted that high pressures can facilitate the use of high temperatures within the electrolyte because the higher pressure elevates the boiling point of water.

Experimentation shows that 1 litre of water can yield 1,850 litres of hydrogen/oxygen (in a ratio of 2: 1) gas mix after decomposition, this significant differential(1:1,850) is the source of the pressure. Stripping the bonding electrons from the water molecule, which subsequently converts liquid into a gaseous state, releases energy which can be utilised as pressure when this occurs in a confined space.

A discussion of experimental work in relation to the effects of pressure in electrolysis processes can be obtained from "Hydrogen Energy, Part A, Hydrogen Economy Miami Energy Conference, Miami Beach, Florida, 1974, edited by T. Nejat Veziroglu, Plenum Press". The papers presented by F.C. Jensen and F.H. Schubert on pages 425 to 439 and by John B. Pangborn and John C. Sharer on pages 499 to 508 are of particular relevance.

Attention must be drawn to the above published material; specifically on page 434, third paragraph, where reference is made to "Fig.7 shows the effect of pressure on cell voltage...". Fig. 7 on page 436 ("Effect of Pressure on SFWES Single Cell") indicates that if pressure is increased, then so too does the minimum DC voltage.

These quotes were provided for familiarisation purposes only and not as demonstrable and empirical fact. Experimentation by the inventor factually indicates that increased pressure (up to 2,450 psi) in fact lowers the minimum DC voltage.

This now demonstrable fact, whereby increased pressure actually lowers minimum DC voltage, is further exemplified by the findings of Messrs. Nayar, Ragunathan and Mitra in 1979 which can be referenced in their paper: "Development and operation of a high current density high pressure advanced electrolysis cell".

Nayar, M.G.; Ragunathan, P. and Mitra, S.K. International Journal of Hydrogen Energy (Pergamon Press Ltd.), 1980, Vol. 5, pp. 65-74. Their Table 2 on page 72 expressly highlights this as follows: "At a Current density (ASM) of 7,000 and at a temperature of 80^0C, the table shows identical Cell voltages at both pressures of 7.6 kg/cm^2 and 11.0 kg/cm^2. But at Current densities of 5,000, 6,000, 8,000, 9,000 and 10,000 (at a temperature of 80^0C), the Cell voltages were lower at a pressure of 11.0 kg/cm^2 than at a pressure of 7.6 kg/cm^2. " The present invention thus significantly improves on the apparatus employed by Mr. M.G. Nayar, et al, at least in the areas of cell plate materials, current density and cell configuration.

In the preferred form the electrode discs **192** are perforated mild steel, conductive polymer or perforated resin bonded carbon cell plates. The diameter of the perforated holes **196** is chosen to be twice the thickness of the plate in order to maintain the same total surface area prior to perforation. Nickel was utilised in the noted prior art system. That material has a higher electrical resistance than mild steel or carbon, providing the present invention with a lower voltage capability per cell.

The previously mentioned prior art system quotes a minimum current density (after conversion from ASM to Amps per square cm.) at 0.5 Amps per cm^2. The present invention operates at the ideal current density, established by experimentation, to minimise cell voltage which is 0.034 Amps per cm^2.

When compared with the aforementioned system, an embodiment of the present invention operates more efficiently due to a current density improvement by a factor of 14.7, the utilisation of better conducting cell plate material which additionally lowers cell voltage, a lower cell voltage of 1.49 at 80^0C as opposed to 1.8 volts at 80^0C, and a compact and efficient cell configuration.

In order to further investigate the findings of Messrs. M.G. Nayer, et al, the inventor conducted experiments utilising much higher pressures. For Nayer, et al, the pressures were 7.6 kg/cm^2 to 11.0 kg/cm^2, whereas inventor's pressures were 0 psi to 2,450 psi in an hydrogen/oxygen admixture electrolysis system.

This electrolysis system was run from the secondary coil of a transformer set approximately at maximum 50 Amps and with an open circuit voltage of 60 Volts. In addition, this electrolysis system is designed with reduced surface area in order that it can be housed in an hydraulic container for testing purposes. The reduced surface area subsequently caused the gas production efficiency to drop when compared with previous (i.e. more efficient) prototypes. The gas flow rate was observed to be approximately 90 litres per hour at 70^0C in this system as opposed to 310 litres per hour at 70^0C obtained from previous prototypes. All of the following data and graphs have been taken from the table shown in **Fig.19**.

Referring to **Fig.20** (titled "Volts Per Pressure Increase"), it can be seen that at a pressure of 14.7 psi (i.e. 1 Atmosphere), the voltage measured as 38.5V and at a pressure of 2,450 psi, the voltage measured as 29.4V. This confirms the findings of Nayar et al that increased pressure lowers the system's voltage. Furthermore, these experiments contradict the conclusion drawn by F.C. Jensen and F.H. Schubert ("Hydrogen Energy, Part A, Hydrogen Economy Miami Energy Conference, Miami Beach, Florida, 1974, edited by T. Nejat Veziroglu, Plenum Press", pp 425 to 439, specifically Fig. 7 on page 434) being that "... as the pressure of the water being electrolysed increases, then so too does the minimum DC Voltage". As the inventor's experiments are current and demonstrable, the inventor now presents his findings as the current state of the art and not the previously accepted findings of Schubert and Jensen.

Referring to **Fig.21** (titled "Amps Per Pressure Increase"), it can be seen that at a pressure of 14.7 psi (i.e. 1 Atmosphere being Test Run No. 1), the current was measured as 47.2A and at a pressure of 2,450 psi (Test Run No. 20), the current was measured as 63A.

Referring to **Fig.22** (titled "Kilowatts Per Pressure Increase"), examination of the power from Test Run No. 1 (1.82 kW) through to Test Run No. 20 (1.85 kW) indicates that there was no major increase in energy input required at higher pressures in order to maintain adequate gas flow.

Referring to **Fig.23** (titled "Resistance (Ohms) Per Pressure Increase"), the resistance was calculated from Test Run No. 1 (0.82 ohms) to Test Run No. 20 (0.47 ohms). These data indicate that the losses due to resistance in the electrolysis system at high pressures are negligible.

Currently accepted convention has it that dissolved hydrogen, due to high pressures within the electrolyte, would cause an increase in resistance because hydrogen and oxygen are bad conductors of ionic flow. The net result of which would be that this would decrease the production of gases.

These tests indicate that the ions find their way around the H2 and O2 molecules within the solution and that at higher pressures, density separation will always cause the gases to separate from the water and facilitate the movement of the gases from the electrolysis plates. A very descriptive analogy of this phenomenon is where the ion is about the size of a football and the gas molecules are each about the size of a football field thereby allowing the ion a large manoeuvring area in which to skirt the molecule.

Referring to **Fig.24** (titled "Pressure Differential (Increase)"), it can be seen that the hydrogen/oxygen admixture caused a significant pressure increase on each successive test run from Test Run No. 1 to Test Run No. 11. Test Runs thereafter indicated that the hydrogen/oxygen admixture within the electrolyte solution imploded at the point of conception (being on the surface of the plate).

Referring again to the table of **Fig.19**, it can be noted the time taken from the initial temperature to the final temperature in Test Run No. 12 was approximately half the time taken in Test Run No. 10. The halved elapsed time (from 40^0C to 70^0C) was due to the higher pressure causing the hydrogen/oxygen admixture to detonate which subsequently imploded within the system thereby releasing thermal energy.

Referring to the table shown in **Fig.25** (titled "Flow Rate Analysis Per Pressure Increase"), these findings were brought about from flow rate tests up to 200 psi and data from **Fig.24**. These findings result in the data of **Fig.25** concerning gas flow rate per pressure increase. Referring to **Fig.25**, it can be seen that at a pressure of 14.7 psi (1 Atmosphere) a gas production rate of 88 litres per kWh is being achieved. At 1,890 psi, the system produces 100 litres per kWh. These findings point to the conclusion that higher pressures do not affect the gas production rate of the system, the gas production rate remains constant between pressures of 14.7 psi (1 Atmosphere) and 1,890 psi.

Inferring from all of the foregoing data, increased pressure will not adversely affect cell performance (gas production rate) in separation systems where hydrogen and oxygen gases are produced separately, nor as a combined admixture. Therefore, in an enclosed electrolysis system embodying the invention, the pressure can be allowed to build up to a predetermined level and remain at this level through continuous (on-demand) replenishment. This pressure is the over-unity energy because it has been obtained during the normal course of electrolysis operation without additional energy input. This over-unity energy (i.e. the produced pressure) can be utilised to maintain the requisite electrical energy supply to the electrolysis system as well as provide useful work.

The following formulae and subsequent data do not take into account the apparent efficiencies gained by pressure increase in this electrolysis system such as the gained efficiency factors highlighted by the previously quoted Hamann and Linton research. Accordingly, the over-unity energy should therefore be considered as conservative claims and that such claimed over-unity energy would in fact occur at much lower pressures.

This over-unity energy can be formalised by way of utilising a pressure formula as follows: $E = (P - P_O) V$ which is the energy (E) in Joules per second that can be extracted from a volume (V) which is cubic meters of gas per second at a pressure (P) measured in Pascals and where P_0 is the ambient pressure (i.e. 1 Atmosphere).

In order to formulate total available over-unity energy, we will first use the above formula but will not take into account efficiency losses. The formula is based on a flow rate of 500 litres per kWh at $1{,}000^0$C. When the gases are produced in the electrolysis system, they are allowed to self-compress up to 150,000 Atmospheres which will then produce a volume (V) of 5.07×10^{-8} m^3/sec.

Work [Joules/sec] = $((150-1) \times 10^8)\ 5.07 \times 10^{-8}\ m^3/sec = 760.4$ Watts

The graphs in **Figs.27-29** (Over-Unity in watt-hours) indicate over-unity energy available excluding efficiency losses. However, in a normal work environment, inefficiencies are encountered as energy is converted from one form to another.

The results of these calculations will indicate the amount of surplus- over-unity energy after the electrolysis system has been supplied with its required 1 kWh to maintain its operation of producing the 500 Iph of hydrogen and oxygen (separately in a ratio of 2:1).

The following calculations utilise the formula stated above, including the efficiency factor. The losses which we will incorporate will be 10% loss due to the energy conversion device (converting pressure to mechanical energy, which is represented by device **162** in **Fig.15**) and 5% loss due to the DC generator $\mathbf{W_e}$ providing a total of 650 watt-hours which results from the pressurised gases.

Returning to the 1 kWh, which is required for electrolysis operation, this 1 kWh is converted (during electrolysis) to hydrogen and oxygen. The 1 kWh of hydrogen and oxygen is fed into a fuel cell. After conversion to electrical energy in the fuel cell, we are left with 585 watt-hours due to a 65 % efficiency factor in the fuel cell (35 % thermal losses are fed back into electrolysis unit **150** via $\mathbf{Q_r}$ in **Fig.15**).

Fig.30 graphically indicates the total over-unity energy available combining a fuel cell with the pressure in this electrolysis system in a range from 0 kAtmospheres to 150 kAtmospheres. The data in **Fig.30** have been compiled utilising the previously quoted formulae where the watt-hours findings are based on incorporating the 1 kWh required to drive the electrolysis system, taking into account all inefficiencies in the idealised electrolysis system (complete the loop) and then adding the output energy from the pressurised electrolysis system with the output of the fuel cell. This graph thereby indicates the energy break-even point (at approximately 66 kAtmospheres) where the idealised electrolysis system becomes self-sustaining.

In order to scale up this system for practical applications, such as power stations that will produce 50 MW of available electrical energy (as an example), the required input energy to the electrolysis system will be 170 MW (which is continually looped).

The stores of high pressure gases can be used with a hydrogen/oxygen internal combustion engine, as shown in **Figs. 31A to 31E**. The stores of high pressure gases can be used with either forms of combustion engines having an expansion stroke, including turbines, rotary, Wankel and orbital engines. One cylinder of an internal combustion engine is represented, however it is usually, but not necessarily always the case, that there will be other cylinders in the engine offset from each other in the timing of their stroke. The cylinder **320** houses a piston head **322** and crank **324**, with the lower end of the crank **324** being connected with a shaft **326**. The piston head **322** has conventional rings **328** sealing the periphery of the piston head **322** to the bore of the cylinder **320**.

A chamber **330**, located above the top of the piston head **322**, receives a supply of regulated separated hydrogen gas and oxygen gas via respective inlet ports **332,334**. There is also an exhaust port **336** venting gas from the chamber **330**.

The engine's operational cycle commences as shown in **Fig.31A**, with the injection of pressurised hydrogen gas, typically at a pressure of 5,000 psi to 30,000 psi, sourced from a reservoir of that gas (not shown). The oxygen gas port **334** is closed at this stage, as is the exhaust port **336**. Therefore, as shown in **Fig.31B**, the pressure of gas forces the piston head **322** downwards, thus driving the shaft **326**. The stroke is shown as distance "**A**".

At this point, the oxygen inlet **334** is opened to a flow of pressurised oxygen, again typically at a pressure of 5,000 psi to 30,000 psi, the volumetric flow rate being one half of the hydrogen already injected, so that the hydrogen and oxygen gas within the chamber **330** are the proportion 2:1.

Conventional expectations when injecting a gas into a confined space (e.g. such as a closed cylinder) are that gases will have a cooling effect on itself and subsequently its immediate environment (e.g. cooling systems/refrigeration). This is not the case with hydrogen. The inverse applies where hydrogen, as it is being injected, heats itself up and subsequently heats up its immediate surroundings. This effect, being the inverse of other gases, adds to the efficiency of the overall energy equation when producing over-unity energy.

As shown in **Fig.31C**, the piston head **322** has moved a further stroke, shown as distance "**B**", at which time there is self-detonation of the hydrogen and oxygen mixture. The hydrogen and oxygen inlets **332,334** are closed at this point, as is the exhaust **336.**

As shown in **Fig.31D**, the piston head is driven further downwards by an additional stroke, shown as distance "**C**", to an overall stroke represented by distance "**D**". The added piston displacement occurs by virtue of the detonation.

As shown in **Fig.31E**, the exhaust port **336** is now opened, and by virtue of the kinetic energy of the shaft **326** (or due to the action of others of the pistons connected with the shaft), the piston head **322** is driven upwards, thus exhausting the waste steam by the exhaust port **336** until such time as the situation of **Fig.31E** is achieved so that the cycle can repeat.

A particular advantage of an internal combustion motor constructed in accordance with the arrangement shown in **Figs.31A to 31E** is that no compression stroke is required, and neither is an ignition system required to ignite the working gases, rather the pressurised gases spontaneously combust when provided in the correction proportion and under conditions of high pressure.

Useful mechanical energy can be extracted from the internal combustion engine, and be utilised to do work. Clearly the supply of pressurised gas must be replenished by the electrolysis process in order to allow the mechanical work to continue to be done. Nevertheless, the inventor believes that it should be possible to power a vehicle with an internal combustion engine of the type described in **Figs.31A to 31E**, with that vehicle having a store of the gases generated by the electrolysis process, and still be possible to undertake regular length journeys with the vehicle carrying a supply of the gases in pressure vessels (somewhat in a similar way to, and the size of, petrol tanks in conventional internal combustion engines).

When applying over-unity energy in the form of pressurised hydrogen and oxygen gases to this internal combustion engine for the purpose of providing acceptable ranging (i.e. distance travelled), pressurised stored gases as mentioned above may be necessary to overcome the problem of mass inertia (e.g. stop-start driving). Inclusion of the stored pressurised gases also facilitates the ranging (i.e. distance travelled) of the vehicle.

Over-unity energy (as claimed in this submission) for an average sized passenger vehicle will be supplied at a continual rate of between 20 kW and 40 kW. In the case of an over-unity energy supplied vehicle, a supply of water (e.g. similar to a petrol tank in function) must be carried in the vehicle.

Clearly electrical energy is consumed in generating the gases. However it is also claimed by the inventor that an over-unity energy system can provide the requisite energy thereby overcoming the problem of the consumption of fossil fuels either in conventional internal combustion engines or in the generation of the electricity to drive the electrolysis process by coal, oil or natural gas generators.

Experimentation by the inventor shows that if 1,850 litres of hydrogen/oxygen gas mix (in a ratio of 2:1) is detonated, the resultant product is 1 litre of water and 1,850 litres of vacuum if the thermal value of the hydrogen and oxygen gas mix is dissipated. At atmospheric pressure, 1 litre of admixed hydrogen/oxygen (2:1) contains 11 BTUs of thermal energy. Upon detonation, this amount of heat is readily dissipated at a rate measured in microseconds which subsequently causes an implosion (inverse differential of 1,850:1). Tests conducted by the inventor at 3 atmospheres (hydrogen/oxygen gas at a pressure of 50 psi) have proven that complete implosion does not occur. However, even if the implosion container is heated (or becomes heated) to 400C, total implosion will still occur.

This now available function of idiosyncratic implosion can be utilised by a pump taking advantage of this action. Such a pump necessarily requires an electrolysis gas system such as that described above, and particularly shown in **Fig.6**.

Figs. 32A-32C show the use of implosion and its cycles in a pumping device **400**. The pump **400** is initially primed from a water inlet **406**. The water inlet **406** then is closed-off and the hydrogen/oxygen gas inlet **408** is opened.

As shown in **Fig.32B**, the admixed hydrogen/oxygen gas forces the water upward through the one-way check valve **410** and outlet tube **412** into the top reservoir **414**. The one-way check valves **410,416** will not allow the water to drop back into the cylinder **404** or the first reservoir **402**. This force equates to lifting the water over a distance. The gas inlet valve **408** then is closed, and the spark plug **418** detonates the gas mixture which causes an implosion (vacuum). Atmospheric pressure forces the water in reservoir **402** up through tube **420**.

Fig.32C shows the water having been transferred into the pump cylinder **404** by the previous action. The implosion therefore is able to 'lift' the water from the bottom reservoir **402** over a distance which is approximately the length of tube **420**.

The lifting capacity of the implosion pump is therefore approximately the total of the two distances mentioned. This completes the pumping cycle, which can then be repeated after the reservoir **402** has been refilled.

Significant advantages of this pump are that it does not have any diaphragms, impellers nor pistons thereby essentially not having any moving parts (other than solenoids and one-way check valves). As such, the pump is significantly maintenance free when compared to current pump technology.

It is envisaged that this pump with the obvious foregoing positive attributes and advantages in pumping fluids, semi-fluids and gases can replace all currently known general pumps and vacuum pumps with significant benefits to the end-user of this pump.

CLAIMS

1. A looped energy system for the generation of excess energy available to do work, said system comprising:
An electrolysis cell unit receiving a supply of water and for liberating separated hydrogen gas and oxygen gas by electrolysis due to a DC voltage applied across respective anodes and cathodes of said cell unit;
Hydrogen gas receiver means for receiving and storing hydrogen gas liberated by said cell unit;
Oxygen gas receiver means for receiving and storing oxygen gas liberated by said cell unit;
Gas expansion means for expanding said stored gases to recover expansion work; and
Gas combustion means for mixing and combusting said expanded hydrogen gas and oxygen gas to recover combustion work; and in which a proportion of the sum of the expansion work and the combustion work sustains electrolysis of said cell unit to retain operational gas pressure in said hydrogen and oxygen gas receiver means such that the energy system is self-sustaining and there is excess energy available from said sum of energies.

2. A looped energy system for the generation of excess energy available to do work, said system comprising:
An electrolysis cell unit receiving a supply of water and for liberating separated hydrogen gas and oxygen gas by electrolysis due to a DC voltage applied across respective anodes and cathodes of said cell unit;
Hydrogen gas receiver means for receiving and storing hydrogen gas liberated by said cell unit;
Oxygen gas receiver means for receiving and storing oxygen gas liberated by said cell unit;
Gas expansion means for expanding said stored gases to recover expansion work; and
Fuel cell means for recovering electrical work from said expanded hydrogen gas and oxygen gas; and wherein a proportion of the sum of the expansion work and the recovered electrical work sustains electrolysis of said cell

unit to retain operational gas pressure in said hydrogen and oxygen gas receiver means such that the energy system is self-sustaining and there is excess energy available from said sum of energies.

3. An energy system as claimed in Claim 1 or Claim 2 further comprising mechanical-to-electrical energy conversion means coupled to said gas expansion means to convert the expansion work to electrical expansion work to be supplied as said DC voltage to said cell unit.

4. An energy system as claimed in any one of the preceding claims wherein said water in said cell unit is maintained above a predetermined pressure by the effect of back pressure from said gas receiver means and above a predetermined temperature resulting from input heat arising from said combustion work and/or said expansion work.

5. A method for the generation of excess energy available to do work by the process of electrolysis, said method comprising the steps of:
Electrolysing water by a DC voltage to liberate separated hydrogen gas and oxygen gas;
Separately receiving and storing said hydrogen gas and oxygen gas in a manner to be self-pressuring;
Separately expanding said stores of gas to recover expansion work;
Combusting said expanded gases together to recover combustion work; and
Applying a portion of the sum of the expansion work and the combustion work as said DC voltage to retain operational gas pressures and sustain said electrolysing step, there thus being excess energy of said sum available.

6. A method for the generation of excess energy available to do work by the process of electrolysis, said method comprising the steps of:
Electrolysing water by a DC voltage to liberate separated hydrogen gas and oxygen gas;
Separately receiving and storing said hydrogen gas and oxygen gas in a manner to be self-pressuring;
Separately expanding said stores of gas to recover expansion work;
Passing said expanded gases together through a fuel cell to recover electrical work; and
Applying a portion of the sum of the expansion work and the recovered electrical work as said DC voltage to retain operational gas pressures and sustain said electrolysing step, there thus being excess energy of said sum available.

7. An internal combustion engine powered by hydrogen and oxygen comprising:
At least one cylinder and at least one reciprocating piston within the cylinder;
A hydrogen gas input port in communication with the cylinder for receiving a supply of pressurised hydrogen;
An oxygen gas input port in communication with the cylinder for receiving a supply of pressurised oxygen; and
An exhaust port in communication with the cylinder and wherein the engine is operable in a two-stroke manner whereby, at the top of the stroke, hydrogen gas is supplied by the respective inlet port to the cylinder driving the piston downwards, oxygen gas then is supplied by the respective inlet port to the cylinder to drive the cylinder further downwards, after which time self-detonation occurs and the piston moves to the bottom of the stroke and upwardly again with said exhaust port opened to exhaust water vapour resulting from the detonation.

8. An engine as claimed in Claim 7, wherein there are a plurality of said cylinder and an equal plurality of said pistons, said pistons being commonly connected to a shaft and relatively offset in stroke timing to co-operate in driving the shaft.

9. An implosion pump comprising a combustion chamber interposed, and in communication with, an upper reservoir and a lower reservoir separated by a vertical distance across which water is to be pumped, said chamber receiving admixed hydrogen and oxygen at a pressure sufficient to lift a volume of water the distance therefrom to the top reservoir, said gas in the chamber then being combusted to create a vacuum in said chamber to draw water from said lower reservoir to fill said chamber, whereupon a pumping cycle is established and can be repeated.

10. An implosion pump as claimed in Claim 9, further comprising conduit mean connecting a respective reservoir with said chamber and one-way flow valve means located in each conduit means to disallow reverse flow of water from said upper reservoir to said chamber and from said chamber to said lower reservoir.

11. A parallel stacked arrangement of cell plates for a water electrolysis unit, the cell plates alternately forming an anode and cathode of said electrolysis unit, and said arrangement including separate hydrogen gas and oxygen gas outlet port means respectively in communication with said anode cell plates and said cathode call plates and extending longitudinally of said stacked plates, said stacked cell plates being configured in the region of said conduits to mate in a complementary manner to form said conduits such that a respective anode cell plate or cathode cell plate is insulated from the hydrogen gas conduit or the oxygen gas conduit.

12. An arrangement of cell plates as claimed in Claim 11, wherein said configuration is in the form of a flanged foot that extends to a flanged foot of the next adjacent like-type of anode or cathode cell plate respectively.

Henry Paine's HHO Fuel Conversion System

This is a very interesting patent which describes a simple system for overcoming the difficult problem of storing the hydrogen/oxygen gas mix produced by electrolysis of water. Normally this "hydroxy" gas mix is too dangerous to be compressed and stored like propane and butane are, but this patent states that hydroxy gas can be converted to a more benign form merely by bubbling it through a hydrocarbon liquid. Henry automatically speaks of turpentine in the patent, which strongly suggests that he used it himself, and consequently, it would probably be a good choice for any tests of the process.

This patent is more than 120 years old and has only recently been brought to the attention of the various "watercar" internet Groups. Consequently, it should be tested carefully before being used. Any tests should be done with extreme caution, taking every precaution against injury or damage should the mixture explode. It should be stressed that hydroxy gas is highly explosive, with a flame front speed far too fast to be contained by conventional commercial flashback arrestors. It is always essential to use a bubbler to contain any accidental ignition of the gas coming out of the electrolyser cell, as shown here:

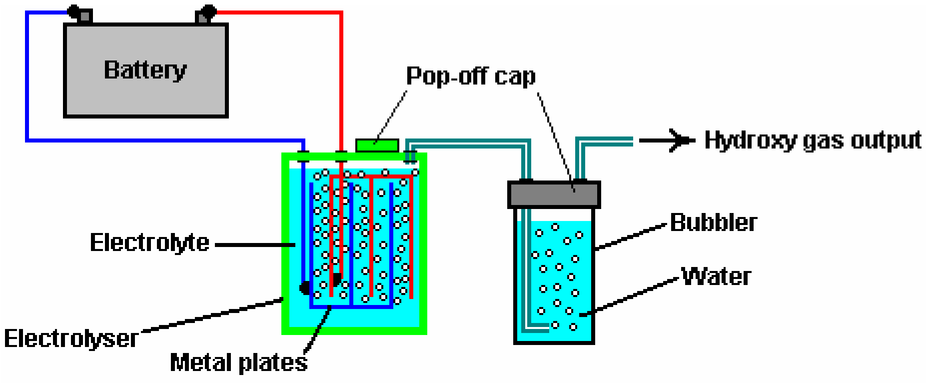

For the purposes of a test of the claims of this patent, it should be sufficient to fill the bubbler with turpentine rather than water, though if possible, it would be good to have an additional bubbler container for the turpentine, in which case, the bubbler with the water should come between the turpentine and the source of the flame. Any tests should be done in an open space, ignited remotely and the person running the test should be well protected behind a robust object. A disadvantage of hydroxy gas is that it requires a very small orifice in the nozzle used for maintaining a continuous flame and the flame temperature is very high indeed. If this patent is correct, then the modified gas produced by the process should be capable of being used in any conventional gas burner.

US Letters Patent 308,276 18th November 1884 Inventor: Henry M. Paine

PROCESS OF MANUFACTURING ILLUMINATING GAS

To all whom it may concern:

Be it known that I, Henry M. Paine, a citizen of the United States, residing at Newark, in the county of Essex and State of New Jersey, have invented certain new and useful Improvements in the Process of Manufacturing Illuminating-Gas; and I do hereby declare the following to be a full, clear, and exact description of the invention, such as will enable others skilled in the art to which it appertains, to make and use the same, reference being had to the accompanying drawing, and to letters or figures of reference marked thereon, which form a part of this specification.

The present invention relates to the processes for manufacturing illuminating-gas, as explained and set forth here. Up to now, it has always been found necessary to keep the constituent gases of water separated from each other from the point of production to the point of ignition, as hydrogen and oxygen being present in the proper proportions for a complete reunion, form a highly-explosive mixture. Consequently, the two gases have either been preserved in separate holders and only brought together at the point of ignition, or else the hydrogen alone has been saved and the oxygen to support combustion has been drawn from the open air, and the hydrogen gas thus obtained has been carburetted by itself by passing through a liquid hydrocarbon, which imparts luminosity to the flame.

I have discovered that the mixed gases obtained by the decomposition of water through electrolysis can be used with absolute safety if passed through a volatile hydrocarbon; and my invention consists of the new gas thus obtained, and the process described here for treating the gas mixture whereby it is rendered safe for use and storage under the same conditions as prevail in the use of ordinary coal-gas, and is transformed into a highly-luminiferous gas.

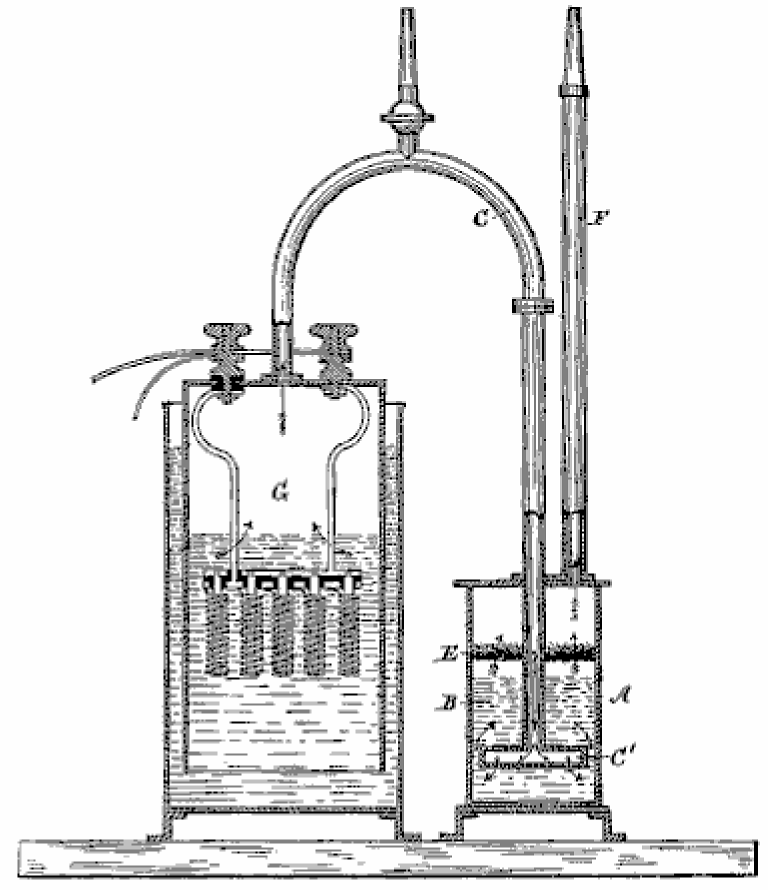

In the accompanying drawing, which shows in sectional elevation, an apparatus adapted to carry out my invention, **G** is a producer for generating the mixed gases, preferably by the decomposition of water by an electric current. **A** is a tank partly filled with turpentine, camphene or other hydrocarbon fluid as indicated by **B**. The two vessels are connected by the pipe **C**, the end of which terminates below the surface of the turpentine, and has a broad mouthpiece **C'**, with numerous small perforations, so that the gas rises through the turpentine in fine streams or bubbles in order that it may be brought intimately in contact with the hydrocarbon.

Above the surface of the turpentine there may be a diaphragm **E**, of wire netting or perforated sheet metal, and above this, a layer of wool or other fibre packed sufficiently tightly to catch all particles of the hydrocarbon fluid which may be mechanically held in suspension, but loose enough to allow free passage of the gases. The pipe **F**, conducts the mixed gases off directly to the burners or to a holder.

I am aware that the hydrocarbons have been used in the manufacturer of water-gas from steam, and, as stated above, hydrogen gas alone has been carburetted; but I am not aware of any attempt being made to treat the explosive mixed gases in this manner.

Experiments have demonstrated that the amount of turpentine or other volatile hydrocarbon taken up by the gases in this process is very small and that the consumption of the hydrocarbon does not appear to bear any fixed ratio to the volume of the mixed gases passed through it. I do not, however, attempt to explain the action of the hydrocarbon on the gases.

What I claim as my invention and desire to secure by Letters Patent, is -

The process described here of manufacturing gas, which consists in decomposing water by electrolysis and conjointly passing the mixed constituent gases of water thus obtained, through a volatile hydrocarbon, substantially as and for the purpose set forth.

In testimony whereof I affix my signature in presence of two witnesses.

HENRY M. PAINE

Witnesses:
Bennet Osborne, Jr.,
W. E. Redding

Henry Paine's apparatus would therefor be:

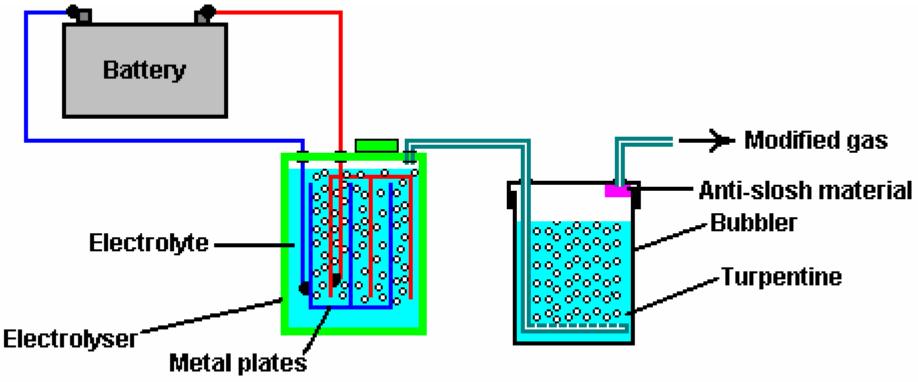

Boris Volfson's Space Drive

US Patent 6,960,975 Nov.1, 2005 Inventor: Boris Volfson

SPACE VEHICLE PROPELLED BY THE PRESSURE OF INFLATIONARY VACUUM STATE

ABSTRACT

A space vehicle propelled by the pressure of inflationary vacuum state is provided comprising a hollow superconductive shield, an inner shield, a power source, a support structure, upper and lower means for generating an electromagnetic field, and a flux modulation controller. A cooled hollow superconductive shield is energised by an electromagnetic field resulting in the quantised vortices of lattice ions projecting a gravitomagnetic field that forms a space-time curvature anomaly outside the space vehicle. The space-time curvature imbalance, the space-time curvature being the same as gravity, provides for the space vehicle's propulsion. The space vehicle, surrounded by the space-time anomaly, may move at a speed approaching the light-speed characteristic for the modified locale.

US Patent References:

3626605	Dec., 1971	Wallace.
3626606	Dec., 1971	Wallace.
3823570	Jul., 1974	Wallace.
5197279	Mar., 1993	Taylor.
6353311	Mar., 2002	Brainard et al.

Other References:
M.T. French, "To the Stars by Electromagnetic Propulsion", http://www.mtjf.demon.co.uk/antigravp2.htm#cforce.

Evgeny Podkletnov, "Weak Gravitational Shielding Properties of Composite Bulk $YBa_2Cu_33O_{(7-x)}$ Superconductor Below 70K Under E.M. Field", LANL database number cond-mat/9701074, v. 3, 10 pages, Sep. 16, 1997.

N. LI & D.G. Torr, "Effects of a Gravitomagnetic Field on Pure Superconductors", Physical Review, vol. 43, p. 457, 3 pages, Jan. 15, 1991.

Evgeny Podkletnov, Giovanni Modanese "Impulse Gravity Generator Based on Charged $YBa_2Cu_33O_{7-y}$ Superconductor with Composite Crystal Structure", arXiv.org/physics database, #0108005 vol. 2, 32 pages, 8 figures, Aug. 30, 2001.

S. Kopeikin & E. Fomalont, "General Relativistic Model for Experimental Measurement of the Speed of Propagation of Gravity by VLBI", Proceedings of the 6th European VLBI Network Symposium Jun. 25-28, 2002, Bonn, Germany, 4 pages.

Sean M. Carroll, "The Cosmological Constant", http://pancake.uchicago.edu/˜ carroll/encyc/, 6 pages.

Chris Y. Taylor and Giovanni Modanese, "Evaluation of an Impulse Gravity Generator Based Beamed Propulsion Concept", American Institute of Aeronautics and Astronautics, Inc., 2002.

Peter L. Skeggs, "Engineering Analysis of the Podkletnov Gravity Shielding Experiment", Quantum Forum, Nov. 7, 1997, http://www.inetarena'.com/˜ noetic/pls/podlev.html).

BACKGROUND OF THE INVENTION

The existence of a magnetic-like gravitational field has been well established by physicists for general relativity, gravitational theories, and cosmology. The consequences of the effect of electromagnetically-affected gravity could be substantial and have many practical applications, particularly in aviation and space exploration.

There are methods known for converting electromagnetism into a propulsive force that potentially generates a large propulsive thrust. According to these methods, the machine thrust is produced by rotating, reciprocating masses in the following ways: centrifugal thrust, momentum thrust, and impulse thrust. ("To the Stars by Electromagnetic Propulsion", M. T. French, http://www.mtjf.demon.co.uk/antigravp2.htm#cforce).

However, the electromagnetic propulsion in an ambient space, or space that is not artificially modified, is not practical for interstellar travel because of the great distances involved. No interstellar travel is feasible without some form of distortion of space. In turn, no alteration of space is possible without the corresponding deformation of time. Gravitomagnetic alteration of space, resulting in the space-time curvature anomaly that could propel the space vehicle, could be a feasible approach to future space travel.

In the late 1940s, H. B. G. Casimir proved that the vacuum is neither particle nor field-free. It is a source of zero-point-fluctuation (ZPF) of fields such as the vacuum gravitomagnetic field. ZPF fields lead to real, measurable physical consequences such as the Casimir force. The quantised hand-made electromagnetic processes, such as those occurring in superconductors, affect the similarly quantised ZPFs. The most likely reason is the electron-positron creation and annihilation, in part corresponding to the "polarisation effect" sited by Evgeny Podkletnov in explaining the gravitomagnetic effect reportedly observed by him in 1992. ("Weak Gravitational Shielding Properties of Composite Bulk $YBa_2Cu_33O_{(7-x)}$ Superconductor Below 70 K Under E.M. Field", Evgeny Podkletnov, LANL database number cond-mat/9701074, v. 3, 10 pages, 16 Sep. 1997).

The investigation of gravitomagnetism, however, started well before Podkletnov. In the U.S. Pat. No. 3,626,605, Henry Wm. Wallace describes an experimental apparatus for generating and detecting a secondary gravitational field. He also shows how a time-varying gravitomagnetic field can be used to shield the primary background of a gravitoelectric field.

In the U.S. Pat. No. 3,626,606, Henry Wm. Wallace provides a variation of his earlier experiment. A type III-V semiconductor material, of which both components have unpaired nuclear spin, is used as an electronic detector for the gravitomagnetic field. The experiment demonstrates that the material in his gravitomagnetic field circuit has hysterisis and remanence effects analogous to magnetic materials.

In the U.S. Pat. No. 3,823,570, Henry Wm. Wallace provides an additional variation of his experiment. Wallace demonstrates that, by aligning the nuclear spin of materials having an odd number of nucleons, a change in specific heat occurs.

In the U.S. Pat. No. 5,197,279, James R. Taylor discloses Electromagnetic Propulsion Engine where solenoid windings generate an electromagnetic field that, without the conversion into a gravitomagnetic field, generates the thrust necessary for the propulsion.

In the U.S. Pat. No. 6,353,311 B1, John P. Brainard et al. offer a controversial theory of Universal Particle Flux Field, and in order to prove it empirically, provide a shaded motor-type device. This device is also intended for extracting energy from this hypothetical Field.

In the early 1980s, Sidney Coleman and F. de Luca noted that the Einsteinean postulate of a homogeneous Universe, while correct in general, ignores quantised local fluctuation of the pressure of inflationary vacuum state, this fluctuation causing local cosmic calamities. While the mass-less particles propagate through large portions of Universe at light speed, these anomaly bubbles, depending on their low or high relative vacuum density, cause a local increase or decrease of the propagation values for these particles. Scientists disagree about the possibility, and possible ways, to artificially create models of such anomalies.

In the early 1990s, Ning Li and D. G Torr described a method and means for converting an electromagnetic field into a gravitomagnetic field. Li and Torr suggested that, under the proper conditions, the minuscule force fields of superconducting atoms can "couple", compounding in strength to the point where they can produce a repulsion force ("Effects of a Gravitomagnetic Field on Pure Superconductors", N. Li and D. G. Torr, Physical Review, Volume 43, Page 457, 3 pages, 15 Jan. 1991).

A series of experiments, performed in the early 1990s by Podkletnov and R. Nieminen, reportedly resulted in a reduction of the weights of objects placed above a levitating, rotating superconductive disk subjected to high frequency magnetic fields. These results substantially support the expansion of Einstainean physics offered by Li & Torr. Podkletnov and Giovanni Modanese have provided a number of interesting theories as to why the weight reduction effect could have occurred, citing quantum gravitational effects, specifically, a local change in the cosmological constant. The cosmological constant, under ordinary circumstances, is the same everywhere. But, according to Podkletnov and Modanese, above a levitating, rotating superconductive disk exposed to high frequency magnetic fields, it is modified. ("Impulse Gravity Generator Based on Charged $YBa_2Cu_33O_{7-y}$ Superconductor with Composite Crystal Structure", Evgeny Podkletnov, Giovanni Modanese, arXiv.org/physics database, #0108005 volume 2, 32 pages, 8 figures, Aug. 30, 2001).

In the July 2004 paper, Ning Wu hypothesised that exponential decay of the gravitation gauge field, characteristic for the unstable vacuum such as that created by Podkletnov and Nieminen, is at the root of the gravitational shielding effects (Gravitational Shielding Effects in Gauge Theory of Gravity, Ning Wu, arXiv:hep-th/0307225 v 1 23 Jul. 2003, 38 pages incl. 3 figures, July 2004).

In 2002, Edward Fomalont and Sergei Kopeikin measured the speed of propagation of gravity. They confirmed that the speed of propagation of gravity matches the speed of light. ("General Relativistic Model for Experimental Measurement of the Speed of Propagation of Gravity by VLBI", S. Kopeikin and E. Fomalont, Proceedings of the 6th European VLBI Network Symposium Jun. 25-28 2002, Bonn, Germany, 4 pages).

String theory unifies gravity with all other known forces. According to String theory, all interactions are carried by fundamental particles, and all particles are just tiny loops of space itself forming the space-time curvature. Gravity and bent space are the same thing, propagating with the speed of light characteristic of the particular curvature. In light of the Fomalont and Kopeikin discovery, one can conclude that if there is a change in the speed of propagation of gravity within the space-time curvature, then the speed of light within the locality would also be affected.

In general relativity, any form of energy affects the gravitational field, so the vacuum energy density becomes a potentially crucial ingredient. Traditionally, the vacuum is assumed to be the same everywhere in the Universe, so the vacuum energy density is a universal number. The cosmological constant Lambda is proportional to the vacuum pressure:

$$\rho_\Lambda:\ \Lambda=(8\pi G/3c^2)\rho_\Lambda$$

Where:
G is Newton's constant of gravitation and
c is the speed of light
("The Cosmological Constant", Sean M. Carroll, http://pancake.uchicago.edu/˜carroll/encyc/, 6 pages). Newer theories, however, permit local vacuum fluctuations where even the "universal" constants are affected:

$$\Lambda_1=(8\pi G_1/3c_1^{\,2})\rho_{\Lambda_1}$$

Analysing physics laws defining the cosmological constant, a conclusion can be drawn that, if a levitating, rotating superconductive disk subjected to high frequency magnetic fields affects the cosmological constant within a locality, it would also affect the vacuum energy density. According to the general relativity theory, the gravitational attraction is explained as the result of the curvature of space-time being proportional to the cosmological constant. Thus, the change in the gravitational attraction of the vacuum's subatomic particles would cause a local anomaly in the curvature of the Einsteinean space-time.

Time is the fourth dimension. Lorentz and Einstein showed that space and time are intrinsically related. Later in his life, Einstein hypothesised that time fluctuates both locally and universally. Ruggero Santilli, recognised for expanding relativity theory, has developed the isocosmology theory, which allows for variable rates of time. Time is also a force field only detected at speeds above light speed. The energy of this force field grows as its propagation speed declines when approaching light-speed. Not just any light-speed: the light-speed of a locale. If the conditions of the locale were modified, this change would affect the local time rate relative to the rate outside the affected locale, or ambient rate. The electromagnetically-generated gravitomagnetic field could be one such locale modifier.

Analysing the expansion of Einstainean physics offered by Li & Torr, one could conclude that gravity, time, and light speed could be altered by the application of electromagnetic force to a superconductor.

By creating a space-time curvature anomaly associated with lowered pressure of inflationary vacuum state around a space vehicle, with the lowest vacuum pressure density located directly in front of the vehicle, a condition could be created where gravity associated with lowered vacuum pressure density pulls the vehicle forward in modified space-time.

By creating a space-time curvature anomaly associated with elevated pressure of inflationary vacuum state around the space vehicle, with the point of highest vacuum pressure density located directly behind the vehicle, a condition could be created where a repulsion force associated with elevated vacuum pressure density pushes the space vehicle forward in modified space-time. From the above-mentioned cosmological constant equation, re-written as:

$$\rho_\Lambda = \frac{3c^2}{8\pi G}\Lambda$$

it is clear that the increase in the vacuum pressure density could lead to a substantial increase in the light-speed. If the space vehicle is moving in the anomaly where the local light-speed is higher than the light-speed of the ambient vacuum, and if this vehicle approaches this local light-speed, the space vehicle would then possibly exceed the light-speed characteristic for the ambient area.

The levitating and rotating superconductor disk, which Podkletnov used to protect the object of experiment from the attraction produced by the energy of the vacuum, was externally energised by the externally-powered solenoid coils. Thus, Podkletnov's system is stationary by definition and not suitable for travel in air or space. Even if the superconductive disk is made part of the craft, and if it is energised by the energy available on the craft, the resulting anomaly is one-sided, not enveloping, and not providing the variable speed of light (VSL) environment for the craft.

In a recent (2002) article, Chris Y. Tailor and Modanese propose to employ an impulse gravity generator directing, from an outside location, an anomalous beam toward a spacecraft, this beam acting as a repulsion force field producing propulsion for the spacecraft. ("Evaluation of an Impulse Gravity Generator Based Beamed Propulsion Concept", Chris Y. Taylor and Giovanni Modanese, American Institute of Aeronautics and Astronautics, Inc., 2002, 21 pages, 10 figures). The authors of the article, however, didn't take into account the powerful quantised processes of field dispersion, which would greatly limit the distance of propagation of the repulsive force. At best, the implementation of this concept could assist in acceleration and deceleration at short distances from the impulse gravity generator, and only along a straight line of travel. If the travel goal is a space exploration mission rather than the shuttle-like commute, the proposed system is of little use.

Only a self-sufficient craft, equipped with the internal gravity generator and the internal energy source powering this generator, would have the flexibility needed to explore new frontiers of space. The modification of the space-time curvature all around the spacecraft would allow the spacecraft to approach the light-speed characteristic for the modified locale, this light-speed, when observed from a location in the ambient space, being potentially many times higher than the ambient light-speed. Then, under sufficient local energies, that is, energies available on the spacecraft, very large intergalactic distances could be reduced to conventional planetary distances.

In "The First Men in the Moon" (1903), H. G. Wells anticipates gravitational propulsion methods when he describes gravity repelling "cavorite." Discovered by Professor Cavor, the material acts as a "gravity shield" allowing Cavor's vehicle to reach the Moon. Prof. Cavor built a large spherical gondola surrounded on all sides by cavorite shutters that could be closed or opened. When Prof. Cavor closed all the shutters facing the ground and opened the shutters facing the moon, the gondola took off for the Moon.

Until today, no cavorite has been discovered. However, recent research in the area of superconductivity, nano materials and quantum state of vacuum, including that of Li, Torr, Podkletnov, and Modanese, has resulted in important new information about the interaction between a gravitational field and special states of matter at a quantum level. This new research opens the possibility of using new electromagnetically-energised superconductive materials allowing stable states of energy, the materials useful not only in controlling the local gravitational fields, but also in creating new gravitomagnetic fields.

BACKGROUND OF INVENTION: OBJECTS AND ADVANTAGES

There are four objects of this invention:

The first object is to provide a method for generating a pressure anomaly of inflationary vacuum state that leads to electromagnetic propulsion.

The second object is to provide a space vehicle capable of electromagnetically-generated propulsion. The implementation of these two objects leads to the development of the space vehicle propelled by gravitational imbalance with gravity pulling, and/or antigravity pushing, the space vehicle forward.

The third object is to provide a method for generating a pressure anomaly of inflationary vacuum state, specifically, the local increase in the level of vacuum pressure density associated with the greater curvature of space-time. The speed of light in such an anomaly would be higher than the speed of light in the ambient space.

The fourth object is to provide the space vehicle capable of generating an unequally-distributed external anomaly all around this vehicle, specifically the anomaly with the elevated level of vacuum pressure density. The anomaly is formed in such a way that gravity pulls the space vehicle forward in the modified space-time at a speed possibly approaching the light-speed specific for this modified locale. If the vacuum pressure density of the locale is modified to be substantially higher than that of the ambient vacuum, the speed of the vehicle could conceivably be higher than the ambient light-speed.

SUMMARY OF THE INVENTION

This invention concerns devices self-propelled by the artificially changed properties of the pressure of inflationary vacuum state to speeds possibly approaching the light-speed specific for this modified locale. Furthermore, this invention concerns devices capable of generating the space-time anomaly characterised by the elevated vacuum pressure density. The devices combining these capabilities may be able to move at speeds substantially higher than the light-speed in the ambient space.

The device of this invention is a space vehicle. The outside shell of the space vehicle is formed by a hollow disk, sphere, or the like hollowed 3-dimensional shape made of a superconductor material, hereinafter a hollow superconductive shield. An inner shield is disposed inside the hollow superconductive shield. The inner shield is provided to protect crew and life-support equipment inside.

A support structure, upper means for generating an electromagnetic field and lower means for generating an electromagnetic field are disposed between the hollow superconductive shield and the inner shield. A flux modulation controller is disposed inside the inner shield to be accessible to the crew.

Electrical energy is generated in a power source disposed inside the hollow superconductive shield. The electrical energy is converted into an electromagnetic field in the upper means for generating an electromagnetic field and the lower means for generating an electromagnetic field.

Electrical motors, also disposed inside the hollow superconductive shield, convert the electrical energy into mechanical energy.

The mechanical energy and the electromagnetic field rotate the hollow superconductive shield, and the upper and the lower means for generating an electromagnetic field, against each other.

The electromagnetic field is converted into a gravitomagnetic field in the hollow superconductive shield.

The gravitomagnetic field, propagated outward, orthogonally to the walls of the hollow superconductive shield, forms a pressure anomaly of inflationary vacuum state in the area of propagation. The pressure anomaly of inflationary vacuum state is comprised of an area of relatively lower vacuum pressure density in front of the space vehicle and an area of relatively higher vacuum pressure density behind the vehicle.

The difference in the vacuum pressure density propels the space vehicle of this invention forward.

BRIEF DESCRIPTION OF THE DRAWINGS

Fig.1 is a cross-sectional view through the front plane taken along the central axis of a space vehicle provided by the method and device of this invention.

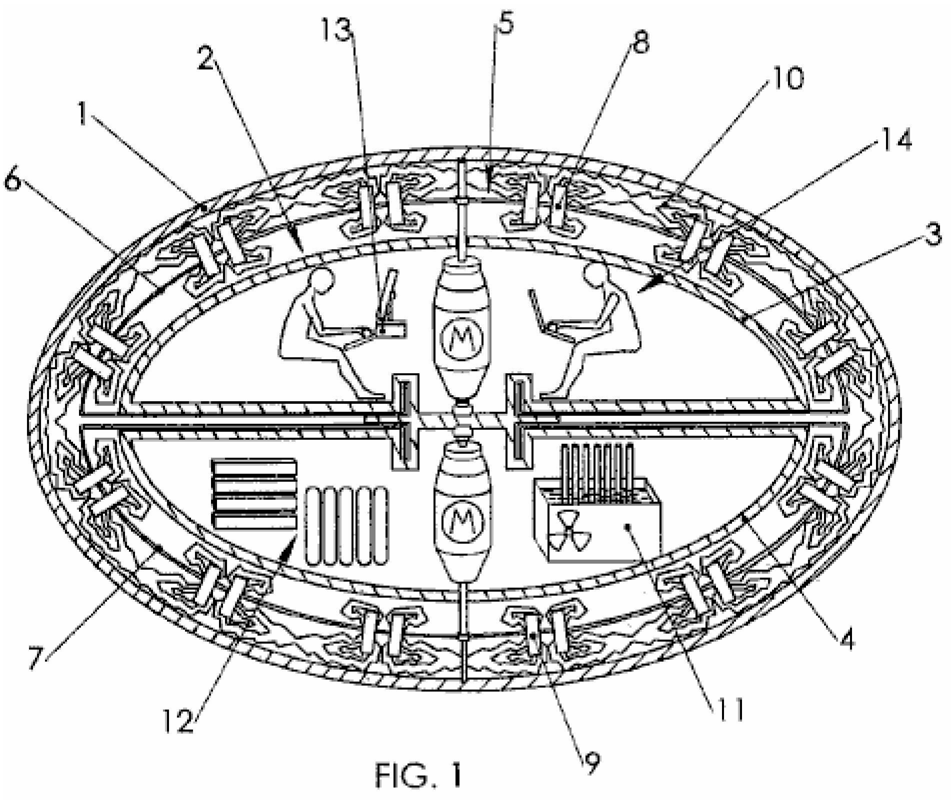

FIG. 1

Fig.2A and **Fig.2B** are diagrams, presented as perspective views, showing some of the physical processes resulting from a dynamic application of an electromagnetic field to a hollow superconductive shield. Only one line of quantised vortices, shown out of scale, is presented for illustration purposes.

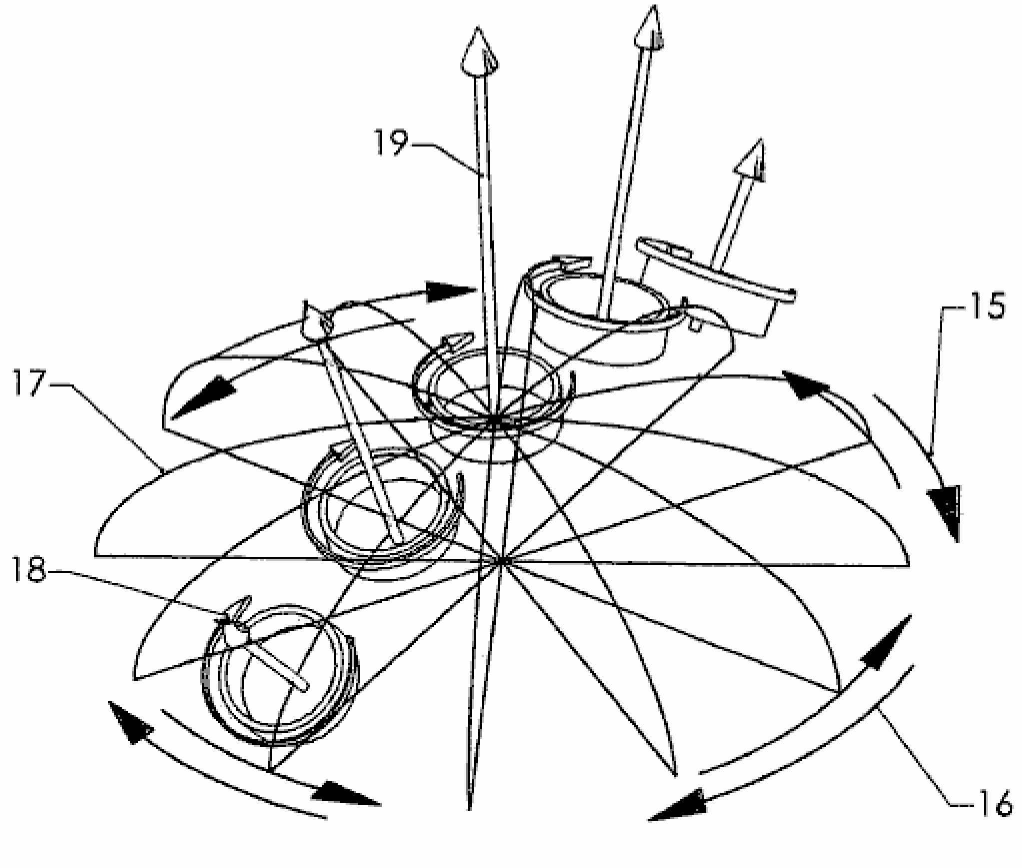

FIG. 2A

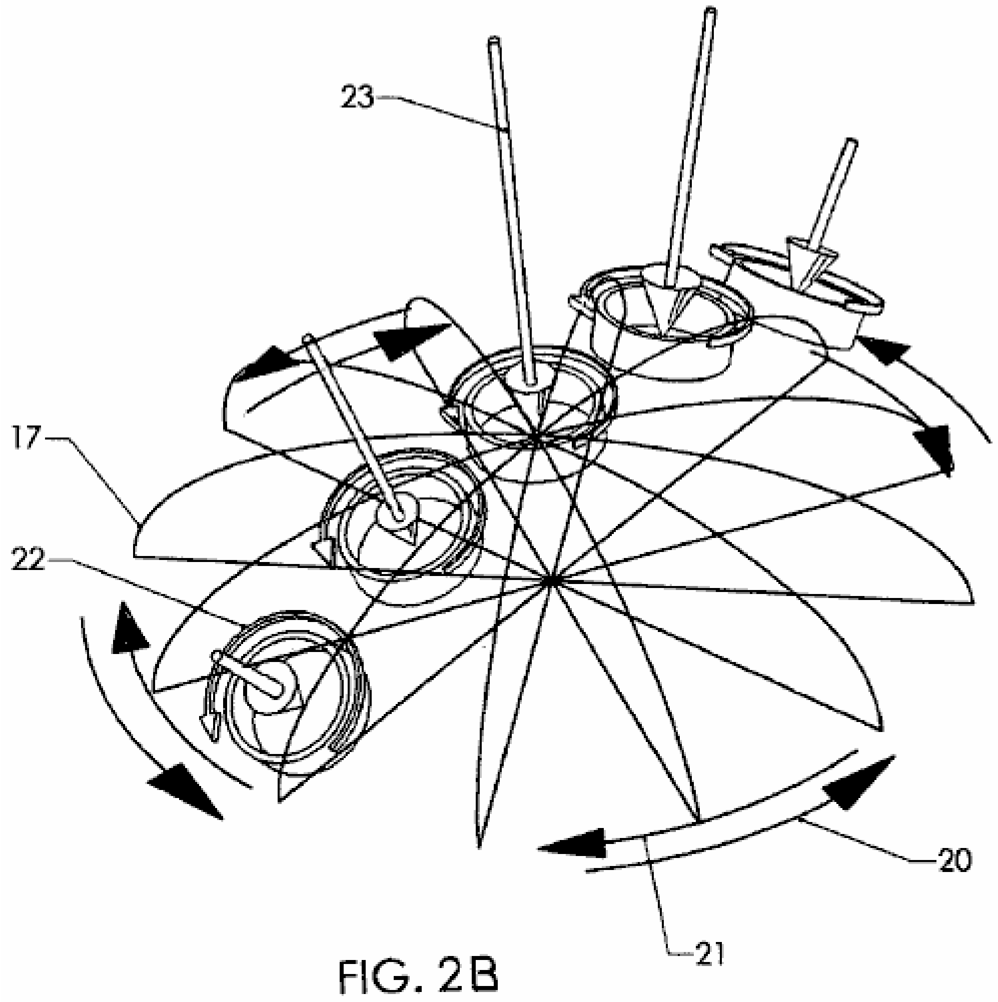

FIG. 2B

Fig.3A and **Fig.3B** are diagrams, presented as perspective views, showing a vacuum pressure density anomaly associated with lowered pressure of inflationary vacuum state and a vacuum pressure density anomaly associated with elevated pressure of inflationary vacuum state, respectively. Both anomalies are shown on the background of Universal curvature of inflationary vacuum state.

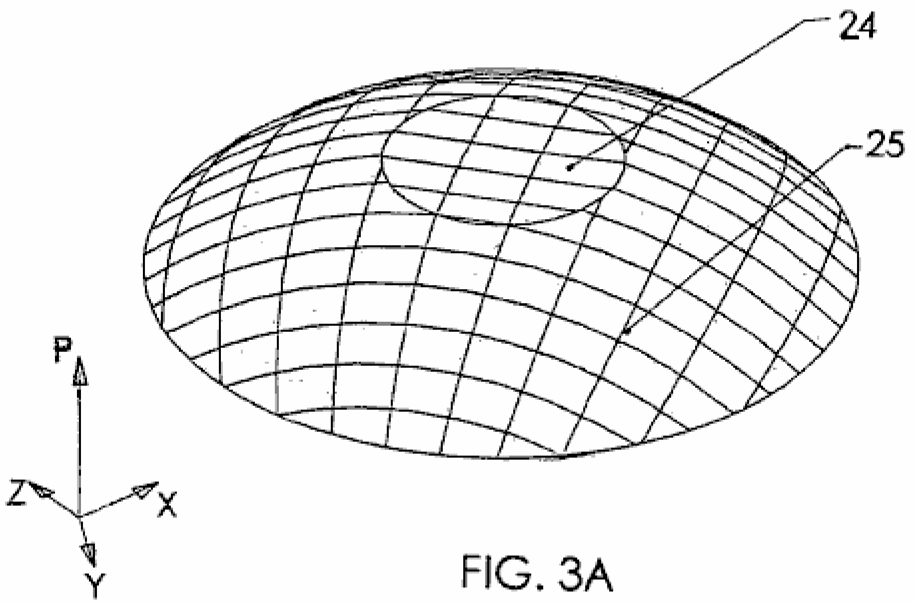

FIG. 3A

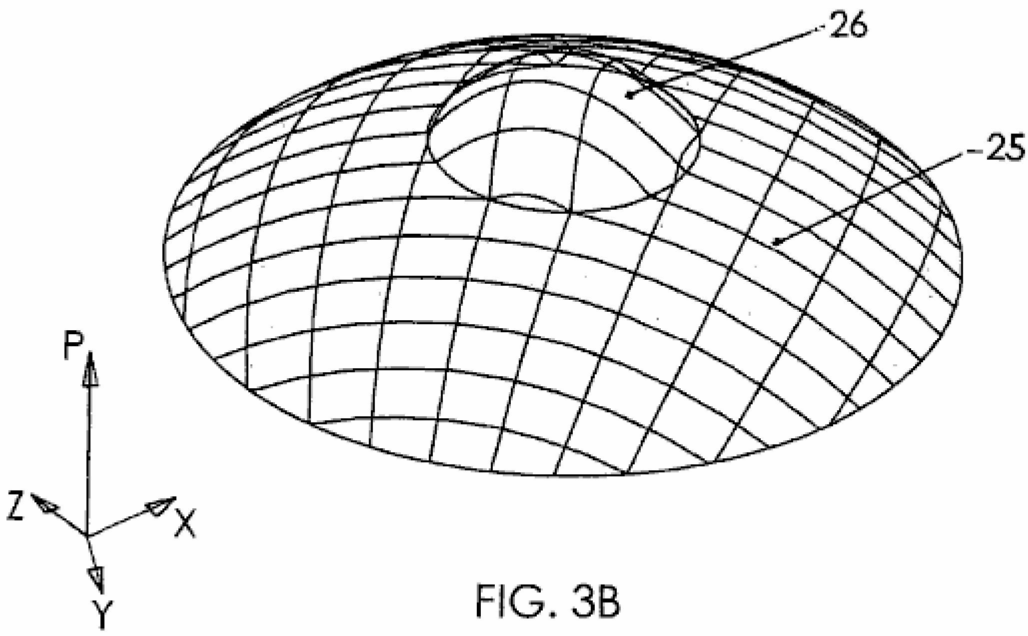

FIG. 3B

Fig.4A and **Fig.4B** are diagrams, presented as perspective views, showing a space-time anomaly associated with lowered pressure of inflationary vacuum state and a space-time anomaly associated with elevated pressure of inflationary vacuum state, respectively. Both anomalies are shown on the background of Universal space-time.

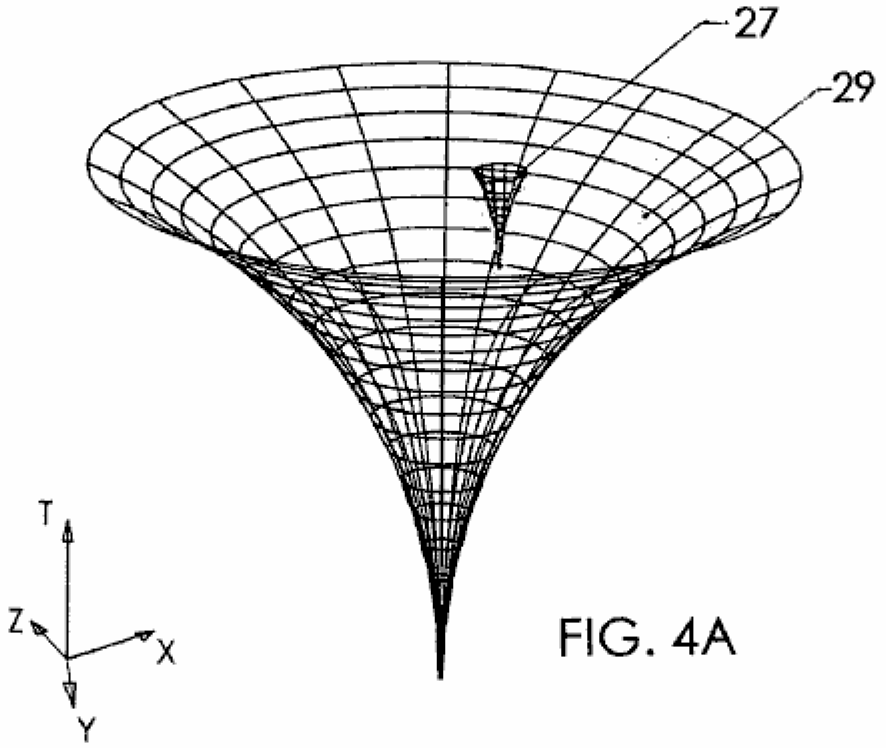

FIG. 4A

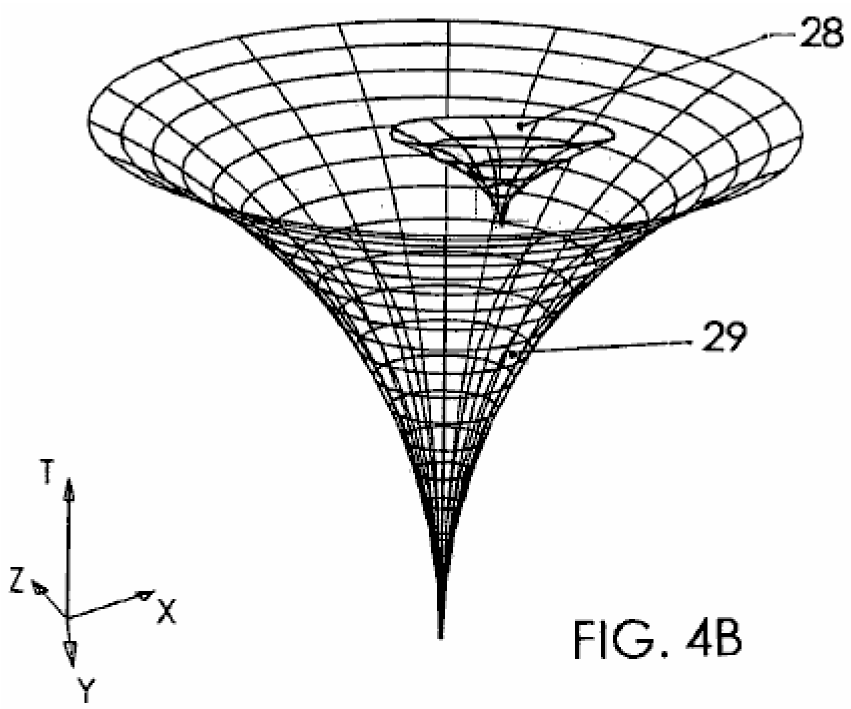

FIG. 4B

Figs.5A, 5B, 6, 7A, & 7B are diagrams of space-time curvature anomalies generated by the space vehicle of the current invention, these anomalies providing for the propulsion of the space vehicle.

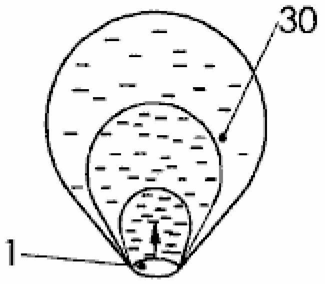

FIG.5A

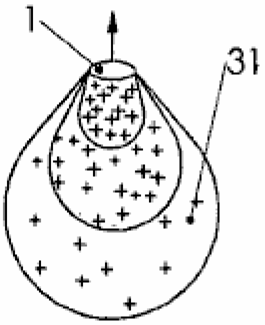

FIG.5B

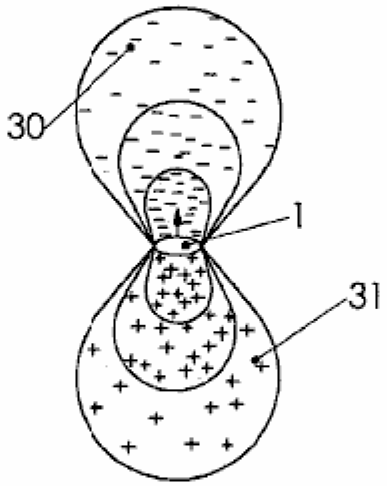

FIG.6

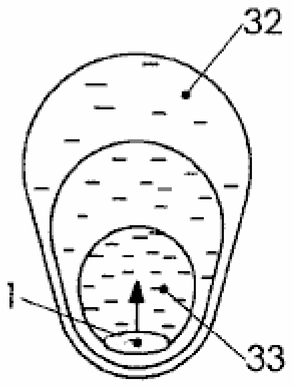

FIG.7A

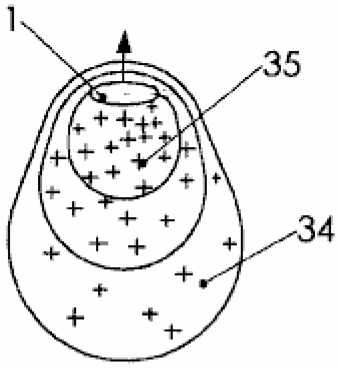

FIG.7B

DRAWINGS—REFERENCE NUMERALS

#1 hollow superconductive shield
#2 inner shield
#3 upper shell
#4 lower shell
#5 support structure
#6 upper rotating element
#7 lower rotating element
#8 upper means for generating an electromagnetic field
#9 lower means for generating an electromagnetic field
#10 flux lines
#11 power source
#12 life-support equipment
#13 flux modulation controller
#14 crew
#15 clockwise shield motion vector
#16 counter-clockwise EMF motion vector
#17 wire grid
#18 clockwise quantised vortices of lattice ions
#19 outward gravitomagnetic field vector
#20 counter-clockwise shield motion vector
#21 clockwise EMF motion vector
#22 counter-clockwise quantised vortices of lattice ions
#23 inward gravitomagnetic field vector
#24 vacuum pressure density anomaly associated with lowered pressure of inflationary vacuum state
#25 Universal curvature of inflationary vacuum state
#26 vacuum pressure density anomaly associated with elevated pressure of inflationary vacuum state
#27 space-time anomaly associated with lowered pressure of inflationary vacuum state
#28 space-time anomaly associated with elevated pressure of inflationary vacuum state
#29 Universal space-time
#30 substantially droplet-shaped space-time curvature anomaly associated with lowered pressure of inflationary vacuum state
#31 substantially droplet-shaped space-time anomaly associated with elevated pressure of inflationary vacuum state
#32 substantially egg-shaped space-time anomaly associated with lowered pressure of inflationary vacuum state
#33 area of the lowest vacuum pressure density
#34 substantially egg-shaped space-time anomaly associated with elevated pressure of inflationary vacuum state
#35 area of the highest vacuum pressure density

DESCRIPTION OF THE PRESENTLY PREFERRED EMBODIMENT

Fig.1 is a cross-sectional view through the front plane taken along the central axis of a space vehicle provided by the method and device of this invention. A hollow superconductive shield 1 forms a protective outer shell of the space vehicle. The hollow superconductive shield 1 may be shaped as a hollow disk, sphere, or the like 3-dimensional geometrical figure formed by the 2-dimensional rotation of a curve around the central axis.

In the preferred embodiment, the hollow superconductive shield 1 is made of a superconductor such as $YBa_2Cu_33O_{7-y}$, or a like high-temperature superconductor with a composite crystal structure cooled to the temperature of about 40^0K. Those skilled in the art may envision the use of many other low and high temperature superconductors, all within the scope of this invention.

An inner shield **2** is disposed inside the hollow superconductive shield **1**. The inner shield **2** is comprised of an upper shell **3** and a lower shell **4**, the shells **3** and **4** adjoined with each other. Executed from insulation materials such as foamed ceramics, the inner shield **2** protects the environment within the shield from the electromagnetic field and severe temperatures.

A support structure **5** is disposed between the hollow superconductive shield **1** and the inner shield **2**, concentric to the hollow superconductive shield. The support structure **5** is comprised of an upper rotating element **6** and a lower rotating element **7**.

The upper rotating element **6** is pivotably disposed inside the hollow superconductive shield **1** and may envelope the upper shell **3**. The lower rotating element **7** is pivotably disposed inside the hollow superconductive shield **1** and may envelope the lower shell **4**. Even though the preferred embodiment has two rotating elements, those skilled in the art may envision only one rotating element, or three or more rotation elements, all within the scope of this invention.

Upper means for generating an electromagnetic field **8** are disposed between the hollow superconductive shield **1** and the upper shell **3**. The upper means for generating an electromagnetic field **8** are fixed to the upper rotating element **6** at an electromagnetic field-penetrable distance to the hollow superconductive shield **1**.

Lower means for generating an electromagnetic field **9** are disposed between the hollow superconductive shield **1** and the lower shell **4**. The lower means for generating an electromagnetic field **9** are fixed to the lower rotating element **7** at an electromagnetic field-penetrable distance to the hollow superconductive shield **1**.

The upper means for generating an electromagnetic field **8** and the lower means for generating an electromagnetic field **9** could be solenoid coils or electromagnets. In the process of operation of the space vehicle, the electromagnetic field identified by flux lines **10**, is controllably and variably applied to the hollow superconductive shield **1**.

Electric motors are disposed inside the hollow superconductive shield along its central axis.

A power source **11** is disposed inside the hollow superconductive shield **1** and may be disposed inside the lower shell **4**. The power source **11** is electrically connected with the upper means for generating an electromagnetic field **8**, the lower means for generating an electromagnetic field **9**, and the electric motors. The upper means for generating an electromagnetic field **8**, the lower means for generating an electromagnetic field **9**, and the electric motors provide for the rotation of the upper rotating element **6** and the lower rotating element **7**. The power source **11** may be a nuclear power generator.

Life-support equipment **12** is disposed inside the inner shield **2**, and may be disposed inside the lower shell **4**. The life-support equipment **12** may include oxygen, water, and food.

A flux modulation controller **13** is disposed inside the inner shield **2**, and may be disposed inside the upper shell **3**. The flux modulation controller **13** is in communication with the upper means for generating an electromagnetic field **8**, the lower means for generating an electromagnetic field **9**, the power source **11**, and the electric motors.

The flux modulation controller **8** may be executed as a computer or a microprocessor. The flux modulation controller **8** is provided with a capability of modulating the performance parameters of the upper means for generating an electromagnetic field **8**, the lower means for generating an electromagnetic field **9**, the power source **11**, and the electric motors.

A crew **14** may be located inside the upper shell **3** of the inner shield **2** and may consist of one or more astronauts. The crew has a free access to the life-support equipment **12** and the flux modulation controller **8**. A person skilled in the art, may envision a fully-automated, pilotless craft, which is also within the scope of this invention.

A person skilled in the art, may also envision the embodiment (not shown), also within the scope of this invention, where the hollow superconductive shield is pivotable, and the support structure with the means for generating an electromagnetic field is affixed on the outside of the inner shield.

Fig.2A and **Fig.2B** are diagrams showing the results of the quantised electromagnetic turbulence within the superconductive shell of the hollow superconductive shield provided by the relative rotational motion of the hollow superconductive shield against the upper means for generating an electromagnetic field.

Fig.2A shows the clockwise relative rotational motion of the hollow superconductive shield, this motion identified by a clockwise shield motion vector **15**, and the counter-clockwise relative rotational motion of upper means for generating an electromagnetic field, this motion identified by a counter-clockwise EMF motion vector **16**.

The electromagnetic field, controllably and variably applied by the upper means for generating an electromagnetic field, whose various positions are identified by a wire grid **17**, to the hollow superconductive shield (not shown), causes quantised electromagnetic turbulence within the hollow superconductive shield. This turbulence is represented by a plurality of clockwise quantised vortices of lattice ions **18**. Only one line of the clockwise quantised vortices of lattice ions **18**, (not to scale), is shown for illustration purposes only. Each of the clockwise quantised vortices of lattice ions **18** generates a gravitomagnetic field identified by an outward gravitomagnetic field vector **19** directed orthogonally away from the hollow superconductive shield.

Fig.2B shows the counter-clockwise relative rotational motion of the hollow superconductive shield, this motion identified by a counter-clockwise shield motion vector **20**, and the clockwise relative rotational motion of upper means for generating an electromagnetic field, this motion identified by a clockwise EMF motion vector **21**.

The electromagnetic field, controllably and variably applied by the upper means for generating an electromagnetic field identified by the wire grid **17**, to the hollow superconductive shield (not shown), causes quantised electromagnetic turbulence within the hollow superconductive shield, this turbulence represented by a plurality of counter-clockwise quantised vortices of lattice ions **22**. Only one line of the counter-clockwise quantised vortices of lattice ions **22**, (not to scale), is shown for illustration purposes only. Each of the counter-clockwise quantised vortices of lattice ions **22** generates a gravitomagnetic field identified by an inward gravitomagnetic field vector **23** directed orthogonally toward the hollow superconductive shield.

The electrical requirements for providing the Li-Torr effect are as follows:

Podkletnov has reported using the high frequency current of 105 Hz. He also used 6 solenoid coils @ 850 Gauss each. The reported system's efficiency reached 100% and the total field in the Podkletnov's disk was about 0.5 Tesla. The maximum weight loss reported by Podkletnov was 2.1%.

The preferred embodiment of the device of current invention is capable of housing 2-3 astronauts and therefore is envisioned to be about 5 meters in diameter at the widest point. The preferred space vehicle's acceleration is set at 9.8 m/s/s providing that gravity on board is similar to that on the surface of Earth.

The means for generating an electromagnetic field may be comprised of 124 solenoid coils. At the same 100% efficiency reported by Podkletnov, the total field required providing the acceleration of 9.8 m/s/s is 5,000 Tesla, or about 40 Tesla per coil. Skeggs suggests that on the Podkletnov device, out of 850 Gauss developed on the coil surface, the field affecting the superconductor and causing the gravitomagnetism is only 400 Gauss ("Engineering Analysis of the Podkletnov Gravity Shielding Experiment, Peter L. Skeggs, Quantum Forum, Nov. 7, 1997, http://www.inetarena.com/˜noetic/pls/podlev.html, 7 pages). This translates into 47% device efficiency.

In this 47%-efficient space vehicle, the total field required achieving the 9.8 m/s/s acceleration is about 10,600 Tesla, or 85.5 Tesla per each of 124 solenoid coils. It must be noted that at this acceleration rate, it would take nearly a year for the space vehicle to reach the speed of light.

It also must be noted that Skeggs has detected a discrepancy between the Li-Torr estimates and Podkletnov's practical results. If Podkletnov's experimental results are erroneous while the Li-Torr estimates are indeed applicable to the space vehicle of this invention, then the energy requirements for achieving the sought speed would be substantially higher than the above estimate of 10,600 Tesla.

Podkletnov has concluded that, in order for the vacuum pressure density anomaly to take place, the Earth-bound device must be in the condition of Meissner levitation. As are all space bodies, the space vehicle is a subject to the pressure inflationary vacuum state and the gravitational force, which, within the migrating locality of the expanding Universe, in any single linear direction, are substantially in equilibrium. Thus, for the space vehicle, the requirement of Meissner levitation is waved.

The propagation of the gravitomagnetic field identified by the outward gravitomagnetic field vector **19** and the inward gravitomagnetic field vector **23** would cause exotic quantised processes in the vacuum's subatomic particles that include particle polarisation, ZPF field defects, and the matter-energy transformation per $E=mc^2$. The combination of these processes would result in the gravitational anomaly. According to the general relativity theory, gravitational attraction is explained as the result of the curvature of space-time being proportional to the gravitational constant. Thus, the change in the gravitational attraction of the vacuum's subatomic particles would cause a local anomaly in the curvature of the Einsteinean space-time.

Gravity is the same thing as bent space, propagating with the speed of light characteristic for the particular space-time curvature. When bent space is affected, there is a change in the speed of propagation of gravity within the space-time curvature anomaly. The local speed of light, according to Fomalont and Kopeikin always equal to the local speed of propagation of gravity, is also affected within the locality of space-time curvature anomaly.

Creation of space-time curvature anomalies adjacent to, or around, the space vehicle, these anomalies characterised by the local gravity and light-speed change, has been the main object of this invention.

Fig.3A shows a diagram of a vacuum pressure density anomaly associated with lowered pressure of inflationary vacuum state **24** on the background of Universal curvature of inflationary vacuum state **25**. The vacuum pressure density anomaly associated with lowered pressure of inflationary vacuum state **24** is formed by a multitude of the inward gravitomagnetic field vectors. According to the cosmological constant equation,

ρ_Λ: $\Lambda=(8\pi G/3c^2)\rho_\Lambda$

where:
The cosmological constant Lambda, is proportional to the vacuum energy pressure rho-lambda, G is Newton's constant of gravitation, and c is the speed of light, so the curvature of space-time is proportional to the gravitational constant. According to the general relativity theory, the change in the vacuum pressure density is proportional to the change in the space-time curvature anomaly. By replacing rho-lambda with the vacuum pressure density, P times the vacuum energy coefficient kappa, and replacing c with:
delta-distance/delta-time, we derive to the equation:

$$\Lambda=[8\pi G/3(\Delta\text{distance}/\Delta\text{time})^2]P_\kappa$$

and can now construct a vacuum pressure density curvature diagram.

The vacuum pressure density curvature anomaly associated with lowered pressure of inflationary vacuum state **24** is shown here as a flattened surface representing the lowered pressure of the inflationary vacuum state. This anomaly is the result of the exotic quantised processes in the subatomic particles caused by the quantised turbulence occurring in the hollow superconductive shield. The XYZ axes represent three dimensions of space and the P axis represents the vacuum pressure density.

Fig.3B shows a diagram of a vacuum pressure density anomaly associated with elevated pressure of inflationary vacuum state **26** on the background of the Universal curvature of inflationary vacuum state **25**. The vacuum pressure density anomaly associated with elevated pressure of inflationary vacuum state **26** is formed by a multitude of the outward gravitomagnetic field vectors. The anomaly is shown here as a convex surface representing the elevated pressure of inflationary vacuum state. The diagrams of **Fig.3A** and **Fig.3B** are not to scale with the anomaly sizes being exaggerated for clarity.

Fig.4A and **Fig.4B** show diagrams of a space-time anomaly associated with lowered pressure of inflationary vacuum state **27**, and a space-time anomaly associated with elevated pressure of inflationary vacuum state **28**, respectively, each on the background a diagram of Universal space-time **29**.

The quaterised Julia set $Q_{n+1} = Q_n^2 + C_0$ is assumed to be an accurate mathematical representation of the Universal space-time. The generic quaternion Q_0 belongs to the Julia set associated with the quaternion C, and n tends to infinity. If we assume that the quaternion value C_0 is associated with the Universal space-time **29**, C_1 is the value of quaternion C for the space-time anomaly associated with lowered pressure of inflationary vacuum state **27**, and C_2 is the value of quaternion C for the space-time anomaly associated with elevated pressure of inflationary vacuum state **28**, then we can construct two diagrams.

The diagram of **Fig.4A** shows the space-time anomaly associated with lowered pressure of inflationary vacuum state **27** as a quaterised Julia set contained in a 4-dimensional space: $Q_{n+1} = Q_n^2 + C_1$ on the background of the Universal space-time **29** represented by $Q_{n+1} = Q_n^2 + C_0$.

The diagram of **Fig.4B** shows the space-time anomaly associated with elevated pressure of inflationary vacuum state **28** as a quaterised Julia set $Q_{n+1} = Q_n^2 + C_2$, also on the background of the Universal space-time **29** represented by $Q_{n+1} = Q_n^2 + C_0$. On both diagrams, the XYZ axes represent three dimensions of space, and the T axis represents time. The diagrams are not to scale: the anomaly sizes are exaggerated for clarity, and the halves of quaterised Julia sets, conventionally associated with the hypothetical Anti-Universe, are omitted.

Figs. 5A, 5B, 6, 7A, & 7B show simplified diagrams of space-time curvature anomalies generated by the space vehicle of the current invention, these anomalies providing for the propulsion of the space vehicle. In each case, the pressure anomaly of inflationary vacuum state is comprised of an area of relatively lower vacuum pressure density in front of the space vehicle and an area of relatively higher vacuum pressure density behind the space vehicle. Because the lower pressure of inflationary vacuum state is associated with greater gravity and the higher pressure is associated with the higher repulsive force, the space vehicle is urged to move from the area of relatively higher vacuum pressure density toward the area of relatively lower vacuum pressure density.

Fig.5A illustrates the first example of space-time curvature modification. This example shows a substantially droplet-shaped space-time curvature anomaly associated with lowered pressure of inflationary vacuum state **30** adjacent to the hollow superconductive shield **1** of the space vehicle. The anomaly **30** is provided by the propagation of a gravitomagnetic field radiating orthogonally away from the front of the hollow superconductive shield **1**. This gravitomagnetic field may be provided by the relative clockwise motion of the upper means for generating an electromagnetic field, and relative counterclockwise motion of the hollow superconductive field, as observed from above the space vehicle.

In this example, the difference between the space-time curvature within the substantially droplet-shaped space-time anomaly associated with lowered pressure of inflationary vacuum state, and the ambient space-time curvature, the space-time curvature being the same as gravity, results in the gravitational imbalance, with gravity pulling the space vehicle forward.

Fig.5B illustrates the second example of space-time curvature modification. This example shows a substantially droplet-shaped space-time anomaly associated with elevated pressure of inflationary vacuum state **31** adjacent to the hollow superconductive shield **1** of the space vehicle. The anomaly **31** is provided by the propagation of a gravitomagnetic field radiating orthogonally away from the back of the hollow superconductive shield. This gravitomagnetic field may be provided by the relative counter-clockwise motion of the lower means for generating an electromagnetic field, and relative clockwise motion of the hollow superconductive field, as observed from below the space vehicle.

In this example, the difference between the space-time curvature within the substantially droplet-shaped space-time anomaly associated with elevated pressure of inflationary vacuum state, and the ambient space-time curvature, the space-time curvature being the same as gravity, results in the gravitational imbalance, with the repulsion force pushing the space vehicle forward.

Fig.6 illustrates the third example of space-time curvature modification. This example shows the formation of the substantially droplet-shaped space-time anomaly associated with lowered pressure of inflationary vacuum state **30** combined with the substantially droplet-shaped space-time anomaly associated with elevated pressure of inflationary vacuum state **31**. This combination of anomalies may be provided by the relative clockwise motion of the upper means for generating an electromagnetic field and relative clockwise motion of the hollow superconductive field, combined with the relative clockwise motion of the lower means for generating an electromagnetic field, as observed from above the space vehicle.

In this example, the difference between the space-time curvature within the substantially droplet-shaped space-time anomaly associated with lowered pressure of inflationary vacuum state, and the space-time curvature of the substantially droplet-shaped space-time anomaly associated with elevated pressure of inflationary vacuum state, the space-time curvature being the same as gravity, results in the gravitational imbalance, with gravity pulling, and the repulsion force pushing, the space vehicle forward.

Fig.7A illustrates the fourth example of space-time curvature modification. This example shows the formation of a substantially egg-shaped space-time anomaly associated with lowered pressure of inflationary vacuum state **32** around the hollow superconductive shield **1** of the space vehicle. The anomaly **32** is provided by the propagation of gravitomagnetic field of unequally-distributed density, this gravitomagnetic field radiating in all directions orthogonally away from the hollow superconductive shield. The propagation of the unequally-distributed gravitomagnetic field leads to the similarly unequally-distributed space-time curvature anomaly. This unequally-distributed gravitomagnetic field may be provided by the relatively faster clockwise motion of the upper means for generating an electromagnetic field relative to the hollow superconductive field, combined with the relatively slower counter-clockwise motion of the lower means for generating an electromagnetic field, as observed from above the space vehicle.

An area of the lowest vacuum pressure density **33** of the substantially egg-shaped space-time anomaly associated with lowered pressure of inflationary vacuum state **32** is located directly in front of the space vehicle.

In this example, the variation in the space-time curvature within the substantially egg-shaped space-time anomaly associated with lowered pressure of inflationary vacuum state, the space-time curvature being the same as gravity, results in a gravitational imbalance, with gravity pulling the space vehicle forward in modified space-time.

Fig.7B illustrates the fifth example of space-time curvature modification, also with the purpose of providing for a propulsion in modified space-time. This example shows the formation of a substantially egg-shaped space-time anomaly associated with elevated pressure of inflationary vacuum state **34** around the hollow superconductive shield 1 of the space vehicle. The anomaly **34** is provided by the propagation of gravitomagnetic field of unequally-distributed density, this gravitomagnetic field radiating in all directions orthogonally away from the hollow superconductive shield. The propagation of the unequally-distributed gravitomagnetic field leads to the similarly unequally-distributed space-time curvature anomaly. This unequally-distributed gravitomagnetic field may be provided by the relatively slower counter-clockwise motion of the upper means for generating an electromagnetic field relative to the hollow superconductive field, combined with the relatively faster clockwise motion of the lower means for generating an electromagnetic field, as observed from above the space vehicle.

An area of the highest vacuum pressure density **35** of the substantially egg-shaped space-time anomaly associated with elevated pressure of inflationary vacuum state **34** is located directly behind the space vehicle.

In this example, the variation in the space-time curvature within the substantially egg-shaped space-time anomaly associated with elevated pressure of inflationary vacuum state, the space-time curvature being same as gravity, results in a gravitational imbalance, with the repulsion force pushing the space vehicle forward in modified space-time at speeds approaching the light-speed characteristic for this modified area. This light-speed might be much higher than the light-speed in the ambient space.

By creating alternative anomalies and modulating their parameters, the space vehicle's crew would dilate and contract time and space on demand. The space vehicle, emitting a vacuum pressure modifying, controllably-modulated gravitomagnetic field in all directions, would rapidly move in the uneven space-time anomaly it created, pulled forward by gravity or pushed by the repulsion force. The time rate zone of the anomaly is expected to have multiple quantised boundaries rather than a single sudden boundary affecting space and time in the immediate proximity of the vehicle. Speed, rate of time, and direction in space could be shifted on demand and in a rapid manner. The modulated light-speed could make the space vehicle suitable for interstellar travel. Because of the time rate control in the newly created isospace, the accelerations would be gradual and the angles of deviation would be relatively smooth. The gravity shielding would further protect pilots from the ill-effects of gravity during rapid accelerations, directional changes, and sudden stops.

****

If you find the thought of generating a gravitational field, difficult to come to terms with, then consider the work of Henry Wallace who was an engineer at General Electric about 25 years ago, and who developed some incredible inventions relating to the underlying physics of the gravitational field. Few people have heard of him or his work. Wallace discovered that a force field, similar or related to the gravitational field, results from the interaction of relatively moving masses. He built machines which demonstrated that this field could be generated by spinning masses of elemental material having an odd number of nucleons -- i.e. a nucleus having a multiple half-integral value of h-bar, the quantum of angular momentum. Wallace used bismuth or copper material for his rotating bodies and "kinnemassic" field concentrators.

Aside from the immense benefits to humanity which could result from a better understanding of the physical nature of gravity, and other fundamental forces, Wallace's inventions could have enormous practical value in countering gravity or converting gravitational force fields into energy for doing useful work. So, why has no one heard of him? One might think that the discoverer of important knowledge such as this would be heralded as a great scientist and nominated for dynamite prizes. Could it be that his invention does not work? Anyone can get the patents. Study them -- Wallace -- General Electric -- detailed descriptions of operations -- measurements of effects -- drawings and models -- it is authentic. If you are handy with tools, then you can even build it yourself. It does work.

Henry was granted two patents in this field:
US Patent #3626605 -- "Method and Apparatus for Generating a Secondary Gravitational Force Field", Dec 14, 1971 and

US Patent #3626606 -- "Method and Apparatus for Generating a Dynamic Force Field", Dec 14, 1971. He was also granted US Patent #3823570 -- "Heat Pump" (based on technology similar to the above two inventions), July 16, 1973.

These patents can be accessed via http://www.freepatentsonline.com

The First High MPG Carburettor of Charles Pogue

US Patent 642,434 12th November 1932 Inventor: Charles N. Pogue

CARBURETTOR

This patent describes a carburettor design which was able to produce very high mpg figures using the gasoline available in the USA in the 1930s but which is no longer available as the oil industry does not want functional high mpg carburettors to be available to the public.

DESCRIPTION

This invention relates to a device for obtaining an intimate contact between a liquid in a vaporous state and a gas, and particularly to such a device which may serve as a carburettor for internal combustion engines.

Carburettors commonly used for supplying a combustible mixture of air and liquid fuel to internal combustion engines, comprise a bowl in which a supply of the fuel is maintained in the liquid phase and a fuel jet which extends from the liquid fuel into a passage through which air is drawn by the suction of the engine cylinders. On the suction, or intake stroke of the cylinders, air is drawn over and around the fuel jet and a charge of liquid fuel is drawn in, broken up and partially vaporised during its passage to the engine cylinders. However, I have found that in such carburettors, a relatively large amount of the atomised liquid fuel is not vaporised and enters the engine cylinder in the form of microscopic droplets. When such a charge is ignited in the engine cylinder, only that portion of the liquid fuel which has been converted into the vaporous (molecular) state, combines with the air to give an explosive mixture. The remaining portion of the liquid fuel which is drawn into the engine cylinders and remains in the form of small droplets, does not explode and impart power to the engine, but burns with a flame and raises the temperature of the engine above that at which the engine operates most efficiently, i.e. 160^{O} to 180^{O} F.

According to this invention, a carburettor for internal combustion engines is provided in which substantially all of the liquid fuel entering the engine cylinder will be in the vapour phase and consequently, capable of combining with the air to form a mixture which will explode and impart a maximum amount of power to the engine, and which will not burn and unduly raise the temperature of the engine.

A mixture of air and liquid fuel in truly vapour phase in the engine cylinder is obtained by vaporising all, or a large portion of the liquid fuel before it is introduced into the intake manifold of the engine. This is preferably done in a vaporising chamber, and the "dry" vaporous fuel is drawn from the top of this chamber into the intake manifold on the intake or suction stroke of the engine. The term "dry" used here refers to the fuel in the vaporous phase which is at least substantially free from droplets of the fuel in the liquid phase, which on ignition would burn rather than explode.

More particularly, the invention comprises a carburettor embodying a vaporising chamber in the bottom of which, a constant body of liquid fuel is maintained, and in the top of which there is always maintained a supply of "dry" vaporised fuel, ready for admission into the intake manifold of the engine. The supply of vaporised liquid fuel is maintained by drawing air through the supply of liquid fuel in the bottom of the vaporising chamber, and by constantly atomising a portion of the liquid fuel so that it may more readily pass into the vapour phase. This is preferably accomplished by a double-acting suction pump operated from the intake manifold, which forces a mixture of the liquid fuel and air against a plate located within the chamber. To obtain a more complete vaporisation of the liquid fuel, the vaporising chamber and the incoming air are preferably heated by the exhaust gasses from the engine. The carburettor also includes means for initially supplying a mixture of air and vaporised fuel so that starting the engine will not be dependent on the existence of a supply of fuel vapours in the vaporising chamber.

The invention will be further described in connection with the accompanying drawings, but this further disclosure and description is to be taken as an exemplification of the invention and the same is not limited thereby except as is pointed out in the claims.

Fig.1 is an elevational view of a carburettor embodying my invention.

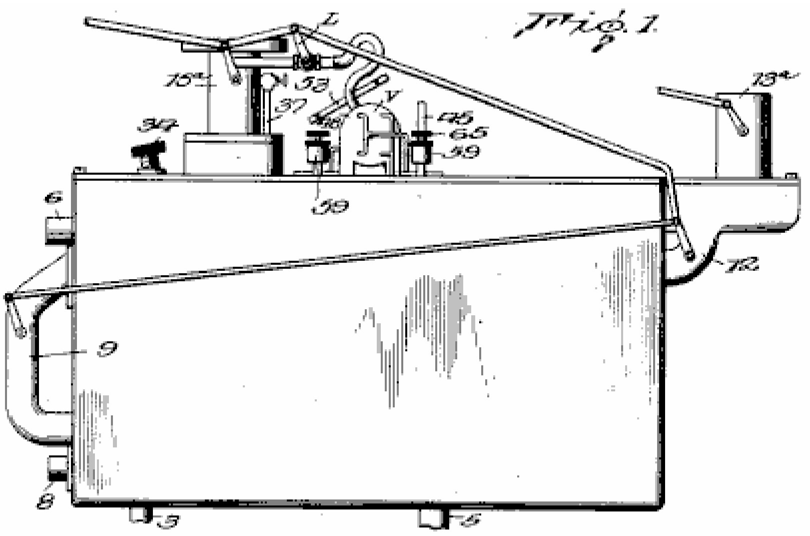

Fig.2 is a vertical cross-sectional view through the centre of Fig.1

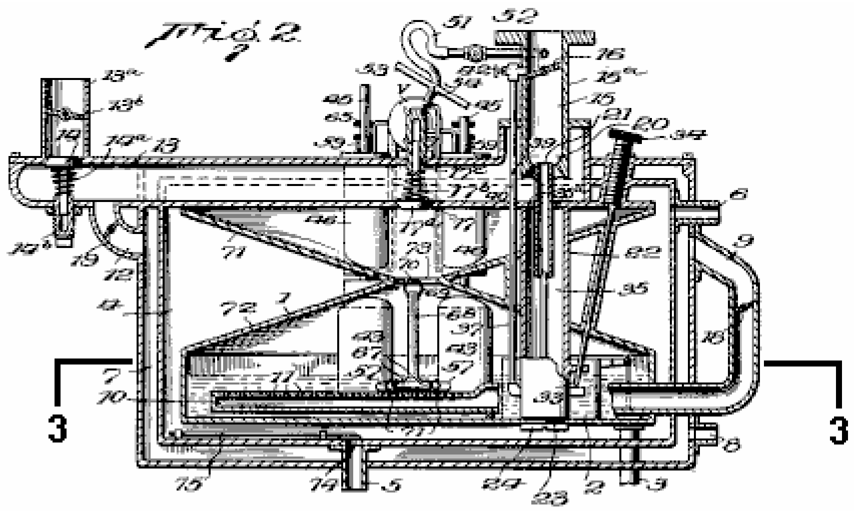

Fig.3 is a horizontal sectional view on line 3--3 of Fig.2.

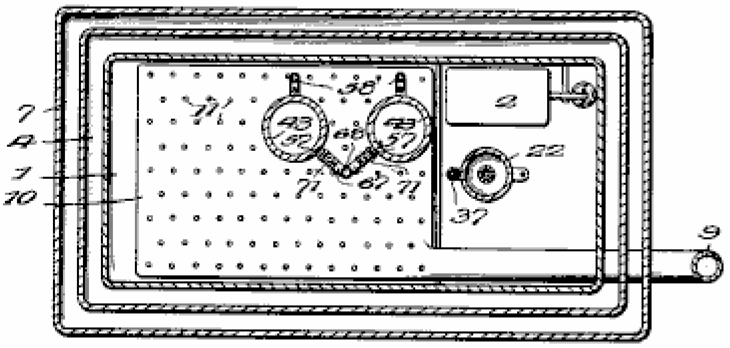

Fig. 3.

Fig.4 is an enlarged vertical sectional view through one of the pump cylinders and adjacent parts of the carburettor.

Fig. 4.

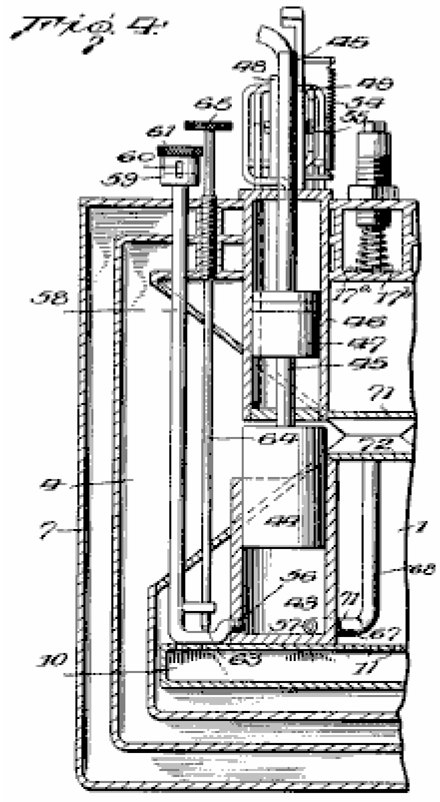

Fig.5 is an enlarged view through the complete double-acting pump and showing the associated distributing valve.

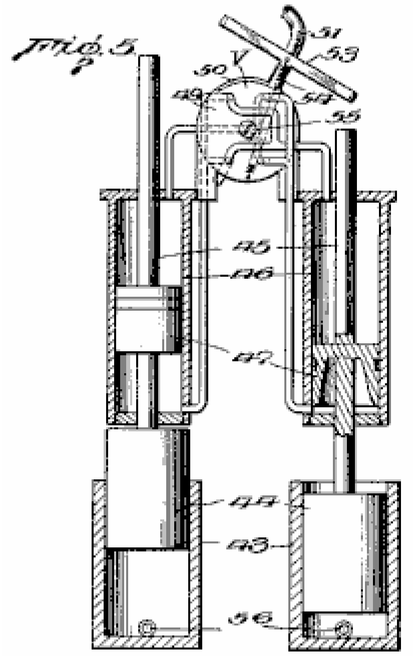

Fig.6 is an enlarged vertical sectional view through the atomising nozzle for supplying a starting charge for the engine.

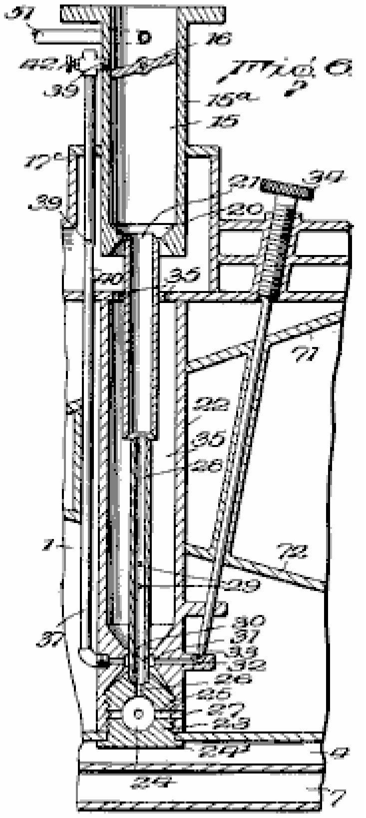

Fig.7 and Fig.8 are detail sectional views of parts 16 and 22 of Fig.6

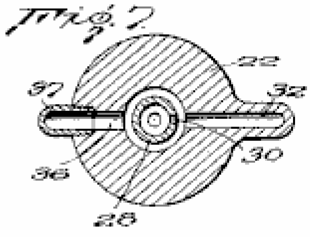

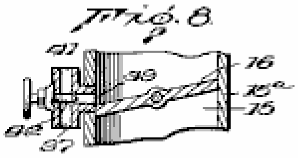

Fig.9 and Fig.10 are detail sectional views showing the inlet and outlet to the cylinders of the atomising pump.

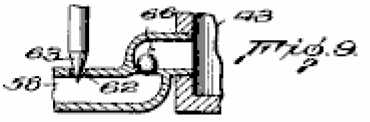

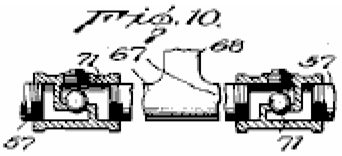

Referring to the drawings, the numeral **1** indicates a combined vaporising chamber and fuel bowl in which liquid fuel is maintained at the level indicated in **Fig.1** by a float-valve **2** controlling the flow of liquid fuel through pipe **3** which leads from the vacuum tank or other liquid fuel reservoir.

The vaporising chamber **1** is surrounded by a chamber **4** through which hot exhaust gasses from the engine, enter through pipe **5** located at the bottom of the chamber. These gasses pass around the vaporising chamber **1** and heat the chamber, which accelerates the vaporisation of the liquid fuel. The gasses then pass out through the upper outlet pipe **6**.

Chamber **4** for the hot exhaust gasses, is in turn surrounded by chamber **7** into which air for vaporising part of the liquid fuel in chamber **1** enters through a lower intake pipe **8**. This air passes upwards through chamber **4** through which the hot exhaust gasses pass, and so the air becomes heated. A portion of the heated air then passes though pipe **9** into an aerator **10**, located in the bottom of the vaporising chamber **1** and submerged in the liquid fuel in it. The aerator **10** is comprised of a relatively flat chamber which extends over a substantial portion of the bottom of the chamber and has a large number of small orifices **11** in its upper wall. The heated air entering the aerator passes through the orifices **11** as small bubbles which then pass upwards through the liquid fuel. These bubbles, together with the heat imparted to the vaporising chamber by the hot exhaust gasses, cause a vaporisation of a portion of the liquid fuel.

Another portion of the air from chamber **7** passes through a connection **12** into passage **13**, through which air is drawn directly from the atmosphere into the intake manifold. Passage **13** is provided with a valve **14** which is normally held closed by spring **14a**, the tension of which may be adjusted by means of the threaded plug **14b**. Passage **13** has an upward extension **13a**, in which is located a choke valve **13b** for assisting in starting the engine. Passage **13** passes through the vaporising chamber **1** and has its inner end communicating with passage **15** via connector **15a** which is secured to the intake manifold of the engine. Passage **15** is provided with the usual butterfly valve **16** which controls the amount of fuel admitted to the engine cylinders, and consequently, regulates the speed of the engine.

The portion of passage **13** which passes through the vaporising chamber has an opening **17** normally closed by valve **17a** which is held against its seat by spring **17b**, the tension of which may be adjusted by a threaded plug **17c**. As air is drawn past valve **14** and through passage **13** on the intake or suction stroke of the engine, valve **17a** will be lifted from its seat and a portion of the dry fuel vapour from the upper portion of the vaporising chamber will be sucked into passage **13** through opening **17** and mingle with the air in it before entering passage **15**.

In order to regulate the amount of air passing from chamber **7** to aerator **10** and into passage **13**, pipe **9** and connection **12** are provided with suitable valves **18** and **19** respectively. Valve **18** in pipe **9** is synchronised with butterfly valve **16** in passage **15**. Valve **19** is adjustable and preferably synchronised with butterfly valve **16** as shown, but this is not essential.

The bottom of passage **15** is made in the form of a venturi **20** and a nozzle **21** for atomised liquid fuel and air is located at or adjacent to the point of greatest restriction. Nozzle **21** is preferably supplied with fuel from the supply of liquid fuel in the bottom of the vaporising chamber, and to that end, a member 22 is secured within the vaporising chamber by a removable threaded plug **23** having a flanged lower end **24**. Plug **22** extends through an opening in the bottom of chamber **1**, and is threaded into the bottom of member **22**. This causes the bottom wall of chamber **1** to be securely clamped between the lower end of member **22** and flange **24**, thus securely retaining member **22** in place.

Plug **23** is provided with a sediment bowl **24** and extending from bowl **24** are several small passages **25** extending laterally, and a central vertical passage **26**. The lateral passages **25** register with corresponding passages **27** located in the lower end of member **22** at a level lower than that at which fuel stands in chamber **1**, whereby liquid fuel is free to pass into bowl **24**.

Vertical passage **26** communicates with a vertical nozzle **28** which terminates within the flaring lower end of nozzle **21**. The external diameter of nozzle **26** is less than the interior diameter of the nozzle **21** so that a space is provided between them for the passage of air or and vapour mixtures. Nozzle **26** is also provided with a series of inlets **29**, for air or air and vapour mixtures, and a fuel inlet **30**. Fuel inlet **30** communicates with a chamber **31** located in the member **22** and surrounding the nozzle **28.** Chamber **30** is supplied with liquid fuel by means of a passage **32** which is controlled by a needle valve **33**, the stem of which, extends to the outside of the carburettor and is provided with a knurled nut **34** for adjusting purposes.

The upper end of member **22** is made hollow to provide a space **35** surrounding the nozzles **21** and **28**. The lower wall of the passage **13** is provided with a series of openings **35a**, to allow vapours to enter space **35** through them. The vapours may then pass through inlets **29** into the nozzle **28**, and around the upper end of the nozzle **28** into the lower end of nozzle **21**.

Extending from chamber **31** at the side opposite passage **32**, is a passage **36** which communicates with a conduit **37** which extends upwards through passage **13**, and connects through a lateral extension **39**, with passage **15** just above the butterfly valve **16**. The portion of conduit **37** which extends through passage **13** is provided with an orifice **39** through which air or air and fuel vapour may be drawn into the conduit **37** mingle with and atomise the liquid fuel being drawn through the conduit. To further assist in this atomisation of the liquid fuel passing through conduit **37**, the conduit is restricted at **40** just below orifice **39**.

The upper end of conduit **37** is in communication with the atmosphere through opening **41** through which air may be drawn directly into the upper portion of the conduit. The proportion of air to combustible vapours coming through conduit **37** is controlled by needle valve **42**.

As nozzle **21** enters directly into the lower end of passage **15**, suction in the inlet manifold will, in turn, create a suction on nozzle **21** which will cause a mixture of atomised fuel and air to be drawn directly into the intake manifold. This is found to be desirable when starting the engine, particularly in cold weather, when there might not be an adequate supply of vapour in the vaporising chamber , or the mixture of air and vapour passing through passage **13** might be to “lean” to cause a prompt starting of the engine. At such times, closing the choke valve **13b** will cause the maximum suction to be exerted on nozzle **21** and the maximum amount of air and atomised fuel to be drawn directly into the intake manifold. After the engine has been started, only a small portion of the combustible air and vapour mixture necessary for proper operation of the engine is drawn through nozzle **21** as the choke valve will then be open to a greater extent and substantially all of the air and vapour mixture necessary for operation of the engine will be drawn through the lower end **20** of passage **15**, around nozzle **21**.

Conduit **37** extending from fuel chamber **31** to a point above butterfly valve **16** provides an adequate supply of fuel when the engine is idling with vale **16** closed or nearly closed.

The casings forming chambers **1**, **4** and **7**, will be provided with the necessary openings, to subsequently be closed, so that the various parts may be assembled, and subsequently adjusted or repaired.

The intake stroke of the engine creates a suction in the intake manifold, which in turn causes air to be drawn past spring valve **14** into passage **13** and simultaneously a portion of the dry fuel vapour from the top of vaporising chamber **1** is drawn through opening **17** past valve **17a** to mix with the air moving through the passage. This mixture then passes through passage **15** to the intake manifold and engine cylinders.

The drawing of the dry fuel vapour into passage **13** creates a partial vacuum in chamber **1** which causes air to be drawn into chamber **7** around heated chamber **4** from where it passes through connection **12** and valve **19**, into passage **13** and through pipe **9** and valve **18** into aerator **10**, from which it bubbles up through the liquid fuel in the bottom of chamber **1** to vaporise more liquid fuel.

To assist in maintaining a supply of dry fuel vapour in the upper portion of vaporising chamber **1**, the carburettor is provided with means for atomising a portion of the liquid fuel in vaporising chamber **1**. This atomising means preferably is comprised of a double-acting pump which is operated by the suction existing in the intake manifold of the engine.

The double-acting pump is comprised of a pair of cylinders **43** which have their lower ends located in the vaporising chamber **1**, and each of which has a reciprocating pump piston **44** mounted in it. Pistons **44** have rods **45** extending from their upper ends, passing through cylinders **46** and have pistons **47** mounted on them within the cylinders **46**.

Cylinders **46** are connected at each end to a distributing valve **V** which connects the cylinders alternately to the intake manifold so that the suction in the manifold will cause the two pistons **44** to operate as a double-acting suction pump.

The distributing valve **V** is comprised of a pair of discs **48** and **49** between which is located a hollow oscillatable chamber **50** which is constantly subjected to the suction existing in the intake manifold through connection **51** having a valve **52** in it. Chamber **50** has a pair of upper openings and a pair of lower openings. These openings are so arranged with respect to the conduits leading to the opposite ends of cylinders **46** that the suction of the engine simultaneously forces one piston **47** upwards while forcing the other one downwards.

The oscillatable chamber **50** has a T-shaped extension **53**. The arms of this extension are engaged alternately by the upper ends of the piston rods 45, so as to cause valve **V** to connect cylinders **46** in sequence to the intake manifold.

Spring **54** causes a quick opening and closing of the ports leading to the cylinders **46** so that at no time will the suction of the engine be exerted on both of the pistons **47**. The tension between discs **48** and **49** and the oscillatable chamber **50** may be regulated by screw **55**.

The particular form of the distributing valve **V** is not claimed here so a further description of operation is not necessary. As far as the present invention is concerned, any form of means for imparting movement to pistons **47** may be substituted for the valve **V** and its associated parts.

The cylinders **43** are each provided with inlets and outlets **56** and **57**, each located below the fuel level in chamber **1**. The inlets **56** are connected to horizontally and upwardly extending conduits **58** which pass through the carburettor to the outside. The upper ends of these conduits are enlarged at **59** and are provided with a vertically extending slot **60**. The enlarged ends **59** are threaded on the inside to accept plugs **61**. The position of these plugs with respect to slots **60** determines the amount of air which may pass through the slots **60** and into cylinder **43** on the suction stroke of the pistons **44**.

The upper walls of the horizontal portions of conduits **58** have an opening **62** for the passage of liquid fuel from chamber **1**. The extent to which liquid fuel may pass through these openings is controlled by needle valves **63**, whose stems **64** pass up through and out of the carburettor and terminate in knurled adjusting nuts **65**.

The horizontal portion of each conduit **58** is also provided with a check valve **66** (shown in **Fig.10**) which allows air to be drawn into the cylinders through conduits **58** but prevents liquid fuel from being forced upwards through the conduits on the down stroke of pistons **44**.

Outlets **57** connect with horizontal pipes **67** which merge into a single open-ended pipe **68** which extends upwards. The upper open end of this pipe terminates about half way up the height of the vaporising chamber **1** and is provided with a bail **69** which carries a deflecting plate **70** positioned directly over the open end of pipe **68**.

The horizontal pipes **67** are provided with check valves **71** which permit the mingled air and fuel to be forced from cylinders **43** by the pistons **44**, but which prevent fuel vapour from being drawn from chamber **1** into cylinders **43**.

When operating, pistons **44** on the ‘up’ strokes, draw a charge of air and liquid fuel into cylinders **43**, and on the ‘down’ stroke, discharge the charge in an atomised condition through pipes **67** and **68**, against deflecting plate **70** which further atomises the particles of liquid fuel so that they will readily vaporise. Any portions of the liquid fuel which do not vaporise, drop down into the supply of liquid fuel in the bottom of the vaporising chamber where they are subjected to the vaporising influence of the bubbles of heated air coming from the aerator **10**, and may again pass into the cylinders **43**.

As previously stated, the vaporised fuel for introduction into the intake manifold of the engine, is taken from the upper portion of the vaporising chamber **1**. To ensure that the vapour in this portion of the chamber shall contain no, or substantially no, entrained droplets of liquid fuel, chamber **1** is divided into upper and lower portions by the walls **71** and **72** which converge from all directions to form a central opening **73**. With the vaporising chamber thus divided into upper and lower portions which are connected only by the relatively small opening **73**, any droplets entrained by the bubbles rising from the aerator **10**, will come into contact with the sloping wall **72** and be deflected back into the main body of liquid fuel in the bottom of the chamber. Likewise, the droplets of atomised fuel being forced from the upper end of pipe **68** will, on striking plate **70**, be deflected back into the body of liquid fuel and not pass into the upper portion of the chamber.

In order that the speed of operation of the atomising pump may be governed by the speed at which the engine is running, and further, that the amount of air admitted from chamber **7** to the aerator **10**, and to passage **13** through connection **12**, may be increased as the speed of the engine increases, the valves **18**, **19** and **52** and butterfly valve **16** are all connected by a suitable linkage **L** so that as butterfly valve **16** is opened to increase the speed of the engine, valves **18**, **19** and **52** will also be opened.

As shown in **Fig.2**, the passage of the exhaust gasses from the engine to the heating chamber **4**, located between the vaporising chamber and the air chamber **7**, is controlled by valve **74**. The opening and closing of valve **74** is controlled by a thermostat in accordance with the temperature inside chamber **4**, by means of an adjustable metal rod 75 having a high coefficient of expansion, whereby the optimum temperature may be maintained in the vaporising chamber, irrespective of the surrounding temperature.

From the foregoing description, it will be understood that the present invention provides a carburettor for supplying to internal combustion engines, a comingled mixture of air and liquid fuel vapour free from microscopic droplets of liquid fuel which would burn rather than explode in the cylinders and that a supply of such dry vaporised fuel is constantly maintained in the carburettor.

The Second High MPG Carburettor of Charles Pogue

US Patent 1,997,497 9th April 1935 Inventor: Charles N. Pogue

CARBURETTOR

This patent describes a carburettor design which was able to produce very high mpg figures using the gasoline available in the USA in the 1930s but which is no longer available as the oil industry does not want functional high mpg carburettors to be available to the public.

DESCRIPTION

This invention relates to a device for obtaining an intimate contact between a liquid in a truly vaporous state and a gas, and particularly to such a device which may serve as a carburettor for internal combustion engines and is an improvement on the form of device shown in my Patent No. 1,938,497, granted on 5th December 1933.

In carburettors commonly used for supplying a combustible mixture of air and liquid fuel to internal combustion engines, a relatively large amount of the atomised liquid fuel is not vaporised and enters the engine cylinder more or less in the form of microscopic droplets. When such a charge is ignited in the engine cylinder, only that portion of the liquid fuel which has been converted into the vaporous, and consequently molecular state, combines with the air to give an explosive mixture. The remaining portion of the liquid fuel which is drawn into the engine cylinders remains in the form of small droplets and does not explode imparting power to the engine, but instead burns with a flame and raises the engine temperature above that at which the engine operates most efficiently, i.e. from 160^{O} F. to 180^{O} F.

In my earlier patent, there is shown and described a form of carburettor in which the liquid fuel is substantially completely vaporised prior to its introduction into the engine cylinders, and in which, means are provided for maintaining a reverse supply of “dry” vapour available for introduction into the engine cylinder. Such a carburettor has been found superior to the standard type of carburettor referred to above, and to give a better engine performance with far less consumption of fuel.

It is an object of the present invention to provide a carburettor in which the liquid fuel is broken up and prepared in advance of and independent of the suction of the engine and in which a reserve supply of dry vapour will be maintained under pressure, ready for introduction into the engine cylinder at all times. It is also an object of the invention to provide a carburettor in which the dry vapour is heated to a sufficient extent prior to being mixed with the main supply of air which carries it into the engine cylinder, to cause it to expand so that it will be relatively lighter and will become more intimately mixed with the air, prior to explosion in the engine cylinders.

I have found that when the reserve supply of dry vapour is heated and expanded prior to being mixed with the air, a greater proportion of the potential energy of the fuel is obtained and the mixture of air and fuel vapour will explode in the engine cylinders without any apparent burning of the fuel which would result in unduly raising the operating temperature of the engine.

More particularly, the present invention comprises a carburettor in which liquid fuel vapour is passed from a main vaporising chamber under at least a slight pressure, into and through a heated chamber where it is caused to expand and in which droplets of liquid fuel are either vaporised or separated from the vapour , so that the fuel finally introduced into the engine cylinders is in the true vapour phase. The chamber in which the liquid fuel vapour is heated and caused to expand, is preferably comprised of a series of passages through which the vapour and exhaust gases from the engine pass in tortuous paths in such a manner that the exhaust gasses are brought into heat interchange relation with the vapour and give up a part of their heat to the vapour, thus causing heating and expansion of the vapour.

The invention will be further described in connection with the accompanying drawings, but this further disclosure and description is to be taken merely as an exemplification of the invention and the invention is not limited to the embodiment so described.

DESCRIPTION OF THE DRAWINGS

Fig.1 is a vertical cross-sectional view through a carburettor embodying my invention.

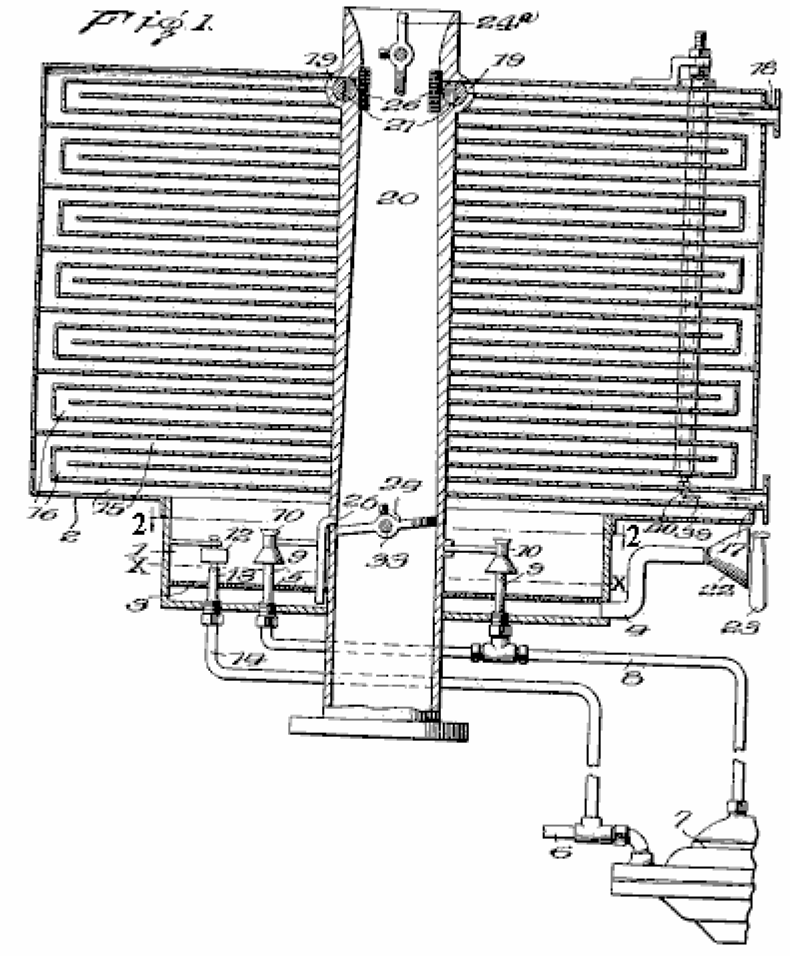

Fig.2 is a horizontal sectional view through the main vaporising or atomising chamber, taken on line 2--2 of Fig.1

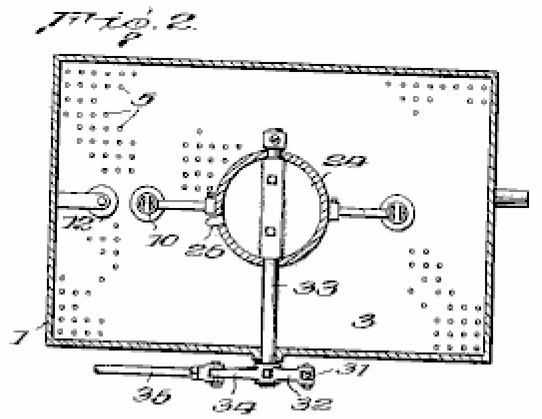

Fig.3 is a side elevation of the carburettor.

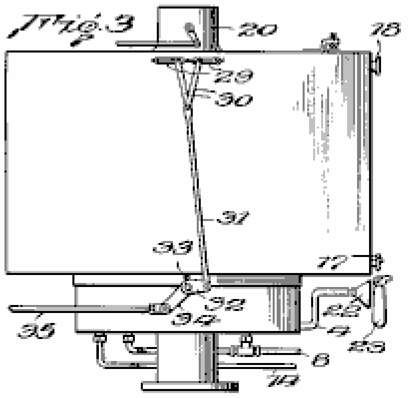

Fig.4 is a detail sectional view of one of the atomising nozzles and its associated parts

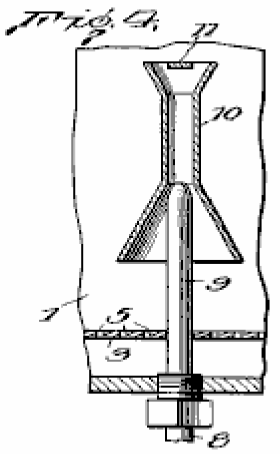

Fig.5 is a detail cross-sectional view showing the means for controlling the passage of gasses from the vapour expanding chamber into the intake manifold of the engine.

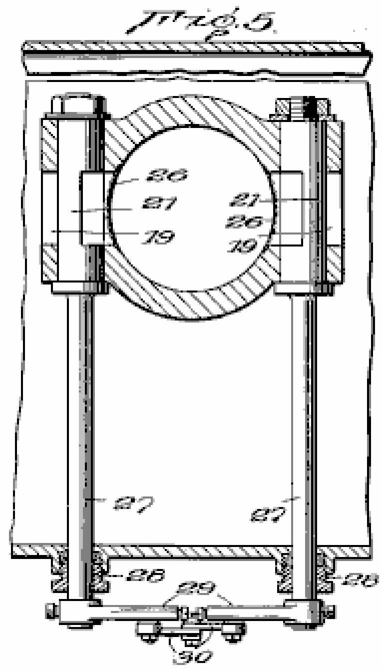

Fig.6 is a perspective view of one of the valves shown in Fig.5

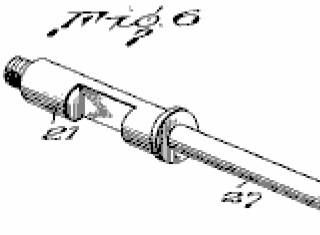

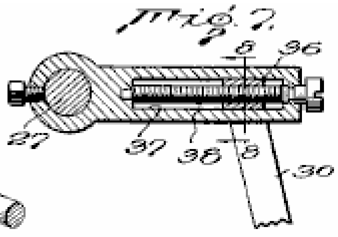

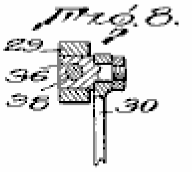

Fig.7 is a cross-sectional view showing means for adjusting the valves shown in Fig.5

Fig.8 is a cross-sectional view on line 8--8 of Fig.7

Referring now to the drawings, the numeral **1** indicates a main vaporising and atomising chamber for the liquid fuel located at the bottom of, and communicating with, a vapour heating and expanding chamber **2**.

The vaporising chamber is provided with a perforated false bottom **3** and is normally filled with liquid fuel to the level **x**. Air enters the space below the false bottom **3** via conduit **4** and passes upwards through perforations **5** in the false bottom and then bubbles up through the liquid fuel, vaporising a portion of it.

To maintain the fuel level **x** in chamber **1**, liquid fuel passes from the usual fuel tank (not shown) through pipe **8** into and through a pair of nozzles **9** which have their outlets located in chamber **1**, just above the level of the liquid fuel in it. The pump **7** may be of any approved form but is preferably of the diaphragm type, as such fuel pumps are now standard equipment on most cars.

The nozzles **9** are externally threaded at their lower ends to facilitate their assembly in chamber **1** and to permit them to be removed readily, should cleaning be necessary.

The upper ends of nozzles **9** are surrounded by venturi tubes **10**, having a baffle **11**, located at their upper ends opposite the outlets of the nozzles. The liquid fuel being forced from the ends of nozzles **9** into the restricted portions of the Venturi tubes, causes a rapid circulation of the air and vapour in the chamber through the tubes **10** and brings the air and vapour into intimate contact with the liquid fuel, with the result that a portion of the liquid fuel is vaporised. The part of the liquid fuel which is not vaporised, strikes the baffles **11** and is further broken up and deflected downwards into the upward-flowing current of air and vapour.

Pump **7** is regulated to supply a greater amount of liquid fuel to the nozzles **9** than will be vaporised. The excess drops into chamber **1** and causes the liquid to be maintained at the indicated level. When the liquid fuel rises above that level, a float valve **12** is lifted, allowing the excess fuel to flow out through overflow pipe **13** into pipe **14** which leads back to pipe **6** on the intake side of pump **7**. Such an arrangement allows a large amount of liquid fuel to be circulated by pump **7** without more fuel being withdrawn from the fuel tank than is actually vaporised and consumed in the engine. As the float valve **12** will set upon the end of the outlet pipe **13** as soon as the liquid level drops below the indicated level, there is no danger of vapour passing into pipe **14** and from there into pump **7** and interfere with its normal operation.

The upper end of the vaporising and atomising chamber **1** is open and vapour formed by air bubbling through the liquid fuel in the bottom of the chamber and that formed as the result of atomisation at nozzles **9**, pass into the heating and expanding chamber **2**. As is clearly shown in **Fig.1**, chamber **2** comprises a series of tortuous passages **15** and **16** leading from the bottom to the top. The fuel vapour passes through passages **15** and the exhaust gasses of the engine pass through passages **16**, a suitable entrance **17** and exit **18** being provided for that purpose.

The vapour passing upwards in a zigzag path through passages **15**, will be brought into heat interchange relation with the hot walls of the passages **16** traversed by the hot exhaust gasses. The total length of the passages **15** and **16** is such that a relatively large reserve supply of the liquid fuel is always maintained in chamber **2**, and by maintaining the vapour in heat interchange relation with the hot exhaust gasses for a substantial period, the vapour will absorb sufficient heat to cause it to expand, with the result that when it is withdrawn from the top of chamber 2, it will be in the true vapour phase, and due to expansion, relatively light.

Any minute droplets of liquid fuel entrained by the vapour in chamber **1** will precipitate out in the lower passages **15** and flow back into chamber **1**, or else be vaporised by the heat absorbed from the exhaust gasses during its passage through chamber **2**.

The upper end of vapour passage **15** communicates with openings **19** adjacent to the upper end of a down-draft air tube **20** leading to the intake manifold of the engine. Valves **21** are interposed in openings **19**, so that the passage of the vapour through them into the air tube may be controlled. Valves **21** are preferably of the rotary plug type and are controlled as described below.

Suitable means are provided for causing the vapour to be maintained in chamber **2,** under a pressure greater than atmospheric, so that when the valves **21** are opened, the vapour will be forced into air tube **20** independent of the engine suction. Such means may comprise an air pump (not shown) for forcing air through pipe **4** into chamber **1** beneath the false bottom **3**, but I prefer merely to provide pipe 4 with a funnel-shaped inlet end **22** and placement just behind the usual engine fan **23**. This causes air to pass through pipe **4** with sufficient force to maintain the desired pressure in chamber **2**, and the air being drawn through the radiator by the fan will be preheated prior to its introduction into chamber **1** and hence will vaporise greater amounts of the liquid fuel. If desired, pipe **4** may be surrounded by an electric or other heater, or exhaust gasses from the engine may be passed around it to further preheat the air passing through it prior to its introduction into the liquid fuel in the bottom of chamber **1**.

Air tube **20** is provided with a butterfly throttle valve **24** and a choke valve **24a**, as is customary with carburettors used for internal combustion engines. The upper end of air tube **20** extends above chamber **2** a distance sufficient to receive an air filter and/or silencer, if desired.

A low-speed or idling jet **25** has its upper end communicating with the passage through air tube **20** adjacent to the throttling valve **24** and its lower end extending into the liquid fuel in the bottom of chamber **1,** for supplying fuel to the engine when the valves are in a position such as to close the passages **19**. However, the passage through idling jet **25** is so small that under normal operations, the suction on it is not sufficient to lift fuel from the bottom of chamber **1**.

To prevent the engine from backfiring into vapour chamber **2**, the ends of the passages **19** are covered with a fine mesh screen **26** which, operating on the principle of the miner's lamp, will prevent the vapour in chamber **2** from exploding in case of a backfire, but which will not interfere substantially with the passage of the vapour from chamber **2** into air tube **20** when valves **21** are open. Air tube **20** is preferably in the form of a venturi with the greatest restriction being at that point where the openings **19** are located, so that when valves **21** are opened, there will be a pulling force on the vapour caused by the increased velocity of the air at the restricted portion of air tube **20** opposite the openings **19**, as well as an expelling force on them due to the pressure in chamber **2**.

As shown in **Fig.3**, the operating mechanism of valves **21** is connected to the operating mechanism for throttle valve **24**, so that they are opened and closed simultaneously with the opening and closing of the throttle valve, ensuring that the amount of vapour supplied to the engine will, at all times, be in proportion to the demands placed upon the engine. To that end, each valve **21** has an extension, or operating stem **27**, protruding through one of the side walls of the vapour-heating and expanding chamber **2**. Packing glands **28** of ordinary construction, surround stems **27** where they pass through the chamber wall, to prevent leakage of vapour at those points.

Operating arms **29** are rigidly secured to the outer ends of stems **27** and extend towards each other. The arms are pivotally and adjustably connected to a pair of links **30** which, at their lower ends are pivotally connected to an operating link **31**, which in turn, is pivotally connected to arm **32** which is rigidly secured on an outer extension **33** of the stem of the throttle valve **24**. Extension **33** also has rigidly connected to it, arm **34** to which is connected operating link **35** leading from the means for accelerating the engine.

The means for adjusting the connection from the upper ends of links **30** to valve stems **27** of valves **21**, so that the amount of vapour delivered from chamber 2 may be regulated to cause the most efficient operation of the particular engine to which the carburettor is attached, comprises angular slides **36**, to which the upper ends of links **30** are fastened, and which cannot rotate but can slide in guideways **37** located in arms **29**. Slides **36** have threaded holes through which screws **38** pass. Screws **38** are rotatably mounted in arms **29**, but are held against longitudinal movement so that when they are rotated, slides **36** will be caused to move along the guideways **37** and change the relative position of links **30** to the valve stems **27**, so that a greater or less movement, and consequently, a greater or less opening of the ports **19** will take place when throttle valve **24** is operated.

For safety, and for most efficient operation of the engine, the vapour in chamber **2** should not be heated or expanded beyond a predetermined amount, and in order to control the extent to which the vapour is heated, and consequently, the extent to which it expands, a valve **39** is located in the exhaust passage **16** adjacent to inlet **17**. Valve **39** is preferably theromstatically controlled, as for example, by an expanding rod thermostat **40**, which extends through chamber **2**. However, any other means may be provided for reducing the amount of hot exhaust gasses entering passage **16** when the temperature of the vapour in the chamber reaches or exceeds the optimum.

The carburettor has been described in detail in connection with a down-draft type of carburettor, but it is to be understood that its usefulness is not to be restricted to that particular type of carburettor, and that the manner in which the mixture of air and vapour is introduced into the engine cylinders is immaterial as far as the advantages of the carburettor are concerned.

The term "dry vapour" is used to define the physical condition of the liquid fuel vapour after removal of liquid droplets or the mist which is frequently entrained in what is ordinarily termed a vapour.

From the foregoing description it will be seen that the present invention provides a carburettor in which the breaking up of the liquid fuel for subsequent use is independent of the suction created by the engine, and that after the liquid fuel is broken up, it is maintained under pressure in a heated space for a length of time sufficient to permit all entrained liquid particles to be separated or vaporised and to permit the dry vapour to expand prior to its introduction into and admixture with the main volume of air passing into the engine cylinders.

The Third High MPG Carburettor of Charles Pogue

US Patent 2,026,798 7th January 1936 Inventor: Charles N. Pogue

CARBURETTOR

This patent describes a carburettor design which was able to produce very high mpg figures using the gasoline available in the USA in the 1930s but which is no longer available as the oil industry does not want functional high mpg carburettors to be available to the public.

DESCRIPTION

This invention relates to carburettors suitable for use with internal combustion engines and is an improvement on the carburettors shown in my Patents Nos. 1,938,497, granted on 5th December 1933 and 1,997,497 granted on 9th April 1935.

In my earlier patents, an intimate contact between such as the fuel used for internal combustion engines, and a gas such as air, is obtained by causing the gas to bubble up through a body of the liquid. The vaporised liquid passes into a vapour chamber which preferably is heated, and any liquid droplets are returned to the body of the liquid, with the result that the fuel introduced into the combustion chambers is free of liquid particles , and in the molecular state so that an intimate mixture with the air is obtained to give an explosive mixture from which nearer the maximum energy contained in the liquid fuel is obtained. Moreover, as there are no liquid particles introduced into the combustion chambers, there will be no burning of the fuel and consequently, the temperature of the engine will not be increased above that at which it operates most efficiently.

In my Patent No. 1,997,497, the air which is to bubble up through the body of the liquid fuel is forced into and through the fuel under pressure and the fuel vapour and air pass into a chamber where they are heated and caused to expand. The introduction of the air under pressure and the expansion of the vaporous mixture ensures a sufficient pressure being maintained in the vapour heating and expanding chamber, to cause at least a portion of it to be expelled from it into the intake manifold as soon as the valve controlling the passage to it is opened.

In accordance with the present invention, improved means are provided for maintaining the vaporous mixture in the vapour-heating chamber under a predetermined pressure, and for regulating such pressure so that it will be at the optimum for the particular conditions under which the engine is to operate. Such means preferably comprises a reciprocating pump operated by a vacuum-actuated motor for forcing the vapour into and through the chamber. The pump is provided with a suitable pressure-regulating valve so that when the pressure in the vapour-heating chamber exceeds the predetermined amount, a portion of the vapour mixture will be by-passed from the outlet side to the inlet side of the pump, and so be recirculated.

The invention will be described further in connection with the accompanying drawings, but such further disclosure and description is to be taken merely as an exemplification of the invention, and the invention is not limited to that embodiment of the invention.

DESCRIPTION OF THE DRAWINGS

Fig.1 is a side elevation of a carburettor embodying the invention.

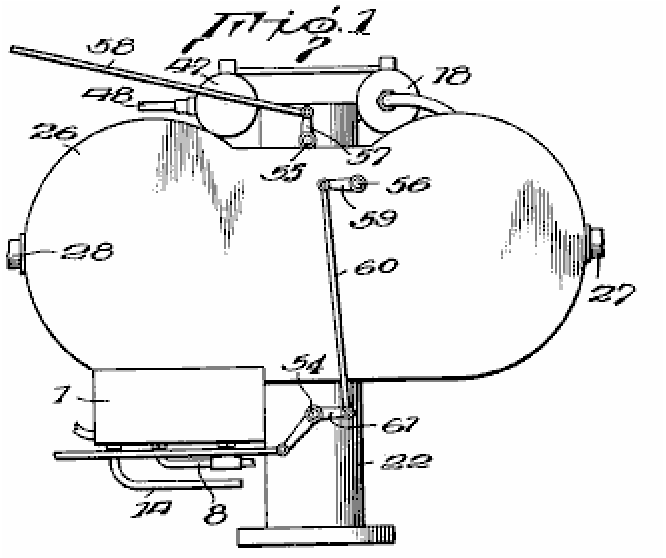

Fig.2 is a plan view of the carburettor

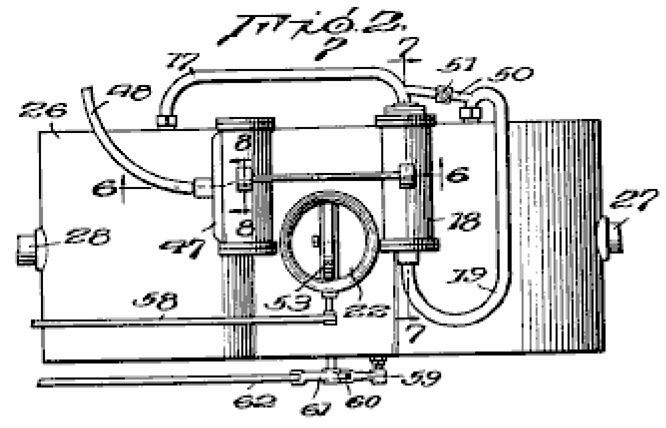

Fig.3 is an enlarged vertical section view.

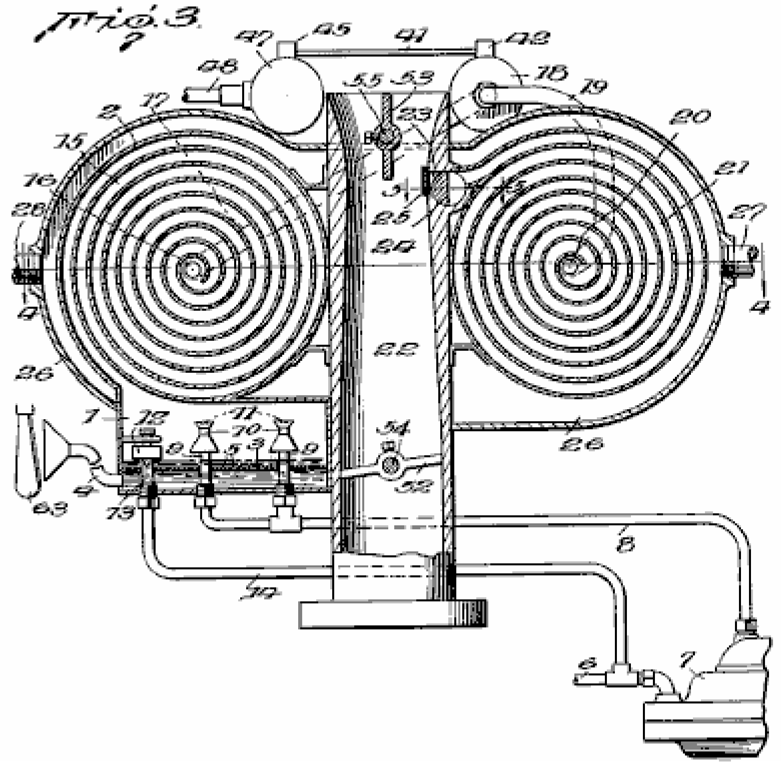

Fig.4 is a transverse sectional view on line 4--4 of Fig.3

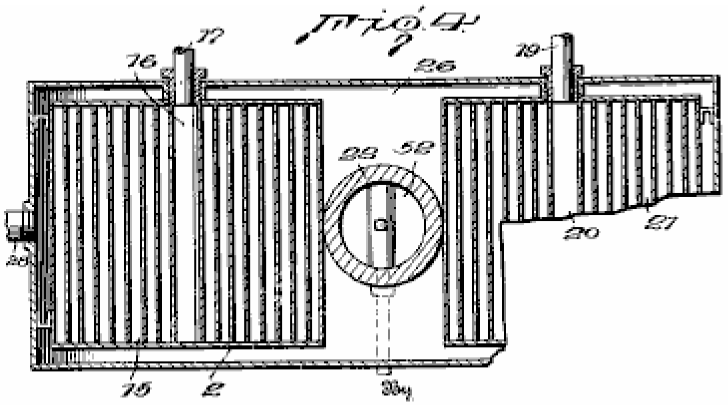

Fig.5 is a detail sectional view on line 5--5 of Fig.3

Fig. 5.

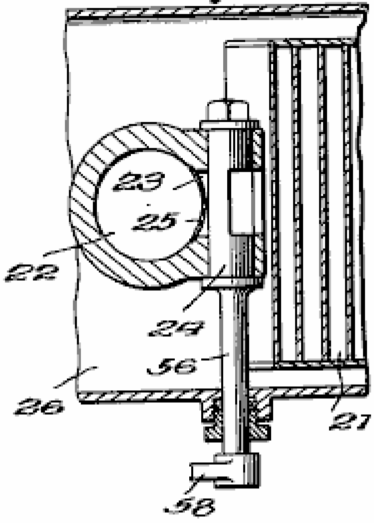

Fig.6 is a transverse sectional view through the pump and actuating motor, taken on line 6--6 of Fig.2

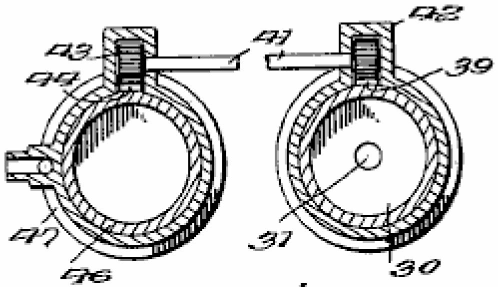

Fig. 6.

Fig.7 is a longitudinal sectional view through the pump taken on line 7--7 of Fig.2

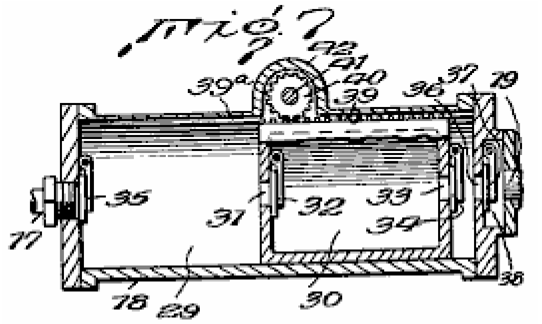

Fig.8 is a longitudinal sectional view through a part of the pump cylinder, showing the piston in elevation.

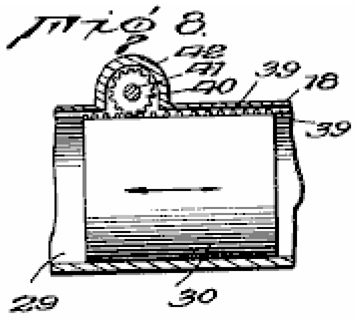

In the drawings, a vaporising and atomising chamber **1** is located at the bottom of the carburettor and has an outlet at its top for the passage of fuel vapour and air into a primary vapour-heating chamber **2**.

The vaporising chamber **1** is provided with a perforated false bottom **3** and is normally filled with liquid fuel to the level indicated in **Fig.1**. Air is introduced via conduit **4** into the space below the false bottom **3**, and then through the perforations **5** in the false bottom which breaks it into a myriad of fine bubbles, which pass upwards through the liquid fuel above the false bottom.

Liquid fuel for maintaining the level indicated in chamber **1** passes from the usual fuel tank (not shown) through pipe **6**, and is forced by pump **7** through pipe **8** through a pair of nozzles **9** having their outlets located in chamber **1**, just above the level of the liquid fuel in it. Pump **7** may be of any approved form but is preferably of the diaphragm type, as such fuel pumps are now standard equipment on most cars.

The nozzles **9** are externally threaded at their lower ends to facilitate their assembly in chamber **1** and to permit them to be readily removed should cleaning become necessary.

The upper ends of nozzles **9** are surrounded by venturi tubes **10** having baffles **11** located at their upper ends opposite the outlets of the nozzles, as is shown and described in detail in my Patent No. 1,997,497. The liquid fuel being forced from the ends of nozzles **9** into the restricted portions of the venturi tubes, causes a rapid circulation of the air and vapour in the chamber through tubes **10** and brings the air and vapour into intimate contact with the liquid fuel, with the result that a portion of the liquid fuel is vaporised. Unvaporised portions of the liquid fuel strike the baffles **11** and are thereby further broken up and deflected downwards into the upward-flowing current of air and vapour.

Pump **7** is regulated to supply a greater amount of liquid fuel to nozzles **9** than will be vaporised. The excess liquid fuel drops into chamber **1** which causes the liquid there to be maintained at the indicated level. When the liquid fuel rises above that level, float valve **12** opens and the excess fuel flows through overflow pipe **13** into pipe **14** which leads back to pipe **6** on the intake side of pump **7**. Such an arrangement permits a large amount of liquid fuel to be circulated by pump 7 without more fuel being withdrawn from the fuel tank than is actually vaporised and consumed by the engine. As float valve **12** will set upon the end of the outlet pipe **13** as soon as the liquid level drops below the indicated level, there is no danger of vapour passing into pipe **14** and thence into pump **7** to interfere with its normal operation.

The amount of liquid fuel vaporised by nozzles **9** and by the passage of air through the body of liquid, is sufficient to provide a suitably enriched vaporous mixture for introducing into the passage leading to the intake manifold of the engine, through which the main volume of air passes.

Vapour formed by air bubbling through the liquid fuel in the bottom of chamber **1** and that formed by the atomisation at the nozzles **9**, pass from the top of that chamber into the primary heating chamber **2**. As is clearly shown in **Fig.1**, chamber **2** comprises a relatively long spiral passage **15** through which the vaporous mixture gradually passes inwards to a central outlet **16** to which is connected a conduit **17** leading to a reciprocating pump **18** which forces the vaporous mixture under pressure into conduit **19** leading to a central inlet **20** of a secondary heating chamber **21**, which like the primary heating chamber, comprises a relatively long spiral. The vaporous mixture gradually passes outwards through the spiral chamber **21** and enters a downdraft air tube **22**, leading to the intake manifold of the engine, through an outlet **23** controlled by a rotary plug valve **24**.

To prevent the engine from backfiring into vapour chamber **2**, the ends of passage **19** are covered with a fine mesh screen **25**, which, operating on the principle of a miner's lamp, will prevent the vapour in chamber **2** from exploding in case of a backfire, but will not interfere substantially with the passage of the vapour from chamber **21** into air tube **22** when valve **24** is open.

The air tube **22** is preferably in the form of a venturi with the greatest constriction being at that point where outlet **23** is located, so that when valve **24** is opened, there will be a pulling force on the vaporous mixture due to the increased velocity of the air at the restricted portion of the air tube opposite outlet **23**, as well as an expelling force on it due to the pressure maintained in chamber **21** by pump **18**.

Both the primary and secondary spiral heating chambers **15** and **21**, and the central portion of air tube **22** are enclosed by a casing **26** having an inlet **27** and an outlet **28** for a suitable heating medium such as the gasses coming from the exhaust manifold.

Pump **18**, used to force the vaporous mixture from primary heating chamber **2** into and through the secondary chamber **21**, includes a working chamber **29** for hollow piston **30**, provided with an inlet **31** controlled by valve **32**, and an outlet **33** controlled by a valve **34**. The end of the working chamber **29** to which is connected conduit **17**, which conducts the vaporous mixture from primary heating chamber **2**, has an inlet valve **35**, and the opposite end of the working chamber has an outlet **36** controlled by valve **37** positioned in an auxiliary chamber **38**, to which is connected outlet pipe **19** which conducts the vaporous mixture under pressure to the secondary heating chamber **21**. Each of the valves **32**, **34**, **35** and **37** is of the one-way type. They are shown as being gravity-actuated flap valves, but it will be understood that spring-loaded or other types of one-way valves may be used if desired.

One side of piston **30** is formed with a gear rack **39** which is received in a groove **39a** of the wall forming the cylinder of the pump. The gear rack **39** engages with an actuating spur gear **40** carried on one end of shaft **41** and operating in a housing **42** formed on the pump cylinder. The other end of shaft **41** carries a spur gear **43**, which engages and is operated by a gear rack **44** carried on a piston **46** of a double-acting motor **47**. The particular construction of the double-acting motor **47** is not material, and it may be of a vacuum type commonly used for operating windscreen wipers on cars, in which case a flexible hose **48** would be connected with the intake manifold of the engine to provide the necessary vacuum for operating the piston **45**.

Under the influence of the double-acting motor **47**, the piston **30** of the pump has a reciprocatory movement in the working chamber **29**. Movement of the piston towards the left in **Fig.7** tends to compress the vaporous mixture in the working chamber between the end of the piston and the inlet from pipe **17**, and causes valve **35** to be forced tightly against the inlet opening. In a like manner, valves **32** and **34** are forced open and the vaporous mixture in that portion of the working chamber is forced through the inlet **31** in the end of the piston **30**, into the interior of the piston, where it displaces the vaporous mixture there and forces it into the space between the right-hand end of the piston and the right-hand end of the working chamber. The passage of the vaporous mixture into the right-hand end of the working chamber is supplemented by the partial vacuum created there when the piston moves to the left. During such movement of the piston, valve **37** is maintained closed and prevents any sucking back of the vaporous mixture from the secondary heating chamber **21**.

When motor **47** reverses, piston **30** moves to the right and the vaporous mixture in the right-hand end of the working chamber is forced past valve **37** through pipe **19** into the secondary heating chamber **21**. At the same time, a vacuum is created behind piston **30** which results in the left-hand end of the working chamber being filled again with the vaporous mixture from the primary heating chamber **2**.

As the operation of pump **47** varies in accordance with the suction created in the intake manifold, it should be regulated so that the vaporous mixture is pumped into the secondary heating chamber at a rate sufficient to maintain a greater pressure there than is needed. In order that the pressure in the working chamber may at all times be maintained at the optimum, a pipe **50** having an adjustable pressure-regulating valve **51** is connected between the inlet and outlet pipes **17** and **19**. Valve **51** will permit a portion of the vaporous mixture discharged from the pump to be bypassed to inlet **17** so that a pressure predetermined by the seating of valve **51** will at all times be maintained in the second heating chamber **21**.

Air tube **22** is provided with a butterfly throttle valve **52** and a choke valve **53**, as is usual with carburettors adapted for use with internal combustion engines. Operating stems **54**, **55** and **56** for valves **52**, **53** and **24** respectively, extend through casing **26**. An operating arm **57** is rigidly secured to the outer end of stem **55** and is connected to a rod **58** which extends to the dashboard of the car, or some other place convenient to the driver. The outer end of stem **56** of valve **24** which controls outlet **23** from the secondary heating chamber **21** has one end of an operating arm **59** fixed securely to it. The other end is pivotally connected to link **60** which extends downwards and pivotally connects to one end of a bell crank lever **61**, rigidly attached to the end of stem **54** of throttle valve **52**. The other end of the bell crank lever is connected to an operating rod **62** which, like rod **58**, extends to a place convenient to the driver. Valves **24** and **52** are connected for simultaneous operation so that when the throttle valve **52** is opened to increase the speed of the engine, valve **24** will also be opened to admit a larger amount of the heated vaporous mixture from the secondary heating chamber **21**.

While the suction created by pump **18** ordinarily will create a sufficient vacuum in the primary heating chamber **2** to cause air to be drawn into and upwards through the body of liquid fuel in the bottom of vaporising chamber **1**, in some instances it may be desirable to provide supplemental means for forcing the air into and up through the liquid, and in such cases an auxiliary pump may be provided for that purpose, or the air conduit **4** may be provided with a funnel-shaped intake which is positioned behind the engine fan **63** which is customarily placed behind the engine radiator.

The foregoing description has been given in connection with a downdraft type of carburettor, but it is to be understood that the invention is not limited to use with such type of carburettors and that the manner in which the mixture of air and vapour is introduced into the engine cylinders is immaterial as far as the advantages of the carburettor are concerned.

Before the carburettor is put into use, the pressure-regulating valve **51** in the bypass pipe **50** will be adjusted so that the pressure best suited to the conditions under which the engine is to be operated, will be maintained in the secondary heating chamber **21**. When valve **51** has thus been set and the engine started, pump **18** will create a partial vacuum in the primary heating chamber **2** and cause air to be drawn through conduit **4** to bubble upwards through the liquid fuel in the bottom of the vaporising and atomising chamber **1** with the resulting vaporisation of a part of the liquid fuel. At the same time, pump **7** will be set into operation and liquid fuel will be pumped from the fuel tank through the nozzles **9** which results in an additional amount of the fuel being vaporised. The vapour resulting from such atomisation of the liquid fuel and the passage of air through the body of the liquid, will pass into and through spiral chamber **1** where they will be heated by the products of combustion in the surrounding chamber formed by casing **26**. The fuel vapour and air will gradually pass inwards through outlet **16** and through conduit **17** to pump **18** which will force them into the secondary heating chamber **21** in which they will be maintained at the predetermined pressure by the pressure-regulating valve **51**. The vaporous mixture is further heated in chamber **21** and passes spirally outward to the valve-controlled outlet **23** which opens into air tube **22** which conducts the main volume of air to the intake manifold of the engine.

The heating of the vaporous mixture in the heating chambers **2** and **21**, tends to cause them to expand, but expansion in chamber **21** is prevented due to the pressure regulating valve **51**. However, as soon as the heated vaporous mixture passes valve **24** and is introduced into the air flowing through intake tube **22**, it is free to expand and thereby become relatively light so that a more intimate mixture with the air is obtained prior to the mixture being exploded in the engine cylinders. Thus it will be seen that the present invention not only provides means wherein the vaporous mixture from heating chamber **21** is forced into the air passing through air tube **22** by a positive force, but it is also heated to such an extent that after it leaves chamber **21** it will expand to such an extent as to have a density less than it would if introduced directly from the vaporising and atomising chamber **1** into the air tube **22**.

The majority of the liquid particles entrained by the vaporous mixture leaving chamber **1** will be separated in the first half of the outermost spiral of the primary heating chamber **2** and drained back into the body of liquid fuel in tank **1**. Any liquid particles which are not thus separated, will be carried on with the vaporous mixture and due to the circulation of that mixture and the application of heat, will be vaporised before the vaporous mixture is introduced into the air tube **22** from the secondary heating chamber **21**. Thus only “dry” vapour is introduced into the engine cylinders and any burning in the engine cylinders of liquid particles of the fuel, which would tend to raise the engine temperature above its most efficient level, is avoided.

While the fullest benefits of the invention are obtained by using both a primary and secondary heating chamber, the primary heating chamber may, if desired, be eliminated and the vaporous mixture pumped directly from the vaporising and atomising chamber **1** into the spiral heating chamber **21**.

From the foregoing description it will be seen that the present invention provides an improvement over the carburettor disclosed in my Patent No. 1,997,497, in that it is possible to maintain the vaporous mixture in the heating chamber **21** under a predetermined pressure, and that as soon as the vaporous mixture is introduced into the main supply of air passing to the intake manifold of the engine, it will expand and reach a density at which it will form a more intimate mixture with the air. Furthermore, the introduction of the vaporous mixture into the air stream in the tube **22**, causes a certain amount of turbulence which also tends to give a more intimate mixture of vapour molecules with the air.

The High MPG Carburettor of Ivor Newberry

US Patent 2,218,922 22nd October 1940 Inventor: Ivor B. Newberry

VAPORIZER FOR COMBUSTION ENGINES

This patent describes a carburettor design which was able to produce very high mpg figures using the gasoline available in the USA in the 1930s but which is no longer available as the oil industry does not want functional high mpg carburettors to be available to the public.

DESCRIPTION

This invention relates to fuel vaporising devices for combustion engines and more particularly, is concerned with improvements in devices of the kind where provision is made for using the exhaust gasses of the engines as a heating medium to aid in the vaporisation of the fuel.

One object of the invention is to provide a device which will condition the fuel in such a manner that its potential energy may be fully utilised, thereby ensuring better engine performance and a saving in fuel consumption, and preventing the formation of carbon deposits in the cylinders of the engine and the production of carbon monoxide and other objectionable gasses.

A further object is to provide a device which is so designed that the fuel is delivered to the cylinders of the engine in a highly vaporised, dry and expanded state, this object contemplating a device which is available as an exhaust box in which the vaporisation and expansion of the liquid components is effected at sub-atmospheric pressures and prior to their being mixed with the air component.

A still further object is to provide a device which will condition the components of the fuel in such a manner that they be uniformly and intimately mixed without the use of a carburettor.

A still further object is to provide a device which will enable the use of various inferior and inexpensive grades of fuel.

DESCRIPTION OF THE DRAWINGS

Fig.1 is an elevational view of the device as applied to the engine of a motor vehicle.

Fig. 1.

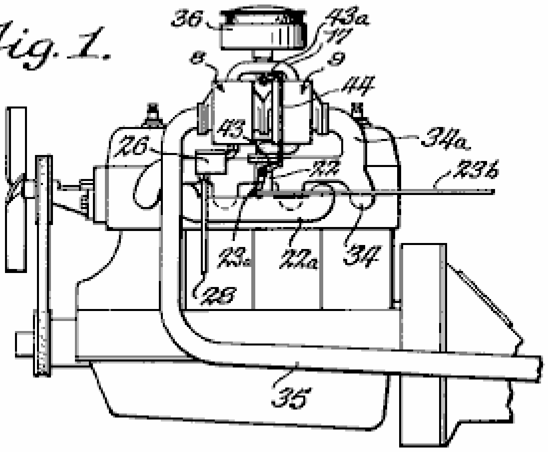

Fig.2 is an enlarged view of the device, partially in elevation and partially in section.

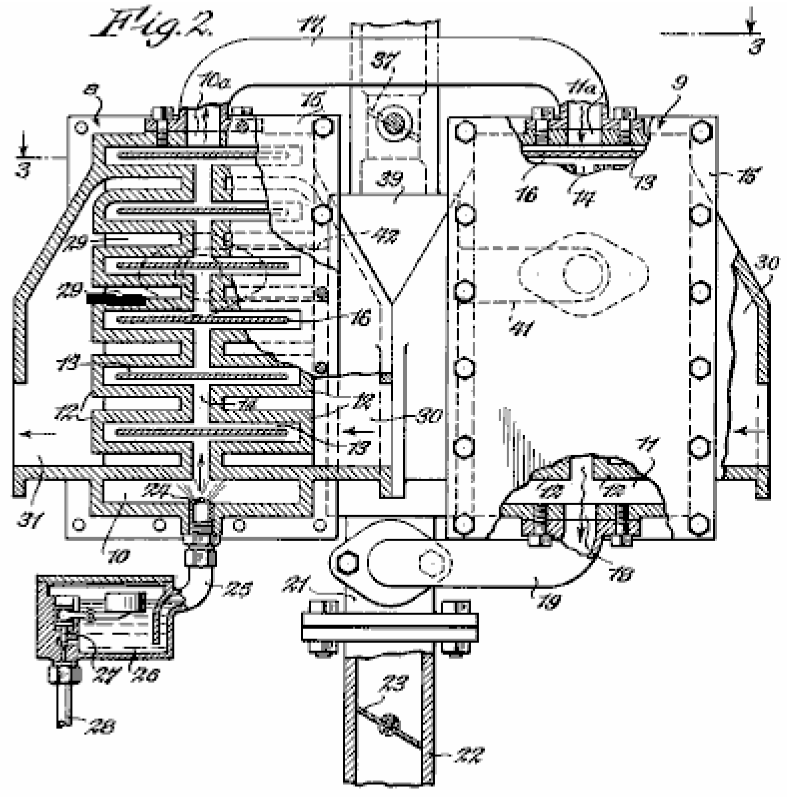

Fig.3 is a section taken along line 3--3 of Fig.2

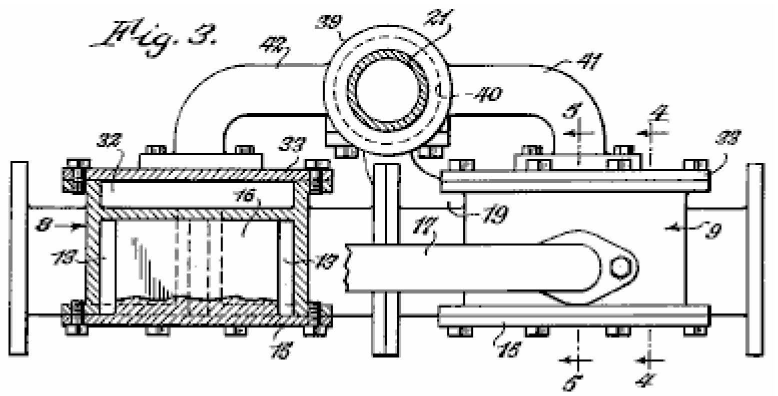

Fig.4 is a section taken along line 4--4 of Fig.3

Fig. 4.

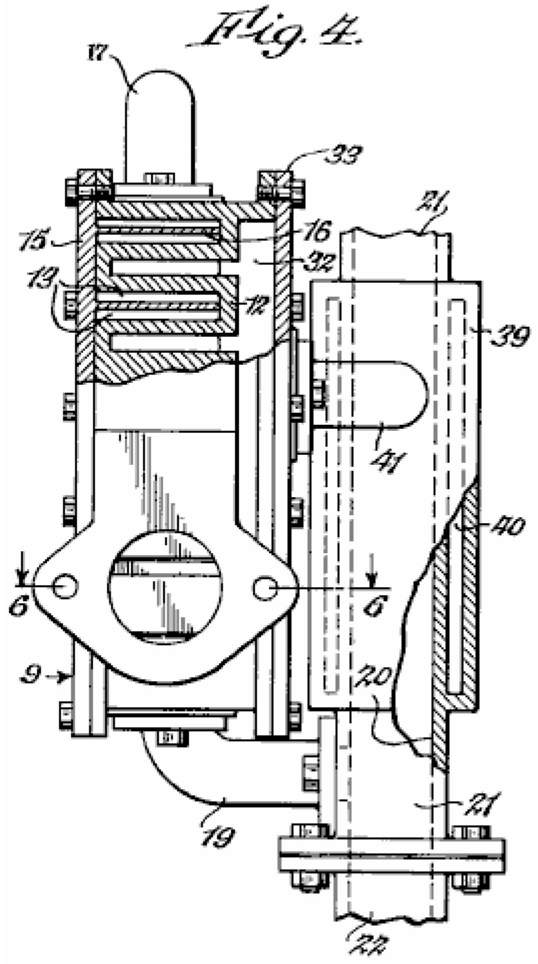

Fig.5 is a fragmentary section taken along line 5--5 of Fig.3

Fig. 5.

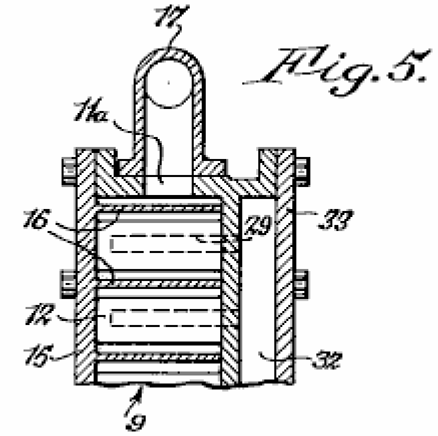

Fig.6 is a section taken along line 6--6 of Fig.4

Fig. 6.

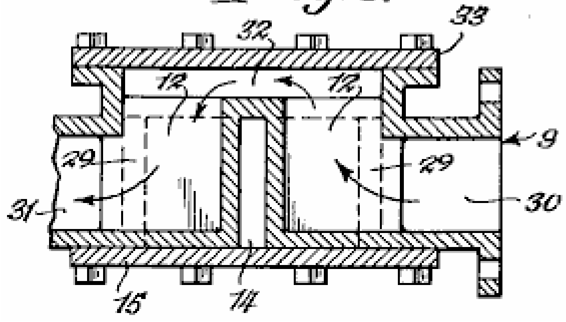

DESCRIPTION

The device as illustrated, includes similar casings **8** and **9** which are secured together as a unit and which are formed to provide vaporising chambers **10** and **11**, respectively, it being understood that the number of casings may be varied. Two series of ribs **12** are formed in each of the vaporising chambers, the ribs of each series being spaced from one another so as to provide branch passages **13** and being spaced from the ribs of the adjacent series to provide main passages **14** with which the branch passages communicate.

The vaporising chambers are closed by cover plates **15**. The cover plates carry baffles **16** which are supported in the spaces between the ribs **12**. The baffles extend across the main passages **14** and into, but short of the ends of the branch passages **13** to provide tortuous paths. Outlet **10a** of chamber **10** is connected by conduit **17** to inlet **11a** of chamber **11**. Outlet **18** of chamber **11**, is connected by conduit **19** with mixing chamber **20** which is located at the lower end of pipe **21** which in turn is connected to and extension **22** of the intake manifold **22a** of the engine. Extension **22** contains a valve **23** which is connected by a lever **23a** (**Fig.1**) and rod **23b** to a conventional throttle (not shown).

The liquid fuel is introduced into the vaporising chamber **10** through nozzle **24** which is connected by pipe **25** to a reservoir **26** in which the fuel level is maintained by float-controlled valve **27**, the fuel being supplied to the reservoir through pipe **28**.

In accordance with the invention, ribs **12** are hollow, each being formed to provide a cell **29**. The cells in one series of ribs open at one side into an inlet chamber **30**, while the cells of the companion series open at one side into an outlet chamber **31**. The cells of both series of ribs open at their backs into a connecting chamber **32** which is located behind the ribs and which is closed by a cover plate **33**. Casings **8** and **9** are arranged end-to-end so that the outlet chamber of **9** communicates with the inlet chamber of **8**, the gasses from the exhaust manifold **34** being introduced into the inlet chamber of casing **9** through extension **34a**. The exhaust gasses enter the series of cells at the right hand side of the casing, pass through the cells into the connecting chamber at the rear and then enter the inlet chamber of casing **8**. They pass successively through the two series of cells and enter exhaust pipe **35**. The exhaust gasses leave the outlet chamber **31**, and the path along which they travel is clearly shown by the arrows in **Fig.6**. As the gasses pass through casings **8** and **9**, their speed is reduced to such a degree that an exhaust box (muffler) or other silencing device is rendered unnecessary.

It will be apparent that when the engine is operating a normal temperature, the liquid fuel introduced into chamber **10** will be vaporised immediately by contact with the hot walls of ribs **12**. The vapour thus produced is divided into two streams, one of which is caused to enter each of the branch passages at one side of the casing and the other is caused to enter each of the branch passages at the opposite side of the casing. The two streams of vapour merge as they pass around the final baffle and enter conduit **17**, but are again divided and heated in a similar manner as they flow through casing **9**. Each of the vapour streams is constantly in contact with the highly heated walls of ribs **12**. This passage of the vapour through the casings causes the vapour to be heated to such a degree that a dry highly-vaporised gas is produced. In this connection, it will be noted that the vaporising chambers are maintained under a vacuum and that vaporisation is effected in the absence of air. Conversion of the liquid into highly expanded vapour is thus ensured. The flow of the exhaust gasses through casings **8** and **9** is in the opposite direction to the flow of the vapour. The vapour is heated in stages and is introduced into chamber **20** at its highest temperature.

The air which is mixed with the fuel vapour, enters pipe **21** after passing through a conventional filter **36**, the amount of air being regulated by valve **37**. The invention also contemplates the heating of the air prior to its entry into mixing chamber **20**. To this end, a jacket 39 is formed around pipe **21**. The jacket has a chamber **40** which communicates with chamber **32** of casing **9** through inlet pipe **41** and with the corresponding chamber of casing **8** through outlet pipe **42**. A portion of the exhaust gasses is thus caused to pass through chamber **40** to heat the air as it passes through conduit **21** on its way to the mixing chamber. Valve **37** is connected to valve **23** by arms **43** and **43a** and link **44** so that the volume of air admitted to the mixing chamber is increased proportionately as the volume of vapour is increased. As the fuel vapour and air are both heated to a high temperature and are in a highly expanded state when they enter the mixing chamber, they readily unite to provide a uniform mixture, the use of a carburettor or similar device for this purpose being unnecessary.

From the foregoing it will be apparent that the components of the fuel mixture are separately heated prior to their entry into mixing chamber **20**. As the vapour which is produced is dry (containing no droplets of liquid fuel) and highly expanded, complete combustion is ensured. The potential energy represented by the vapour may thus be fully utilised, thereby ensuring better engine performance and a saving in fuel consumption. At the same time, the formation of carbon deposits in the combustion chambers and the production of carbon monoxide and other objectionable exhaust gasses is prevented. The device has the further advantage that, owing to the high temperature to which the fuel is heated prior to its admission into the combustion chambers, various inferior and inexpensive grades of fuel may be used with satisfactory results.

The High MPG Carburettor of Robert Shelton

US Patent 2,982,528 **2nd May 1940** **Inventor: Robert S. Shelton**

VAPOUR FUEL SYSTEM

This patent describes a carburettor design which was able to produce very high mpg figures using the gasoline available in the USA in the 1930s but which is no longer available as the oil industry does not want functional high mpg carburettors to be available to the public.

DESCRIPTION

This invention relates to improvements in vapour fuel systems which are to be used for internal combustion engines.

An object of this invention is to provide a vapour fuel system which will provide a great saving in fuel since approximately eight times the mileage that is obtained by the conventional combustion engine, is provided by the use of this system.

Another object of the invention is to provide a vapour fuel system which is provided with a reservoir to contain liquid fuel which is heated to provide vapour from which the internal combustion engine will operate.

With the above and other objects and advantages in view, the invention consists of the novel details of construction, arrangement and combination of parts more fully described below, claimed and illustrated in the accompanying drawings.

DESCRIPTION OF THE DRAWINGS

Fig.1 is an elevational view of a vapour fuel system embodying the invention.

FIG. 1

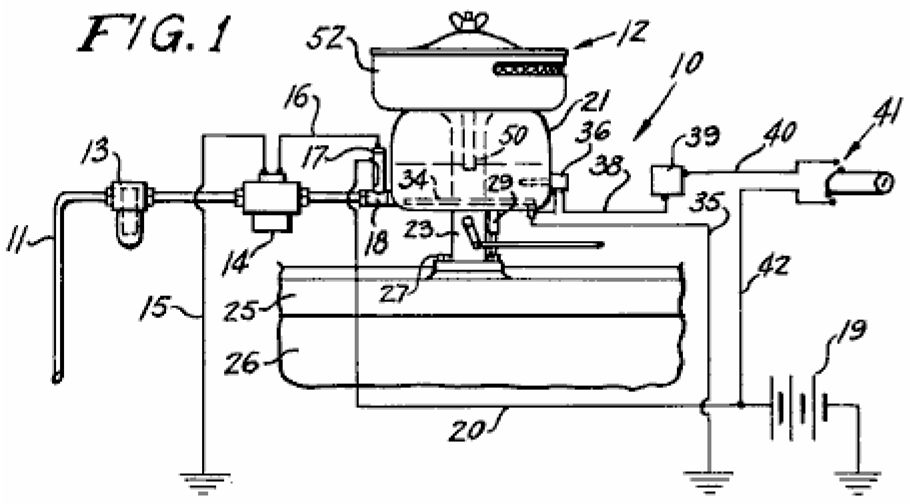

Fig.2 is an enlarged view, partly in section, showing the carburettor forming part of the system shown in Fig.1.

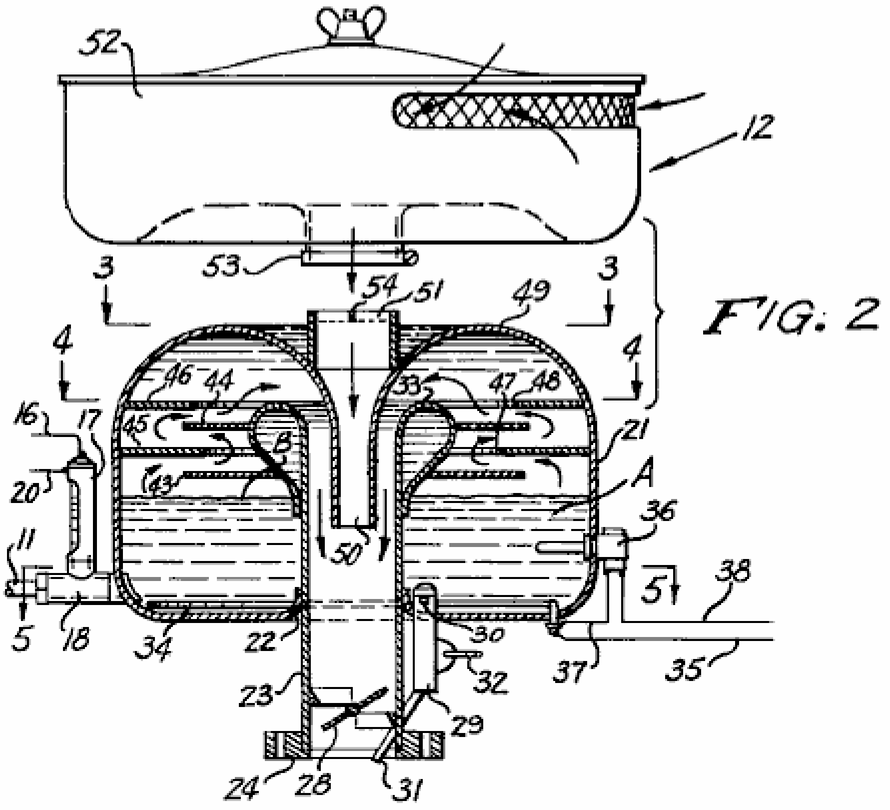

FIG. 2

Fig.3 is a transverse sectional view on line 3--3 of Fig.2

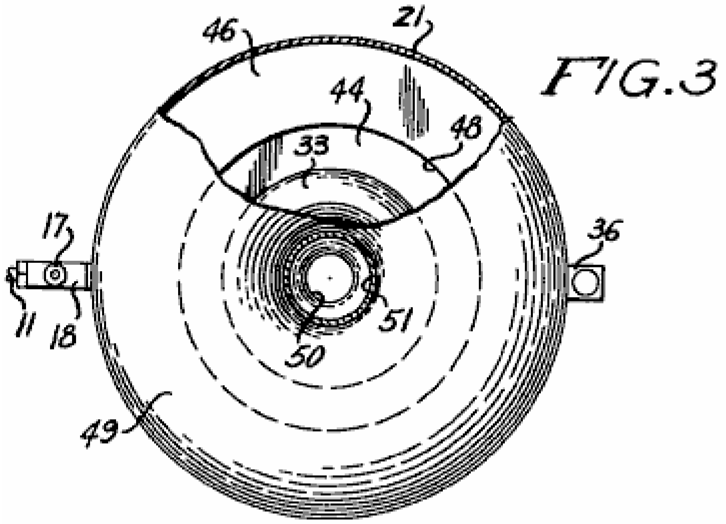

FIG.3

Fig.4 is a transverse sectional view on line 4--4 of Fig.2

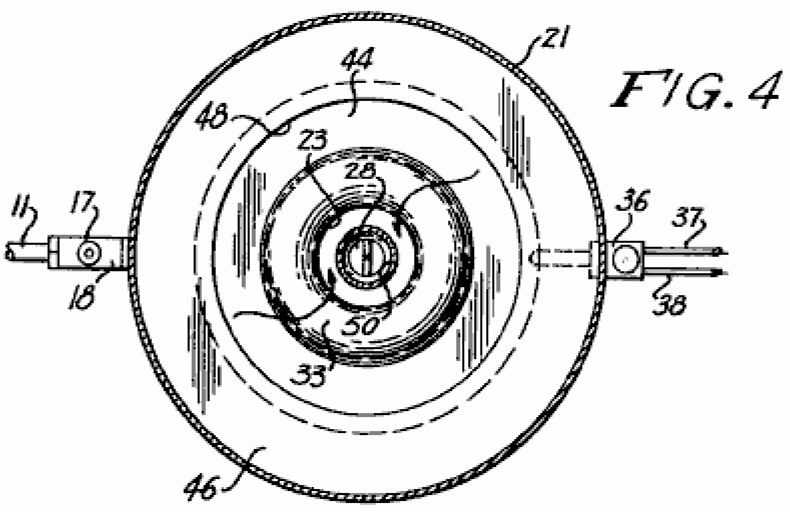
FIG. 4

Fig.5 is a transverse sectional view on line 5--5 of Fig.2

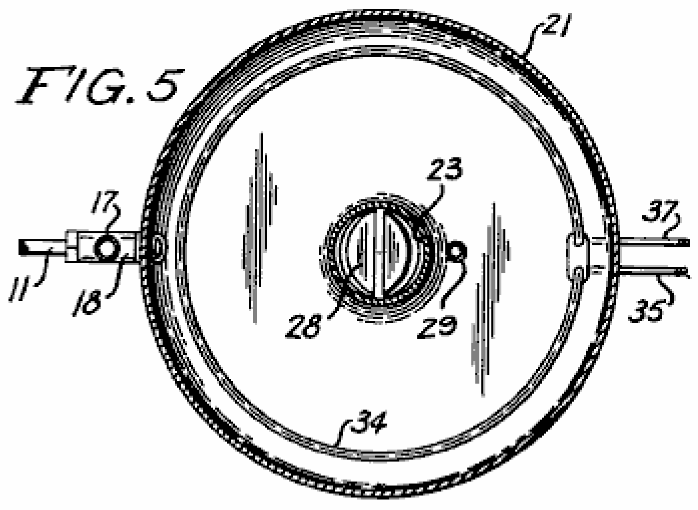
FIG. 5

The reference numbers used in the drawings always refer to the same item in each of the drawings. The vapour fuel system **10** includes a conduit **11** which is connected to the fuel tank at one end and to a carburettor **12** at the opposite end. In conduit **11** there is a fuel filter **13** and an electric fuel pump **14**. Wire **15** grounds the pump and wire **16** connects the pump to a fuel gauge **18** on which is mounted a switch **17** which is connected to a battery **19** of the engine by wire **20**.

The fuel gauge/switch is of conventional construction and is of the type disclosed in US Patents No. 2,894,093, No. 2,825,895 and No. 2,749,401. The switch is so constructed that a float in the liquid in the gauge, opens a pair of contacts when the liquid rises and this cuts off the electric pump **14**. As the float lowers due to the consumption of the liquid fuel in the body, the float falls, closing the contacts and starting pump **14** which replenishes the liquid fuel in the body.

Carburettor **12** includes a dome-shaped circular bowl or reservoir **21** which is provided with a centrally located flanged opening **22** whereby the reservoir **21** is mounted on a tubular throat **23**. An apratured collar **24** on the lower end of throat **23** is positioned on the intake manifold **25** of an internal combustion engine **26** and fastenings **27** secure the collar to the manifold in a fixed position.

A vapour control butterfly valve **28** is pivotally mounted in the lower end of throat **23** and valve **28** controls the entrance of the vapour into the engine and so controls its speed.

A fuel pump **29**, having an inlet **30**, is mounted in the bottom of the reservoir 21 so that the inlet **30** communicates with the interior of the reservoir. A spurt or feed pipe **31** connected to pump **29** extends into throat **23** so that by means of a linkage **32** which is connected to pump **29** and to a linkage for control valve **28** and the foot throttle of the engine, raw fuel may be forced into throat **23** to start the engine when it is cold.

The upper end of throat **23** is turned over upon itself to provide a bulbous hollow portion **33** within reservoir **21**. An immersion heater **34** is positioned in the bottom of the reservoir and wire **35** grounds the heater. A thermostat **36** is mounted in the wall of the reservoir and extends into it. Wire **37** connects the thermostat to heater **34** and wire **38** connects the thermostat to the thermostat control **39**. Wire **40** connects the control to the ignition switch **41** which in turn is connected to battery **19** via wires **20** and **42**.

A pair of relatively spaced parallel perforated baffle plates **43** and **44**, are connected to the bulbous portion **33** on the upper end of throat **23**, and a second pair of perforated baffle plates **45** and **46** extend inwards from the wall of reservoir **21** parallel to each other and parallel to baffle plates **43** and **44**.

The baffle plates are arranged in staggered relation to each other so that baffle plate **45** is between baffle plates **43** and **44** and baffle plate **46** extends over baffle plate **44**.

Baffle plate **45** has a central opening **47** and baffle plate **46** has a central opening **48** which has a greater diameter than opening **47**. The domed top **49** of reservoir **21**, extends into a tubular air intake **50** which extends downwards into throat **23** and a mounting ring **51** is positioned on the exterior of the domed top, vertically aligned with intake **50**. An air filter **52** is mounted on the mounting ring **51** by a coupling **53** as is the usual procedure, and a spider **54** is mounted in the upper end of mounting ring **51** to break up the air as it enters ring **51** from air filter **52**.

In operation, with carburettor **12** mounted on the internal combustion engine instead of a conventional carburettor, ignition switch **41** is turned on. Current from battery **19** will cause pump **14** to move liquid fuel into reservoir **21** until float switch **18** cuts the pump off when the liquid fuel **A** has reached level **B** in the reservoir. The control **39** is adjusted so that thermostat **36** will operate heater **34** until the liquid fuel has reached a temperature of 105^0 F at which time heater **34** will be cut off. When the liquid fuel has reached the proper temperature, vapour will be available to follow the course indicated by the arrows in **Fig.2**.

The engine is then started and if the foot control is actuated, pump **29** will cause raw liquid fuel to enter the intake manifold **25** until the vapour from the carburettor is drawn into the manifold to cause the engine to operate. As the fuel is consumed, pump **14** will again be operated and heater **34** will be operated by thermostat **36**. Thus, the operation as described will continue as long as the engine is operating and the ignition switch **41** is turned on. Reservoir **21** will hold from 4 to 6 pints (2 to 4 litres) of liquid fuel and since only the vapour from the heated fuel will cause the carburettor **12** to run the engine, the engine will operate for a long time before more fuel is drawn into reservoir **21**.

Baffles **43**, **44**, **45** and **46** are arranged in staggered relation to prevent splashing of the liquid fuel within the carburettor. The level **B** of the fuel in reservoir **21** is maintained constant by switch **18** and with all elements properly sealed, the vapour fuel system **10** will operate the engine efficiently.

Valve **28** controlling the entrance of vapour into intake manifold **25**, controls the speed of the engine in the same manner as the control valve in a conventional carburettor.

There has thus been described a vapour fuel system embodying the invention and it is believed that the structure and operation of it will be apparent to those skilled in the art. It is also to be understood that changes in the minor details of construction, arrangement and combination of parts may be resorted to provided that they fall within the spirit of the invention.

The High MPG Carburettor of Harold Schwartz

US Patent 3,294,381 27th December 1966 Inventor: Harold Schwartz

CARBURETTOR

This patent describes a carburettor design which was able to produce very high mpg figures using the gasoline available in the USA at the time but which is no longer available as the oil industry does not want functional high mpg carburettors to be available to the public.

DESCRIPTION

This invention relates to a carburettor construction. An object of the present invention is to provide a carburettor in which the fuel is treated by the hot exhaust fumes of an engine before being combined with air and being fed into the engine.

Another object of the invention is to provide a carburettor as characterised above, which circulates the fume-laden fuel in a manner to free it of inordinately large globules of fuel, thereby insuring that only finely divided and pre-heated fuel of mist-like consistency is fed to the intake manifold of the engine.

The present carburettor, when used for feeding the six-cylinder engine of a popular car, improved the miles per gallon performance under normal driving conditions using a common grade of fuel, by over 200%. This increased efficiency was achieved from the pre-heating of the fuel and keeping it under low pressure imposed by suction applied to the carburettor for the purpose of maintaining the level of fuel during operation of the engine. This low pressure in the carburettor causes increased vaporisation of the fuel in the carburettor and raises the efficiency of operation.

This invention also has for its objects; to provide a carburettor which is positive in operation, convenient to use, easily installed in its working position, easily removed from the engine, economical to manufacture, of relatively simple design and of general superiority and serviceability.

The invention also comprises novel details of construction and novel combinations and arrangements of parts, which will appear more fully in the course of the following description and which is based on the accompanying drawings. However, the drawings and following description merely describes one embodiment of the present invention, and are only given as an illustration or example.

DESCRIPTION OF THE DRAWINGS

In the drawings, all reference numbers apply to the same parts in each drawing.

Fig.1 is a partly broken plan view of a carburettor constructed in accordance with the present invention, shown with a fuel supply, feeding and return system.

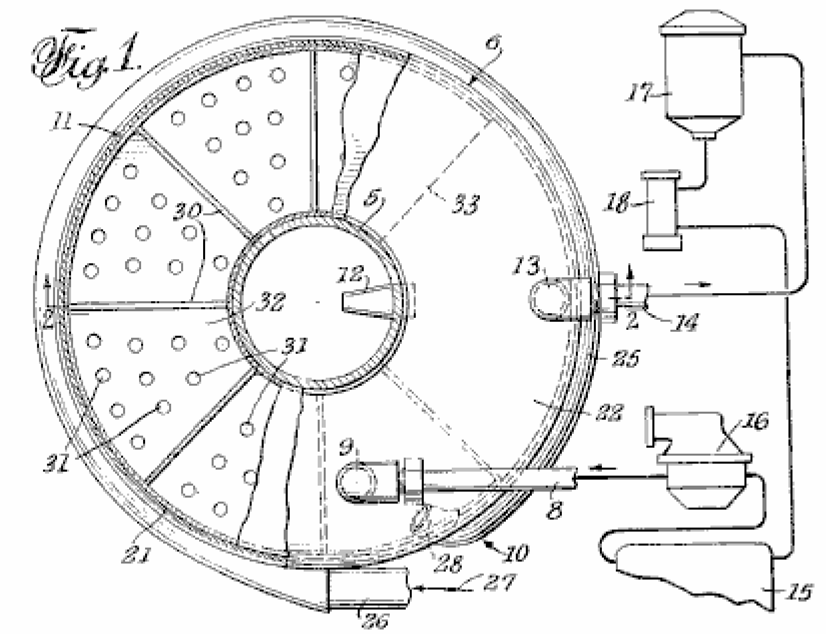

Fig.2 is a vertical sectional view of the carburettor taken on the plane of line 2--2 in Fig.1

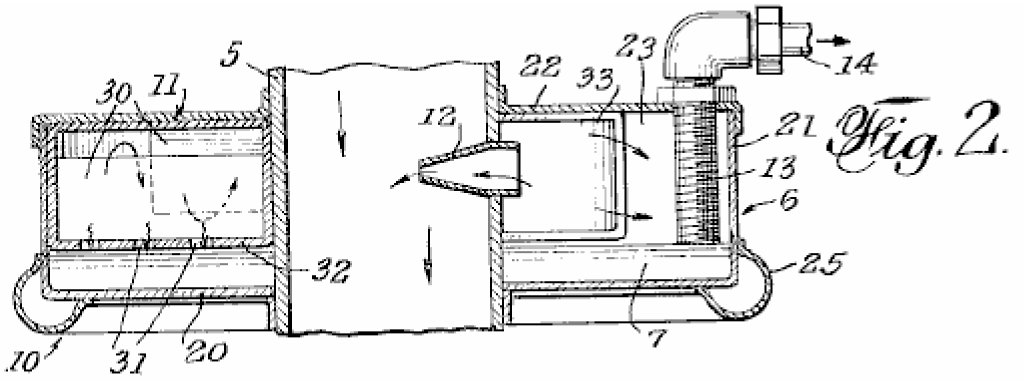

Fig.3 is a partial side elevation and partial sectional view of the carburettor, showing additional structural details

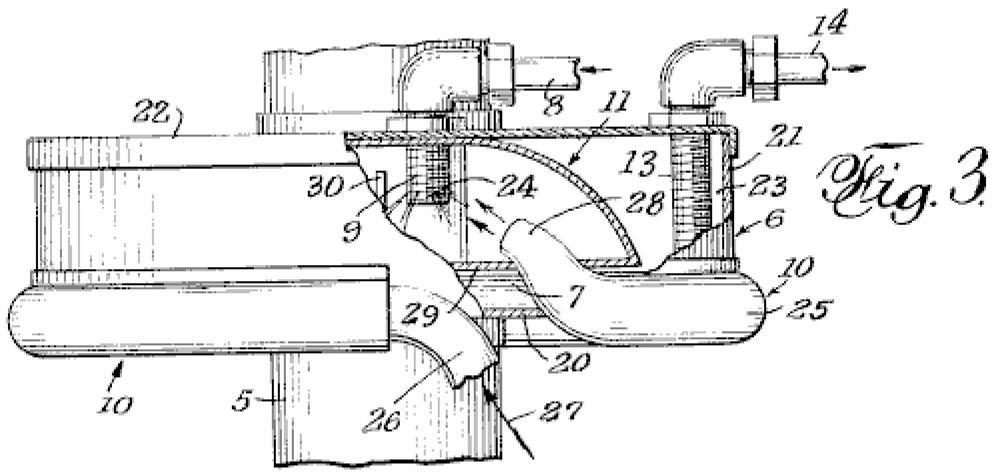

The carburettor is preferably mounted on the usual downdraft air tube **5** which receives a flow of air through the air filter. Tube **5** is provided with a throttle or butterfly valve which controls the flow and incorporates a flow-increasing venturi passage. These common features of the fuel feed to the engine intake manifold are not shown since these features are well known and they are also disclosed in my pending Patent application Serial No.

182,420 now abandoned. The present carburettor embodies improvements over the disclosure of the earlier application.

The present carburettor comprises a housing **6** mounted on air tube **5**, and designed to hold a shallow pool of fuel **7**, a fuel inlet **8** terminating in a spray nozzle **9**, an exhaust gas manifold **10** to conduct heated exhaust gasses for discharge into the spray of fuel coming out of nozzle **9** and for heating the pool of fuel **7** underneath it. Means **11** to scrub the fuel-fumes mixture to eliminate large droplets of fuel from the mixture (the droplets fall into pool **7** underneath), a nozzle tube **12** to receive the scrubbed mixture and to pass the mixture under venturi action into air tube **5** where it is combined with air and made ready for injection into the intake manifold of the engine. Pickup pipe **13** is connected to an outlet **14** for drawing excess fuel from pool **7** during operation of the carburettor.

The system connected to the carburettor is shown in **Fig.1**, and comprises a fuel tank **15**, a generally conventional fuel pump **16** for drawing fuel from the tank and directing it to inlet **8**, a fuel filter **17**, and a pump **18** connected in series between the fuel tank and outlet **14** to place pipe **13** under suction and to draw excess fuel from the carburettor back to tank **15** for re-circulation to inlet **8**.

Carburettor housing **6** may be circular, as shown and quite flat compared to its diameter, so as to have a large flat bottom **20** which, with the cylindrical wall **21**, holds the fuel pool **7**. Cover **22** encloses the top of the housing. The bottom **20** and cover **22** have aligned central openings through which the downdraft tube **5** extends, this pipe forming the interior of the housing, creating an annular inner space **23**.

The fuel inlet **8** is attached to cover **22** by a removable connection. Spray nozzle **9** extends through the cover. While the drawing shows spray-emitting holes **24** arranged to provide a spray around nozzle 7, the nozzle may be formed so that the spray is directional as desired to achieve the most efficient interengagement of the sprayed fuel with the heating gasses supplied by the manifold **10**.

The manifold is shown as a pipe **25** which has and end **26** extending from the conventional heat riser chamber (not shown) of the engine, the arrow **27** indicating exhaust gas flow into pipe **25**. The pipe may encircle the lower portion of the housing **6**, to heat the pool of fuel **7** by transfer of heat through the wall of the housing. The manifold pipe is shown with a discharge end **28** which extends into the housing in an inward and upward direction towards nozzle **9** so that the exhaust gasses flowing in the pipe intermingle with the sprayed fuel and heat it as it leaves the nozzle.

The fuel-scrubbing means **11** is shown as a curved chamber **29** located inside housing **6**, provided with a series of baffle walls **30** which cause the fumes-heated fuel mist to follow a winding path and intercept the heavier droplets of fuel which then run down the faces of the baffle walls, through openings **31** in the bottom wall **32** of scrubbing chamber **29** into the interior space **23** of housing **6** above the level of the fuel pool **7**.

Pickup pipe **13** is also shown as carried by housing cover **22** and may be adjusted so that its lower open end is so spaced from the housing bottom **20** as to regulate the depth of pool **7**, which is preferably below the bottom wall **32** of the scrubbing chamber **29**. Since this pipe is subject to the suction of pump **18** through outlet **14** and filter **17**, the level of pool **7** is maintained by excess fuel being returned to tank **15** by pump **16**.

It will be seen that the surface of pool **7** is subject not only to the venturi action in tube **5**, but also to the suction of pump **18** as it draws excess fuel back to fuel tank **15**. Thus, the surface of the pool is under somewhat less than atmospheric pressure which increases the rate of vaporisation from the pool surface, the resulting vapour combining with the flow from the scrubbing chamber to the downdraft tube **5**..

While this description has illustrated what is now contemplated to be the best mode of carrying out the invention, the construction is, of course, subject to modification without departing from the spirit and scope of the invention. Therefore, it is not desired to restrict the invention to the particular form of construction illustrated and described, but to cover all modifications which may fall within its scope.

The High MPG Carburettor of Oliver Tucker

US Patent 3,653,643 4th April 1972 Inventor: Oliver M. Tucker

CARBURETTOR

This patent describes a carburettor design which was able to produce very high mpg figures using the gasoline available in the USA at the time but which is no longer available as the oil industry does not want functional high mpg carburettors to be available to the public.

ABSTRACT

A carburettor including a housing having a fluid reservoir in the bottom, an air inlet at the top of the housing, a delivery pipe coaxially mounted within the housing and terminating short of the top of the housing, and a porous vaporising filter substantially filling the reservoir. A baffle is concentrically mounted within the housing and extends partially into the vaporising filter in the reservoir to deflect the incoming air through the filter. The level of liquid fuel in the reservoir is kept above the bottom of the baffle, so that air entering the carburettor through the inlet must pass through the liquid fuel and vaporising filter in the reservoir before discharge through the outlet. A secondary air inlet is provided in the top of the housing for controlling the fuel air ratio of the vaporised fuel passing into the delivery pipe.

BACKGROUND OF THE INVENTION

It is generally well known that liquid fuel must be vaporised in order to obtain complete combustion. Incomplete combustion of fuel in internal combustion engines is a major cause of atmospheric pollution. In a typical automotive carburettor, the liquid fuel is atomised and injected into the air stream in a manifold of approximately 3.14 square inches in cross-sectional area. In an eight cylinder 283 cubic inch engine running at approximately 2,400 rpm requires 340,000 cubic inches of air per minute. The air velocity in the intake manifold at this engine speed will be approximately 150 feet per second and it will therefore take approximately 0.07 seconds for a particle of fuel to move from the carburettor to the combustion chamber and the fuel will remain in the combustion chamber for approximately 0.0025 seconds.

It is conceivable that in this short period of time, complete vaporisation of the fuel is not achieved and as a consequence, incomplete combustion occurs, resulting in further air pollution. The liquid fuel particles if not vaporised, can deposit on the cylinder walls and dilute the lubricating oil film there, promoting partial burning of the lubricating oil and adding further to the pollution problem. Destruction of the film of lubricating oil by combustion can also increase mechanical wear of both cylinders and piston rings.

SUMMARY OF THE INVENTION

The carburettor of this invention provides for the complete combustion of liquid fuel in an internal combustion engine, with a corresponding decrease of air pollutant in the exhaust gasses. This is achieved by supplying completely vaporised or dry gas to the combustion chamber. The primary air is initially filtered prior to passing through a vaporising filter which is immersed in liquid fuel drawn from a reservoir in the carburettor. The vaporising filter continuously breaks the primary air up into small bubbles thereby increasing the surface area available for evaporation of the liquid fuel. Secondary air is added to the enriched fuel-air mixture through a secondary air filter prior to admission of the fuel-air mixture into the combustion chambers of the engine. Initial filtration of both the primary and secondary air removes any foreign particles which may be present in the air, and which could cause increased wear within the engine. The carburettor also assures delivery of a clean dry gas to the engine due to the gravity separation of any liquid or dirt particles from the fuel-enriched primary air.

Other objects and advantages will become apparent from the following detailed description when read in conjunction with the accompanying drawing, in which the single figure shows a perspective cross-sectional view of the carburettor of this invention.

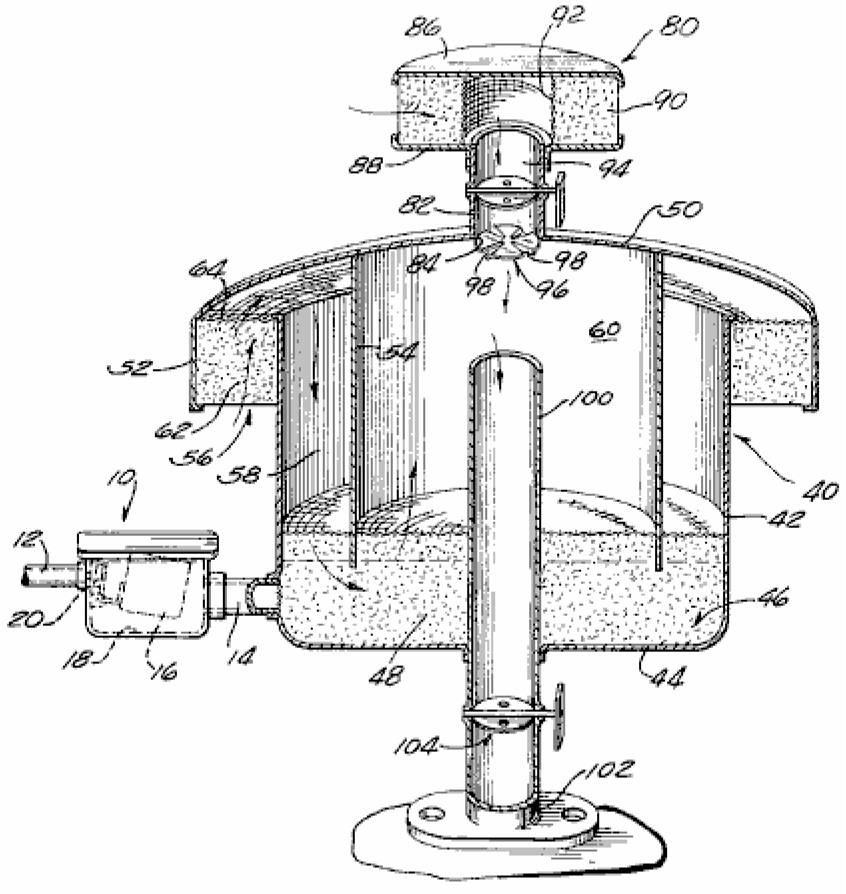

DESCRIPTION OF THE INVENTION

The carburettor **40** disclosed here is adapted for use with an internal combustion engine where air is drawn through the carburettor to vaporise the fuel in the carburettor prior to its admission to the engine.

In this regard, the flow of liquid fuel, gas or oil, to the carburettor is controlled by means of a float valve assembly **10** connected to a source of liquid fuel by fuel line **12** and to the carburettor **40** by a connecting tube **14**. The flow of liquid fuel through the float valve assembly **10** is controlled by a float **16**, pivotally mounted within a float chamber **18** and operatively connected to a float valve **20**.

In accordance with the invention, the liquid fuel admitted to the carburettor **40** through tube **14**, is completely evaporated by the primary air for the engine within the carburettor and mixed with secondary air prior to admission into a delivery tube **100** which is connected to the manifold **102** of the engine. More specifically, carburettor **40** includes a cylindrical housing or pan **42**, having a bottom wall **44** which forms a liquid fuel and filter reservoir **46**. A vaporising filter **48** is positioned within reservoir **46** and extends upwards for a distance from the bottom wall **44** of the housing **42**. The vaporising filter **48** is used to continuously break up the primary air into a large number of small bubbles as it passes through the liquid fuel in reservoir **46**. This increases the surface area per volume of air available for evaporation of the liquid fuel, as described in more detail below. This filter **48** is formed of a three-dimensional skeletal material that is washable and is not subject to breakdown under the operating conditions inside the carburettor. A foamed cellular plastic polyurethane filter having approximately 10 to 20 pores per inch has been used successfully in the carburettor.

Housing **42** is closed at the top by a hood or cover **50** which can be secured in place by any appropriate means. The hood has a larger diameter than the diameter of housing **42** and includes a descending flange **52** and a descending baffle **54**. Flange **52** is concentrically arranged and projects outwards beyond the sides of housing **42** to form a primary air inlet **56**. Baffle **54** is concentrically positioned inside housing **42** to create a primary air chamber **58** and a central mixing chamber **60**.

Primary air is drawn into housing **42** through air inlet **56** and is filtered through primary air filter **62** which is removably mounted in the space between flange **52** and the outside of the wall of housing **42** by means of a screen **64**. The primary air filter **62** can be made of the same filtering material as the vaporising filter **48.**

As the primary air enters the primary air chamber **58** it is deflected through the liquid fuel in reservoir **46** by means of the cylindrical baffle **54**. This baffle extends down from hood **50** far enough to penetrate the upper portion of the vaporising filter **48**. The primary air must pass around the bottom of baffle **54** and through both the liquid fuel and the vaporising filter **48** prior to entering the mixing chamber **60**.

The level of the liquid fuel in reservoir **46** is maintained above the bottom edge of baffle **54** by means of the float valve assembly **10**. The operation of the float valve assembly **10** is well known. Float chamber **18** is located at approximately the same level as reservoir **46** and float **16** pivots in response to a drop in the level of the liquid fuel in the float chamber and opens the float valve **20**.

One of the important features of the present invention is the efficiency of evaporation of the liquid fuel by the flow of the large number of bubbles through the reservoir. This is believed to be caused by the continual break up of the bubbles as they pass through the vaporising filter **48**. It is well known that the rate of evaporation caused by a bubble of air passing unmolested through a liquid, is relatively slow due to the surface tension of the bubble. However, if the bubble is continuously broken, the surface tension of the bubble is reduced and a continual evaporating process occurs. This phenomenon is believed to be the cause of the high evaporation rate of the liquid fuel in the carburettor of this invention.

Another feature of the carburettor of this invention is its ability to supply dry gas to the central mixing chamber **60** in housing **42**. Since the flow of primary air in the central mixing chamber **60** is vertically upwards, the force of gravity will prevent any droplets of liquid fuel from rising high enough in the carburettor to enter the delivery tube **100**. The delivery of dry gas to the delivery tube increases the efficiency of combustion and thereby reduces the amount of unburnt gasses or pollutants which are exhausted into the air by the engine.

Means are provided for admitting secondary air into the central mixing chamber **60** to achieve the proper fuel-air ratio required for complete combustion. Such means is in the form of a secondary air filter assembly **80** mounted on an inlet tube **82** provided in opening **84** in hood **50**. The secondary air filter assembly **80** includes an upper plate **86**, a lower plate **88**, and a secondary air filter **90** positioned between plates **86** and **88**. The secondary air filter **90** is prevented from being drawn into inlet tube **82** by means of a cylindrical screen **92** which forms a continuation of tube **82**. The secondary air passes through the outer periphery of the secondary air filter **90**, through screen **92** and into tube **82**. The flow of secondary air through tube **82** is controlled by means of a butterfly valve **94** as is generally understood in the art.

Complete mixing of the dry gas-enriched primary air with the incoming secondary air within housing **42**, is achieved by means of deflector **96** positioned at the end of tube **82**. Deflector **96** includes a number of vanes **98** which are twisted to provide an outwardly-deflected circular air flow into the central mixing chamber **60** and thereby creating an increase in the turbulence of the secondary air as it combines with the fuel-enriched primary air. The deflector prevents cavitation from occurring at the upper end of the outlet tube **100**.

The flow of fuel-air mixture to the engine is controlled by means of a throttle valve **104** provided in the outlet or delivery tube **100**. The operation of the throttle valve **104** and butterfly valve **94** are both controlled in a conventional manner.

THE OPERATION OF THE CARBURETTOR

Primary air is drawn into housing **42** through primary air inlet **56** and passes upwards through primary air filter **62** where substantially all foreign particles are removed from the primary air. The filtered primary air then flows downwards through primary air chamber **58**, under baffle **54**, through fuel filter reservoir **46**, and upwards into central mixing chamber **60**. All of the primary air passes through the vaporising filter **48** provided in reservoir **46**. The vaporising filter **48** continuously breaks the primary air stream into thousands of small bubbles, reducing surface tension and increasing the air surface available for evaporation of the liquid fuel. Since the outer surface of each bubble is being constantly broken up by the vaporising filter **48** and is in constant contact with the liquid fuel as the bubble passes through the vaporising filter **48**, there is a greater opportunity for evaporation of the fuel prior to entering the central mixing chamber **60**. The vertical upward flow of the fuel-enriched primary air in the central mixing chamber, ensures that no liquid fuel droplets will be carried into the delivery tube **100**.

The fuel-enriched primary air is thoroughly mixed with the secondary air entering through tube **82** by means of the deflector system **96** which increases the turbulence of the primary and secondary air within the central mixing chamber and prevents cavitation from occurring in delivery tube **100**. The completely mixed fuel-enriched primary air and the secondary air then pass through delivery tube **100** into the inlet manifold of the engine.

The High MPG Carburettor of Thomas Ogle

US Patent 4,177,779 11th December 1979 Inventor: Thomas H. Ogle

FUEL ECONOMY SYSTEM FOR AN INTERNAL COMBUSTION ENGINE

This patent describes a carburettor design which was able to produce very high mpg figures using the gasoline available in the USA at the time but which is no longer available as the oil industry does not want functional high mpg carburettors to be available to the public.

ABSTRACT

A fuel economy system for an internal combustion engine which, when installed in a motor vehicle, overcomes the need for a conventional carburettor, fuel pump and fuel tank. The system operates by using the engine vacuum to draw fuel vapours from a vapour tank through a vapour conduit to a vapour equaliser which is positioned directly over the intake manifold of the engine. The vapour tank is constructed of heavy duty steel, or the like, to withstand the large vacuum pressure and includes an air inlet valve coupled for control to the accelerator pedal. The vapour equaliser ensures distribution of the correct mixture of air and vapour to the cylinders of the engine for combustion, and also includes its own air inlet valve coupled for control to the accelerator pedal. The system utilises vapour-retarding filters in the vapour conduit, vapour tank and vapour equaliser to deliver the correct vapour/air mixture for proper operation. The vapour tank and fuel contained in it, are heated by running the engine coolant through a conduit within the tank. Due to the extremely lean fuel mixtures used by the present invention, gas mileage in excess of one hundred miles per gallon may be achieved.

BACKGROUND OF THE INVENTION

1. Field of the Invention

The present invention is related to internal combustion engines and, more particularly, is directed towards a fuel economy system for an internal combustion engine which, when applied to a motor vehicle, overcomes the need for conventional carburettors, fuel pumps and fuel tanks, and enables vastly improved fuel consumption to be achieved.

2. Description of the Prior Art

The prior art evidences many different approaches to the problem of increasing the efficiency of an internal combustion engine. Due to the rising price of fuel, and the popularity of motor vehicles as a mode of transportation, much of the effort in this area is generally directed towards improving fuel consumption for motor vehicles. Along with increased mileage, much work has been done with a view towards reducing pollutant emissions from motor vehicles.

I am aware of the following United States patents which are generally directed towards systems for improving the efficiency and/or reducing the pollutant emissions of internal combustion engines:

Chapin	1,530,882
Crabtree et al	2,312,151
Hietrich et al	3,001,519
Hall	3,191,587
Wentworth	3,221,724
Walker	3,395,681
Holzappfel	3,633,533
Dwyre	3,713,429
Herpin	3,716,040
Gorman, Jr.	3,728,092
Alm et al	3,749,376
Hollis, Jr.	3,752,134
Buckton et al	3,759,234
Kihn	3,817,233
Shih	3,851,633

Burden, Sr.	3,854,463
Woolridge	3,874,353
Mondt	3,888,223
Brown	3,907,946
Lee, Jr.	3,911,881
Rose et al	3,931,801
Reimuller	3,945,352
Harpman	3,968,775
Naylor	4,003,356
Fortino	4,011,847
Leshner et al	4,015,569
Sommerville	4,015,570

The Chapin U.S. Pat. No. 1,530,882 discloses a fuel tank surrounded by a water jacket, the latter of which is included in a circulation system with the radiator of the automobile. The heated water in the circulation system causes the fuel in the fuel tank to readily vaporise. Suction from the inlet manifold causes air to be drawn into the tank to bubble air through the fuel to help form the desired vapour which is then drawn to the manifold for combustion.

The Buckton et al U.S. Pat. No. 3,759,234 advances a fuel system which provides supplementary vapours for an internal combustion engine by means of a canister that contains a bed of charcoal granules. The Wentworth and Hietrich et al U.S. Pat. Nos. 3,221,724 and 3,001,519 also teach vapour recovery systems which utilise filters of charcoal granules or the like.

The Dwyre U.S. Pat. No. 3,713,429 uses, in addition to the normal fuel tank and carburettor, an auxiliary tank having a chamber at the bottom which is designed to receive coolant from the engine cooling system for producing fuel vapours, while the Walker U.S. Pat. No. 3,395,681 discloses a fuel evaporator system which includes a fuel tank intended to replace the normal fuel tank, and which includes a fresh air conduit for drawing air into the tank.

The Fortino U.S. Pat. No. 4,011,847 teaches a fuel supply system wherein the fuel is vaporised primarily by atmospheric air which is released below the level of the fuel, while the Crabtree et al U.S. Pat. No. 2,312,151 teaches a vaporisation system which includes a gas and air inlet port located in a vaporising chamber and which includes a set of baffles for effecting a mixture of the air and vapour within the tank. The Mondt U.S. Pat. No. 3,888,223 also discloses an evaporative control canister for improving cold start operation and emissions, while Sommerville U.S. Pat. No. 4,015,570 teaches a liquid-fuel vaporiser which is intended to replace the conventional fuel pump and carburettor that is designed to mechanically change liquid fuel to a vapour state.

While the foregoing patents evidence a proliferation of attempts to increase the efficiency and/or reduce pollutant emissions from internal combustion engines, no practical system has yet found its way to the marketplace.

OBJECTS AND SUMMARY OF THE INVENTION

It is therefore a primary object of the present invention to provide a new and improved fuel economy system for an internal combustion engine which greatly improves the efficiency of the engine.

Another object of the present invention is to provide a unique fuel economy system for an internal combustion engine which provides a practical, operative and readily realisable means for dramatically increasing the gas mileage of conventional motor vehicles.

A further object of the present invention is to provide an improved fuel economy system for internal combustion engines which also reduces the pollutant emissions.

The foregoing and other objects are attained in accordance with one aspect of the present invention through the provision of a fuel vapour system for an internal combustion engine having an intake manifold, which comprises a tank for containing fuel vapour, a vapour equaliser mounted on and in fluid communication with the intake manifold of the engine, and a vapour conduit which connect the tank to the vapour equaliser for delivering fuel vapour from the former to the latter. The vapour equaliser includes a first valve connected to it for controlling the admission of air to the vapour equaliser, while the tank has a second valve connected to it for controlling the admission of air to the tank. A throttle controls the first and second valves so that the opening of the first valve preceeds and exceeds the opening of the second valve during operation.

In accordance with other aspects of the present invention, a filter is positioned in the vapour conduit to retard the flow of fuel vapour from the tank to the vapour equaliser. In a preferred form, the filter comprises carbon particles and may include a sponge-like collection of, for example, neoprene fibres. In a preferred embodiment, the filter comprises a substantially tubular housing positioned in series in the vapour conduit, the housing containing a central portion comprising a mixture of carbon and neoprene, and end portions comprising carbon, positioned on each side of the central portion.

In accordance with another aspect of the present invention, a second filter is positioned in the vapour equaliser for again retarding the flow of the fuel vapour to the engine intake manifold. The second filter is positioned downstream of the first valve and in a preferred form, includes carbon particles mounted in a pair of recesses formed in a porous support member. The porous support member, which may comprise neoprene, includes a first recessed portion positioned opposite a vapour inlet port in the vapour equaliser to which the vapour conduit is connected, while a second recessed portion is positioned opposite the intake manifold of the engine.

In accordance with still other aspects of the present invention, a third filter is positioned in the tank for controlling the flow of fuel vapour into the vapour conduit in proportion to the degree of vacuum in the tank. The filter more particularly comprises a mechanism for reducing the amount of fuel vapour delivered to the vapour conduit when the engine is idling and when the engine has attained a steady speed. The throttle acts to close the second valve when the engine is idling and when the engine has attained a steady speed, to thereby increase the vacuum pressure in the tank. In a preferred form, the third filter comprises a frame pivotally mounted within the tank and movable between first and second operating positions. The first operating position corresponds to an open condition of the second valve, while the second operating position corresponds to a closed condition of the second valve. The tank includes a vapour outlet port to which one end of the vapour conduit is connected, such that the second operating position of the frame places the third filter in communication with the vapour outlet port.

More particularly, the third filter in a preferred form includes carbon particles sandwiched between two layers of a sponge-like filter material, which may comprise neoprene, and screens for supporting the layered composition within the pivotable frame. A conduit is positioned on the third filter for placing it in direct fluid communication with the vapour outlet port when the frame is in its second operating position.

In accordance with yet other aspects of the present invention, a conduit is connected between the valve cover of the engine and the vapour equaliser for directing the oil blow-by to the vapour equaliser in order to minimise valve clatter. The tank also preferably includes a copper conduit positioned in the bottom of it, which is connected in series with the cooling system of the motor vehicle, for heating the tank and generating more vapour. A beneficial by-product of the circulating system reduces the engine operating temperature to further improve operating efficiency.

BRIEF DESCRIPTION OF THE DRAWINGS

Various objects, features and attendant advantages of the present invention will be more fully appreciated as the same become better understood from the following detailed description of the present invention when considered in connection with the accompanying drawings, in which:

Fig.1 is a perspective view illustrating the various components which together comprise a preferred embodiment of the present invention as installed in a motor vehicle;

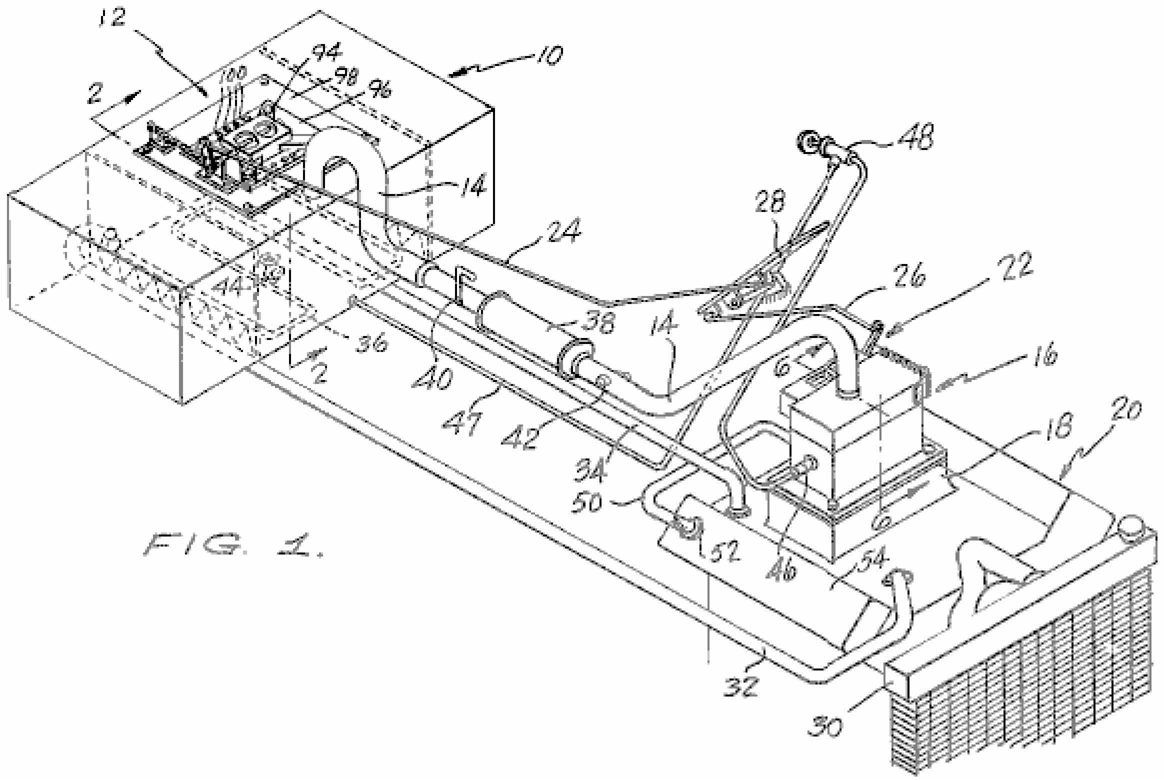

FIG. 1.

Fig.2 is a cross-sectional view of one of the components of the preferred embodiment illustrated in Fig.1 taken along line 2--2

FIG. 2.

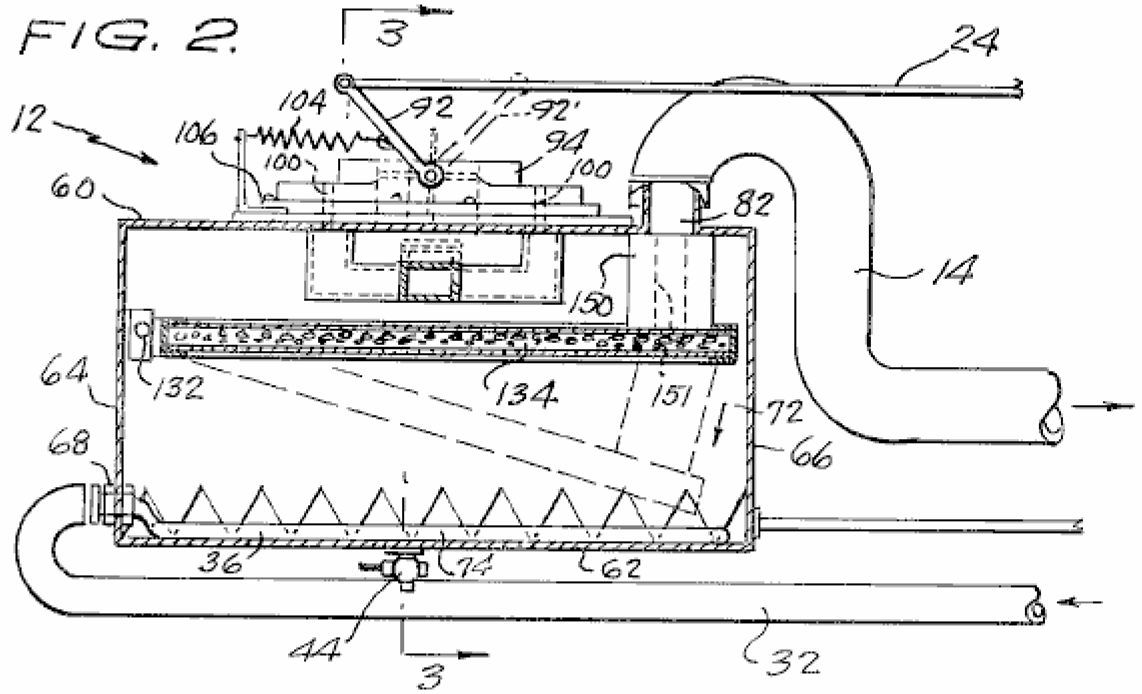

Fig.3 is a sectional view of the vapour tank illustrated in Fig.2 taken along line 3--3

FIG. 3.

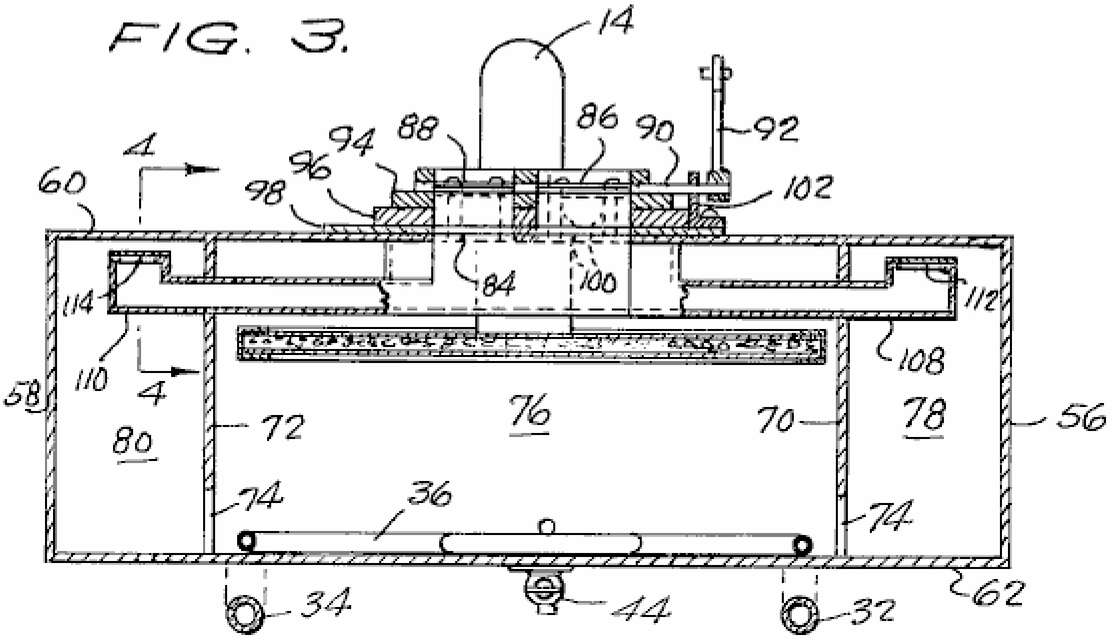

Fig.4 is an enlarged sectional view illustrating in greater detail one component of the vapour tank shown in Fig.3 taken along line 4--4

FIG. 4.

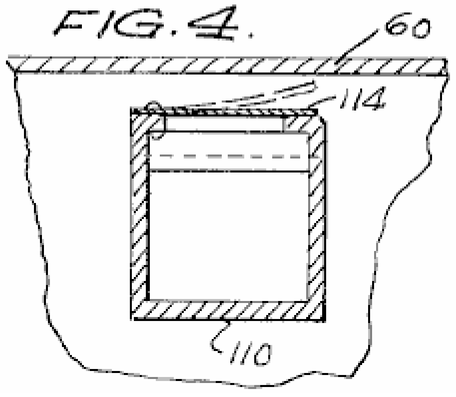

Fig.5 is a perspective, partially sectional view illustrating a filter component of the vapour tank illustrated in Fig.2

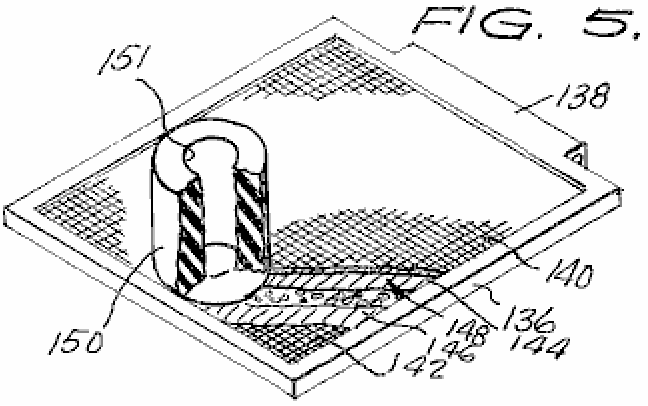

Fig.6 is a cross-sectional view of another component of the preferred embodiment of the present invention illustrated in Fig.1 taken along line 6--6

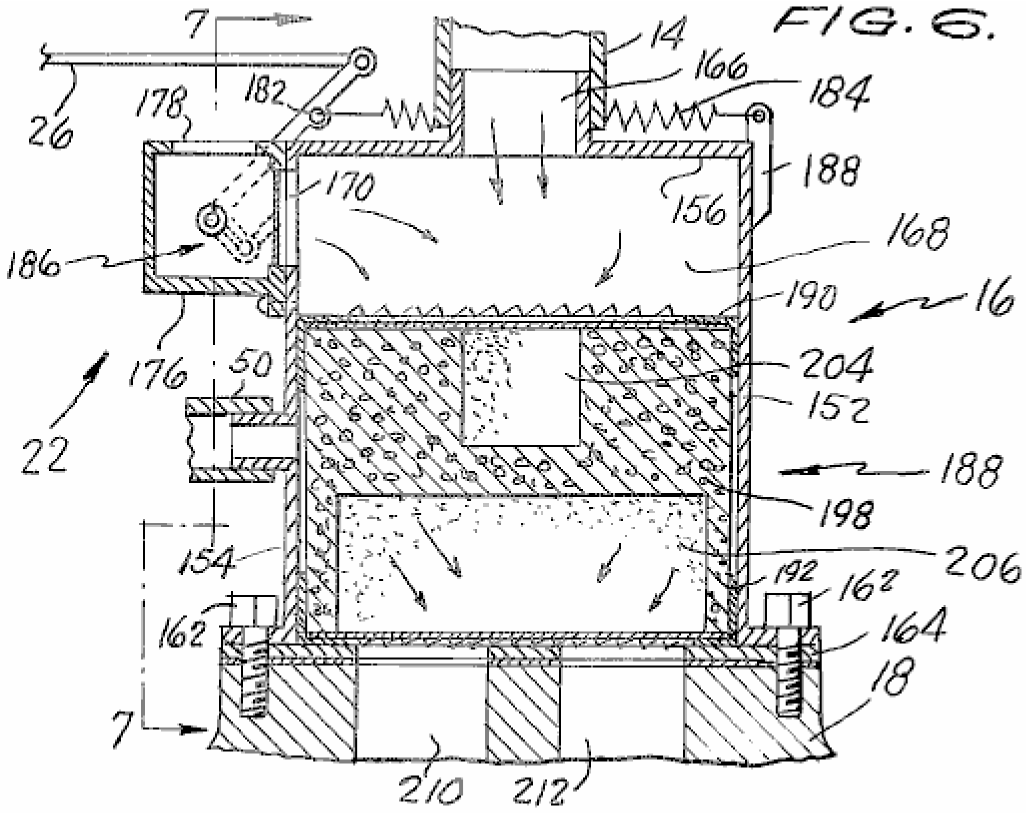

Fig.7 is a partial side, partial sectional view of the vapour equaliser illustrated in Fig.6 taken along line 7--7

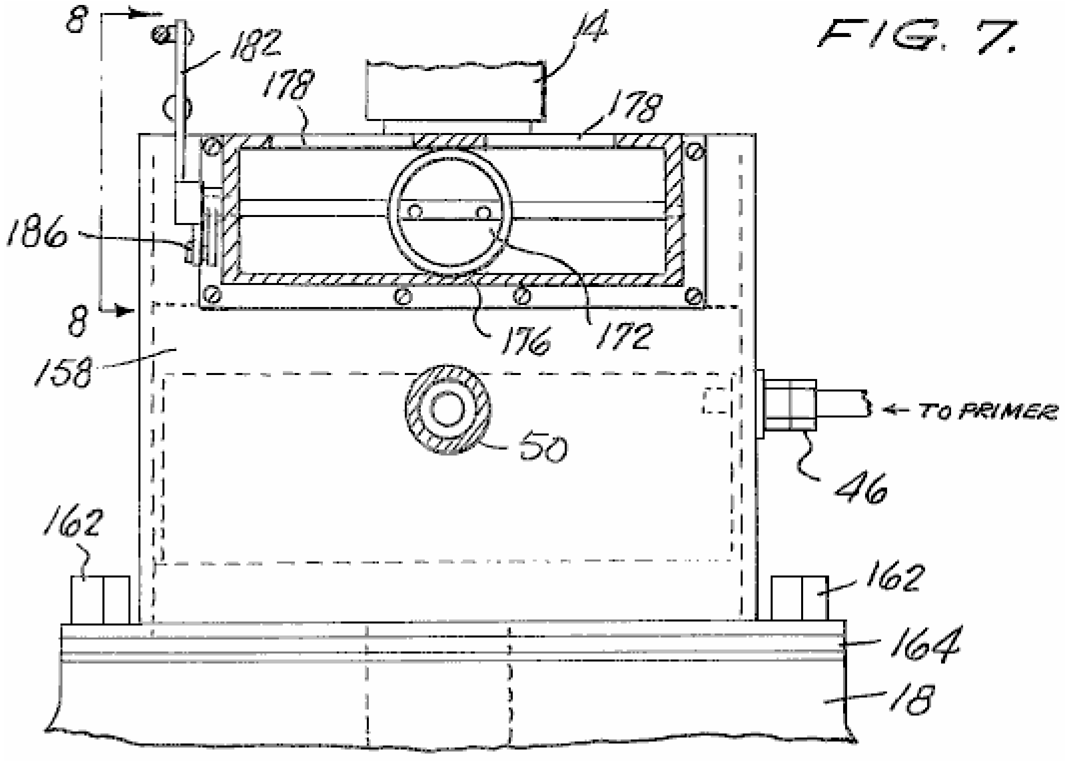

FIG. 7.

Fig.8 is a side view illustrating the throttle linkage of the vapour equaliser shown in Fig.7 taken along line 8--8

FIG. 8.

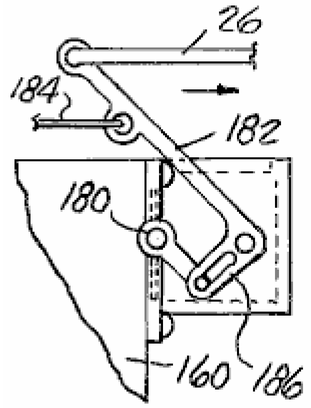

Fig.9 is a longitudinal sectional view of another filter component of the preferred embodiment illustrated in Fig.1

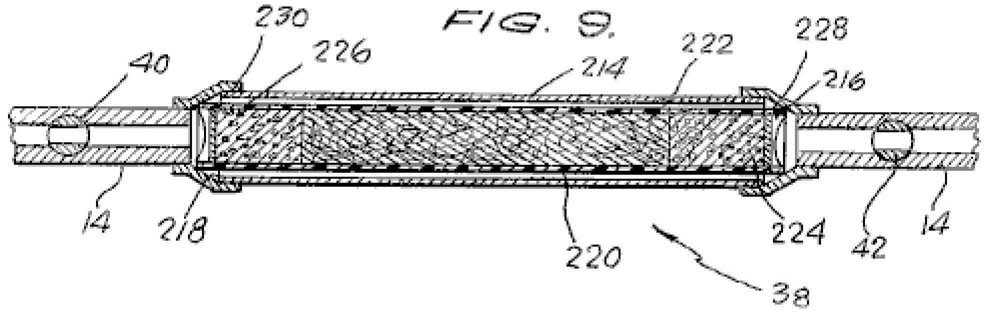

FIG. 9.

Fig.10 is a view of another component of the present invention

FIG.10.

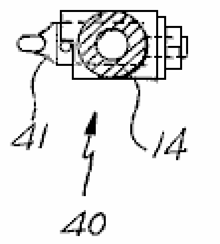

Fig.11 is an exploded, perspective view which illustrates the main components of the filter portion of the vapour equaliser of the present invention.

FIG. 11.

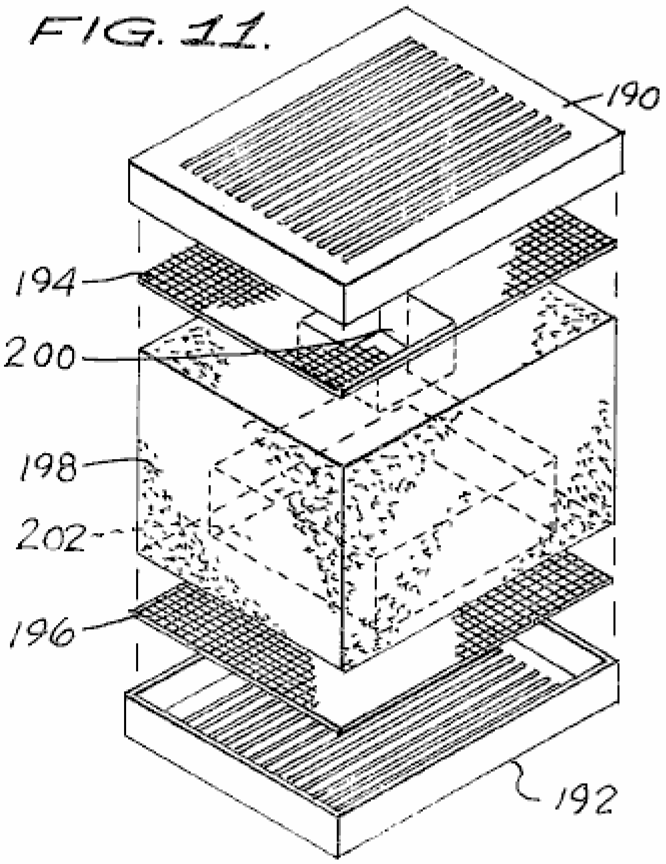

DETAILED DESCRIPTION OF THE PREFERRED EMBODIMENT

Referring now to the drawings, where parts are numbered the same in each drawing, and more particularly to **Fig.1** which illustrates a preferred embodiment of the present invention as installed in a motor vehicle.

The preferred embodiment includes as its main components a fuel vapour tank **10** in which the fuel vapour is stored and generated for subsequent delivery to the internal combustion engine **20**. On the top of fuel vapour tank **10** is mounted an air inlet control valve **12** whose structure and operation will be described in greater detail below.

The internal combustion engine **20** includes a standard intake manifold **18**. Mounted upon the intake manifold **18** is a vapour equaliser chamber **16**. Connected between the fuel vapour tank **10** and the vapour equaliser chamber **16** is a vapour conduit or hose **14** for conducting the vapours from within tank **10** to the chamber **16**.

Reference numeral **22** indicates generally an air inlet control valve which is mounted on the vapour equaliser chamber **16**. Thus, the system is provided with two separate air inlet control valves **12** and **22** which are respectively coupled via cables **24** and **26** to the throttle control for the motor vehicle which may take the form of a standard accelerator pedal **28**. The air inlet control valves **12** and **22** are synchronised in such a fashion that the opening of the air inlet control valve **22** of the vapour equaliser **16** always precedes and exceeds the opening of the air inlet control valve **12** of the fuel vapour tank **10**, for reasons which will become more clear later.

The cooling system of the vehicle conventionally includes a radiator **30** for storing liquid coolant which is circulated through the engine **20** in the well-known fashion. A pair of hoses **32** and **34** are preferably coupled into the normal heater lines from the engine **20** so as to direct heated liquid coolant from the engine **20** to a warming coil **36**, preferably constructed of copper, which is positioned within vapour tank **10**. I have found that the water circulation system consisting of hoses **32**, **34** and **36** serves three distinct functions. Firstly, it prevents the vapour tank from reaching the cold temperatures to which it would otherwise be subjected as a result of high vacuum pressure and air flow through it. Secondly, the heated coolant serves to enhance vaporisation of the fuel stored within tank **10** by raising its temperature. Thirdly, the liquid coolant, after leaving tank **10** via conduit **34**, has been cooled to the point where engine **20** may then be run at substantially lower operating temperatures to further increase efficiency and prolong the life of the engine.

Included in series with vapour conduit **14** is a filter unit **38** which is designed to retard the flow of fuel vapour from the tank **10** to the vapour equaliser **16**. The precise structure of the filter unit **38** will be described in greater detail below. A thrust adjustment valve **40** is positioned upstream of the filter unit **38** in conduit **14** and acts as a fine adjustment for the idling speed of the vehicle. Positioned on the other side of filter unit **38** in conduit **14** is a safety shut-off valve **42** which comprises a one-way valve. Starting the engine **20** will open the valve **42** to permit the engine vacuum pressure to be transmitted to tank **10**, but, for example, a backfire will close the valve to prevent a possible explosion. The tank **10** may also be provided with a drain **44** positioned at the bottom of the tank.

Positioned on the side of the vapour equaliser chamber **16** is a primer connection **46** which may be controlled by a dash mounted primer control knob **48** connected to tank **10** via conduit **47**. A conduit **50** extends from the oil breather cap opening **52** in a valve cover **54** of the engine **20** to the vapour equaliser **16** to feed the oil blow-by to the engine as a means for eliminating valve clatter. This is believed necessary due to the extreme lean mixture of fuel vapour and air fed to the combustion cylinders of the engine **20** in accordance with the present invention.

Referring now to **Fig.2** and **Fig.3**, the fuel vapour tank **10** of the present invention is illustrated in greater detail in orthogonal sectional views and is seen to include a pair of side walls **56** and **58** which are preferably comprised of heavy duty steel plate (e.g. 1/2" thick) in order to withstand the high vacuum pressures developed inside it. Tank **10** further comprises top wall **60** and bottom wall **62**, and front and rear walls **64** and **66**, respectively.

In the front wall **64** of tank **10** is positioned a coupling **68** for mating the heater hose **32** with the internal copper conduit **36**. Tank **10** is also provided with a pair of vertically oriented planar support plates **70** and **72** which are positioned somewhat inside the side walls **56** and **58** and are substantially parallel to them. Support plates **70** and **72** lend structural integrity to the tank **10** and are also provided with a plurality of openings **74** (**Fig.2**) at the bottom of them to permit fluid communication through it. The bottom of tank **10** is generally filled with from one to five gallons of fuel, and the walls of tank **10** along with plates **70** and **72** define three tank chambers **76**, **78** and **80** which are, by virtue of openings **74**, in fluid communication with one another.

In the top wall **60** of tank **10** is formed an opening **82** for placing one end of vapour conduit **14** in fluid communication with the interior chamber **76** of tank **10**. A second opening **84** is positioned in the top wall **60** of tank **10** over which the air inlet control valve **12** is positioned. The valve assembly **12** comprises a pair of conventional butterfly valves **86** and **88** which are coupled via a control rod **90** to a control arm **92**. Control arm **92** is, in turn, pivoted under the control of a cable **24** and is movable between a solid line position indicated in **Fig.2** by reference numeral **92** and a dotted line position indicated in **Fig.2** by reference numeral **92’**.

Rod **90** and valves **86** and **88** are journaled in a housing **94** having a base plate **96** which is mounted on a cover **98**. As seen in **Fig.1**, the base plate **96** includes several small air intake ports or apertures **100** formed on both sides of the butterfly valves **86** and **88**, which are utilised for a purpose to become more clear later on.

Rod **90** is also journaled in a flange **102** which is mounted to cover **98**, while a return spring **104** for control arm **92** is journaled to cover **98** via flange **106**.

Extending through the baffle and support plates 70 and **72** from the side chambers **78** and **80** of tank **10** to be in fluid communication with apertures **100** are a pair of air conduits **108** and **110** each having a reed valve **112** and **114** positioned at the ends, for controlling air and vapour flow through it. The reed valves **112** and **114** co-operage with the small apertures **100** formed in the base plate **96** to provide the proper amount of air into the tank **10** while the engine is idling and the butterfly valves **86** and **88** are closed.

Mounted to the front wall **64** of tank **10** is a pivot support member **132** for pivotally receiving a filter element which is indicated generally by reference numeral **134** and is illustrated in a perspective, partially cut away view in **Fig.5**. The unique, pivotable filter element **134** comprises a frame member **136** having a pin-receiving stub **138** extending along one side member of it. The actual filter material contained within the frame **136** comprises a layer of carbon particles **148** which is sandwiched between a pair of layers of sponge-like filter material which may, for example, be made of neoprene. The neoprene layers **144** and **146** and carbon particles **148** are maintained in place by top and bottom screens **140** and **142** which extend within, and are secured by, frame member **136**. ,A thick-walled rubber hose **150** having a central annulus **151** is secured to the top of screen **140** so as to mate with opening **82** of top wall **60** (see **Fig.2**) when the filter assembly **134** is in its solid line operative position illustrated in **Fig.2**. In the latter position, it may be appreciated that the vapour conduit **14** draws vapour fumes directly from the filter element **134**, rather than from the interior portion **76** of tank **10**. In contradistinction, when the filter element **134** is in its alternate operative position, indicated by dotted lines in **Fig.2**, the vapour conduit **14** draws fumes mainly from the interior portions **76**, **78** and **80** of tank **10**.

Fig.4 is an enlarged view of one of the reed valve assemblies **114** which illustrates the manner in which the valve opens and closes in response to the particular vacuum pressure created within the tank **10**. Valves **112** and **114** are designed to admit just enough air to the tank **10** from the apertures **100** at engine idle to prevent the engine from stalling.

Referring now to **Fig.6**, **Fig.7** and **Fig.8**, the vapour equaliser chamber **16** of the present invention is seen to include front and rear walls **152** and **154**, respectively, a top wall **156**, a side wall **158**, and another side wall **160**. The vapour equaliser chamber **16** is secured to the manifold **18** as by a plurality of bolts **162** under which may be positioned a conventional gasket **164**.

In the top wall **156** of the vapour equaliser **16** is formed an opening **166** for communicating the outlet end of vapour conduit **14** with a mixing and equalising chamber **168**. Adjacent to the mixing and equalising chamber **168** in wall **154** is formed another opening **170** which communicates with the outside air via opening **178** formed in the upper portion of housing **176**. The amount of air admitted through openings **178** and **170** is controlled by a conventional butterfly valve **172**. Butterfly valve **172** is rotated by a control rod **180** which, in turn, is coupled to a control arm **182**. Cable **26** is connected to the end of control arm **182** furthest from the centreline and acts against the return bias of spring **184**, the latter of which is journaled to side plate **152** of vapour equaliser **16** via an upstanding flange **188**. Reference numeral **186** indicates generally a butterfly valve operating linkage, as illustrated more clearly in **Fig.8**, and which is of conventional design as may be appreciated by a person skilled in the art.

Positioned below mixing and equalising chamber **168** is a filter unit which is indicated generally by reference numeral **188**. The filter unit **188**, which is illustrated in an exploded view in **Fig.11**, comprises a top plastic fluted cover **190** and a bottom plastic fluted cover **192**. Positioned adjacent to the top and bottom covers **190** and **192** is a pair of screen mesh elements **194** and **196**, respectively. Positioned between the screen mesh elements **194** and **196** is a support member **198** which is preferably formed of a sponge-like filter material, such as, for example, neoprene. The support member **199** has formed on its upper and lower surfaces, a pair of receptacles **200** and **202**, whose diameters are sized similarly to the opening **166** in top plate **156** and the openings formed in the intake manifold **18** which are respectively indicated by reference numerals **210** and **212** in **Fig.6**.

Positioned in receptacles **200** and **202** are carbon particles **204** and **206**, respectively, for vapour retardation and control purposes.

Referring now to **Fig.9**, the filter unit **38** mounted in vapour conduit **14** is illustrated in a longitudinal sectional view and is seen to comprise an outer flexible cylindrical hose **214** which is adapted to connect with hose **14** at both ends by a pair of adapter elements **216** and **218**. Contained within the outer flexible hose **214** is a cylindrical container **220**, preferably of plastic, which houses, in its centre, a mixture of carbon and neoprene filter fibres **222**. At both ends of the mixture **222** are deposited carbon particles **224** and **226**, while the entire filtering unit is held within the container **220** by end screens **228** and **230** which permit passage of vapours through it while holding the carbon particles **224** and **226** in place.

Fig.10 illustrates one form of the thrust adjustment valve **40** which is placed within line **14**. This valve simply controls the amount of fluid which can pass through conduit **14** via a rotating valve member **41**.

In operation, the thrust adjustment valve **40** is initially adjusted to achieve as smooth an idle as possible for the particular motor vehicle in which the system is installed. The emergency shut-off valve **42**, which is closed when the engine is off, generally traps enough vapour between it and the vapour equaliser **16** to start the engine **20**. Initially, the rear intake valves **12** on the tank **10** are fully closed, while the air intake valves **22** on the equaliser **16** are open to admit a charge of air to the vapour equaliser prior to the vapour from the tank, thus forcing the pre-existing vapour in the vapour equaliser into the manifold. The small apertures **100** formed in base plate **96** on tank **10** admit just enough air to actuate the reed valves to permit sufficient vapour and air to be drawn through vapour conduit **14** and equaliser **16** to the engine **20** to provide smooth idling. The front air valves **22** are always set ahead of the rear air valves **12** and the linkages **24** and **26** are coupled to throttle pedal **28** such that the degree of opening of front valves **22** always exceeds the degree of opening of the rear valves **12**.

Upon initial starting of the engine **20**, due to the closed condition of rear valves **12**, a high vacuum pressure is created within tank **10** which causes the filter assembly **134** positioned in tank **10** to rise to its operative position indicated by solid outline in **Fig.2**. In this manner, a relatively small amount of vapour will be drawn directly from filter **134** through vapour conduit **14** to the engine to permit the latter to run on an extremely lean mixture.

Upon initial acceleration, the front air intake valve **22** will open further, while the rear butterfly assembly **12** will begin to open. The latter action will reduce the vacuum pressure within tank **10** whereby the filter assembly **134** will be lowered to its alternate operating position illustrated in dotted outline in **Fig.2**. In this position, the lower end of the filter assembly **134** may actually rest in the liquid fuel contained within the tank **10**. Accordingly, upon acceleration, the filter assembly **134** is moved out of direct fluid communication with the opening **82** such that the vapour conduit **14** then draws fuel vapour and air from the entire tank **10** to provide a richer combustion mixture to the engine, which is necessary during acceleration.

When the motor vehicle attains a steady speed, and the operator eases off the accelerator pedal **28**, the rear butterfly valve assembly **12** closes, but the front air intake **22** remains open to a certain degree. The closing of the rear air intake **12** increases the vacuum pressure within tank **10** to the point where the filter assembly **134** is drawn up to its initial operating position. As illustrated, in this position, the opening **82** is in substantial alignment with the aperture **151** of hose **150** to place the filter unit **134** in direct fluid communication with the vapour conduit **14**, thereby lessening the amount of vapour and air mixture fed to the engine. Any vapour fed through conduit **14** while the filter **134** is at this position is believed to be drawn directly off the filter unit itself.

I have been able to obtain extremely high mpg figures with the system of the present invention installed on a V-8 engine of a conventional 1971 American-made car. In fact, mileage rates in excess of one hundred miles per US gallon have been achieved with the present invention. The present invention eliminates the need for conventional fuel pumps, carburettors, and fuel tanks, thereby more than offsetting whatever the components of the present invention might otherwise add to the cost of a car. The system may be constructed with readily available components and technology, and may be supplied in kit form as well as original equipment.

Obviously, numerous modifications and variations of the present invention are possible in light of the above teachings. For example, although described in connection with the operation of a motor vehicle, the present invention may be universally applied to any four-stroke engine for which its operation depends upon the internal combustion of fossil fuels. Therefore, it is to be understood that within the scope of the appended claims the invention may be practiced otherwise than as specifically described here.

CLAIMS

1. A fuel vapour system for an internal combustion engine having an intake manifold, which comprises:
  (a) A tank for containing fuel vapour;
  (b) A vapour equaliser mounted on and in fluid communication with the intake manifold of the engine;
  (c) A vapour conduit connecting the tank to the vapour equaliser for delivering fuel vapour from the former to the latter;
  (d) A vapour equaliser having a valve connected to it for controlling the admission of air to the vapour equaliser;
  (e) A tank having a second valve connected to it for controlling the admission of air to the tank;
  (f) A throttle for controlling the first and second valves so that the opening of the first valve precedes and exceeds the opening of the second valve.

2. The fuel vapour system as set forth in claim 1, further comprising a filter positioned in the vapour conduit for retarding the flow of fuel vapour from the tank to the vapour equaliser.

3. The fuel vapour system as set forth in claim 2, where the filter comprises carbon particles.

4. The fuel vapour system as set forth in claim 2, where the filter comprises carbon particles and neoprene fibres.

5. The fuel vapour system as set forth in claim 2, where the filter comprises a substantially tubular housing positioned in series in the vapour conduit, the housing containing a central portion comprising a mixture of carbon and neoprene and end portions comprising carbon positioned on each side of the central portion.

6. The fuel vapour system as set forth in claim 1, further comprising a filter positioned in the vapour equaliser, for retarding the flow of the fuel vapour to the engine intake manifold.

7. The fuel vapour system as set forth in claim 6, where the filter is positioned downstream of the first valve.

8. The fuel vapour system as set forth in claim 7, where the filter comprises carbon particles.

9. The fuel vapour system as set forth in claim 8, where the filter further comprises a porous support member having first and second recessed portions for containing the carbon particles, the first recessed portion being positioned opposite a vapour inlet port in the vapour equaliser to which the vapour conduit is connected, the second recessed portion being positioned opposite the intake manifold of the engine.

10. The fuel vapour system as set forth in claim 9, where the porous support member is comprised of neoprene.

11. The fuel vapour system as set forth in claim 1, with a further filter positioned in the tank for controlling the flow of fuel vapour into the vapour conduit in proportion to the degree of vacuum in the tank.

12. The fuel vapour system as set forth in claim 11, where the filter incorporates a method for reducing the amount of fuel vapour delivered to the vapour conduit when the engine is idling and when the engine has attained a steady speed.

13. The fuel vapour system as set forth in claim 12, where the throttle acts to close the second valve when the engine is idling and when the engine has attained a steady speed to thereby increase the vacuum pressure in the tank.

14. The fuel vapour system as set forth in claim 13, where the filter comprises a frame pivotally mounted within the tank and movable between first and second operating positions, the first operating position corresponding to an open condition of the second valve, said second operating position corresponding to a closed condition of the second valve.

15. The fuel vapour system as set forth in claim 14, where the tank includes a vapour outlet port to which one end of the vapour conduit is connected, and where the second operating position of the frame places the filter in direct fluid communication with the vapour outlet port.

16. The fuel vapour system as set forth in claim 15, where the filter includes carbon particles.

17. The fuel vapour system as set forth in claim 16, where the filter includes neoprene filter material.

18. The fuel vapour system as set forth in claim 17, where the filter comprises a layer of carbon particles sandwiched between two layers of neoprene filter material, and a screen for supporting them within the pivotable frame.

19. The fuel vapour system as set forth in claim 18, further comprising a mechanism positioned on the filter for placing the filter in direct fluid communication with the vapour outlet port when the frame is in the second operating position.

20. A fuel vapour system for an internal combustion engine having an intake manifold, which comprises:
(a) A tank for containing fuel vapour;
(b) A vapour equaliser mounted on, and in fluid communication with, the intake manifold of the engine;
(c) A vapour conduit connecting the tank to the vapour equaliser for delivering fuel vapour from the former to the latter;
(d) A vapour equaliser having a first valve connected to it for controlling the admission of air to the vapour equaliser;
(e) A tank having a second valve connected to it for controlling the admission of air to the tank;
(f) A filter positioned in the vapour conduit for retarding the flow of the fuel vapour from the tank to the vapour equaliser means.

21. The fuel vapour system as set forth in claim 20, where the filter comprises a substantially tubular housing positioned in series in the vapour conduit, the housing containing a central portion comprising a mixture of carbon and neoprene and end portions comprising carbon positioned on each side of the central portion.

22. A fuel vapour system for an internal combustion engine having an intake manifold, which comprises:
(a) A tank for containing fuel vapour;
(b) A vapour equaliser mounted on and in fluid communication with the intake manifold of the engine;
(c) A vapour conduit connecting the tank to the vapour equaliser for delivering fuel vapour from the former to the latter;
(d) The vapour equaliser having a first valve connected to it for controlling the admission of air to the vapour equaliser;
(e) The tank having a second valve connected to it for controlling the admission of air to the tank;

(f) A filter positioned in the vapour equaliser for retarding the flow of the fuel vapour to the engine intake manifold.

23. The fuel vapour system as set forth in claim 22, where the filter is positioned downstream of the first valve, the filter comprises carbon particles and a porous support member having first and second recessed portions for containing the carbon particles, the first recessed portion being positioned opposite a vapour inlet port in the vapour equaliser to which the vapour conduit is connected, the second recessed portion being positioned opposite the intake manifold of the engine, and where the porous support member is comprised of neoprene.

The Permanent Magnet Motor of Stephen Kundel

US Patent 7,151,332 19th December 2006 Inventor: Stephen Kundel

MOTOR HAVING RECIPROCATING AND ROTATING PERMANENT MAGNETS

This patent describes a motor powered mainly by permanent magnets. This system uses a rocking frame to position the moving magnets so that they provide a continuous turning force on the output shaft.

ABSTRACT

A motor which has a rotor supported for rotation about an axis, and at least one pair of rotor magnets spaced angularity about the axis and supported on the rotor, at least one reciprocating magnet, and an actuator for moving the reciprocating magnet cyclically toward and away from the pair of rotor magnets, and consequently rotating the rotor magnets relative to the reciprocating magnet.

US Patent References:

0561144	June, 1896	Trudeau
1724446	August, 1929	Worthington
2790095	April, 1957	Peek et al.
3469130	September, 1969	Jines et al.
3703653	November, 1972	Tracy
3811058	May, 1974	Kiniski
3879622	April, 1975	Ecklin
3890548	June, 1975	Gray
3899703	August, 1975	Kinnison
3967146	June, 1976	Howard
3992132	November, 1976	Putt
4011477	March, 1977	Scholin
4151431	April, 1979	Johnson
4179633	December, 1979	Kelly
4196365	April, 1980	Presley
4267647	May, 1981	Anderson et al.
4629921	December, 1986	Gavaletz
4751486	June, 1988	Minato
5402021	March, 1995	Johnson
5594289	January, 1997	Minato
5634390	June, 1997	Takeuchi et al.
5751083	May, 1998	Tamura et al.
5925958	July, 1999	Pirc
6169343	January, 2001	Rich, Sr.
6343419	February, 2002	Litman et al.
6841909	January, 2005	Six
20020167236	November, 2002	Long
20040140722	July, 2004	Long

BACKGROUND OF THE INVENTION

This invention relates to the field of motors. More particularly, it pertains to a motor whose rotor is driven by the mutual attraction and repulsion of permanent magnets located on the rotor and an oscillator.

Various kinds of motors are used to drive a load. For example, hydraulic and pneumatic motors use the flow of pressurised liquid and gas, respectively, to drive a rotor connected to a load. Such motors must be continually supplied with pressurised fluid from a pump driven by energy converted to rotating power by a prime mover, such as an internal combustion engine. The several energy conversion processes, flow losses and pumping losses decrease the operating efficiency of motor systems of this type.

Conventional electric motors employ the force applied to a current carrying conductor placed in a magnetic field. In a d. c. motor the magnetic field is provided either by permanent magnets or by field coils wrapped around clearly defined field poles on a stator. The conductors on which the force is developed are located on a rotor and supplied with electric current. The force induced in the coil is used to apply rotor torque, whose magnitude varies with the magnitude of the current and strength of the magnetic field. However, flux leakage, air gaps, temperature effects, and the counter-electromotive force reduce the efficiency of the motor.

Permanent dipole magnets have a magnetic north pole, a magnetic south pole, and magnetic fields surrounding each pole. Each magnetic pole attracts a pole of opposite magnetic polarity. Two magnetic poles of the same polarity repel each other. It is desired that a motor be developed such that its rotor is driven by the mutual attraction and repulsion of the poles of permanent magnets.

SUMMARY OF THE INVENTION

A motor according to the present invention includes a rotor supported for rotation about an axis, a first pair of rotor magnets including first and second rotor magnets spaced angularly about the axis and supported on the rotor, a reciprocating magnet, and an actuator for moving the reciprocating magnet cyclically toward and away from the first pair of rotor magnets, and cyclically rotating the first pair of rotor magnets relative to the reciprocating magnet. Preferably the motor includes a second pair of rotor magnets supported on the rotor, spaced axially from the first pair of rotor magnets, the second pair including a third rotor magnet and a fourth rotor magnet spaced angularly about the axis from the third rotor magnet. The reciprocating magnet is located axially between the first and second rotor magnet pairs, and the actuator cyclically moves the reciprocating magnet toward and away from the first and second pairs of rotor magnets.

The magnets are preferably permanent dipole magnets. The poles of the reciprocating magnet are arranged such that they face in opposite lateral directions.

The motor can be started by manually rotating the rotor about its axis. Rotation continues by using the actuator to move the reciprocating magnet toward the first rotor magnet pair and away from the second rotor magnet pair when rotor rotation brings the reference pole of the first rotor magnet closer to the opposite pole of the reciprocating magnet, and the opposite pole of the second rotor magnet closer to the reference pole of the reciprocating magnet. Then the actuator moves the reciprocating magnet toward the second rotor magnet pair and away from the first rotor magnet pair when rotor rotation brings the reference pole of the third rotor magnet closer to the opposite pole of the reciprocating magnet, and the opposite pole of the fourth rotor magnet closer to the reference pole of the reciprocating magnet.

A motor according to this invention requires no power source to energise a field coil because the magnetic fields of the rotor and oscillator are produced by permanent magnets. A nine-volt DC battery has been applied to an actuator switching mechanism to alternate the polarity of a solenoid at the rotor frequency. The solenoid is suspended over a permanent magnet of the actuator mechanism such that rotor rotation and the alternating polarity of a solenoid causes the actuator to oscillate the reciprocating magnet at a frequency and phase relation that is most efficient relative to the rotor rotation.

The motor is lightweight and portable, and requires only a commercially available portable d. c. battery to power an actuator for the oscillator. No motor drive electronics is required. Operation of the motor is practically silent.

Various objects and advantages of this invention will become apparent to those skilled in the art from the following detailed description of the preferred embodiment, when read in light of the accompanying drawings.

BRIEF DESCRIPTION OF THE DRAWINGS

These and other advantages of the present invention will become apparent to those skilled in the art from the following detailed description of a preferred embodiment when considered in the light of the accompanying drawings in which:

Figure 1A

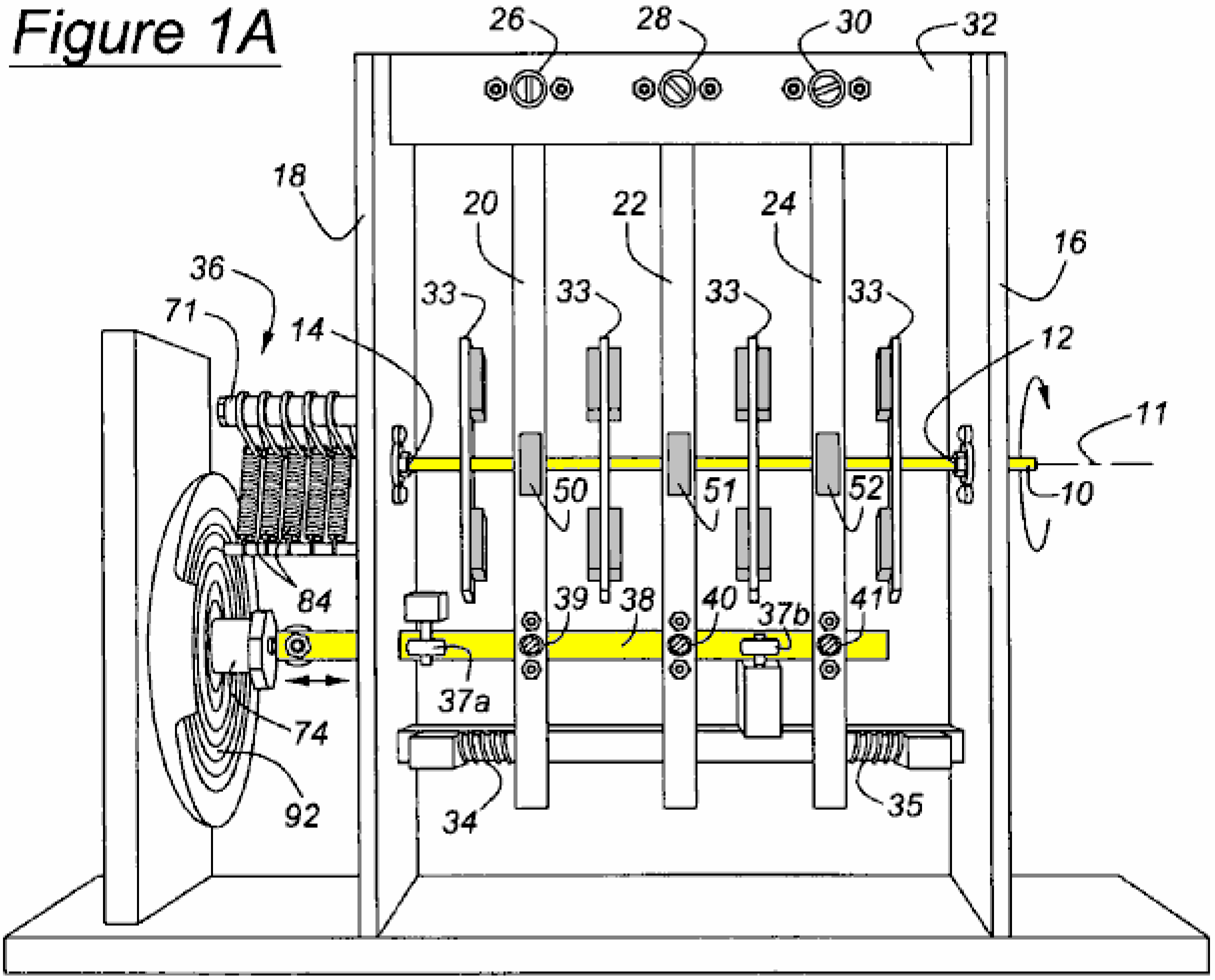

Fig.1A is a side view of a motor according to this invention;

Figure 1B

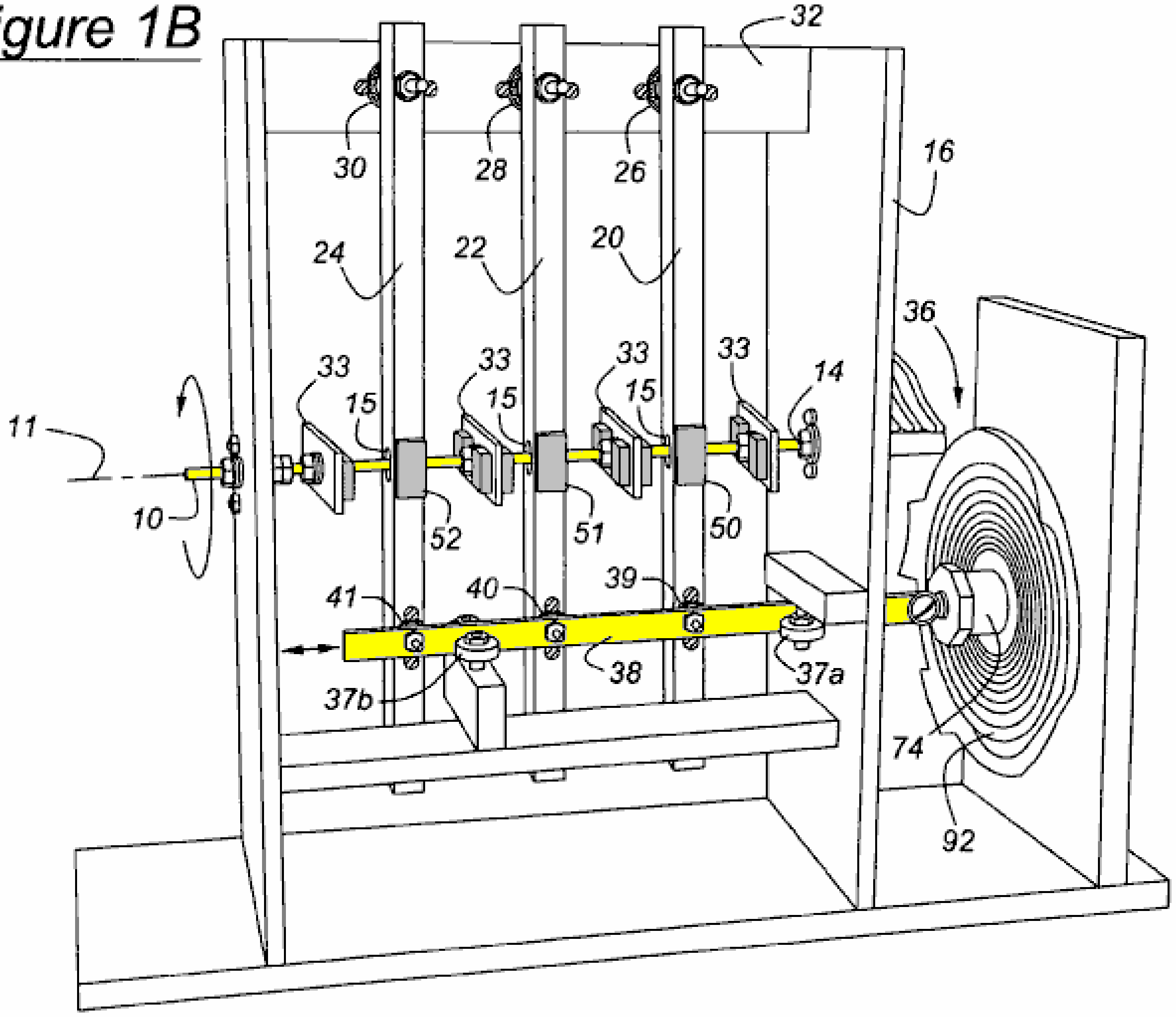

Fig.1B is a perspective view of the motor of **Fig.1A**

Figure 2

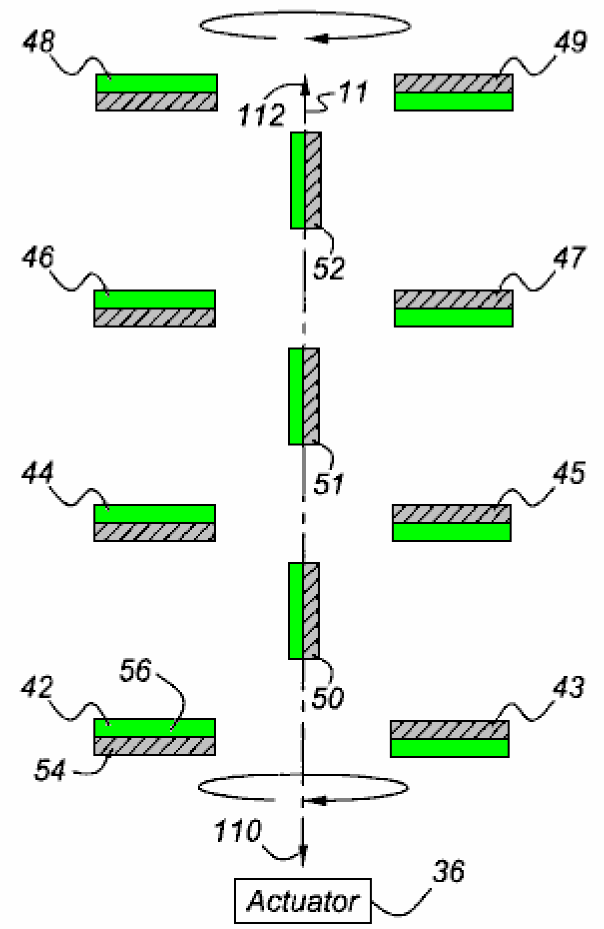

Fig.2 is a top view of the of motor of **Fig.1A** and **Fig.1B** showing the rotor magnets disposed horizontally and the reciprocating magnets located near one end of their range of travel

Figure 3

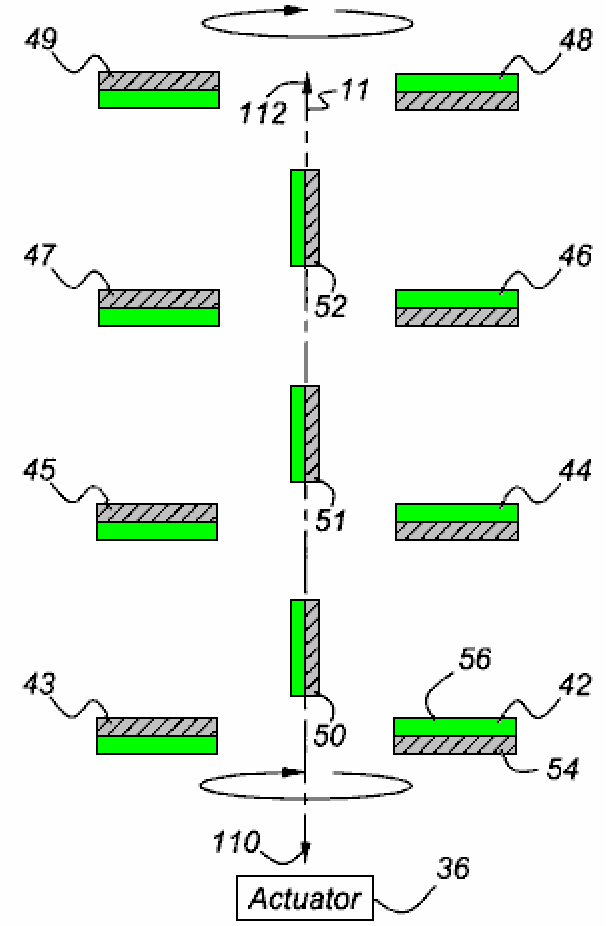

Fig.3 is a top view of the motor of **Fig.2** showing the rotor magnets rotated one-half revolution from the position shown in **Fig.2**, and the reciprocating magnets located near the opposite end of their range of travel

Figure 4

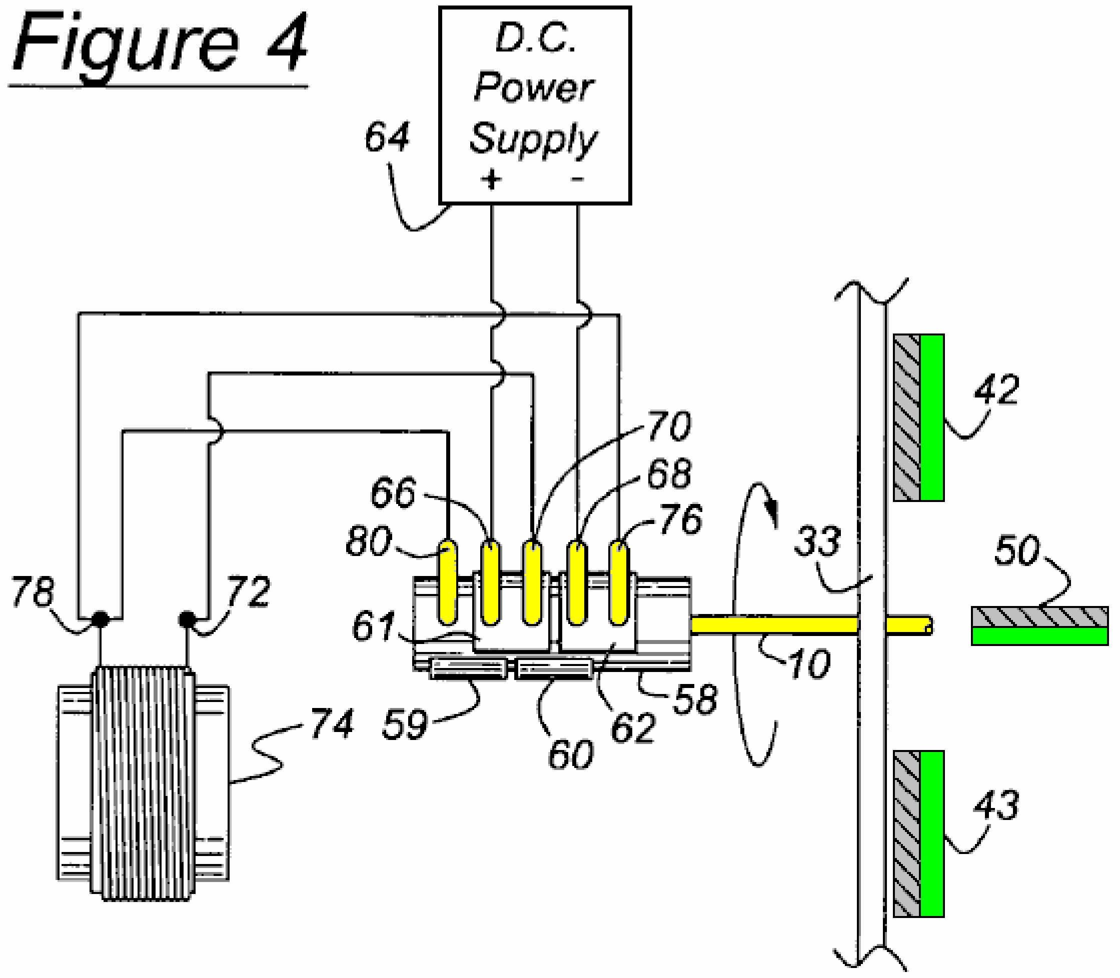

Fig.4 is a schematic diagram of a first state of the actuator switching assembly of the motor of **Fig.1**

Figure 5

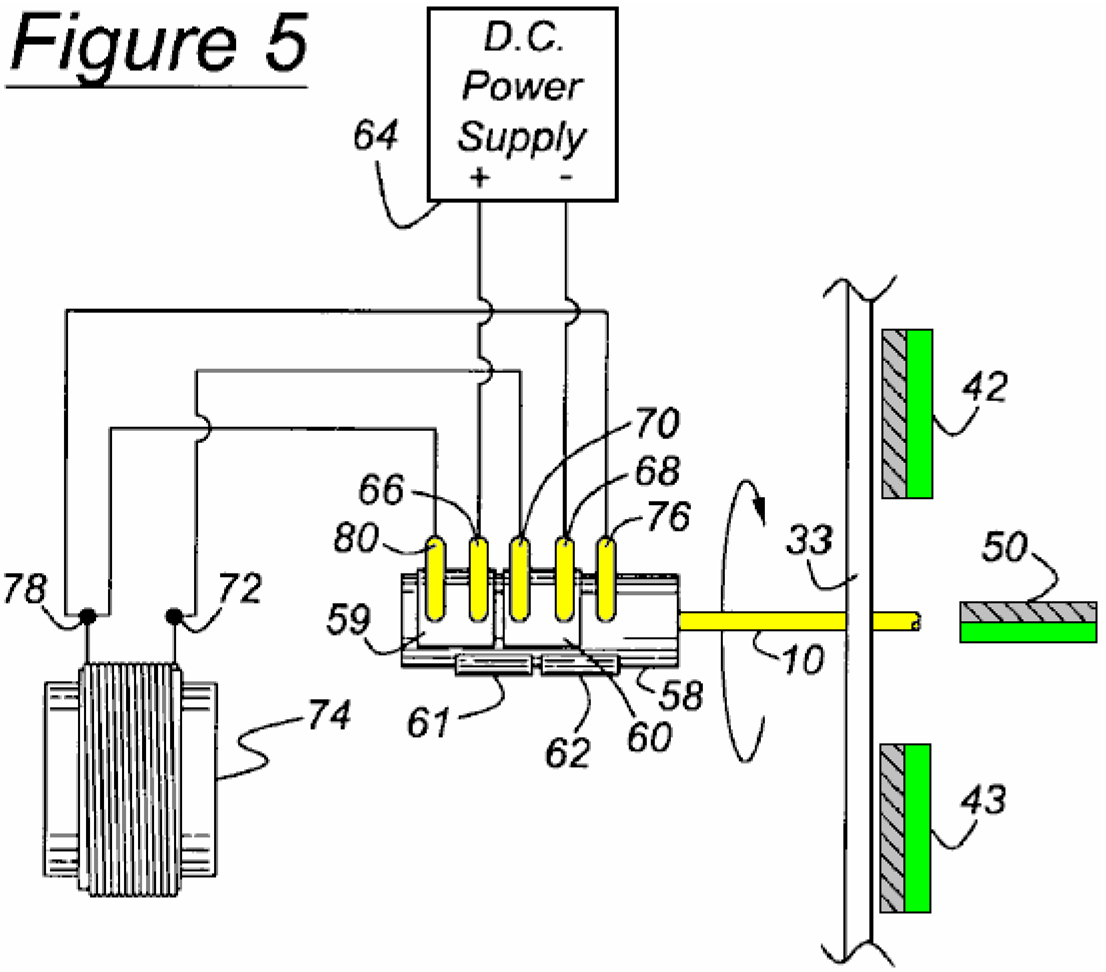

Fig.5 is a schematic diagram of a second state of the actuator switching assembly of the motor of **Fig.1**

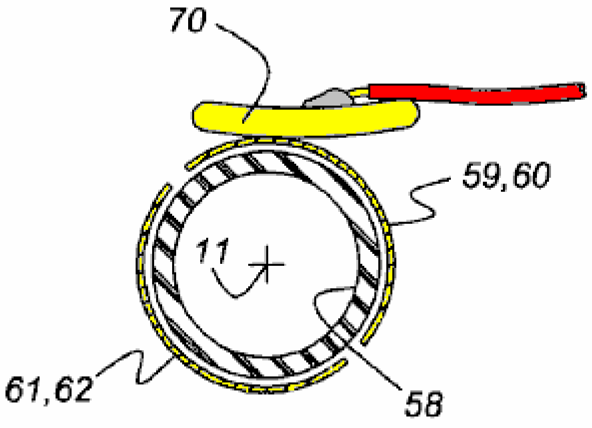

Figure 6

Fig.6 is cross sectional view of a sleeve shaft aligned with the rotor shaft showing a contact finger and bridge contact plates of the switching assembly

Figure 7

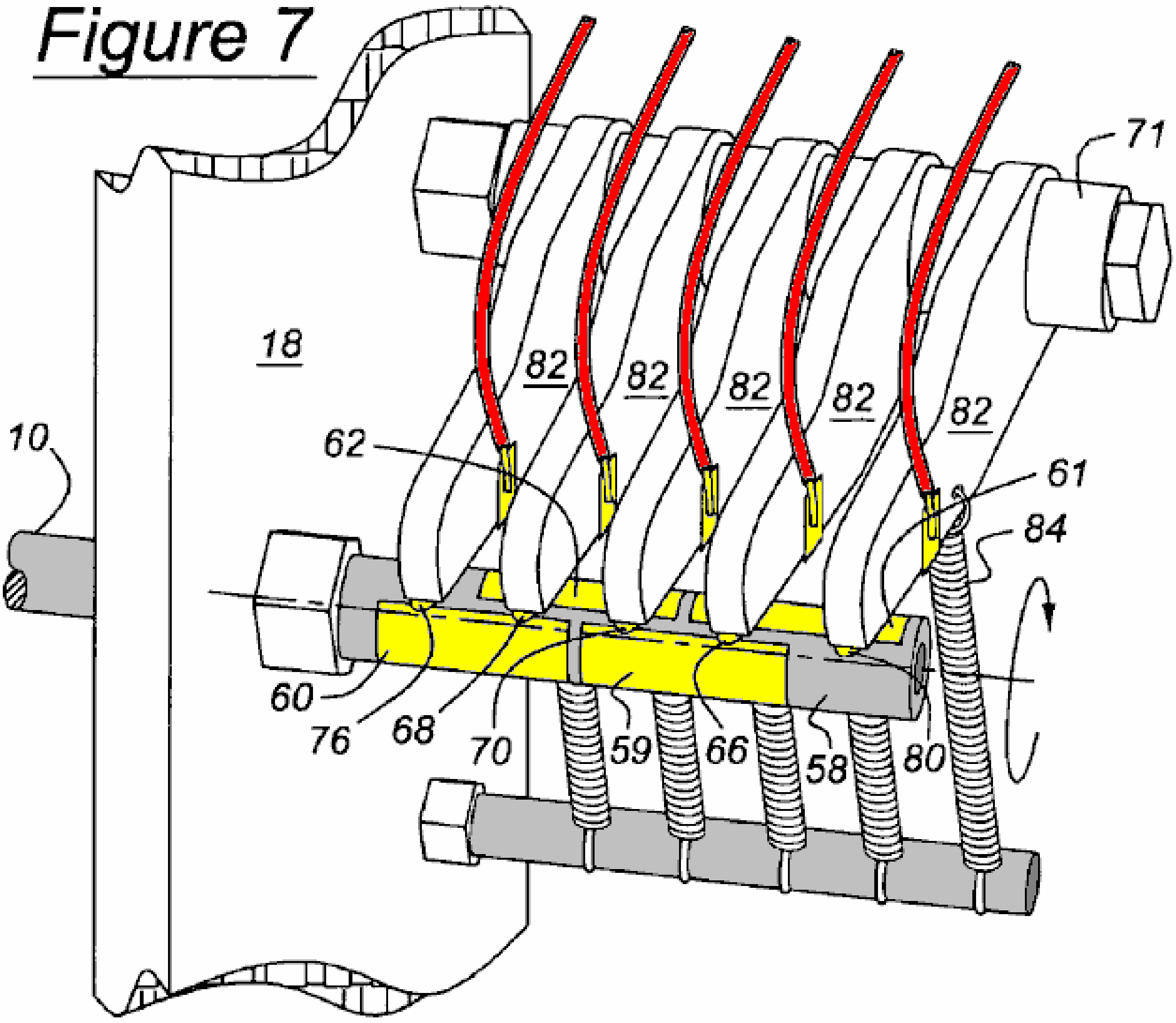

Fig.7 is an isometric view showing the switching contact fingers secured on pivoting arms and seated on the bridge connectors of the switching assembly

Figure 8

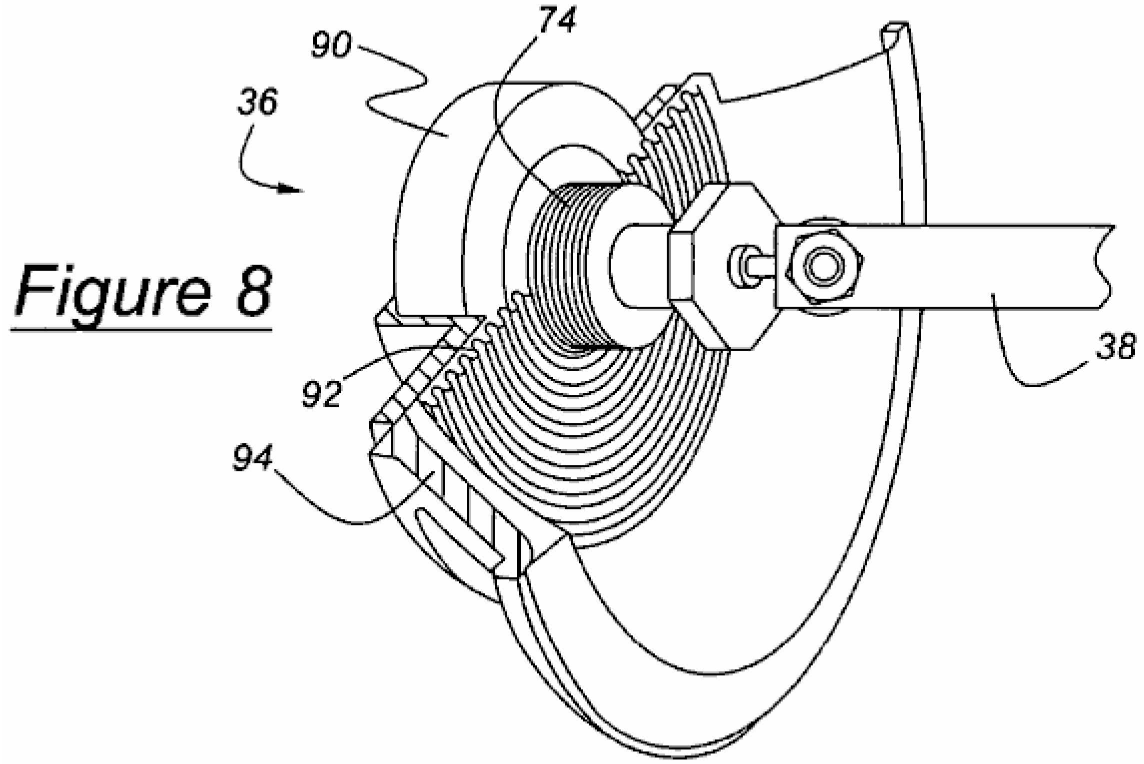

Fig.8 is isometric cross sectional view showing a driver that includes a solenoid and permanent magnet for oscillating the actuator arm in response to rotation of the rotor shaft

Figure 9

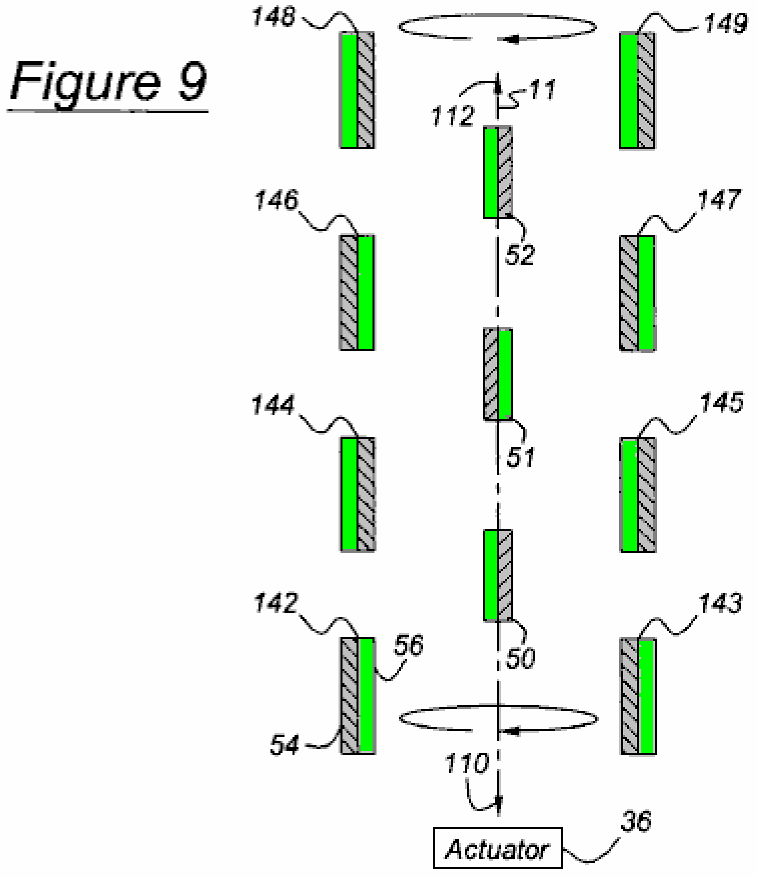

Fig.9 is a top view of an alternate arrangement of the rotor magnets, wherein they are disposed horizontally and rotated ninety degrees from the position shown in **Fig.2**, and the reciprocating magnets are located near an end of their range of displacement

Figure 10

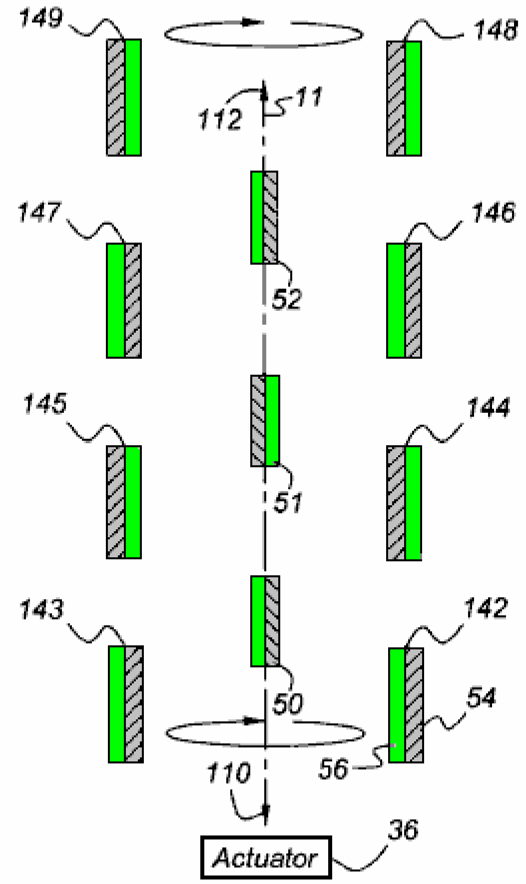

Fig.10 is a top view showing the rotor magnet arrangement of **Fig.9** rotated one-half revolution from the position shown in **Fig.9**, and the reciprocating magnets located near the opposite end of their range of displacement; and

Figure 11

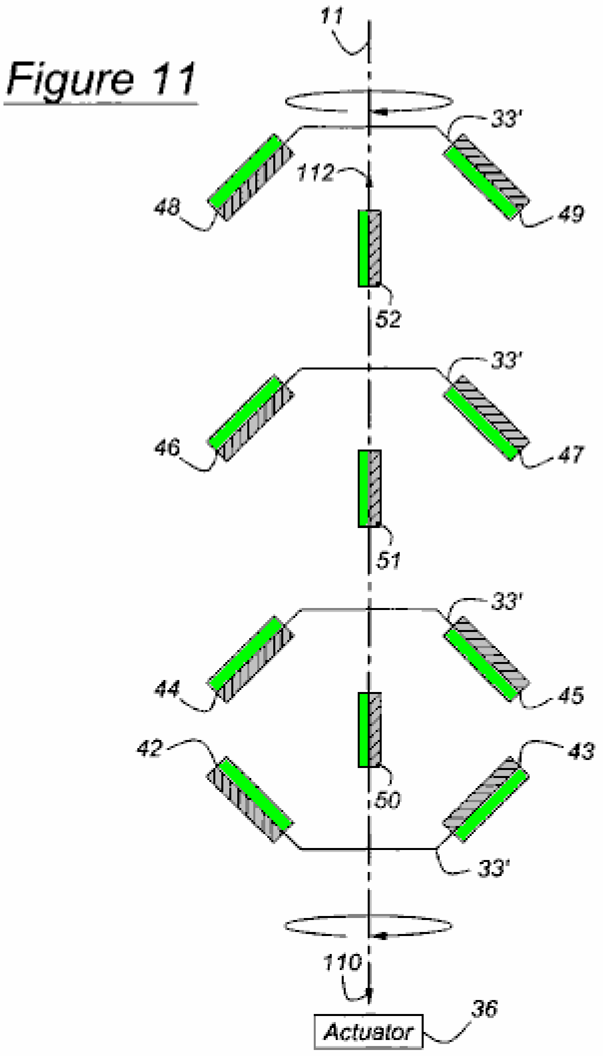

Fig.11 is a top view of the motor showing a third arrangement of the rotor magnets, which are canted with respect to the axis and the reciprocating magnets.

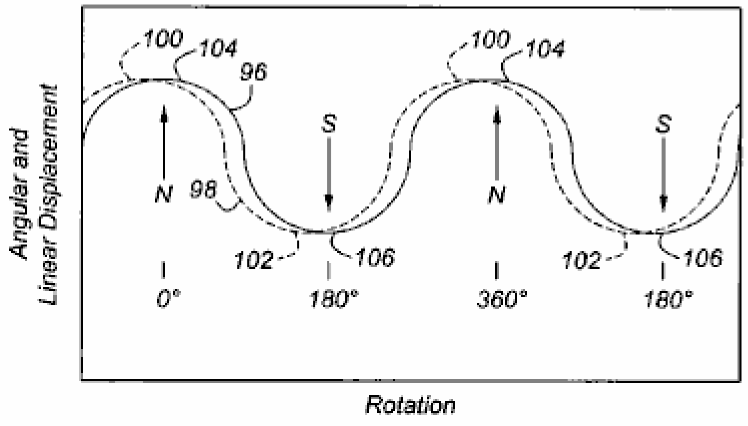

Figure 12

Fig.12 is a graph showing the angular displacement of the rotor shaft **10** and linear displacement of the reciprocating magnets

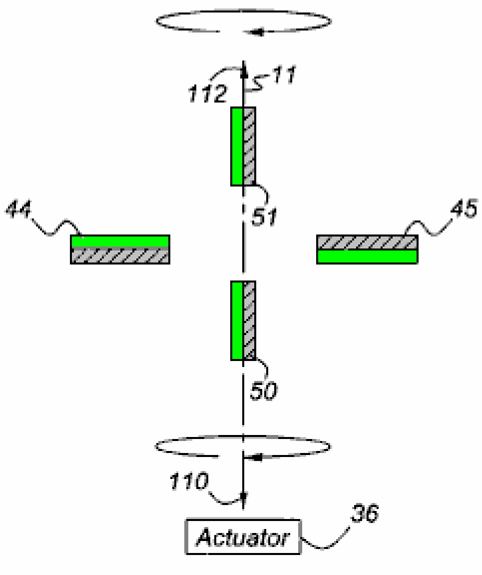

Figure 13

Fig.13 is a top view of a pair of rotor magnets disposed horizontally and reciprocating magnets located near one end of their range of travel

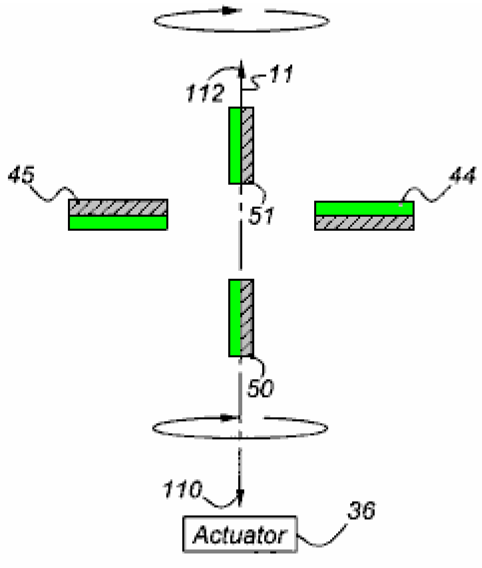

Figure 14

Fig.14 is a top view of the motor of **Fig.13** showing the rotor magnets rotated one-half revolution from the position shown in **Fig.13**, and the reciprocating magnets located near the opposite end of their range of travel; and

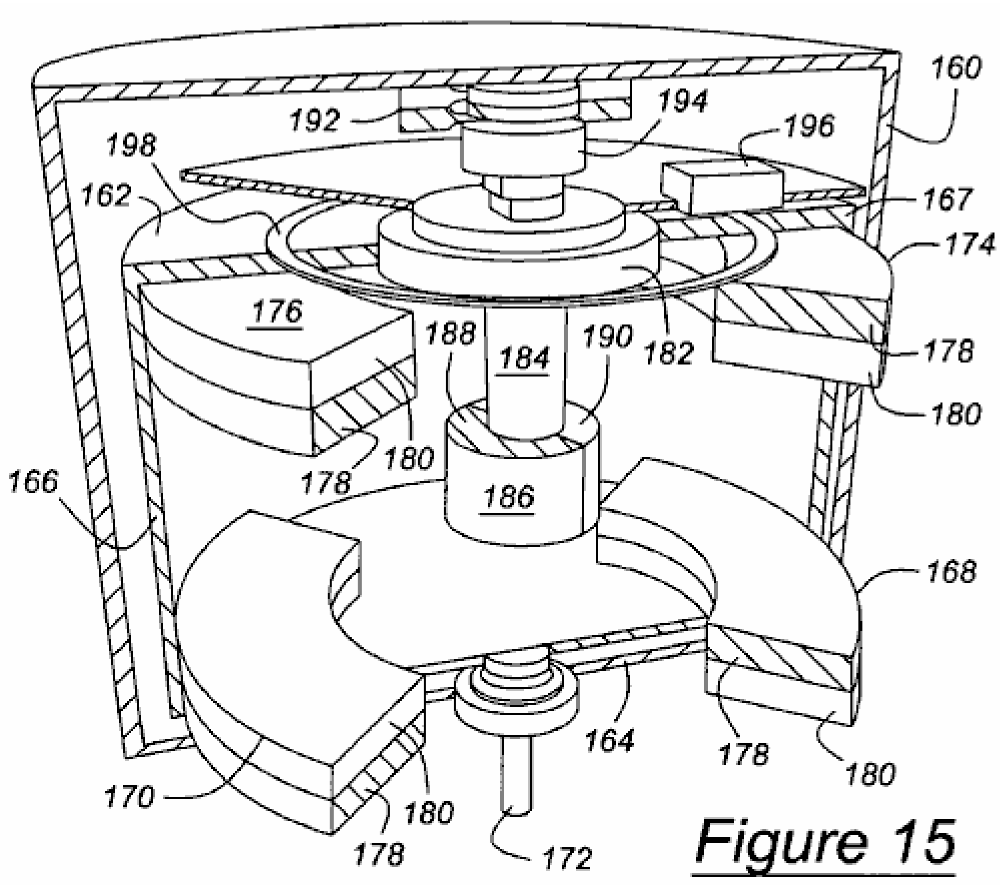

Figure 15

Fig.15 is a perspective cross sectional view of yet another embodiment of the motor according to this invention.

DETAILED DESCRIPTION OF THE PREFERRED EMBODIMENT

Figure 1A

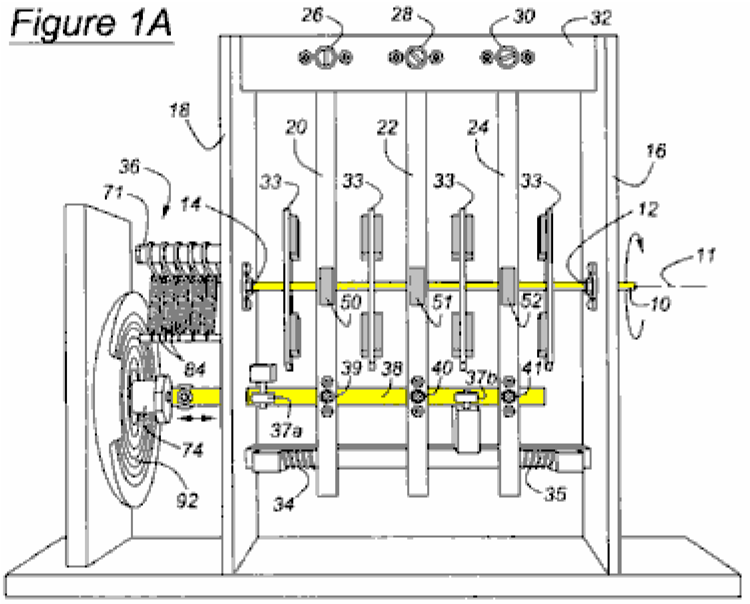

A motor according to this invention, illustrated in **Fig.1A** and **Fig.1B** includes a rotor shaft **10** supported for rotation about axis **11** on bearings **12** and **14** located on vertical supports **16** and **18** of a frame. An oscillator mechanism includes oscillator arms **20**, **22** and **24** pivotally supported on bearings **26** , **28** and **30** respectively, secured to a horizontal support **32**, which is secured at each axial end to the vertical supports **16** and **18**. The oscillator arms **20**, **22** and **24** are formed with through holes **15** aligned with the axis **11** of rotor shaft **10**, the holes permitting rotation of the rotor shaft and pivoting oscillation of arms without producing interference between the rotor and the arms.

Extending in opposite diametric directions from the rotor axis **11** and secured to the rotor shaft **10** are four plates **33** , axially spaced mutually along the rotor axis, each plate supporting permanent magnets secured to the plate and rotating with the rotor shaft.

Each pivoting oscillator arm **20**, **22** and **24** of the oscillator mechanism support permanent magnets located between the magnets of the rotor shaft. Helical coiled compression return springs **34** and **35** apply oppositely directed forces to oscillator arms **20** and **24** as they pivot about their respective pivotal supports **26** and **30**, respectively. From the point of view of **Fig.1A** and **Fig.1B**, when spring **34** is compressed by displacement of the oscillator arm, the spring applies a force to the right to oscillator arm **20** which tends to return it to its neutral, starting position. When spring **35** is compressed by displacement of arm **24**, the spring applies a force to the left to arm **24** tending to return it to its neutral, starting position.

The oscillator arms **20**, **22** and **24** oscillate about their supported bearings **26**, **28** and **30** , as they move in response to an actuator **36**, which includes an actuator arm **38**, secured through bearings at **39**, **40** and **41** to the oscillator arms **20**, **22** and **24**, respectively. Actuator **36** causes actuator arm **38** to reciprocate linearly leftwards and rightwards from the position shown in **Fig.1A** and **Fig.1B**. The bearings **39**, **40** and **41**, allow the oscillator arms **20**, **22** and **24** to pivot and the strut to translate without mutual interference. Pairs of guide wheels **37a** and **37b** spaced along actuator arm **38**, each include a wheel located on an opposite side of actuator arm **38** from another wheel of the wheel-pair, for guiding linear movement of the strut and maintaining the oscillator arms **20**, **22** and **24** substantially in a vertical plane as they oscillate. Alternatively, the oscillator arms **20**, **22** and **24** may be replaced by a mechanism that allows the magnets on the oscillator arms to reciprocate linearly with actuator arm **38** instead of pivoting above the rotor shaft **10** at **26**, **28** and **30**.

Figure 2

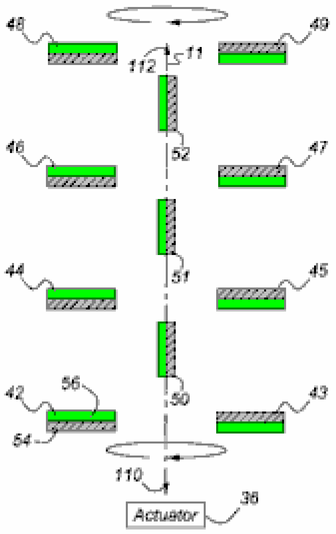

Fig.2 shows a first arrangement of the permanent rotor magnets **42 – 49** that rotate about axis **11** and are secured to the rotor shaft **10**, and the permanent reciprocating magnets **50 – 52** which move along axis **11** and are secured to the oscillating arms **20**, **22** and **24**. Each magnet has a pole of reference polarity and a pole of opposite polarity from that of the reference polarity. For example, rotor magnets **42**, **44**, **46** and **48**, located on one side of axis **11**, each have a north, positive or reference pole **54** facing actuator **36** and a south, negative or opposite pole **56** facing away from the actuator. Similarly, rotation magnets **43**, **45**, **47** and **49**, located diametrically opposite to rotor magnets **42**, **44**, **46** and **48**, each have a south pole facing toward actuator **36** and a north pole facing away from the actuator. The north poles **54** of the reciprocating magnets **50 – 52** face to the right from the point of view seen in **Fig.2** and **Fig.3** and their south poles **56** face towards the left.

Figure 4

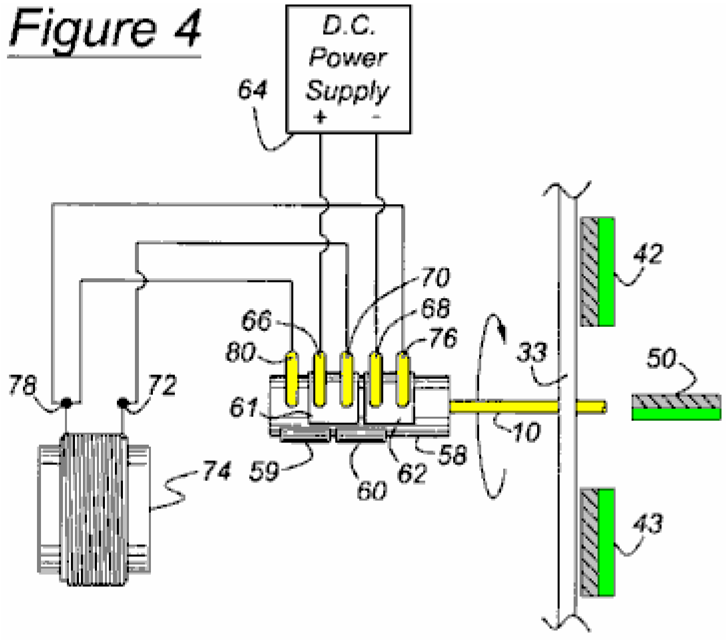

Fig.4 shows a switch assembly located in the region of the left-hand end of rotor shaft **10**. A cylinder, **58**, preferably formed of PVC, is secured to rotor shaft **10**. Cylinder **58** has contact plates **59** and **60**, preferably of brass, located on its outer surface, aligned angularly, and extending approximately 180 degrees about the axis **11**, as shown in **Fig.5**. Cylinder **58** has contact plates **61** and **62**, preferably made of brass, located on its outer surface, aligned angularly, extending approximately 180 degrees about the axis **11**, and offset axially with respect to contact plates **59** and **60**.

A D.C. power supply **64**, has its positive and negative terminals connected electrically through contact fingers **66** and **68**, to contact plates **61** and **62**, respectively. A third contact finger **70**, shown contacting plate **61**, connects terminal **72** of a solenoid **74** electrically to the positive terminal of the power supply **64** through contact finger **66** and contact plate **61**. A fourth contact finger **76**, shown contacting plate **62**, connects terminal **78** of solenoid **74** electrically to the negative terminal of the power supply **64** through contact finger **68** and contact plate **62**. A fifth contact finger **80**, axially aligned with contact plate **59** and offset axially from contact plate **61**, is also connected to terminal **78** of solenoid **74**.

Preferably the D.C. power supply **64** is a nine volt battery, or a D.C. power adaptor, whose input may be a conventional 120 volt, 60 Hz power source. The D.C. power supply and switching mechanism described with reference to **Figs. 4 to 7**, may be replaced by an A.C. power source connected directly across the terminals **72** and **78** of solenoid **74**. As the input current cycles, the polarity of solenoid **74** alternates, the actuator arm **38** moves relative to a toroidal permanent magnet **90** (shown in **Fig.8**), and the reciprocating magnets **50 – 52** reciprocate on the oscillating arms **20**, **22** and **24** which are driven by the actuator arm **38**.

Figure 5

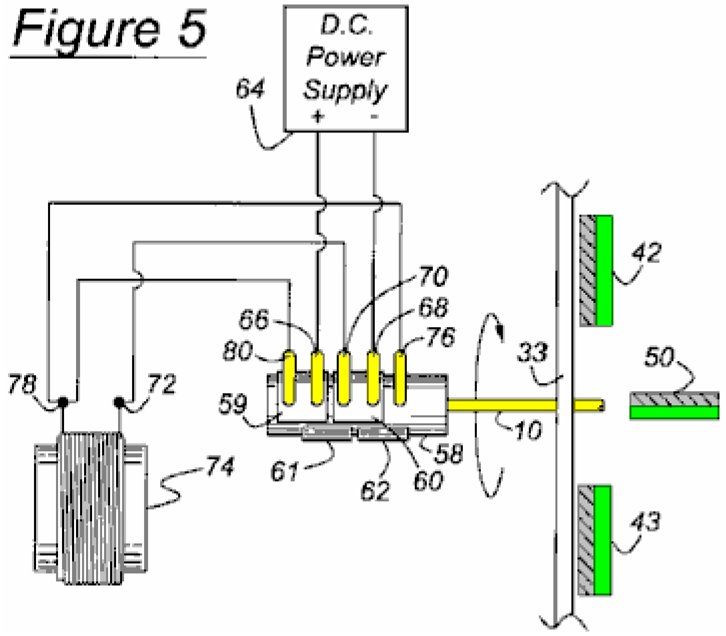

Fig.5 shows the state of the switch assembly when rotor shaft **10** has rotated approximately 180 degrees from the position shown in **Fig.4**. When the switch assembly is in the state shown in **Fig.5**, D.C. power supply **64** has its positive and negative terminals connected electrically by contact fingers **66** and **68** to contact plates **59** and **60**, respectively. Contact finger **70**, shown contacting plate **60**, connects terminal **72** of solenoid **74** electrically to the negative terminal of the power supply **64** through contact finger **68** and contact plate **60**. Contact finger **80**, shown contacting plate **59**, connects terminal **78** of solenoid **74** electrically to the positive terminal through contact finger **66** and contact plate **59**. Contact finger **76**, axially aligned with contact plate **62** and offset axially from contact plate **60**, remains connected to terminal **78** of solenoid **74**. In this way, the polarity of the solenoid **74** changes cyclically as the rotor **10** rotates through each one-half revolution.

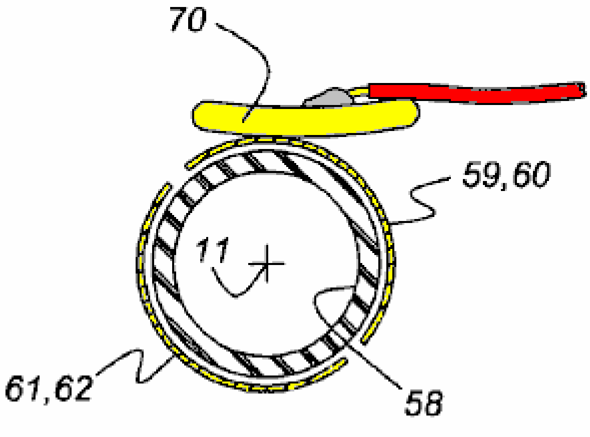

Figure 6

Fig.6 shows in cross-section, the cylinder **58** which is aligned with and driven by the rotor shaft **10**, a contact finger **70**, and the contact plates **59 – 62** of the switching assembly, which rotate with the rotor shaft and cylinder about the axis **11** .

Figure 7

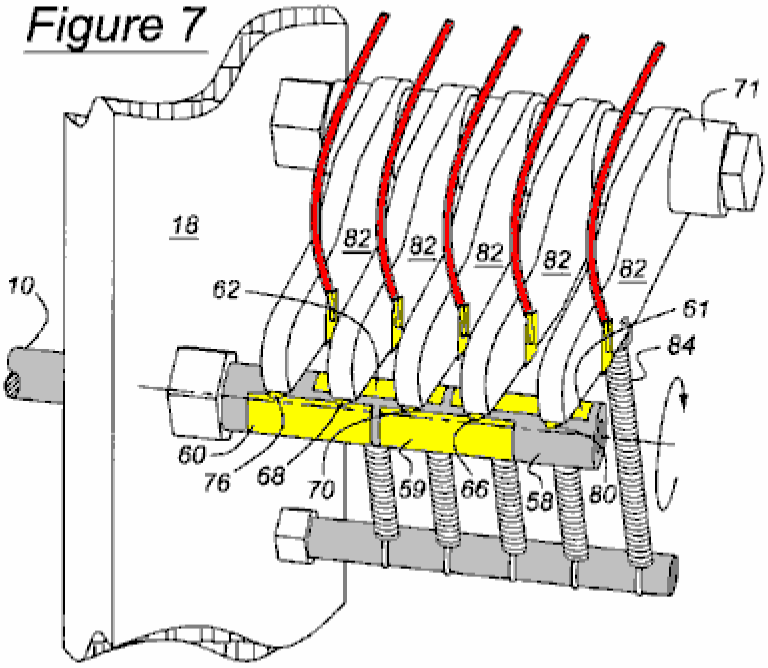

As **Fig.7** illustrates, axially spaced arms **82** are supported on a stub shaft **71**, preferably made of Teflon or another self-lubricating material, to facilitate the pivoting of the arms about the axis of the shaft **71**. Each contact finger **66**, **68**, **70**, **76** and **80** is located at the end of a arm **82**, and tension springs **84**, secured to each arm **82**, urge the contact fingers **66**, **68**, **70**, **76** and **80** continually toward engagement with the contact plates **59 – 62**.

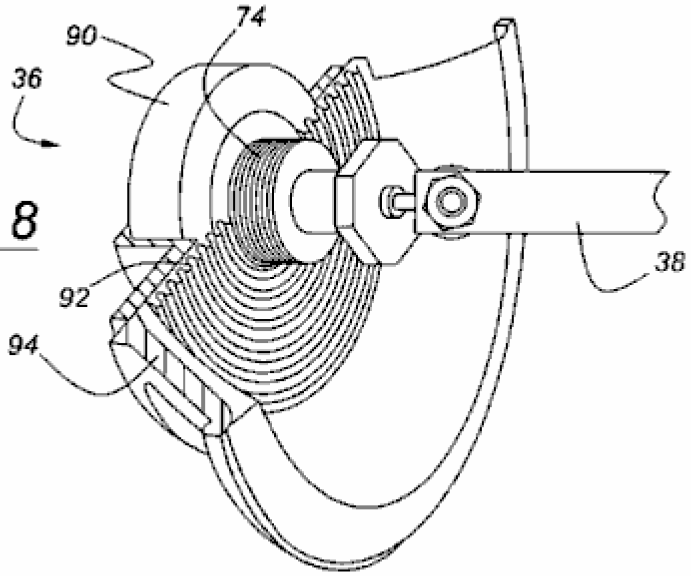

Figure 8

Fig.8 illustrates the actuator **36** for reciprocating the actuator arm **38** in response to rotation of the rotor shaft **10** and the alternating polarity of the solenoid **74**. The actuator **36**, includes the solenoid **74**, the toroidal permanent magnet **90**, an elastic flexible spider **92** for supporting the solenoid above the plane of the magnet, and a basket or frame **94**, to which the spider is secured. The actuator arm **38** is secured to solenoid **74**. The polarity of the solenoid **74** changes as rotor shaft **10** rotates, causing the solenoid and actuator arm **38** to reciprocate due to the alternating polarity of the solenoid relative to that of the toroidal permanent magnet **90**. As the solenoid polarity changes, the actuator arm **38** reciprocates linearly due to the alternating forces of attraction and repulsion of the solenoid **74** relative to the poles of the magnet **90**. The actuator arm **38** is secured to the oscillator arms **20**, **22** and **24** causing them to pivot, and the reciprocating magnets **50 – 52**, secured to the oscillator arms, to reciprocate. Alternatively, the reciprocating magnets **50 – 52** can be secured directly to the arm **38** , so that the magnets **50 – 52** reciprocate without need for an intermediary oscillating component.

It is important to note at this point in the description that, when two magnets approach each other with their poles of like polarity facing each other but slightly offset, there is a tendency for the magnets to rotate to the opposite pole of the other magnet. Therefore, in the preferred embodiment of the instant invention, the angular position at which the switch assembly of the actuator **36** changes between the states of **Fig.4** and **Fig.5** is slightly out of phase with the angular position of the rotor shaft **10** to help sling or propel the actuator arm **38** in the reverse direction at the preferred position of the rotor shaft. The optimum phase offset is approximately 5–8 degrees. This way, advantage is taken of each rotor magnet's tendency to rotate about its own magnetic field when slightly offset from the respective reciprocating magnet, and the repulsive force between like poles of the reciprocating magnets and the rotor magnets is optimised to propel the rotor magnet about the rotor axis **11**, thereby increasing the motor's overall efficiency.

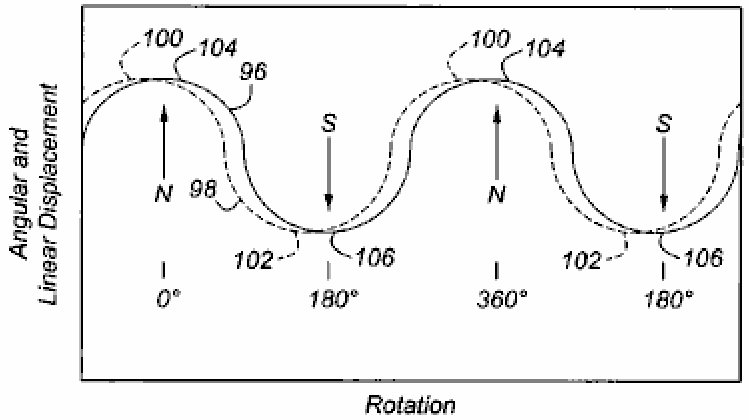

Figure 12

Fig.12 is a graph showing the angular displacement **96** of the rotor shaft **10** and linear displacement **98** of the reciprocating magnets **50 – 52**. Point **100** represents the end of the range of displacement of the reciprocating magnets **50 – 52** shown in FIGS. 2 and 9, and point 102 represents the opposite end of the range of displacement of the reciprocating magnets **50 – 52** shown in FIGS. 3 and 10. Point 104 represents the angular position of the rotor magnets **42 – 49** when in the horizontal plane shown in FIGS. 2 and 9, and point 106 represents the angular position of the rotor magnets **42 – 49** when rotated one-half rotation to the horizontal plane shown in **Fig.3** and **Fig.10**. Preferably, the reciprocating magnets **50 – 52** and rotor magnets **42 – 49** are out of phase: the reciprocating magnets lead and the rotor magnets lag by several degrees. The reciprocating magnets **50 – 52** reach the respective extremities of their range of travel before rotor rotation moves the rotor magnets **42 – 49** into the horizontal plane.

When the reference poles **54** and opposite poles **56** of the rotor magnets **42 – 49** and reciprocating magnets **50 – 52** are arranged as shown in **Fig.2** and **Fig.3**, the rotor position is stable when the rotor magnets are in a horizontal plane. The rotor position is unstable in any other angular position, and it moves towards horizontal stability from any unstable position, and is least stable when the rotor magnets **42 – 49** are in a vertical plane. The degree of stability of the rotor shaft **10** is a consequence of the mutual attraction and repulsion of the poles of the rotor magnets **42 – 49** and reciprocating magnets **50 – 52** and the relative proximity among the poles. In **Fig.2**, the reciprocating magnets **50 – 52** are located at a first extremity of travel. In **Fig.3**, the reciprocating magnets **50 – 52** have reciprocated to the opposite extremity of travel, and the rotor magnets have rotated one-half revolution from the position shown in **Fig.2**.

When the rotor is stopped, its rotation can be easily started manually by applying torque in either direction. Actuator **36** sustains rotor rotation after it is connecting to its power source. Rotation of rotor shaft **10** about axis **11** is aided by cyclic movement of the reciprocating magnets **50 – 52**, their axial location between the rotor magnet pairs **42 – 43** , **44 – 45** , **46 – 47** and **48 – 49**, the disposition of their poles in relation to the poles of the rotor magnets, and the frequency and phase relationship of their reciprocation relative to rotation of the rotor magnets. Actuator **36** maintains the rotor **10** rotating and actuator arm **38** oscillating at the same frequency, the phase relationship being as described with reference to **Fig.12**.

With the rotor magnets **42** and **49** as shown in **Fig.2**, when viewed from above, the north poles **54** of the rotor magnets on the left-hand side of axis **11** face a first axial direction **110**, i.e., toward the actuator **36**, and the north poles **54** of the rotor magnets on the right-hand side of axis **11** face in the opposite axial direction **112**, away from actuator **36**. When the rotor magnets **42 – 49** are located as in **Fig.2**, the north poles **54** of reciprocating magnets **50 – 52** are adjacent the south poles **56** of rotor magnets **45**, **47** and **49** , and the south poles **56** of reciprocating magnets **50 – 52** are adjacent the north poles **54** of rotor magnets **44**, **46** and **48**.

Figure 2

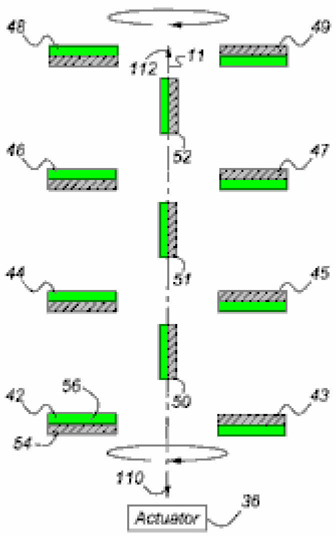

Figure 3

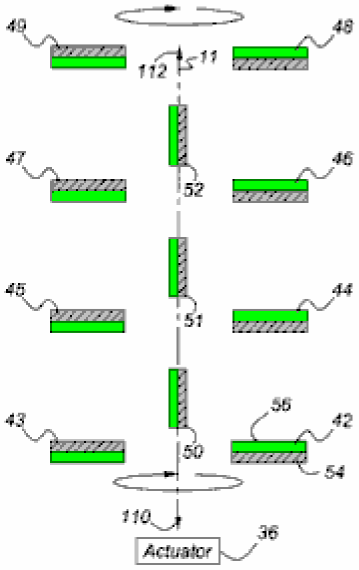

Furthermore, when the rotor shaft 10 rotates to the position shown in **Fig.2**, the reciprocating magnets **50 – 52** are located at, or near, one extremity of their axial travel, so that the north poles **54** of reciprocating magnets **50 – 52** are located close to the south poles **56** of rotor magnets **45**, **47** and **49**, respectively, and relatively more distant from the north poles **54** of rotor magnets **43**, **45** and **47**, respectively. Similarly, the south poles **56** of reciprocating magnets **50 – 52** are located close to the north poles of rotor magnet **44**, **46** and **48**, respectively, and relatively more distant from the south poles of rotor magnets **42**, **44** and **46**, respectively.

With the rotor magnets **42** and **49** rotated into a horizontal plane one-half revolution from the position of **Fig.1B**, when viewed from above as shown in **Fig.3**, the north poles **54** of reciprocating magnets **50 – 52** are located adjacent the south poles of rotor magnets **42**, **44** and **46**, and the south poles **56** of reciprocating magnets **50 – 52** are located adjacent the north poles **54** of rotor magnets **43**, **45** and **47**, respectively. When the rotor **10** shaft is located as shown in **Fig.3**, the reciprocating magnets **50 – 52** are located at or near the opposite extremity of their axial travel from that of **Fig.2**, such that the north poles **54** of reciprocating magnets **50 – 52** are located close to the south poles **56** of rotor magnet **42**, **44** and **46**, respectively, and relatively more distant from the north poles of rotor magnets **44**, **46** and **48**, respectively. Similarly, when the rotor shaft 10 is located as shown in FIG. 3, the south poles 56 of reciprocating magnets **50 – 52** are located close to the north poles of rotor magnet **43**, **45** and **47**, respectively, and relatively more distant from the south poles of rotor magnets **45**, **47** and **49**, respectively.

In operation, rotation of rotor shaft **10** in either angular direction is started manually or with a starter-actuator (not shown). Actuator **36** causes reciprocating magnets **50 – 52** to oscillate or reciprocate at the same frequency as the rotational frequency of the rotor shaft **10**, i.e. one cycle of reciprocation per cycle of rotation, preferably with the phase relationship illustrated in **Fig.12**. When the reciprocating magnets **50 – 52** are located as shown in **Fig.2**, the rotor shaft **10** will have completed about one-half revolution from the position of **Fig.3** to the position of **Fig.2**.

Rotation of the rotor **10** is aided by mutual attraction between the north poles **54** of the reciprocating magnets **50 – 52** and the south poles **56** of the rotor magnets **43**, **45**, **47** and **49** that are then closest respectively to those north poles of reciprocating magnets **50 – 52**, and mutual attraction between the south poles of reciprocating magnets **50 – 52** and the north poles of the rotor magnets **42**, **44**, **46** and **48** that are then closest respectively to the north poles of the reciprocating magnets.

Assume rotor shaft **10** is rotating counterclockwise when viewed from the actuator **36**, and the rotor magnets **42**, **44**, **46** and **48** are located above rotor magnets **43**, **45**, **47** and **49**. With the rotor shaft **10** positioned so that the reciprocating magnets **50 – 52** are approximately mid-way between the positions shown in **Fig.2** and **Fig.3** and moving toward the position shown in **Fig.2**, as rotation proceeds, the south pole of each reciprocating magnet **50 – 52** applies a downward attraction to the north pole **54** of the closest of the rotor magnets **44**, **46** and **48**, and the north pole **54** of each reciprocating magnet **50 – 52** attracts upwards the south pole **56** of the closest rotor magnet **45**, **47** and **49**. This mutual attraction of the poles causes the rotor to continue rotating counterclockwise to the position of **Fig.2**.

Then the reciprocating magnets **50 – 52** begin to move toward the position shown in **Fig.3**, and rotor inertia overcomes the steadily decreasing force of attraction between the poles as they move mutually apart, permitting the rotor shaft **10** to continue its counterclockwise rotation into the vertical plane where rotor magnets **43**, **45**, **47** and **49** are located above rotor magnets **42**, **44**, **46** and **48**. As rotor shaft **10** rotates past the vertical plane, the reciprocating magnets **50 – 52** continue to move toward the position of **Fig.3**, the south pole **56** of each reciprocating magnet **50 – 52** attracts downward the north pole of the closest rotor magnet **43**, **45** and **47**, and the north pole **54** of each reciprocating magnet **50 – 52** attracts upward the south pole **56** of the closest rotor magnet **42**, **44** and **46**, causing the rotor **10** to rotate counterclockwise to the position of **Fig.3**. Rotor inertia maintains the counterclockwise rotation, the reciprocating magnets **50 – 52** begin to move toward the position shown in **Fig.2**, and the rotor shaft **10** returns to the vertical plane where rotor magnets **43**, **45**, **47** and **49** are located above rotor magnets **42**, **44**, **46** and **48**, thereby completing one full revolution.

Figure 9

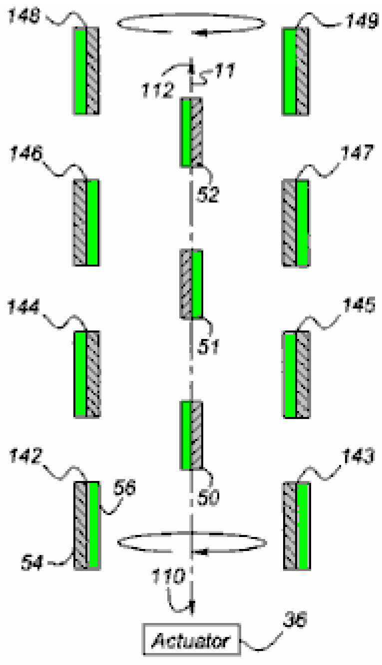

Figure 10

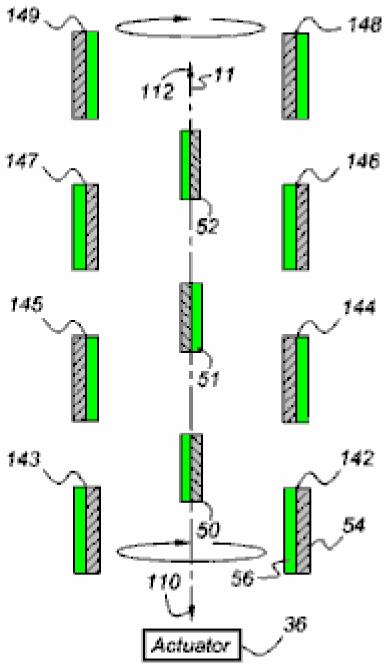

Fig.9 and **Fig.10** show a second arrangement of the motor in which the poles of the rotor magnets **142 – 149** are parallel to, and face the same direction as those of the reciprocating magnets **50 – 52**. Operation of the motor arranged as shown in **Fig.9** and **Fig.10** is identical to the operation described with reference to **Fig.2** and **Fig.3**. In the embodiment of **Fig.9** and **Fig.10**, the poles of the reciprocating magnets **50 – 52** face more directly the poles of the rotor magnets **142 – 149** in the arrangement of **Fig.2** and **Fig.3**. The forces of attraction and repulsion between the poles are greater in the embodiment of **Fig.9** and **Fig.10**, therefore, greater torque is developed. The magnitude of torque is a function of the magnitude of the magnetic forces, and the distance through which those force operate.

Figure 11

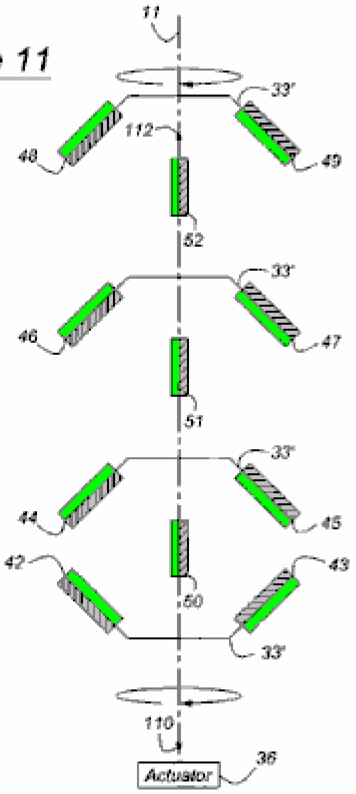

Fig.11 shows a third embodiment of the motor in which the radial outer portion of the rotor plates **33'** are skewed relative to the axis **11** such that the poles of the rotor magnets **42 – 49** are canted relative to the poles of the reciprocating magnets **50 – 52**. Operation of the motor arranged as shown in **Fig.11** is identical to the operation described with reference to **Fig.2** and **Fig.3**.

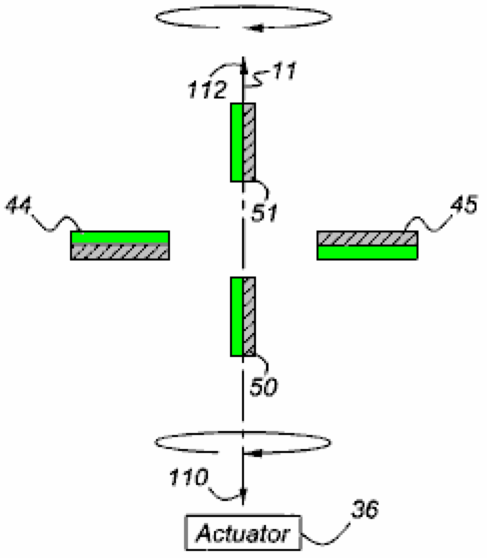

Figure 13

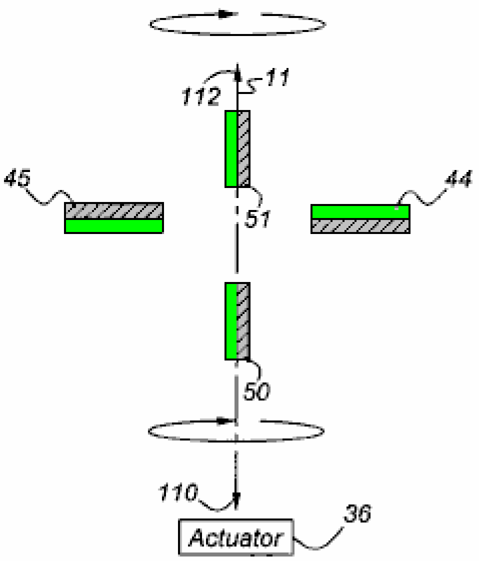

Figure 14

Fig.13 and **Fig.14** show a fourth embodiment of the motor in which each of two reciprocating magnets **50** and **51** is located on an axially opposite side of a rotor magnet pair **44** and **45**. Operation of the motor arranged as shown in **Fig.13** and **Fig.14** is identical to the operation described with reference to **Fig.2** and **Fig.3**.

The direction of the rotational output can be in either angular direction depending on the direction of the starting torque.

The motor can produce reciprocating output on actuator arm **38** instead of the rotational output described above upon disconnecting actuator arm **38** from actuator **36**, and connecting a crank, or a functionally similar device, in the drive path between the actuator and the rotor shaft **10**. The crank converts rotation of the rotor shaft **10** to reciprocation of the actuator **30.** In this case, the rotor shaft **10** is driven rotatably in either direction by the power source, and the output is taken on the reciprocating arm **38**, which remains driveably connected to the oscillating arms **20**, **22** and **24**. The reciprocating magnets **50**, **51** and **52** drive the oscillating arms **20**, **22** and **24**.

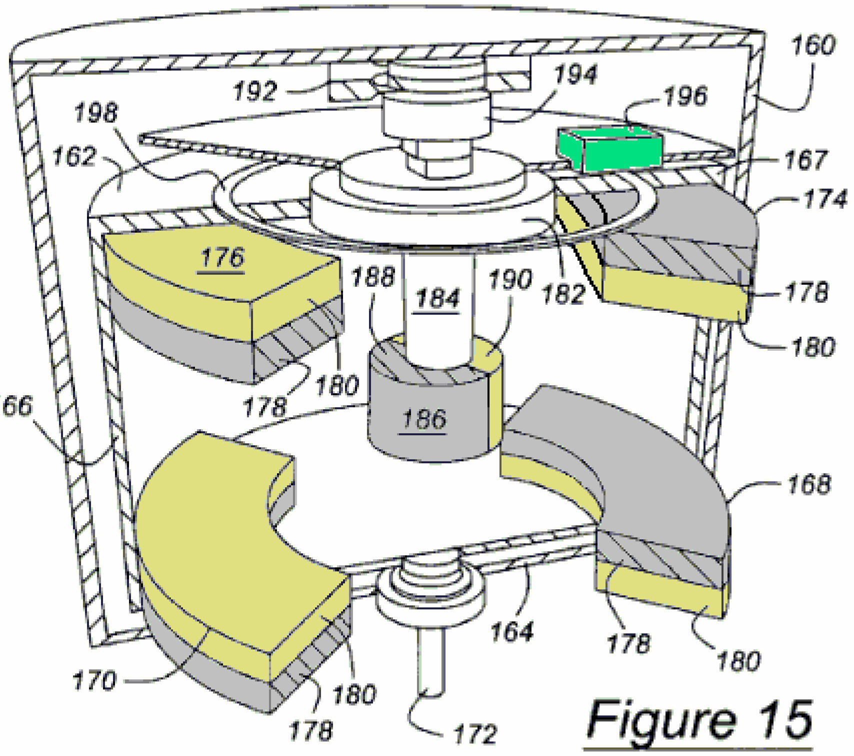

Figure 15

In the perspective cross sectional view shown in **Fig.15**, an outer casing **160** contains a motor according to this invention functioning essentially the same as the embodiment of the more efficient motor shown in **Fig.1A** and **Fig.1B**, but having a commercial appearance. The rotor includes discs **162** and **164** , which are connected by an outer drum **166** of nonmagnetic material. The upper surface **167** of drum **166** forms a magnetic shield surrounding the rotor. Mounted on the lower disc **164** are curved rotor magnets **168** and **170**, which extend angularly about a rotor shaft **172**, which is secured to the rotor. Mounted on the upper disc **162**, are curved rotor magnets **174** and **176**, which extend angularly about the rotor shaft **172**. The reference poles are **178**, and the opposite poles are **180**. A bushing **182** rotates with the rotor.

A reciprocating piston **184**, which moves vertically but does not rotate, supports reciprocating magnet **186**, whose reference pole **188** and opposite pole **190** extend angularly about the axis of piston **184** .

A solenoid magnet **192**, comparable to magnet **90** of the actuator **36** illustrated in **Fig.8**, is located adjacent a solenoid **194**, comparable to solenoid **74** of **Fig.4** and **Fig.5**. The polarity of solenoid **194** alternates as the rotor rotates. Simply stated, as a consequence of the alternating polarity of the solenoid **194**, the reciprocating piston **184** reciprocates which, in turn, continues to advance the rotor more efficiently, using the attraction and repulsion forces between the reciprocating magnets **186** and rotor magnets **168**, 170, **174** and **176** as described above and shown in any of the different embodiments using **Fig.2**, **Fig.3**, **Fig.9**, **Fig.10**, **Fig.11**, **Fig.13** and **Fig.14**. Of course, just as the alternating polarity of the solenoid can put the motor in motion, so can the turning of the rotor, as described above. A photosensor **196** and sensor ring **198** can be used, as an alternative to the mechanical embodiment described in **Fig.4** to **Fig.7**, to determine the angular position of the rotor so as to alternate the polarity of the solenoid **194** with the rotor to correspond with the phase and cycle shown in **Fig.12**.

In accordance with the provisions of the patent statutes, the present invention has been described in what is considered to represent its preferred embodiment. However, it should be noted that the invention can be constructed otherwise than as specifically illustrated and described without departing from its spirit or scope. It is intended that all such modifications and alterations be included insofar as they come within the scope of the appended claims or the equivalents thereof.

CLAIMS

1. A motor comprising: a rotor supported for rotation about an axis; a first pair of rotor magnets supported on the rotor, including a first rotor magnet and a second rotor magnet spaced angularly about the axis in an opposite radial direction from the first rotor magnet such that the first pair of rotor magnets rotate about the axis along a path having an outermost circumferential perimeter; a first reciprocating magnet supported for movement toward and away from the first and second rotor magnets, the first reciprocating magnet being axially disposed in a first space within a boundary defined by longitudinally extending the outermost circumferential perimeter of the first pair of rotor magnets, and the first reciprocating magnet is a permanent dipole magnet having a reference pole facing laterally from the axis and an opposite pole facing in an opposite lateral direction from the reference pole; and an actuator for moving the first reciprocating magnet cyclically toward and away from the first pair of rotor magnets without passing through a centre of rotation of the first pair of rotor magnets so as to simultaneously create repulsion and attraction forces with the first pair of rotor magnets to cyclically rotate the first pair of rotor magnets relative to the first reciprocating magnet in one rotational direction.

2. The motor of claim 1 further comprising: a second reciprocating magnet axially disposed in a second space within the boundary defined by longitudinally extending the outermost circumferential perimeter of the first pair of rotor magnets at an axial opposite side of the first pair of rotor magnets, and supported for movement toward and away from the first and second rotor magnets without passing through the centre of rotation of the first pair of rotor magnets.

3. The motor of claim 1 further comprising: a second pair of rotor magnets supported on the rotor, spaced axially from the first pair of rotor magnets, the second pair including a third rotor magnet and a fourth rotor magnet spaced angularly about the axis in an opposite radial direction from the third rotor magnet; and wherein the first reciprocating magnet is located in said first space disposed axially between the first and second rotor magnet pairs, and the actuator cyclically moves the first reciprocating magnet toward and away from the first and second pairs of rotor magnets without passing through a centre of rotation of the second pair of rotor magnets.

4. The motor of claim 1 further comprising: a second pair of rotor magnets supported on the rotor, spaced axially from the first pair of rotor magnets, the second pair including a third rotor magnet and a fourth rotor magnet spaced angularly about the axis in an opposite radial direction from the third rotor magnet; a third pair of rotor magnets supported on the rotor, spaced axially from the first and second pairs of rotor magnets, the third pair including a fifth rotor magnet and a sixth rotor magnet spaced angularly about the axis in an opposite radial direction from the fifth rotor magnet; and a second reciprocating magnet disposed in a second space located axially between the second and third rotor magnet pairs and within the boundary defined by longitudinally extending the outermost circumferential perimeter of the first pair of rotor magnets, and the second reciprocating magnet being supported for movement toward and away from the second and third pairs of rotor magnet; and wherein the first reciprocating magnet disposed in the first space is still further located axially between the first and second rotor magnet pairs, and the actuator cyclically moves the first reciprocating magnet toward and away from the first and second pairs of rotor magnets without passing through a centre of rotation of the second pair of rotor magnets, and the second reciprocating magnet toward and away from the second and third pairs of rotor magnets without passing through the centre of rotation of the second pair of rotor magnets and through a centre of rotation of a third pair of rotor magnets.

5. The motor of claim 1 further comprising: an arm supported for pivotal oscillation substantially parallel to the axis, the first reciprocating magnet being supported on the arm adjacent the first and second rotor magnets; and wherein the actuator is driveably connected to the arm.

6. The motor of claim 1 wherein: the first and second rotor magnets are permanent dipole magnets, the first rotor magnet having a reference pole facing axially away from the first reciprocating magnet and an opposite pole facing axially toward the first reciprocating magnet, the second rotor magnet having a reference pole facing axially toward the first reciprocating magnet and an opposite pole facing axially away from the first reciprocating magnet.

7. The motor of claim 1 wherein: the first and second rotor magnets are magnet is a permanent dipole magnets magnet, the first rotor magnet having a reference pole facing axially away from the first reciprocating magnet and an opposite pole facing axially toward the first reciprocating magnet, the second rotor magnet having a reference pole facing axially toward the first reciprocating magnet and an opposite pole facing axially away from the first reciprocating magnet; and the motor further comprising: a second pair of rotor magnets supported on the rotor, spaced axially from the first pair of rotor magnets, the second pair including a third permanent dipole rotor magnet having a reference pole facing axially toward the first reciprocating magnet and an opposite pole facing away from the first reciprocating magnet, and a fourth permanent dipole rotor magnet spaced angularly about the axis in an opposite radial direction from the third rotor magnet, the fourth permanent dipole rotor magnet having a reference pole facing axially away from the first reciprocating magnet and an opposite pole facing toward the first reciprocating magnet; and wherein the first reciprocating magnet disposed in said first space is still further located axially between the first and second rotor magnet pairs, and the actuator cyclically moves the first reciprocating magnet toward and away from the first and second pairs of rotor magnets without passing through a centre of rotation of the second pair of rotor magnets.

8. The motor of claim 1 wherein: the first and second rotor magnets are permanent dipole magnets, each rotor magnet having a reference pole facing in a first lateral direction relative to the reference pole of the first reciprocating magnet and an opposite pole facing in a second lateral direction opposite the first lateral direction of the respective rotor magnet.

9. The motor of claim 1 wherein: the first and second rotor magnets are permanent dipole magnets, each rotor magnet having a reference pole facing in a first lateral direction relative to the reference pole of the first reciprocating magnet and an opposite pole facing in a second lateral direction opposite the first lateral direction of the respective rotor magnet; and the motor further comprising: a second pair of rotor magnets supported for rotation on the rotor about the axis, the second pair of rotor magnets being spaced axially from the first pair of rotor magnets, the second pair including a third permanent dipole rotor magnet and a fourth permanent dipole rotor magnet, the third and fourth rotor magnets each having a reference pole facing in the second lateral direction and an opposite pole facing in the first lateral direction, and wherein the first reciprocating magnet disposed in the first space is still further located axially between the first and second rotor magnet pairs, and the actuator cyclically moves the first reciprocating magnet toward and away from the first and second pairs of rotor magnets without passing through a centre of rotation of the second pair of rotor magnets.

10. The motor of claim 3 further comprising: a third pair of rotor magnets supported on the rotor, spaced axially from the first and second pairs of rotor magnets, the third pair including a fifth rotor magnet and a sixth rotor magnet spaced angularly about the axis in an opposite radial direction from the fifth rotor magnet; a second reciprocating magnet located in a second space within the boundary defined by longitudinally extending the outermost circumferential perimeter of the first pair of rotor magnets and axially between the second and third rotor magnet pairs, and the second reciprocating magnet being supported for movement toward and away from the second and third pairs of rotor magnet; a first arm supported for pivotal oscillation substantially parallel to the axis, the first reciprocating magnet being supported on the arm adjacent the first and second pairs of rotor magnets; and a second arm supported for pivotal oscillation substantially parallel to the axis, the second reciprocating magnet being supported on the arm adjacent the second and third pairs of rotor magnets; and wherein the actuator is driveably connected to the first and second arms.

11. A motor comprising: a rotor supported for rotation about an axis; a first pair of rotor magnets supported on the rotor, including a first rotor magnet and a second rotor magnet spaced angularly about the axis from the first rotor magnet such that the first pair of rotor magnets rotate about the axis along a circumferential path having an outermost perimeter; a first arm supported for pivotal oscillation along the axis, located adjacent the first and second rotor magnets; a first reciprocating magnet, supported on the first arm for movement toward and away from the first and second rotor magnets, the first reciprocating magnet being disposed axially within a first space within a boundary defined by longitudinally extending the outermost perimeter of the first circumferential path of the first pair of rotor magnets; a second pair of rotor magnets supported on the rotor, spaced axially from the first pair of rotor magnets, the second pair including a third rotor magnet, and a fourth rotor magnet spaced angularly about the axis from the third rotor magnet; a third pair of rotor magnets supported on the rotor, spaced axially from the first and second pairs of rotor magnets, the third pair including a fifth rotor magnet, and a sixth rotor magnet spaced angularly about the axis from the fifth rotor magnet; a second arm supported for pivotal oscillation along the axis between the second and third pairs of rotor magnets; a second reciprocating magnet located axially between the second and third rotor magnet pairs and supported on the second arm for movement toward and away from the second and third pairs of rotor magnet; and an actuator for moving the first reciprocating magnet cyclically toward and away from the first pair of rotor magnets without passing through a centre of rotation of the first pair of rotor magnets so as to simultaneously create repulsion and attraction forces with the first pair of rotor magnets to cyclically rotate the first pair of rotor magnets relative to the first reciprocating magnet in one rotational direction; and wherein the first reciprocating magnet disposed in the first space is still further located axially between the first and second rotor magnet pairs, and the actuator cyclically moves the first arm and first reciprocating magnet toward and away from the first and second pairs of rotor magnets without passing the first reciprocator magnet through a centre of rotation of the second pair of rotor magnets, and moves the second arm and second reciprocating magnet toward and away from the second and third pairs of rotor magnets without passing the second reciprocator magnet through the centre of rotation of the second pair of rotor magnets and through a centre of rotation of the third pair of rotor magnets.

12. The motor of claim 11 wherein the actuator further comprises: a rotor shaft driveably connected to the rotor for rotation therewith; first and second bridge plates, mutually angularly aligned about the axis, extending over a first angular range about the axis; third and fourth bridge plates, offset axially from the first and second bridge plates, mutually angularly aligned about the axis, extending over a second angular range about the axis; an electric power supply including first and second terminals; a first contact connecting the first power supply terminal alternately to the first bridge plate and the third bridge plate as the rotor rotates; a second contact connecting the second power supply terminal alternately to the second bridge plate and the fourth bridge plate as the rotor rotates; a toroidal permanent magnet; a solenoid supported above a pole of the toroidal permanent magnet, including first and second terminals; a third contact connecting the first solenoid terminal alternately to the first and second power supply terminals through the first and fourth bridge plates and first contact as the rotor rotates; a fourth contact alternately connecting and disconnecting the second power supply terminal and the second solenoid terminal as the rotor rotates; and a fifth contact alternately connecting and disconnecting the first power supply terminal and the second solenoid terminal as the rotor rotates.

13. The motor of claim 11 wherein the actuator further comprises: a toroidal permanent magnet; an A.C. power source; and a solenoid supported for displacement adjacent a pole of the toroidal permanent magnet, including first and second terminals electrically connected to the power source.

14. A motor comprising: a rotor supported for rotation about an axis; a first rotor magnet supported for rotation about the axis along a first circumferential path having an outermost perimeter and a centre at the axis, the first rotor magnet having a first permanent reference pole facing laterally toward the axis and a first permanent opposite pole facing in an opposite lateral direction toward the first reference pole; a pair of reciprocating magnets supported for movement toward and away from the rotor magnet, including a first reciprocating magnet and a second reciprocating magnet spaced axially from the first rotor magnet, each reciprocating magnet being at least partially disposed within a first axial space having a boundary defined by longitudinally extending the outermost perimeter of the first circumferential path of the first rotor magnet, wherein the rotor magnet is located axially between the first and second reciprocating magnets; and an actuator for moving the pair of reciprocating magnets cyclically toward and away from the rotor magnet without passing through the centre of the first circumferential path so as to simultaneously create repulsion and attraction forces with the first rotor magnet to cyclically rotate the rotor magnet relative to the pair of reciprocating magnets in one rotational direction.

15. The motor of claim 14 wherein the first and second reciprocating magnets are permanent dipole magnets with each having a reference pole facing laterally from the axis and an opposite pole facing in an opposite lateral direction from its corresponding reference pole.

16. The motor of claim 15 further comprising: a second rotor magnet spaced axially from the first rotor magnet, the second rotor magnet being supported for rotation about the axis along a second circumferential path having an outermost perimeter about the centre, the second rotor magnet including a second permanent reference pole facing laterally toward the axis and a second permanent opposite pole facing in an opposite lateral direction toward the second reference pole; and wherein the second reciprocating magnet is located axially between the first and second rotor magnets and at least partially within a second axial space having a boundary defined by longitudinally extending the outermost perimeter of the second circumferential path of the second rotor magnet, and the actuator cyclically moves the second reciprocating magnet away from and towards the second rotor magnet.

The Magnetic Motor of Charles Flynn

US Patent 5,455,474 **3rd October 1995** **Inventor: Charles Flynn**

MAGNETIC MOTOR CONSTRUCTION

This patent gives details of a permanent magnet motor which uses electromagnet shielding to achieve continuous rotation. The input power is very small with even a 9-volt battery being able to operate the motor. The output power is substantial and operation up to 20,000 rpm is possible. Construction is also very simple and well within the capabilities of the average handyman. It should be realised that the power of this motor comes from the permanent magnets and not from the small battery input used to prevent lock-up of the magnetic fields.

ABSTRACT

The present invention is a motor with permanent magnets positioned so that there is magnetic interaction between them. A coil placed in the space between the permanent magnets is used to control the magnetic interaction. This coil is connected to a source of electric potential and controlled switching so that closing the switch places a voltage across the coil and affects the magnetic interaction between the permanent magnets as to produce rotational movement of the output shaft.

US Patent References:

3096467	Brushless d. c. motor with permanent magnet rotor	July, 1963	Angus et al.	318/138
3569806	Starting Arrangement for Solid-State Motor	March, 1971	Brailsford	318/254
3670189	Gated Permanent Magnet Motor	June, 1972	Monroe	310/181
3796039	Electric Micromotor	March, 1974	Lucien	310/268
3883633	Commutatorless Motor	May, 1975	Kohler	310/152
4151431	Permanent Magnet Motor	April, 1979	Johnson	310/12
4187441	High-power-density Brushless DC Motor	February, 1980	Oney	310/112
4758756	Vernier-type Electrodynamic Machine	July, 1988	Pouillange	310/152
4875110	Rotary-head Apparatus with Motor Magnet	October, 1989	Kazama	310/268
4972112	Brushless DC Motor	November, 1990	Kim	310/181
5179307	Direct Current Brushless Motor	January, 1993	Porter	310/268

Foreign References:

DE210005	July, 1960	310/181
JP0025153	February, 1982	310/181
JP01521078	September, 1982	310/152
JP0002840	January, 1987	310/152

BACKGROUND OF THE INVENTION

The present invention is an improvement over the inventions disclosed in patent applications 07/322,121 and 07/828,703. The devices disclosed in those applications relate to means to produce useful energy using permanent magnets as the driving source. This is also true of the present invention which represents an important improvement over the known constructions and one which is simpler to construct, can be made to be self starting, is easier to adjust, and is less likely to get out of adjustment. The present construction is also relatively easy to control, is relatively stable and produces an amazing amount of output energy considering the source of driving energy that is used. The present construction makes use of permanent magnets as the source of driving energy but shows a novel means of controlling the magnetic interaction between the magnet members in a manner which is relatively rugged, produces a substantial amount of output energy and torque, and in a device capable of being used to generate substantial amounts of energy that is useful for many different purposes.

The present invention resides has a fixed support structure with one or more fixed permanent magnets such as an annular permanent magnet mounted on it with the pole faces of the permanent magnet on opposite faces of the magnet. The device has one or more relatively flat coils positioned around the edge of one of the faces of the magnet, and a shaft extends through the permanent magnet with one or more other permanent magnets attached to it. The spaced permanent magnets and the fixed permanent magnet have their polarities arranged to produce a magnetic interaction between them. The device also includes a circuit for selectively and sequentially energising the coils to control the magnetic interaction between the magnets in such a manner as to produce rotation between them. Various methods can be used to control the application of energy to the coils including a timer or a control mechanism mounted on the rotating shaft. This design can be made to be self-starting or to be started with some initial help to establish rotation.

OBJECTS OF THE INVENTION

It is a principal object of the present invention to teach the construction and operation of a relatively simple, motor-like device using permanent magnets in an unique manner to generate rotational or other forms of movement.

Another object is to teach the construction and operation of a relatively simple, motor-like device having novel means for coupling and/or decoupling relatively moveable permanent magnets to produce motion.

Another object is to provide novel means for controlling the coupling and decoupling of relatively moveable permanent magnets.

Another object is to make the generation of rotational energy less expensive and more reliable.

Another object is to teach a novel way of generating energy by varying magnetic interaction forces between permanent magnets.

Another object is to provide an inexpensive way of producing energy.

Another object is to provide a substitute source of energy for use in places where conventional motors, generators and engines are used.

These and other objects and advantages of the present invention will become apparent after considering the following detailed specification of preferred embodiments in conjunction with the accompanying drawings.

BRIEF DESCRIPTION OF THE DRAWINGS

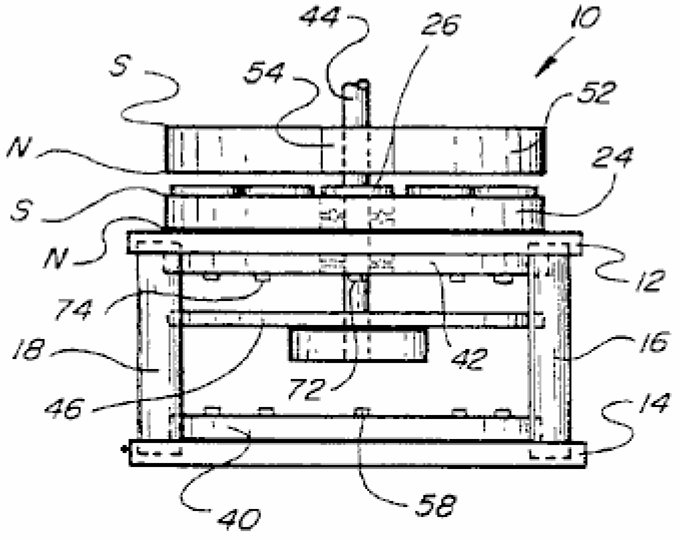

Fig. 1

Fig.1 is a side view of a magnetically powered device constructed according to the present invention.

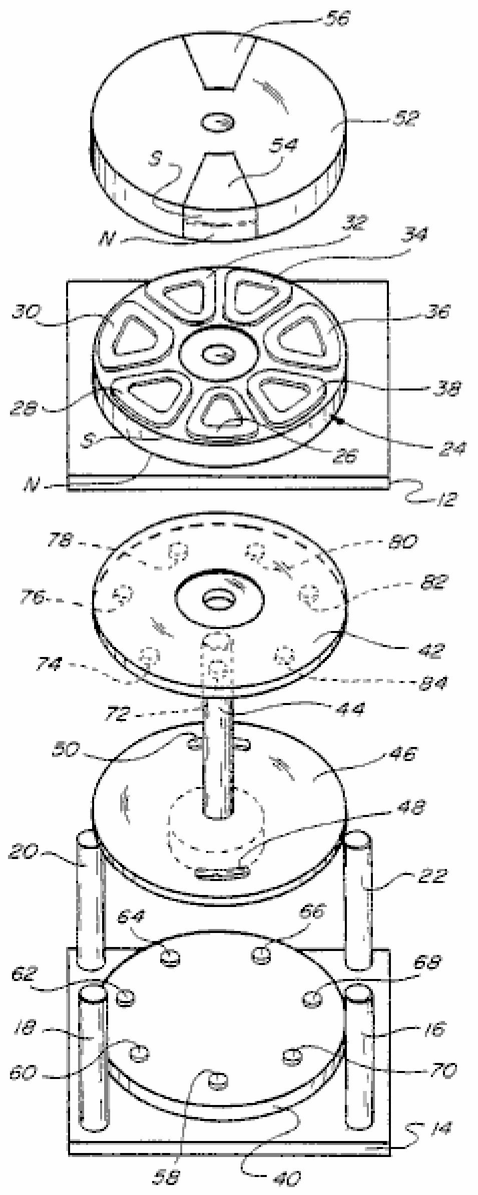

Fig. 2

Fig.2 is an exploded view of the device shown in Fig.1.

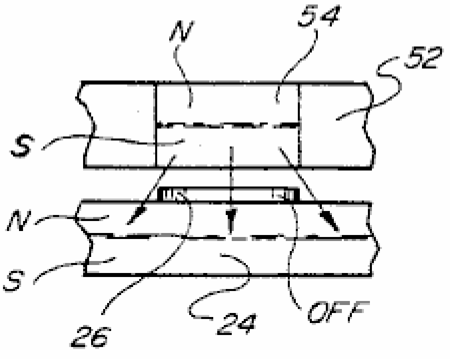

Fig. 3

Fig.3 is a fragmentary side view of one of the movable magnets and the fixed magnet, in one position of the device.

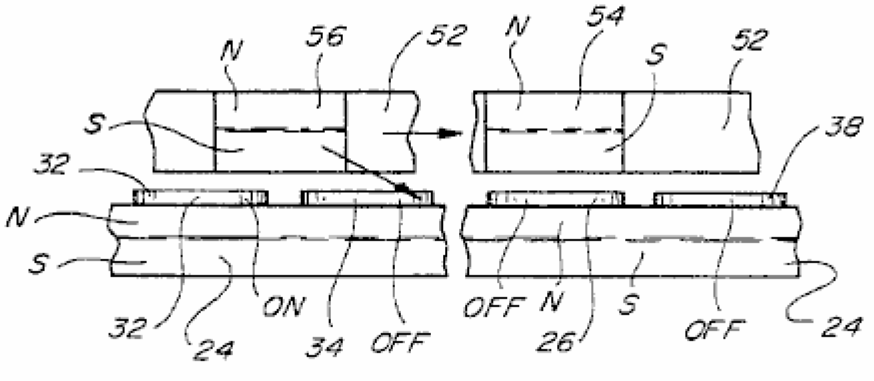

Fig. 4

Fig.4 is a view similar to Fig.3 but showing the relationship between the other movable magnets and the fixed magnet in the same rotational position of the device.

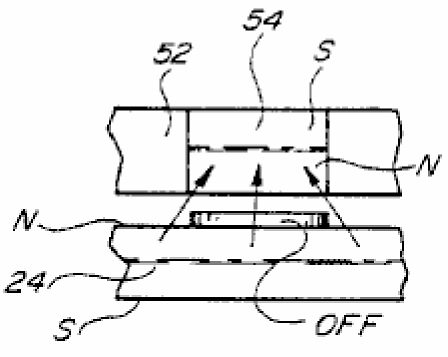

Fig. 5

Fig.5 is a fragmentary view similar to Fig.3 but showing a repulsion interaction between the relatively movable permanent magnets.

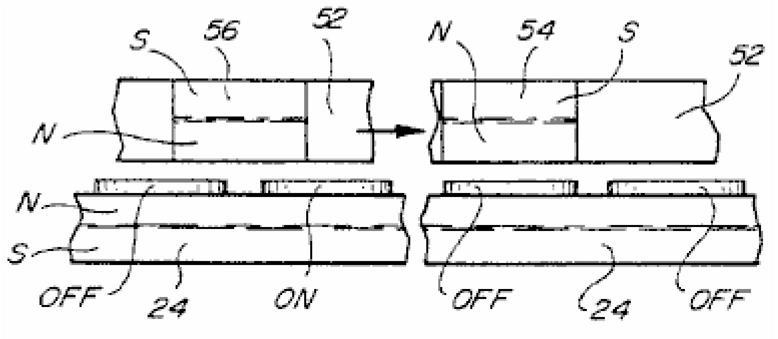

Fig. 6

Fig.6 is a view similar to Fig.4 for the condition shown in Fig.5.

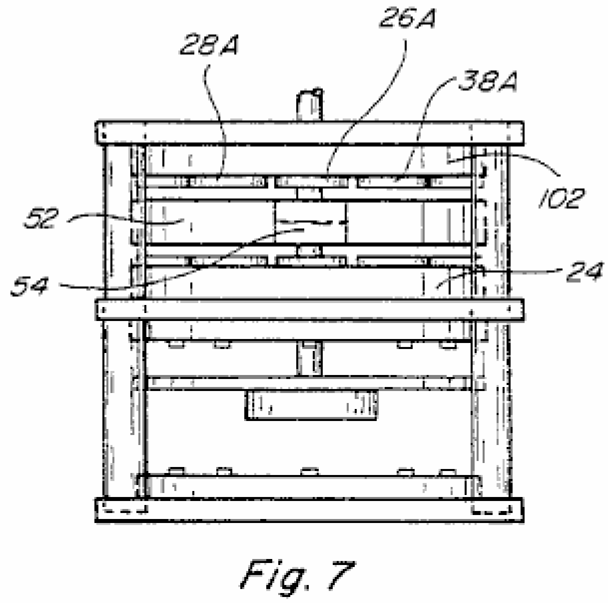

Fig.7 is a side view showing another embodiment which is capable of producing even greater energy and torque.

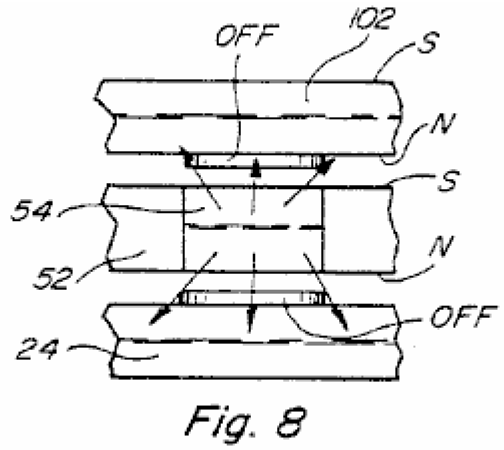

Fig.8 is a fragmentary elevational view similar to Fig.3 for the device of Fig7.

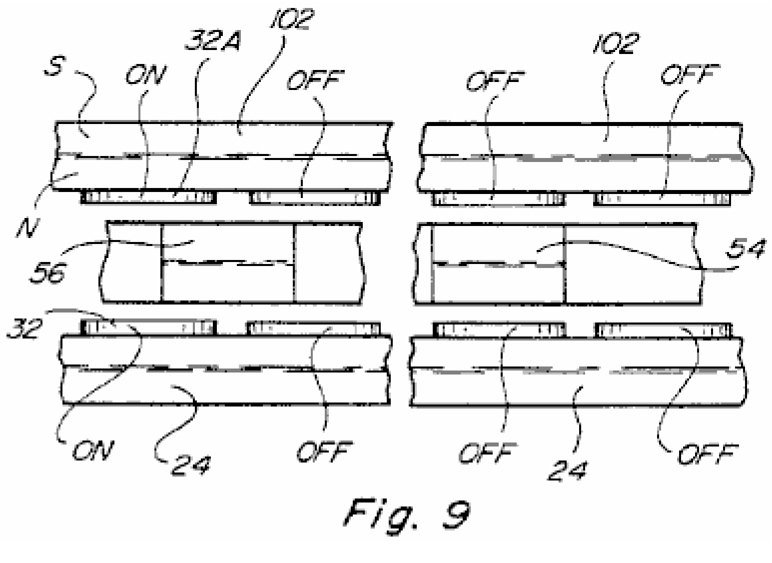

Fig.9 is a view similar to Fig.4 for the construction shown in Fig.7.

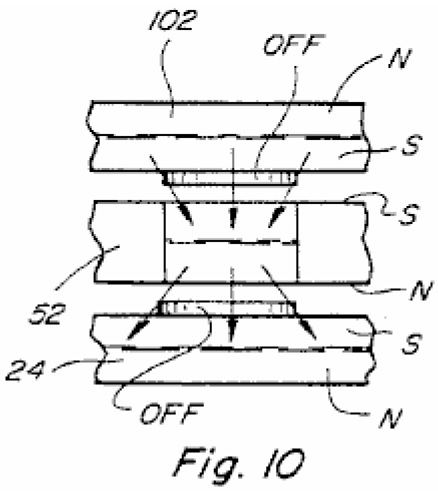

Fig.10 is a view similar to Fig.3 for the device shown in Fig.7 but with the polarity of one of the fixed permanent magnets reversed.

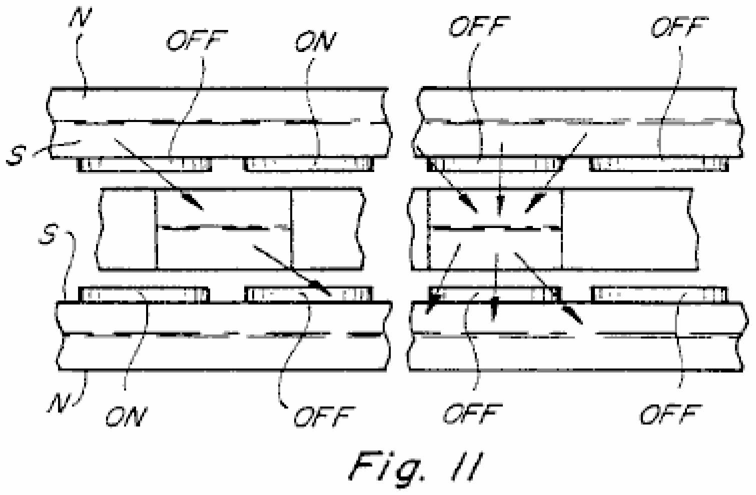

Fig.11 is a fragmentary view similar to Fig.4 for the device as shown in Fig.7 and Fig.10.

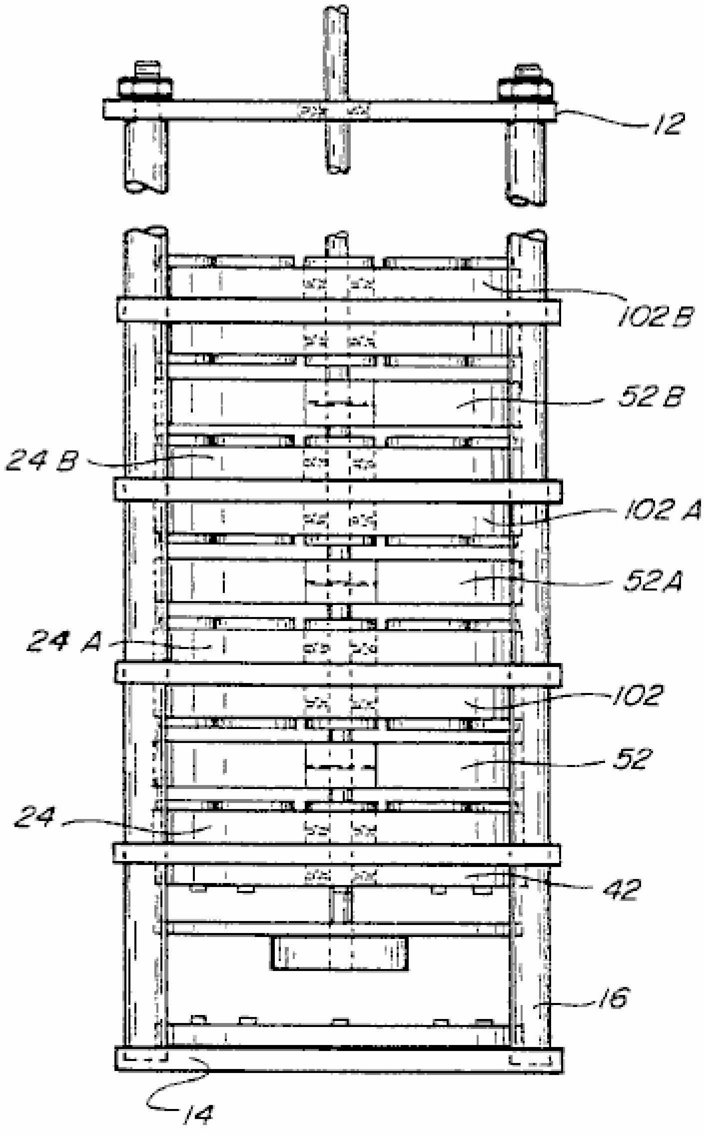

Fig. 12

Fig.12 is a side elevational view of another embodiment of the device.

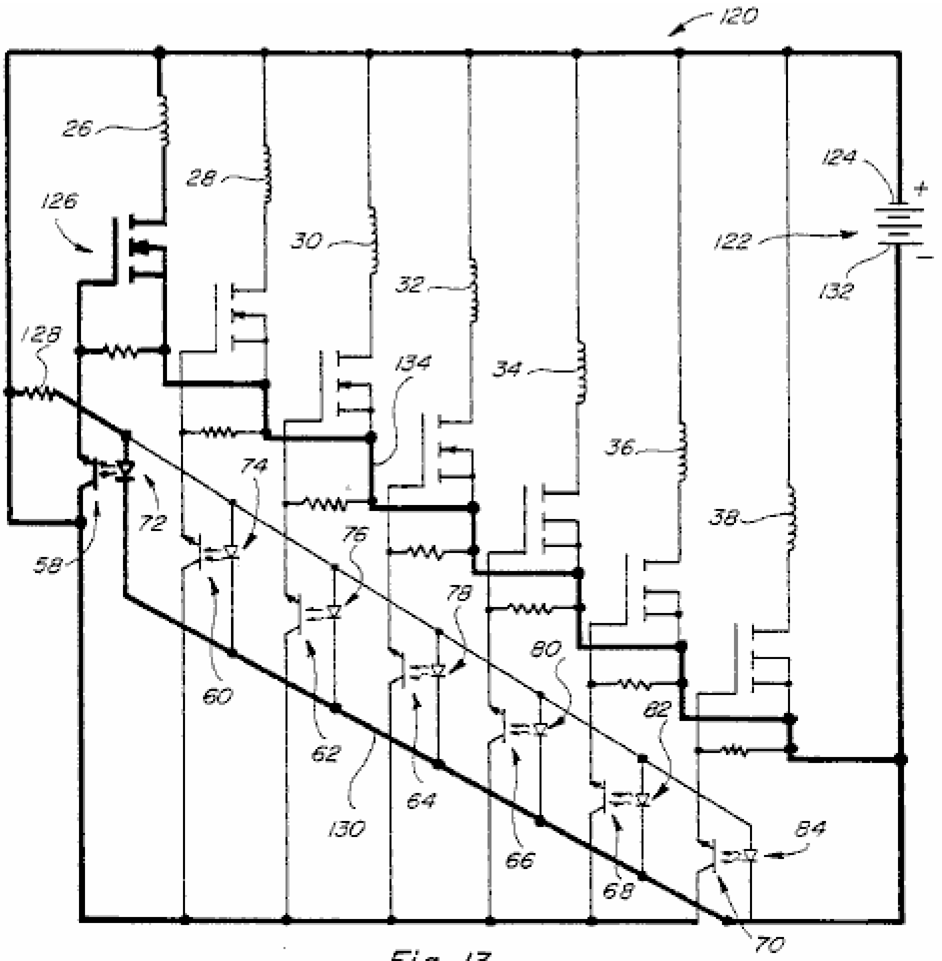

Fig. 13

Fig.13 is a schematic circuit diagram of the circuit for the devices of Figs. 1, 7 and 12.

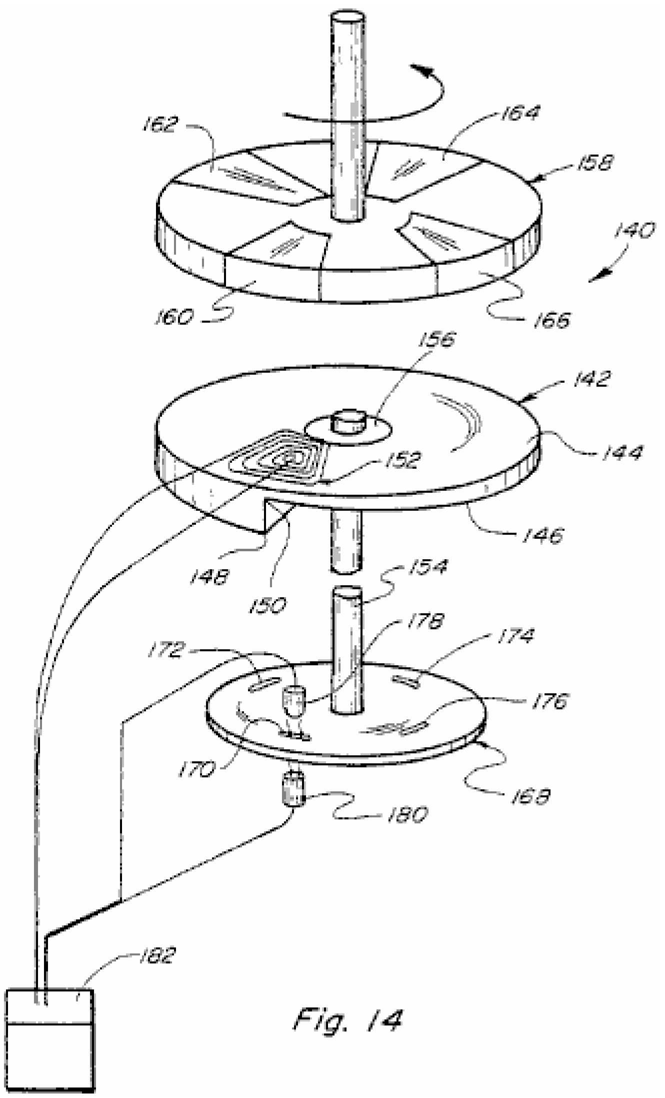

Fig. 14

Fig.14 is a perspective view of another embodiment.

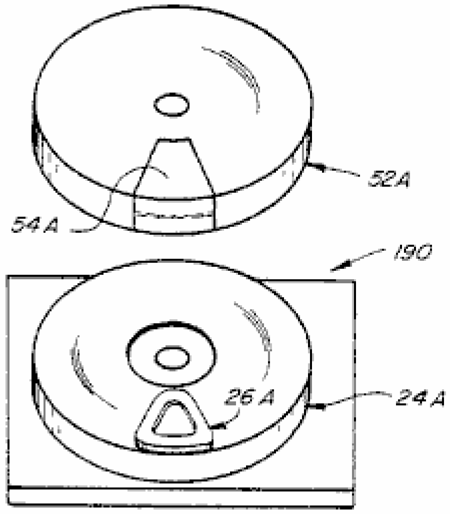

Fig. 15

Fig.15 is a simplified embodiment of the device showing the use of one rotating magnet and one coil positioned in the plane between the rotating and stationary magnets.

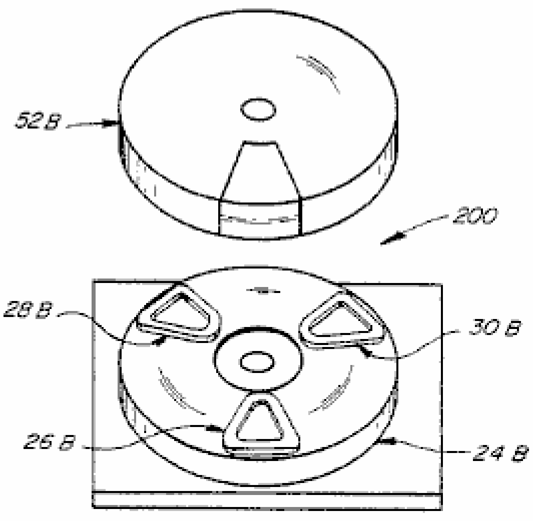

Fig. 16

Fig.16 is a simplified embodiment of the device showing use of one movable magnet and three coils arranged to be in a plane between the rotating and stationary magnets.

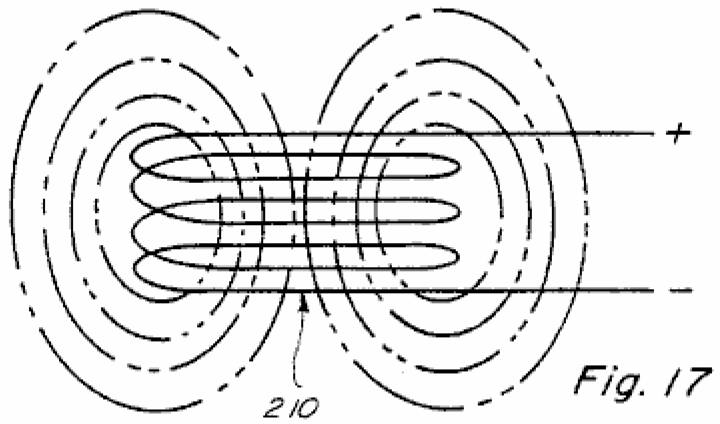

Fig. 17

Fig.17 is a side view of an air coil with a voltage applied across it and showing in dotted outline the field of the coil.

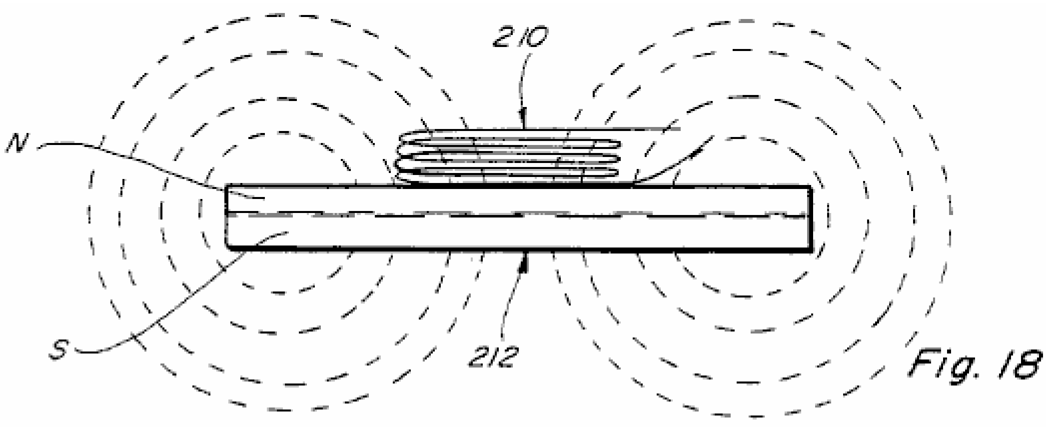

Fig. 18

Fig.18 is a view similar to Fig.17 but showing the air coil positioned adjacent to one side of a permanent magnet showing in dotted outline the magnetic field of the permanent magnet with no electric potential applied across the air coil.

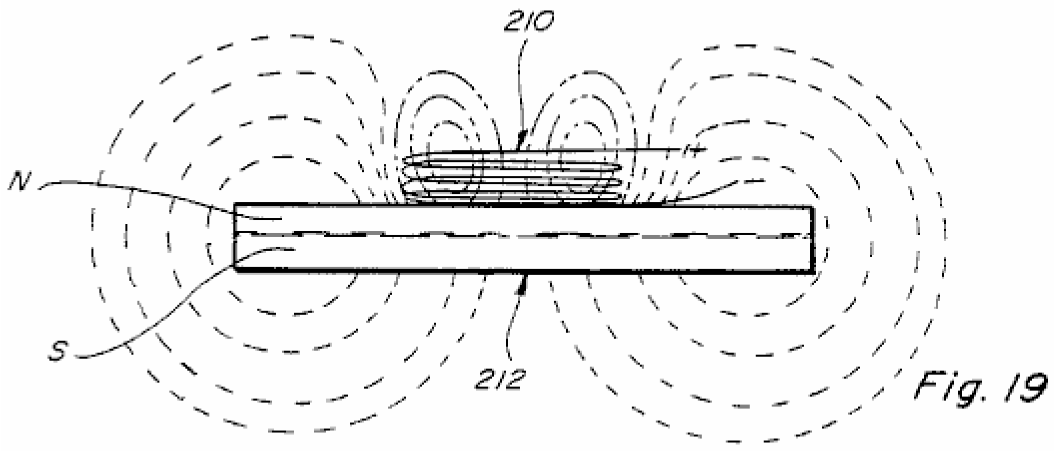

Fig. 19

Fig.19 is a side view similar to Fig.18 with an electric potential applied across the air coil, showing in dotted outline the shapes of the electric field of the air coil and the magnetic field of the permanent magnet.

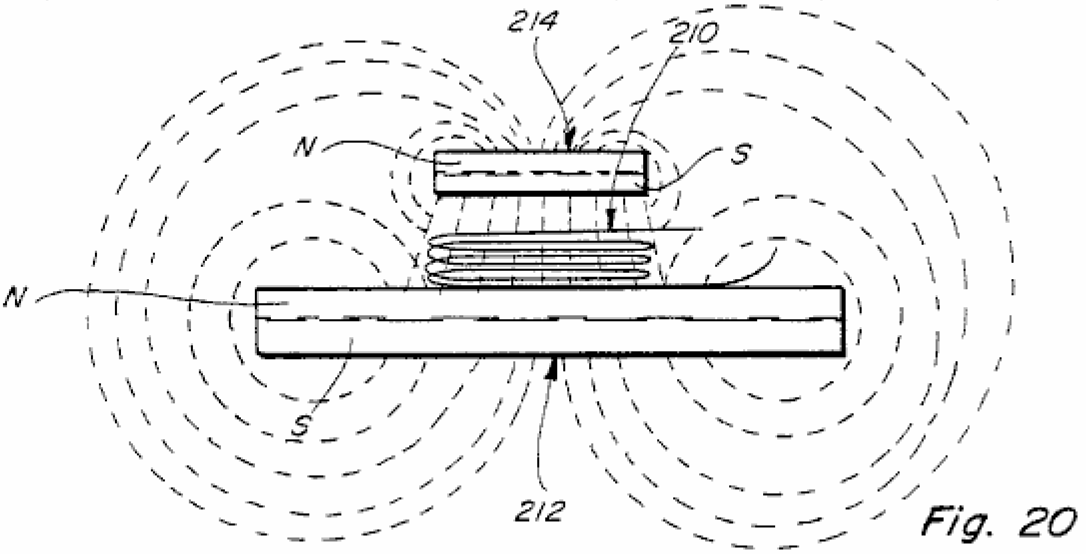

Fig. 20

Fig.20 is a side view similar to Fig.19 but showing a second permanent magnet positioned above the first permanent magnet and showing in dotted outline the magnetic fields of the two permanent magnets when no electric potential is connected across the air coil.

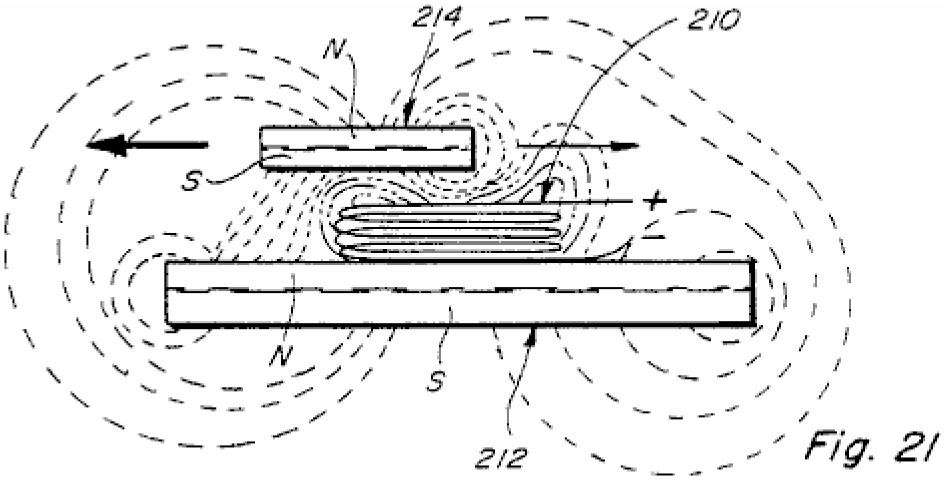

Fig. 21

Fig.21 is a view similar to Fig.20 but with the permanent magnets in an different relative position and with a voltage applied across the air coil, said view showing the shapes of the electro-magnetic field of the air coil and the modified shapes of the magnetic fields of the two permanent magnets; and

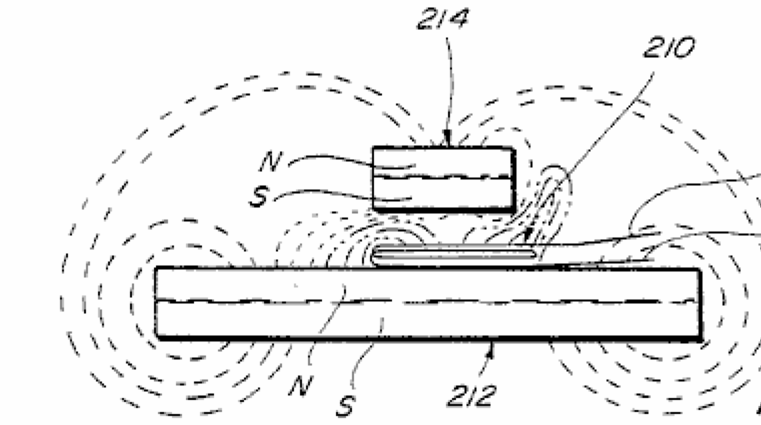

Fig. 22

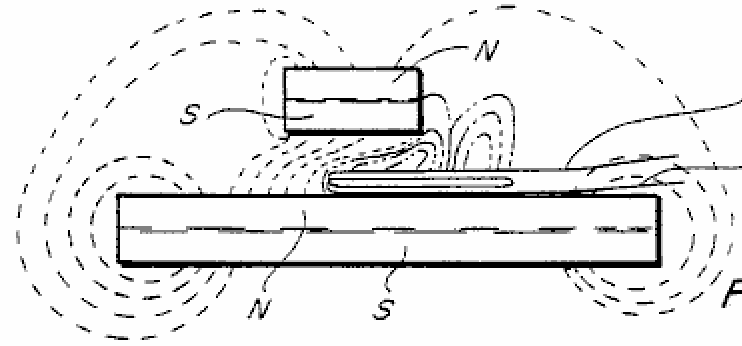

Fig. 23

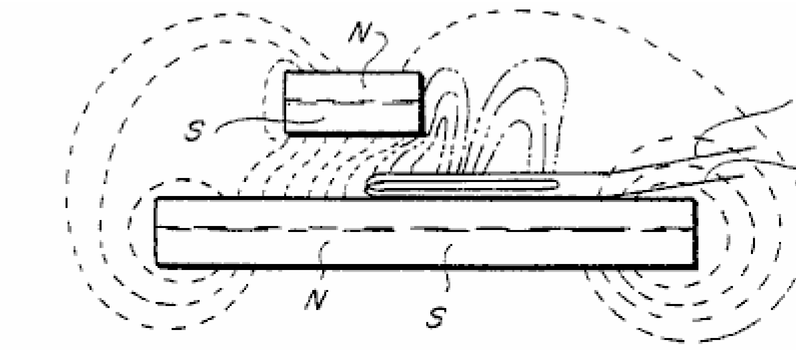

Fig. 24

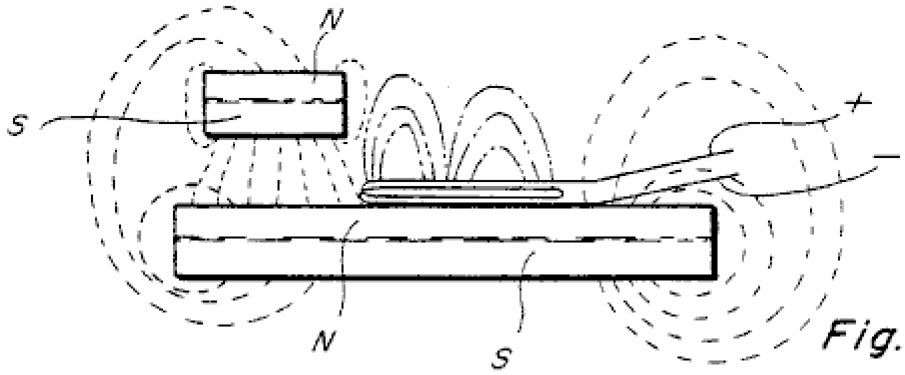

Fig. 25

Fig.22 to **Fig.25** are similar to Fig.21 and show the electro-magnetic field of the air coil and the magnetic fields of the magnets in four different relative positions of the permanent magnets.

DETAILED DESCRIPTION

In the drawings, the number **10** refers to a device constructed according to the present invention. The device **10** includes a stationary base structure including an upper plate **12**, a lower plate **14**, and spaced posts **16-22** connected between them.

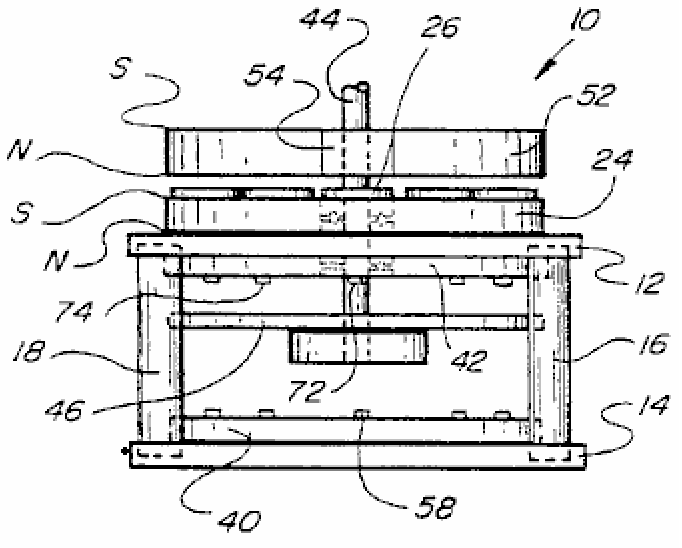

Fig. 1

Mounted on the upper plate **12** is a fixed permanent magnet **24** shown annular in shape which has its North pole adjacent to the upper surface of plate **12** and its South pole facing away from plate **12**.

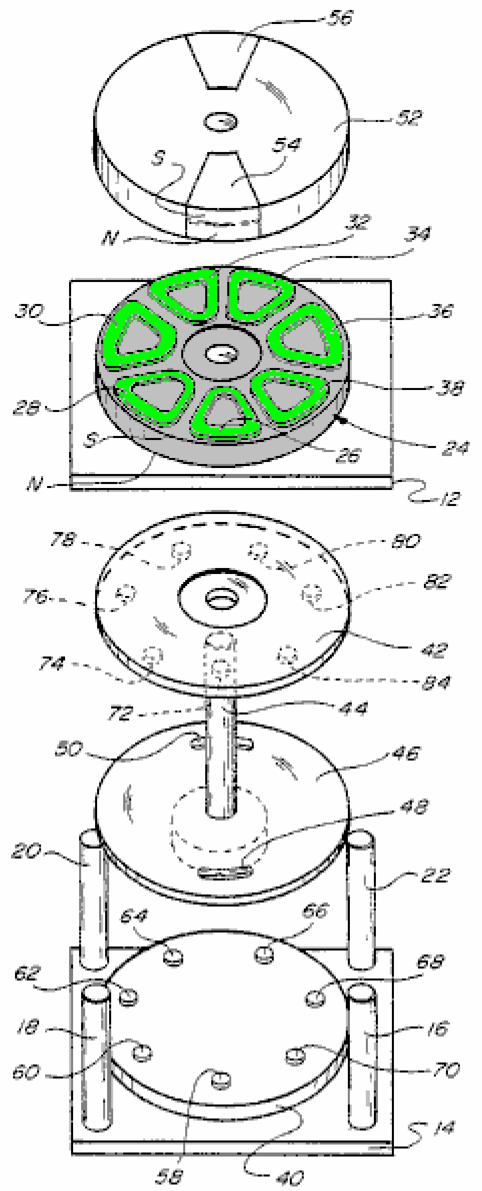

Fig. 2

Referring to **Fig.2**, the permanent magnet **24** is shown having seven coils **26-38** mounted flat on its upper surface. Seven coils are shown, and the coils **26-38** have electrical connections made through plate **12** to other circuit members which will be described later in connection with **Fig.13**. Another member **40** is mounted on the upper surface of the lower plate **14** and a similar member **42** is mounted on the underside of the plate **12**.

A shaft **44**, (shown oriented vertically for convenience) extends through aligned holes in the members **42**, **12** and **24**. The lower end of shaft **44** is connected to disk **46** which has a pair of curved openings **48** and **50** shown diametrically opposite to each other, a little in from the edge of disc **46**. The purpose of these openings **48** and **50** will be explained later on.

Shaft **44** is also connected to another disc **52** which is located on the shaft so as to be positioned adjacent to the coils **26-38**. Disc **52** has a pair of permanent magnets **54** and **56** mounted on or in it positioned diametrically opposite to each other. Magnets **54** and **56** have their north and south poles oriented as shown in **Fig.2**, that is with north poles shown on their lower sides and their south poles on the upper sides. This is done so that there will be mutual magnetic attraction and coupling between the magnets **54** and **56** and the fixed magnet **24**. The polarity of the magnets **54** and **56** and/or of the magnet **24** can also be reversed if desired for some purposes to produce relative magnetic repulsion between them.

Referring again to **Fig.2**, the lower plate **40** is shown having a series of phototransistors **58-70** mounted on its upper surface and spaced out as shown. These phototransistors are positioned under the centres of the coils **26-38** which are mounted on magnet **24**. An equal number of infra red emitters **72-84** are mounted on the under surface of the member **42** aligned with the phototransistors. There are seven infra red emitters **72-84** shown, each of which is in alignment with a respective one of the seven phototransistors **58-70** and with one of the seven coils **26-38**. This arrangement is such that when the shaft **44** and the components attached to it, including discs **46** and **52**, rotate relative to the other members including magnet *24*, the curved openings **48** and **50** pass under the infra red emitters and cause the phototransistors to switch on for a predetermined time interval. This establishes a sequence of energised circuits which powers coils **26-38**, one at a time, which in turn, causes a momentary interruption of the magnetic interaction between one of the permanent magnets **54** and **56** and magnet **24**.

When a coil is mounted on top of a permanent magnet such as permanent magnet **24** and energised it acts to concentrate the flux in a symmetrical magnetic field resulting in a non-symmetrical field when another permanent magnet is above the coil on magnet **24**. This results in uneven or non-uniform forces being produced when the coil is energised and this causes a torque between the two permanent magnets, which tries to move one of the permanent magnets relative to the other.

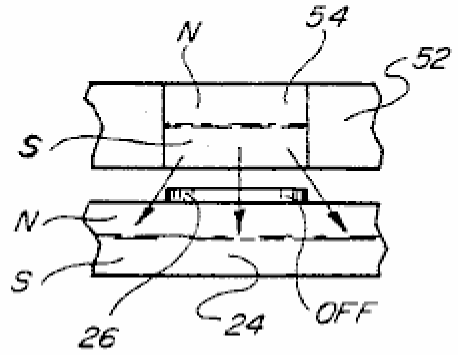

Fig. 3

Fig.3 shows the position when one of the magnets **54** is located immediately above one of the coils, say, coil **26**. In this position there would be magnetic coupling between the magnets **54** and **24** so long as there is no voltage across the coil **26**. However, if a voltage is placed across the coil **26** it will interrupt the magnetic coupling between the magnets **54** and **24** where the coil is located. This means that if there is any torque developed, it will be developed to either side of the coil **26**. Without energising the coil **26** there will be full attraction between the magnets **24** and **54** and no rotational force will be produced.

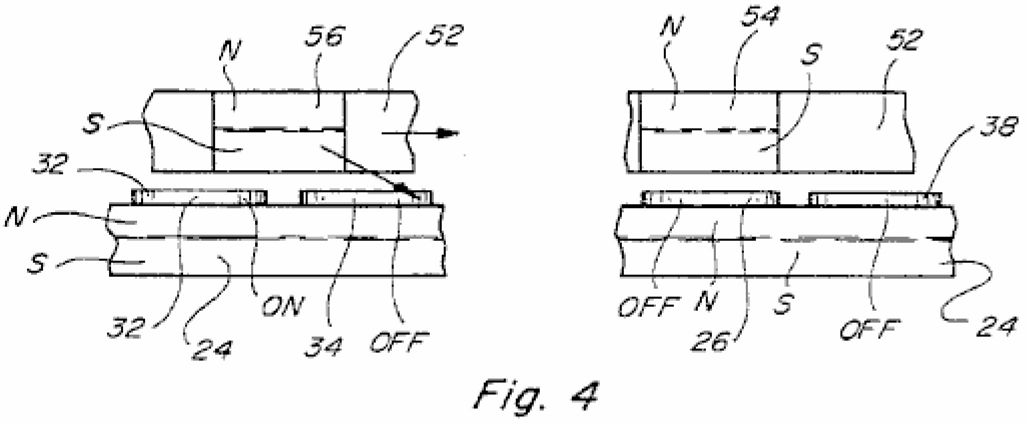

Fig. 4

Referring to **Fig.4** there is shown the relative positions of the movable magnets **54** and **56** for one position of disc **52**. For example, the magnet **54** is shown located immediately above the coil **26** while the magnet **56** is shown straddling portions of the coils **32** and **34**. If, in this position, coil **32** is energised but coils **34** and **26** are not energised, then the magnetic coupling between magnet **56** and magnet **24** will be oriented at an angle shown illustrated by the arrow in **Fig.4**, and this attractive coupling will tend to move disc **52** to the right. Since coil **26** is not powered up, there is full coupling between magnet **54** and magnet **24** but this has no effect since it does not have a directional force. At the same time, coil **38** which is the next coil over which the magnet **54** will move, is also not powered up and so it will have no rotational effect on disc **52**.

As disc **52** continues to rotate, different coils in the group **26-38** will be energised in sequence to continue to produce a rotational magnetic coupling force between disc **52** and magnet **24**. It should be noted, however, that all of the rotational force is produced by interaction between the permanent magnets and none of the rotational force is produced by the coils or by any other means. The coils are merely energised in sequence to control where the magnetic interaction occurs, and this is done in a manner to cause disc **52** to rotate. It should also be understood that one, two, or more than two, permanent magnets such as the permanent magnets **54** and **56** can be mounted on the rotating disc **52**, and the shape and size of the rotating disc **52** can be adjusted accordingly to accommodate the number of permanent magnets mounted in it. Also, disc **52** can be constructed of a non-magnetic material, the only requirement being that sufficient structure be provided to support the permanent magnets during rotation. This means that disc **52** need not necessarily be constructed to be round as shown in the drawing.

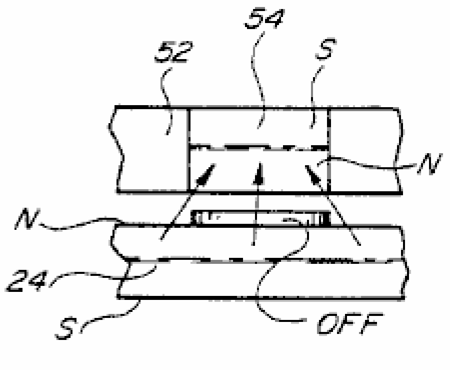

Fig. 5

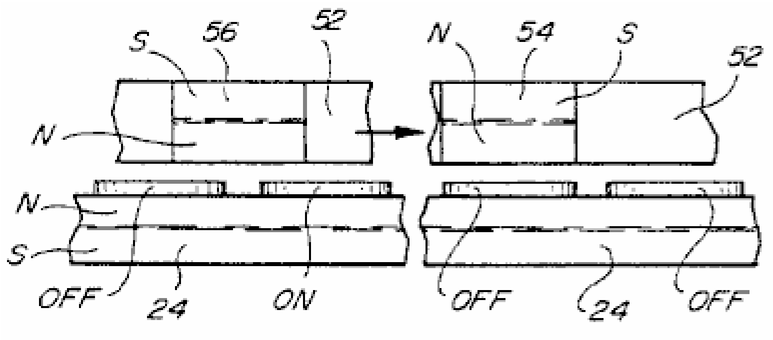

Fig. 6

Fig.5 and **Fig.6** are similar to **Fig.3** and **Fig.4** but show a construction where the permanent magnets **54** and **56** are turned over so that instead of having their north poles facing magnet **24** they have their south poles facing magnet **24** but on the opposite side of the coils such as coils **26-38**. The construction and operation of the modified device illustrated by **Fig.5** and **Fig.6** is similar to that described above except that instead of producing magnetic attraction forces between the magnets **54** and **56** and the magnet **24**, magnetic repulsion forces are produced, and these repulsion forces can likewise be used in a similar manner to produce rotation of the member **52**, whatever its construction.

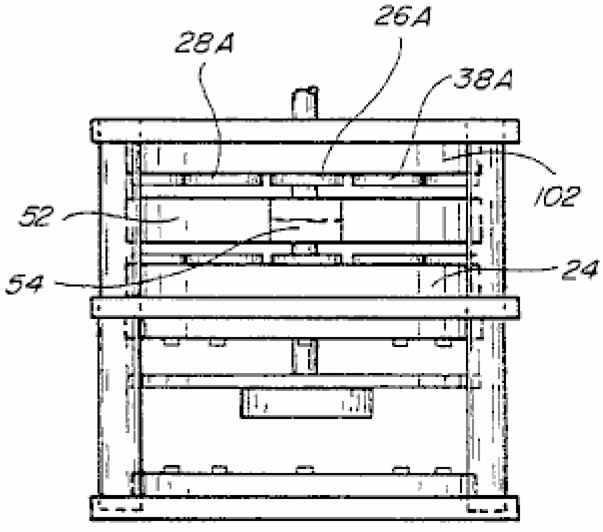

Fig. 7

Fig.7 shows a modified embodiment which includes all of the elements shown in **Fig.1** and **Fig.2** but in addition has a second stationary permanent magnet **102** which is mounted above rotating disc **52** and has its coil members such as coil members **26A-38A** mounted on its underside. Magnet **102** operates with the magnets **54** and **56** similarly to the magnet **24** and can operate in precisely the same manner, that is by producing attraction force between the magnet members or by producing repulsion forces between them, each being used to produce relative rotational movement between the rotor and the stator. It is also contemplated to make the construction shown in **Fig.7** so as to produce attraction forces between the magnets **54** and **56** on one side thereof and cooperating repulsion forces which add to the rotation generating forces produced on the opposite side.

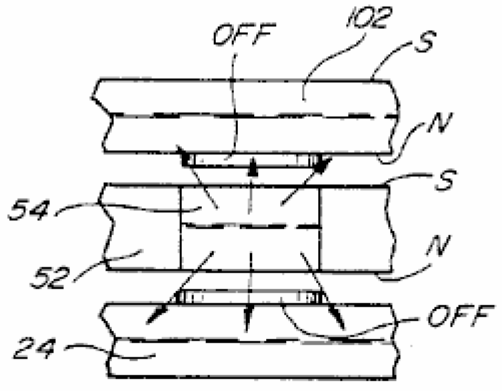

Fig. 8

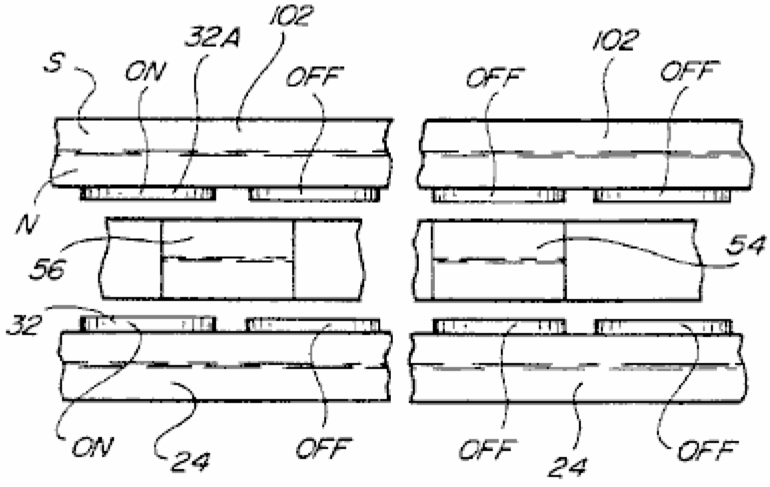

Fig. 9

Fig.8 and **Fig.9** are similar to **Fig.3** and **Fig.4** but show the relationship between the magnets **54** and **56** and the members **24** and **102** located on opposite sides. These figures show one form of interaction between the rotating magnets **54** and **56** and the stationary magnets **24** and **102** located as shown in **Fig.7**. In this construction, the device produces attractive rotating force only.

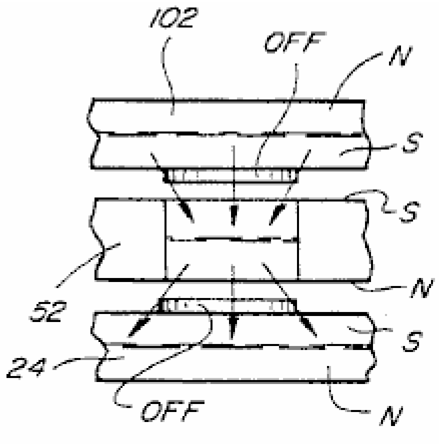

Fig. 10

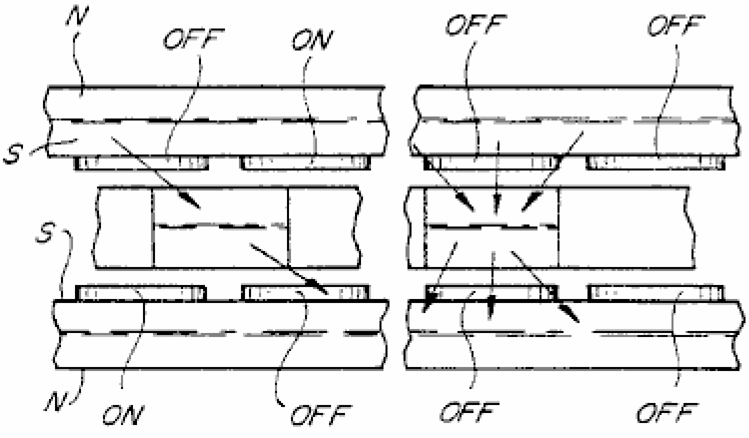

Fig. 11

Fig.10 and **Fig.11** are similar to **Fig.8** and **Fig.9** except that in these figures both attraction and repulsion forces are shown being produced in association with the stationary magnets on opposite sides of the rotating magnets. Note also that the coils being energised on opposite sides of disc **52** are energised in a different arrangement.

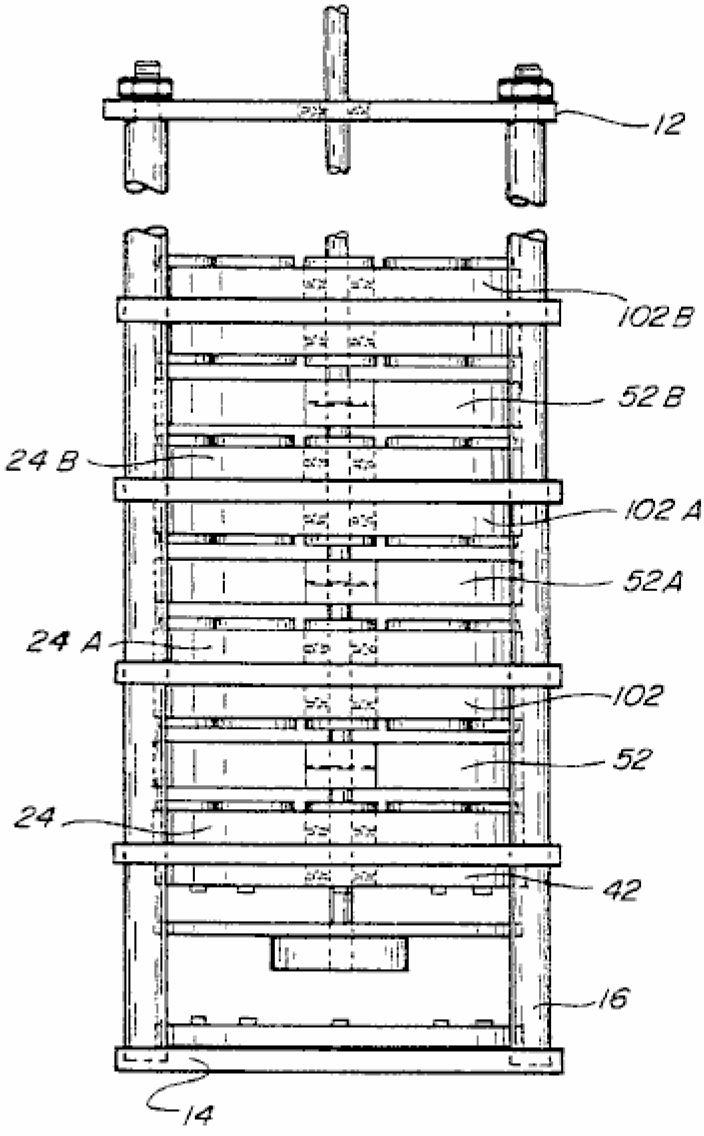

Fig. 12

Fig.12 is a side view similar to **Fig.7** but showing the way in which several stationary and rotating magnetic members such as the discs **24** and **102** can be mounted on the same shaft, in almost any number of repeating groups to increase the amount of torque produced by the device. In **Fig.12**, the same power source and the same circuit arrangement can be used to energise the phototransistors and the infra red emitters. However, depending upon whether attraction or repulsion forces are used to produce the rotation or some combination of them, will depend upon the order in which the coils associated with the stationary magnetic members are energised.

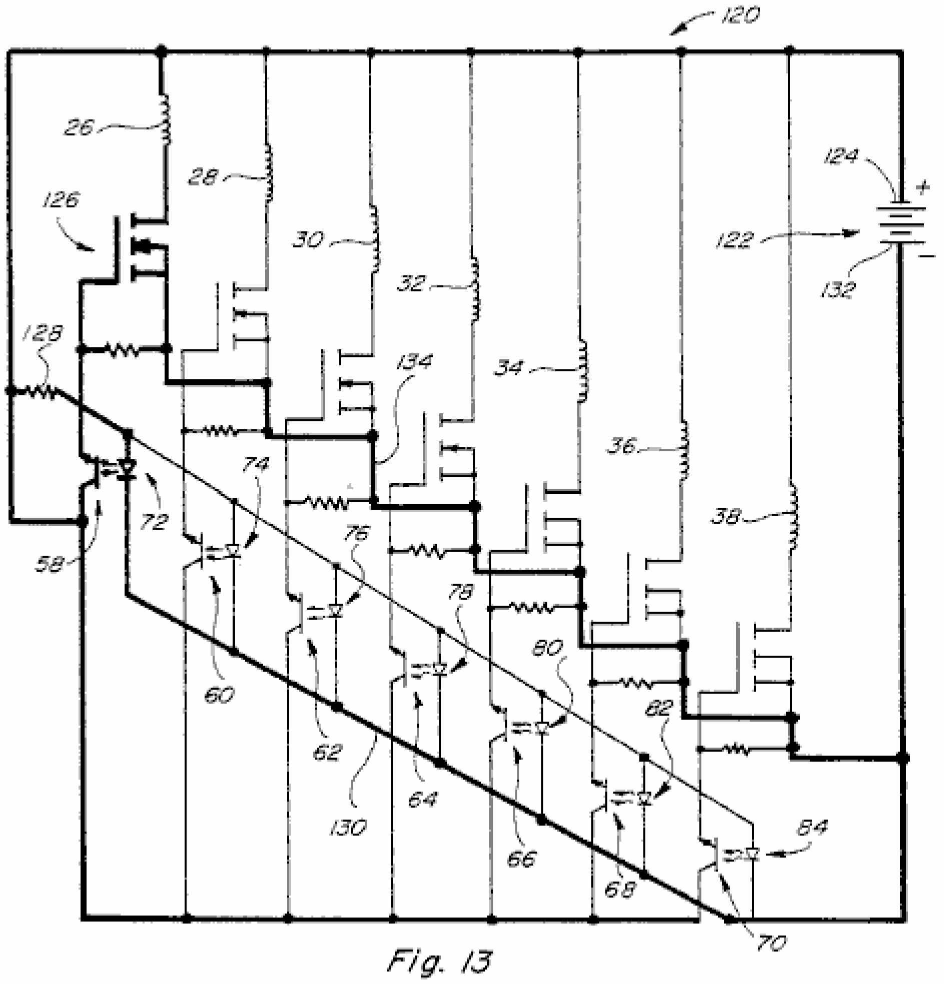

Fig. 13

Fig.13 is a circuit diagram for the device shown in **Fig.1** and **Fig.2**, showing the circuit connections for the coils **26-38** and for the circuit elements associated with them. A similar circuit can be used for the construction shown in **Fig.7** and **Fig.12**. The circuit also includes connections to the various phototransistors and infra red emitters.

In **Fig.13**, the circuit **120** is shown including a power supply **122** which may be a battery power supply, a rectified AC power supply or an AC or pulsed power supply. The positive side **124** of the power supply **122** is shown connected to one side of each of the coils **26-38**, coil **26** and the circuits associated with it being shown in bold outline and including connections to one side of a resistor **128** and to one side of the photo transistors **58-70**. The opposite side of the coil **26** is connected to one terminal of MOSFET **126**. The opposite side of the resistor **128** is connected to one side of the infra red emitter **72**, as well as to the corresponding sides of all of the other infra red emitters **74-84**. The opposite sides of the infra red emitters **72-84** are connected by lead **130** to the negative terminal side **132** of the power supply **122**. With the circuit as shown, the infra red emitters **72-84** are all continuously energised and produce light which can be detected by the respective phototransistors **58-70** when one of the openings **48** or **50** passes between them. When this happens, the respective phototransistor **58** will conduct and in so doing will apply positive voltage on the associated MOSFET **126**, turning the MOSFET on, and causing the voltage of the source **122** to also be applied across the coil **26**. The circuit for this is from the source **122** through the coil **26**, through the MOSFET **126** to and through the lead **134** to the opposite side of the source **122**. When the supply voltage is applied across the coil **26**, it operates to limit or prevent magnetic communication between whichever one of the magnets **54** or **56** happens to be positioned adjacent to the coil **26** which is in the space between that magnet **54** or **56** and the magnet **24**. This circuit is shown in bold in **Fig.13**. By properly timing and controlling the application of voltage to the various coils **26-38** in the manner described, the magnetic coupling between the magnets **54** and **56** and the magnet **24** can be accurately controlled and cause angular magnetic attraction between the magnet **54** (or **56**) and magnet **24**, which angular attraction (or repulsion) is in a direction to cause rotation of the rotating parts of the structure shown in **Figs. 1**, **2**, **7** and **12**. It should be understood that each of the coils **26-38** will be controlled in the same manner, that is, will have a voltage appearing across it at the proper time to control the direction of the magnetic coupling in a manner to produce rotation. The rotating portions will continue to rotate and the speed of rotation can be maintained at any desired speed. Various means can be used to control the speed of rotation such as by controlling the timing of the DC or other voltage applied to the various coils, such as by using an alternating or pulsed current source instead of a direct current source or by loading the device to limit its rotational speed.

It is especially important to note that the energy required to operate the subject device is minimal since very little electrical energy is drawn when voltage is applied across the various coils when they are energised.

A well known equation used for conventional motor art, is:

Power (in watts) = Speed x Torque / 9.55

Hence,

W = S x T / 9.55

This equation has limited application to the present device because in the present device the torque is believed to be constant while the speed is the variable. The same equation can be rewritten:

T = 9.55 x W / S or S = 9.55 X W / T

These equations, if applicable, mean that as the speed increases, the watts divided by the torque must also increase but by a factor of 9.55. Thus if torque is constant or nearly constant, as speed increases, the power output must increase and at a very rapid rate.

It should be understood that the present device can be made to have any number of stationary and rotating magnets arranged in stacked relationship to increase the power output, (see **Fig.12**) and it is also possible to use any desired number of coils mounted on the various stationary magnets. In the constructions shown in **Figs. 1**, **7**, and **12** seven coils are shown mounted on each of the stationary magnets but more or fewer coils could be used on each of stationary magnet depending upon the power and other requirements of the device. If the number of coils is changed the number of light sources and photo-detectors or transistors will change accordingly. It is also important to note that the timing of the turning on of the various phototransistors is important. The timing should be such as that illustrated in **Fig.4**, for example, when one of the coils such as coil **32** is energised to prevent coupling in one direction between magnet **56** and magnet **24**, the adjacent coil **34** will not be energised. The reasons for this have already been explained.

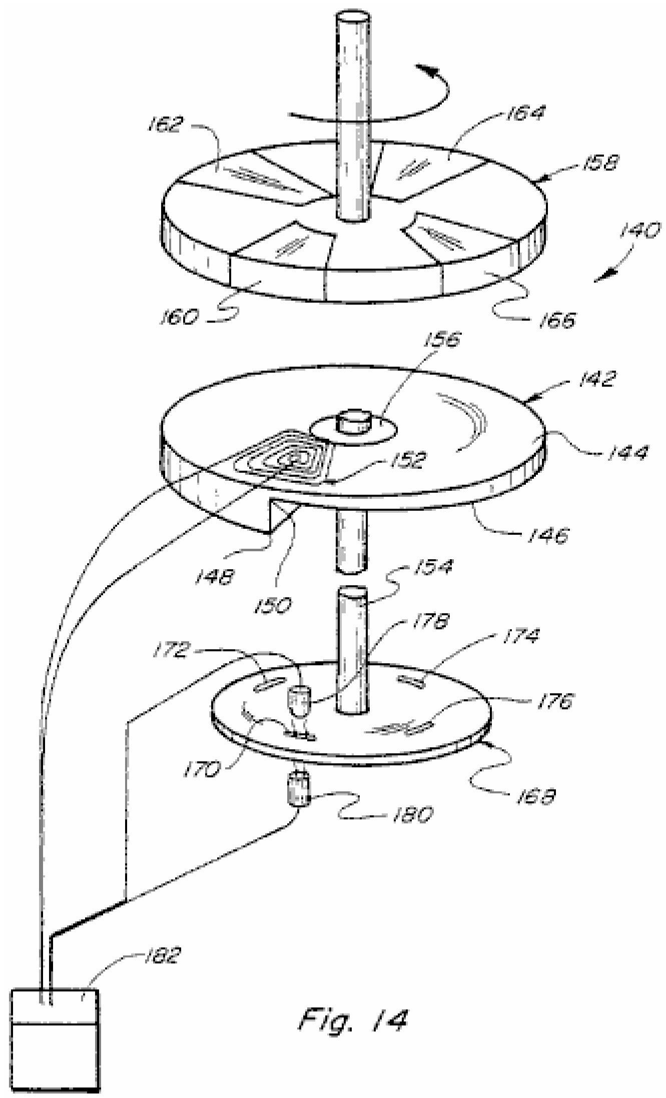

Fig. 14

Fig.14, shows another embodiment **140** of this motor. This includes a stationary permanent magnet **142** which has a flat upper surface **144** and a lower surface **146** that is circumferentially helical so that the member **142** varies in thickness from a location of maximum thickness at **148** to a location of minimum thickness at **150**. The thickness of the member **142** is shown varying uniformly. Near the location of the thickest portion **148** of the permanent magnet **142** and adjacent to the surface **144** is an air coil **152** shown formed by a plurality of windings. A shaft member **154** is journaled by the bearing **156** to allow rotation relative to the stationary permanent magnet **142** and is connected to a rotating disc **158**. The disc includes four spaced permanent magnets **160**, **162**, **164** and **166** mounted on or in it. The permanent magnets **160-166** are positioned to rotate close to the stationary permanent magnet **142** but with the coil **152** positioned between them. Coil **152** is connected into a circuit similar to that shown in **Fig.13** and so the circuit will not be described again.

The principals of operation of the device **140** shown in **Fig.14** are similar to those described above in connection with **Fig.1** and other figures. It is important to note, however, that the permanent magnets **160-166** rotate relative to the permanent magnet **142** because of the increasing coupling between them and the permanent magnet due to the increasing peripheral thickness of the permanent magnet. Thus the member **158** will rotate in a counter-clockwise direction as shown, and each time one of the magnets **160-166** moves into a position adjacent to the thickest portion **148** of the fixed permanent magnet **142** the coil **152** will have voltage applied across it, otherwise there would be a tendency for the member **158** to stop or reduce the rotational force. In order to overcome this the coil **152** is energised each time one of the permanent magnets **160-166** is in the position shown. The rotating disc **158** is connected through the shaft **154** to rotating disc **168** which has four openings **170**, **172**, **174** and **176** corresponding to the locations of the permanent magnets **160-166** so that each time one of the permanent magnets moves to a position adjacent to the thickest portion **148** of the stationary permanent magnet **142** the coil **152** will be energised and this will reduce or eliminate the coupling between the rotating and stationary magnets that would otherwise slow the rotating portions down.

The circuit connected to the coil **152** includes the same basic elements described above in connection with **Fig.13** including varying a photocell **178**, an infra red emitter **180** and a MOSFET **182** connected into a circuit such as that shown in **Fig.13**. The timing of the energising of the coil **152** is important and should be such that the coil will be energised as the respective permanent magnets **160-166** move to a position in alignment or substantial alignment with the thickened portion **148** of the stationary permanent magnet **142**.

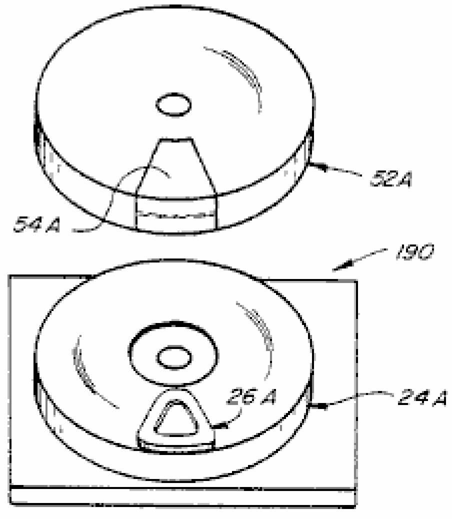

Fig. 15

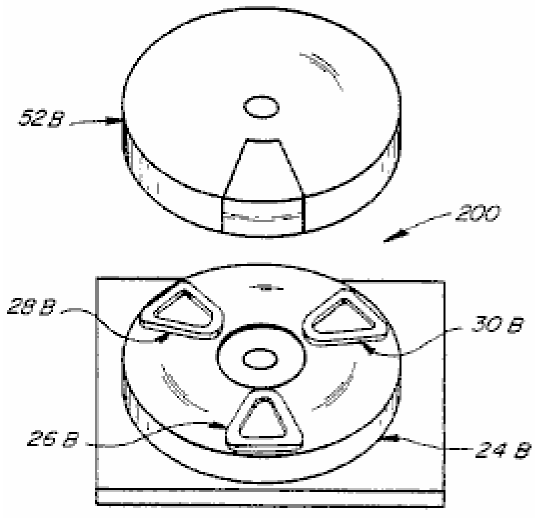

Fig. 16

Fig.15 shows a basic simplified form **190** of the present device which includes a rotary member **52A** having a single permanent magnet portion **54A** mounted on it. The device also has a stationary permanent magnet **24A** with a single air coil **26A** positioned in the space between the members **52A** and **24A** in the manner already described. The construction **190** is not self-starting as are the preferred embodiments such as embodiment **10** but the rotary portions will rotate continuously once the device is started as by manually rotating the rotary portions. The construction **190** will have other portions as described above but the output from the construction will be less than the output produced by the other constructions.

Fig.16 shows another simplified version **200** of the device wherein the member **52B** is similar to the corresponding rotating member **52A** shown in **Fig.15**. However, the fixed structure including the permanent magnet **24B** has three windings **26B**, **28B** and **30B** located at spaced intervals adjacent to the upper surface of it. The construction shown in **Fig.16** will produce more output than the construction shown in **Fig.15** but less than that of the other constructions such as that shown in **Figs. 1**, **2**, **7** and **12**. Obviously, many other variations of the constructions shown in the application are also possible including constructions having more or fewer coils, more or fewer rotating magnetic portions, more or fewer rotating members such as disc **52** and more or fewer stationary members such as magnets **24** and **142**.

Figs.17-25 illustrate some of the underline principles of the present invention.

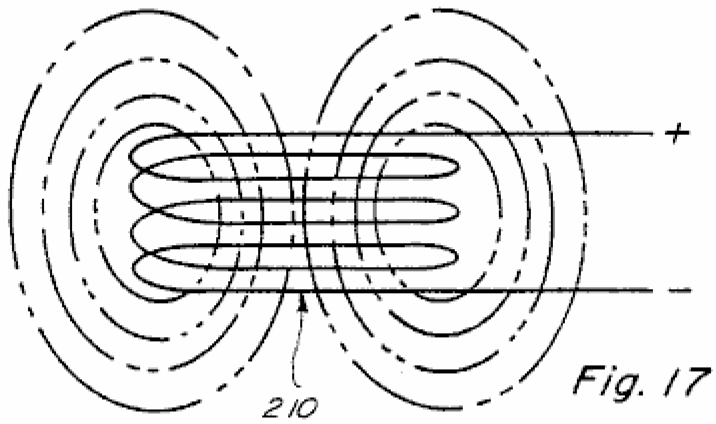

Fig. 17

Fig.17 shows an air coil **210**, positioned in space, with an electric potential applied across it. With the energising voltage applied, the electro-magnetic field of air coil **210** extends substantially equally in the space above and below the coil as shown in dotted outlined.

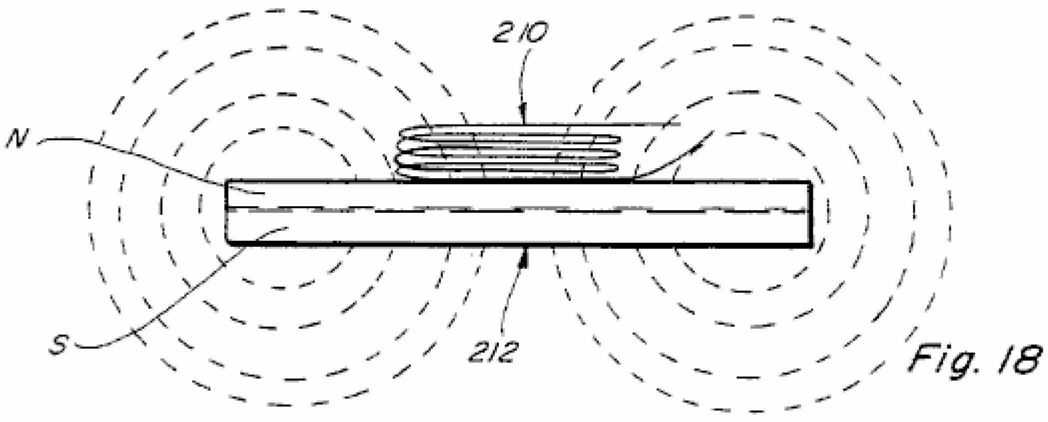

Fig. 18

Fig.18 shows the air coil **210** positioned adjacent to one side (the north side) of permanent magnet **212**. In **Fig.18** no voltage is applied across the air coil **210** and therefore the coil does not produce an electro-magnetic field as in **Fig.17**. Under these circumstances, the air coil **210** has no effect on the magnetic field of the permanent magnet **212** and the field of the permanent magnet is substantially as shown by the dotted outlines in **Fig.18**.

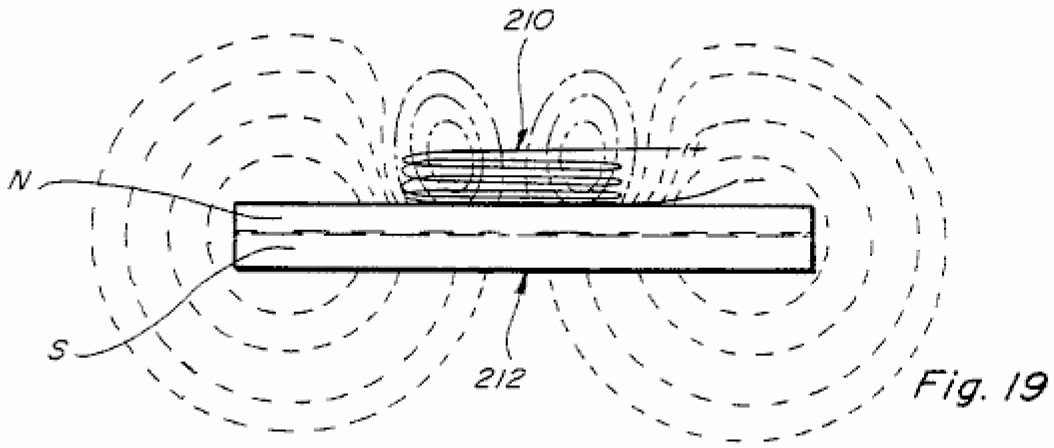

Fig. 19

Fig.19 is similar to **Fig.18** except that in **Fig.19** the air coil **210** has an electric potential applied across it and therefore has an established electro-magnetic field shown again by dotted outline.

The electro-magnetic field of the air coil **210** modifies the magnetic field of the permanent magnet **212** in the manner shown. If coil **210** is placed in contact with, or close to the surface of, the permanent magnet and it is energised so that its polarity is opposite to that of the permanent magnet then the field produced is similar to that shown in **Fig.19**. Note that the field of coil **210** and the field of the permanent magnet **212** directly beneath the air coil **210** are in opposition and therefore act to cancel one another. Coil **210** would be defined to produce a counter-magnetomotive force which acts to cancel the field of the permanent magnet **212** in the region where the air coil **210** exists and the amount of the field in that region of the permanent magnet **212** that is cancelled is the remainder of the difference in magnetomotive force between the region of the permanent magnet **212** and the counter magnetomotive force of the air coil **210**. Note that, since the field of permanent magnet **212** is only altered in the region of the air coil **210**, the geometric magnetic field characteristics of the permanent magnet **212** can be altered selectively based upon the size of the coil **210**, the number of air coils **210** and the amount of counter magnetomotive force being produced by the air coil **210**.

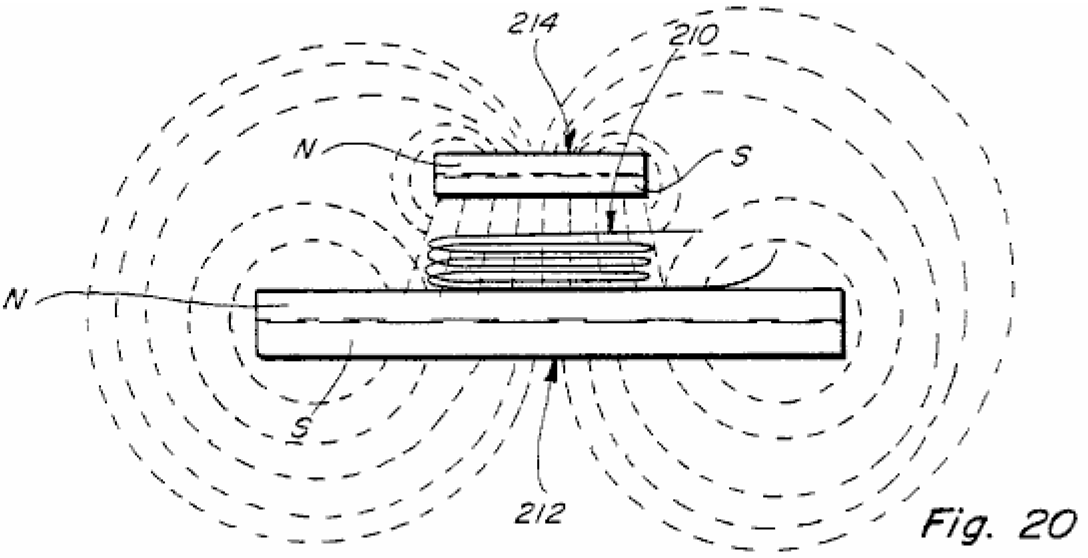

Fig. 20

Fig.20 is similar to **Fig.19** except that a second permanent magnet **214** is positioned at a location spaced above the air coil **210**. In **Fig.20** no voltage is applied across the air coil **210** and therefore the air coil **210** does not have an electro-magnetic field. Thus **Fig.20** shows only the combined affect of the fields of the permanent magnets **212** and **214**. Since the permanent magnets **212** and **214** are positioned so that their respective north and south poles are close together, there will be a strong attractive force between them at the location of the air coil **210**.

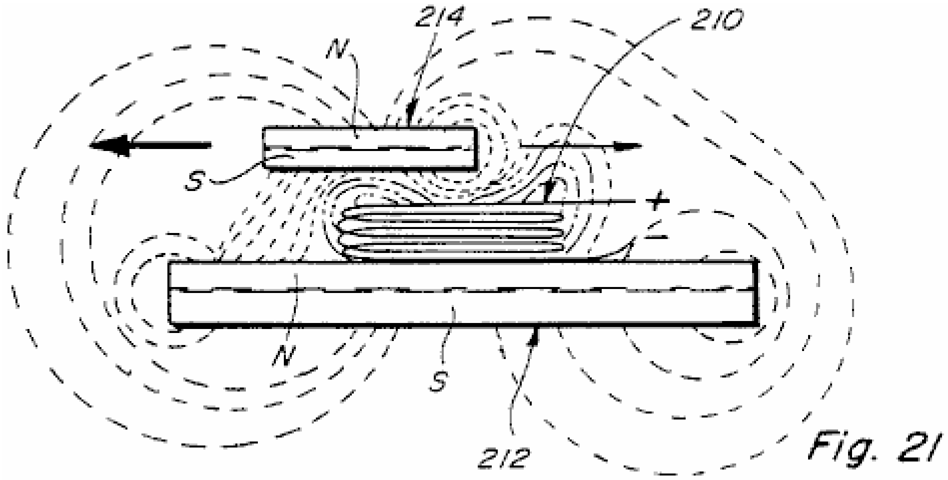

Fig. 21

Fig.21 is a view similar **Fig.20** but with an electric potential applied across the air coil **210** and with the upper permanent magnet **214** displaced to the left relative to its position in **Fig.20**. Note that in **Fig.21** the shape of the electro-magnetic field of the air coil **210** is concentrated and shifted somewhat to the right and upward. This shift of the electro-magnetic field concentrates the magnetic coupling between the magnets **212** and **214** to the left thereby increasing the tendency of the upper permanent magnet **214** to move to the left. A much smaller magnetic coupling occurs between the right end of the permanent magnets **212** and **214** and thus the force tending to move the permanent magnet **214** to the right is much less than the force tending to move it to the left. This is illustrated by the size of the arrows shown in **Fig.21**.

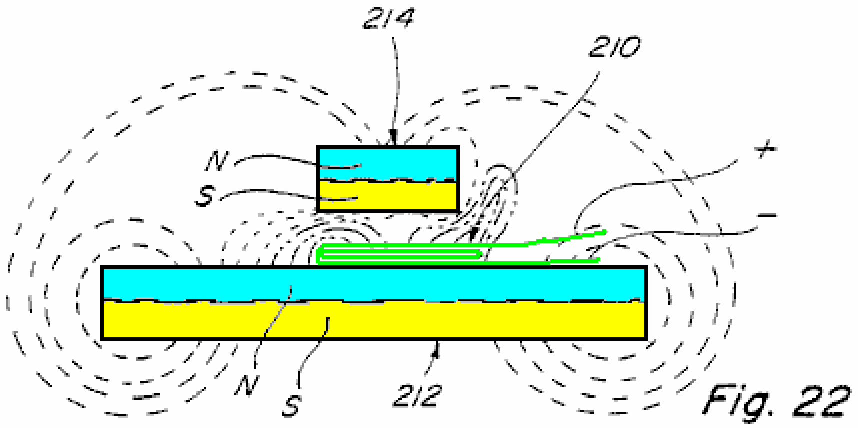

Fig. 22

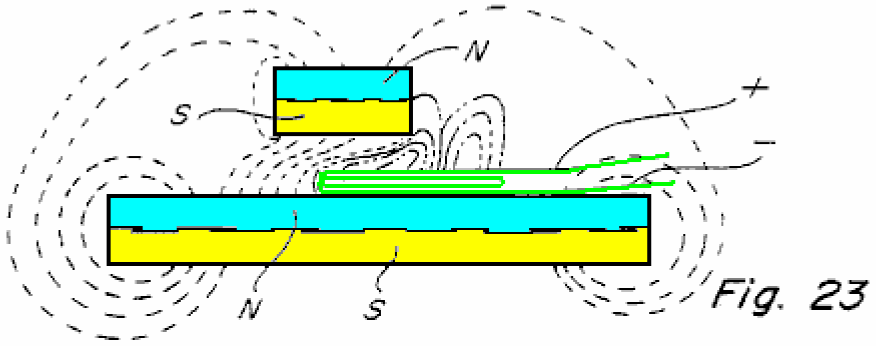

Fig. 23

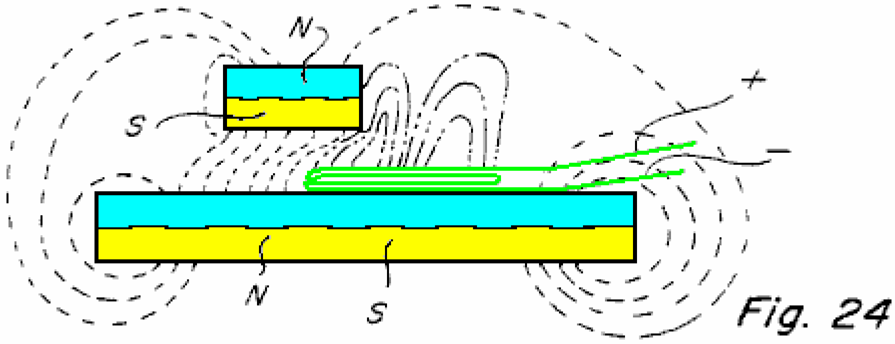

Fig. 24

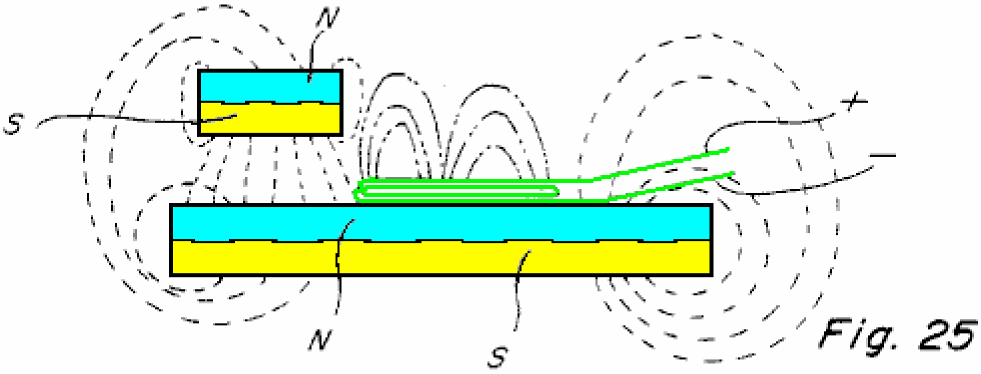

Fig. 25

Figs. 22-25 show four different positions of the upper permanent magnet **214** relative to the lower permanent magnet **212**. In **Fig.22** because of the position of the upper permanent magnet **214** relative to the air coil **210** there is a concentration of the magnetic coupling force tending to move the upper permanent magnet **214** to the left. This force increases in **Fig.23** and **Fig.24** until the upper permanent magnet **214** reaches the position shown in **Fig.25** where all of the magnetic coupling is directed substantially vertically between the permanent magnets **212** and **214** and in this position there is little or no torque as a result of coupling energy between the permanent magnets **212** and **214** tending to move them relative to one another.

The principles illustrated in **Figs. 17-25** are at the heart of the present invention and explain where the energy comes from to produce relative movement between the permanent magnets.

The present device has application for very many different purposes and applications including almost any purpose where a motor or engine drive is required and where the amount of energy available and/or required to produce the driving force may vary little to nil. Applicant has produced devices of the type described herein capable of rotating at very high speed in the order of magnitude of 20,000 RPMs and with substantial torque. Other lesser speeds can also be produced, and the subject device can be made to be self starting as is true of the constructions shown in **Figs. 1**, **2**, **7** and **12**. Because of the low power required to operate the device applicant has been able to operate same using a commercially available battery such as a nine volt battery.

CLAIMS

1. A device to control the magnetic interaction between spaced permanent magnets comprising:

a first permanent magnet having opposite surfaces with north and south poles respectively,

a second permanent magnet spaced from and movable relative to the first permanent magnet and having opposite surfaces with north and south poles respectively, one of which is positioned in close enough proximity to one of the surfaces of the first permanent magnet to produce magnetic interaction between them,

a coil of conductive metal positioned in the space between the first and second permanent magnets,

a source of electrical energy and switch means connected in series therewith across the coil whereby when the switch means are closed the electrical energy from said source is applied across the coil whereby the magnetic interaction between the first and second permanent magnets is changed, and

means to control the opening and closing of the switch means.

2. A device for producing rotational movement and torque comprising:

a member journaled for rotational movement about an axis of rotation, the rotating member having at least a portion adjacent the periphery thereof formed of a permanently magnetized material,

a stationary member formed of permanently magnetized material mounted adjacent to the peripheral portion of the rotating member axially spaced from it whereby a magnetic interaction is produced between the stationary and the rotating members in predetermined positions of the rotating member,

at least one coil positioned extending into the space between the stationary and rotating members,

means including a source of electric potential and switch means connected in series across the coil, and

means to predeterminately control the opening and closing of the switch means during rotation of the rotating member to vary the magnetic interaction in a way to produce rotation of the rotating member.

3. Means to predeterminately vary the magnetic interaction between first and second spaced permanent magnet members comprising a first permanent magnet member having north and south poles, a second permanent magnet member having north and south poles spaced from the first permanent magnet member by a gap between them, a coil positioned extending into the gap between the first and second permanent magnet members, means connecting the coil across a circuit that includes a source of voltage and switch means connected in series therewith so that when the voltage source is connected across the coil it effects the magnetic interaction between the first and second permanent magnet members, and means for mounting the first permanent magnet member for movement relative to the second permanent magnet member and relative to the coil in the gap between them.

4. The device of claim 3 wherein the first and second permanent magnet members are mounted to produce magnetic attraction between them.

5. The device of claim 3 wherein the first and second permanent magnet members are mounted to produce magnetic repulsion between them.

6. The device of claim 3 wherein the means mounting the first permanent magnet member includes means mounting the first permanent magnet member for rotational movement relative to the second permanent magnet member and the switch means includes cooperative optical means having a first portion mounted for movement with the first permanent magnet member and a second portion associated with the second permanent magnet member.

7. The device of claim 6 wherein the switch means includes a light source and a light sensitive member associated respectively with the first and second permanent magnet members, and control means for them mounted for movement with the first permanent magnet.

8. The device of claim 3 wherein the second permanent magnet member is an annular permanent magnet member having one of its poles on one side of the gap and the other of its poles opposite thereto, means mounting the first permanent magnet member for rotational movement relative to the second permanent magnet member, said first permanent magnet member having one of its poles on one side of the gap, and a plurality of circumferentially spaced coils mounted in the gap between the first and second permanent magnet members.

9. The device of claim 8 wherein the first permanent magnet member includes two circumferentially spaced portions.

10. Means for producing rotational movement comprising:

a support structure having a first permanent magnet mounted thereon, said first permanent magnet having a north pole adjacent one surface and a south pole adjacent to the opposite surface,

means for mounting a second permanent magnet for rotational movement in a plane parallel to the first permanent magnet, the second permanent magnet occupying an curved portion of said mounting means less than the entire circumference of said mounting means and having a north pole adjacent to the opposite surface and positioned so that there is a magnetic interaction between the spaced first and second permanent magnets across a gap between them in at least one position thereof,

at least one air coil positioned in the gap between the first and second permanent magnets,

a source of electric potential and switch means for controlling the application of the electric potential from said source across the air coil, the application of voltage across the air coil effecting the magnetic interaction between the first and second permanent magnet members in certain positions of the second permanent magnet relative to the first permanent magnet and in such a manner as to produce rotational movement of the second permanent magnet.

11. The device for producing rotational movement of claim 10 wherein a third permanent magnet is mounted on the support structure on the opposite side of the second permanent magnet from the first permanent magnet so as to establish a second gap between them and so that there is magnetic interaction between the second and third permanent magnets, and at least one second coil mounted in the gap between the second and third permanent magnets to predeterminately effect the magnetic interaction between them in certain positions of the second permanent magnet relative to the third permanent magnet thereby to contribute to the production of rotational movement of the second permanent magnet member relative to the first and third permanent magnets.

12. The device for producing rotational movement defined in claim 11 wherein the switch means for applying voltage from the source across the coils includes a light source and light sensor one mounted on the support structure and the other on the rotating means to produce a switching action to apply and remove voltage from across the coils in predetermined positions of the second permanent magnet relative to the first and third permanent magnets.

13. Means for producing rotary motion using magnetic energy from permanent magnets comprising:

a fixed permanent magnet having opposite surfaces with north and south poles respectively adjacent thereto,

a shaft having an axis and means journaling the shaft for rotation in a position extending normal to the opposite surfaces of the fixed permanent magnet,

a movable permanent magnet and means mounting the movable permanent magnet on the shaft for rotation therewith, the movable permanent magnet occupying an curved portion of said mounting means less than the entire circumference of said mounting means and having opposite surfaces with associated north and south poles respectively, one pole of said movable permanent magnet being positioned to move in close enough proximity to one of the opposite surfaces of the fixed permanent magnet to produce magnetic interaction between them,

at least one coil mounted in the space between the fixed permanent magnet and the movable permanent magnet, energising of the coil effecting the magnetic interaction between the fixed and the movable permanent magnets when positioned between them, and

means connecting the coil to a source of energising potential in selected positions of the movable permanent magnet relative to the fixed permanent magnet.

14. The device for producing rotary motion of claim 13 wherein a plurality of coils are mounted in a coplanar relationship in the space between the fixed permanent magnet and the movable permanent magnet, the means connecting the coils to a source of energising potential including means for energising the respective coils in a predetermined sequence.

15. The device for producing rotary motion of claim 13 including a second movable permanent magnet mounted on the means mounting the movable permanent magnet for movement therewith, said second movable permanent magnet being spaced circumferentially from the aforesaid movable permanent magnet.

16. The device for producing rotary motion of claim 13 wherein a second fixed permanent magnet has opposite surfaces with north and south poles respectively adjacent thereto and is mounted on the opposite side of the movable permanent magnet from the aforesaid fixed permanent magnet and at least one coil mounted in the space between the second fixed permanent magnet, and the movable permanent magnet.

17. A device for producing rotary motion defined in claim 13 wherein the means connecting the coil to a source of energising potential includes a fixed light source and a fixed light sensitive member mounted in spaced relationship and means on the mounting means for the movable permanent magnet for predeterminately controlling communication between the light source and the light sensitive member during rotation of the movable permanent magnet.

18. A magnetic motor-like device comprising:

a fixed support structure having a permanent magnet member mounted thereon, said member having opposite side faces with a north magnetic pole adjacent one side face and a south magnetic pole adjacent the opposite side face,

a plurality of coils mounted adjacent to and arranged about one of the opposite side faces,

an orifice through the permanent magnet member at a location intermediate the coils,

a shaft extending through the orifice for rotation about the axis thereof,

a member attached to the shaft for rotation therewith and spaced from the one opposite magnet side faces,

at least one magnet member attached to a segment of said rotating member for rotation therewith, each of said rotating magnetic members having a magnetic pole face positioned in spaced relation to the one opposite pole side face of the fixed permanent magnet member, the plurality of coils being in the space formed by and between the fixed permanent magnet member and the at least one rotating magnet member, and

means to selectively and sequentially energise the coils as the shaft rotates to predeterminately control the magnetic interaction between the at least one magnetic member and that fixed permanent magnet member.

19. The magnetic device of claim 18 wherein there is an odd number of coils mounted in the space between the permanent magnet member and the at least one rotating magnetic member.

20. The magnetic device of claim 18 wherein the at least one magnetic member attached to the rotating member for rotation therewith includes two circumferentially spaced rotating magnet portions.

21. A device for producing rotary motion comprising:

a support structure having a wall member, a shaft and means journaling the shaft for rotation in the wall member about its axis,

a permanent magnet member mounted on the wall member extending about at least a portion of the shaft, said permanent magnet member having one pole adjacent to the wall member and an opposite pole spaced therefrom,

a member mounted on the shaft having at least two magnetic members oriented to produce magnetic interaction with the permanent magnet member,

a plurality of coils mounted in coplanar relation extending into the space formed by and between the permanent magnet member and the at least two magnetic members and

means to sequentially apply a voltage across the respective coils to vary the magnetic interaction between the permanent magnet member mounted on the wall member and selected ones of the at least two magnetic members.

22. A device for producing rotary motion using magnetic energy from permanent magnets comprising

a fixed permanent magnet having opposite surfaces with north and south poles respectively adjacent thereto,

a shaft and means for journaling the shaft for rotation extending normal to the opposite surfaces of the fixed permanent magnet,

at least two rotatable permanent magnets and means mounting them for rotation with the shaft, the rotatable permanent magnets having opposite surfaces with associated north and south poles respectively, one pole of each rotatable permanent magnet being positioned close enough to one of the opposite surfaces of the fixed permanent magnet to produce magnetic interaction therebetween,

a plurality of spaced coils arranged to be coplanar and positioned in the space formed by and between the fixed permanent magnet and the rotatable permanent magnets, and

means to apply a voltage across respective ones of the coils in a sequence so as to predeterminately affect the interaction between the fixed permanent magnet and the rotatable permanent magnets in a manner to produce rotation of the at least two permanent magnets.

23. A device for producing rotary motion using magnetic energy from permanent magnets comprising:

a fixed annular permanent magnet having a flat surface on one side and an opposite surface of helical shape extending therearound from a location of minimum thickness to a location of maximum thickness approximately adjacent thereto, the annular permanent magnet having one of its poles adjacent to the flat surface and its opposite pole adjacent to the helical opposite surface,

a shaft and means for journaling the shaft for rotation extending substantially normal to the flat surface of the fixed permanent magnet,

a permanent magnet and means mounting it on the shaft for rotation therewith, said permanent magnet having opposite pole faces and being positioned so that there is magnetic interaction between said permanent magnet and the fixed annular permanent magnet,

at least one air coil positioned in the space between the fixed and rotatable permanent magnets, and

means to apply a voltage across the air coil when the rotatable permanent magnet is adjacent to the thickest portion of the fixed permanent magnet to change the magnetic interaction therebetween, said last name means including a source of voltage and switch means in series with the source for controlling the application of voltage across the air coil.

24. The device for producing rotary motion of claim 23 wherein a plurality of rotatable permanent magnets are mounted at circumferentially spaced locations about the shaft for magnetic interaction with the fixed annular permanent magnet, the switch means controlling the application of voltage from the source to the air coil when one of the rotatable permanent magnets is positioned adjacent to the thickest portion of the fixed annular permanent magnet.

25. The means for producing rotary motion of claim 23 wherein the switch means includes cooperative optical means having a first portion associated with the fixed annular permanent magnet and a second portion associated with the rotatable annular permanent magnet.

The Power Plant of Claude Mead and William Holmes

US Patent 4,229,661   21st October 1980   Inventors: Claude Mead and William Holmes

POWER PLANT FOR CAMPING TRAILER

Note: This patent is not a free-energy patent, but it does provide a suggestion for an integrated and practical system for providing power for people living in a caravan which is frequently off-grid but which occasionally is positioned where electrical mains power is available. It describes a practical system for storing wind energy for high-power electrical power supply, and so is of interest.

ABSTRACT

A power plant for mobile homes, camping trailers, and the like, capable of capturing low-powered wind energy, storing the energy in the form of compressed air, and delivering it on demand in the form of household electrical current. The device comprises a wind turbine which drives an air compressor which feeds a storage tank. When required, the compressed air drives a turbine coupled to an electrical generator. Various pressure regulators are used to control the speed of the generator. The wind turbine is also coupled to an alternator which keeps a bank of batteries charged. A DC motor running on the batteries, is used when necessary, to boost the drive of the air compressor during periods of heavy or long power drain. Provision is made for rapidly recharging the power plant from either a supply of compressed air or from an AC power source.

US Patent References:

2230526	Wind power plant	February, 1941	Claytor	290/44
2539862	Air-driven turbine power plant	January, 1951	Rushing	290/44
3315085	Auxiliary power supply for aircraft	April, 1967	Mileti et al.	290/55
3546474	Electrohydraulic Transmission of Power	December, 1979	DeCourcy et al.	290/1
4150300	Electrical and thermal system for buildings	April, 1979	VanWinkle	290/55

BACKGROUND OF THE INVENTION

The current shortage of fossil fuel and public concern for the quality of the environment have triggered a hurried search for alternate forms of energy. The capture and use of solar energy, and its derivative, wind power, is the object of many new inventions. Due to the inefficiency of the collector device and storage media, use of these forms of energy has been limited to low-power stationery applications. Yet wind power should be adequate for any application requiring very low power or a short, occasional low to medium power supply of energy. These circumstances are encountered, for instance, in a refrigerated railroad car where occasional bursts of power are required to run the refrigerating system in order to maintain a low temperature inside the car. Similar circumstances are found in some mobile housing units such as a camping trailer. There, again, a supply of household current might be necessary for a short time between long periods of travel. In such instances, a system can be devised for accumulating energy generated by a wind turbine powered by the wind or by the air draft created by the motion of the vehicle. It is further desirable that the power system be capable of being replenished from non-polluting energy sources which can be encountered along the travel route.

SUMMARY OF THE INVENTION

It is accordingly an object of the instant invention to provide a novel power plant for mobile homes, and the like, which captures wind energy, stores it in the form of compressed air, and delivers it on demand in the form of household electrical current.

Another object of this invention is to provide a power plant which does not discharge polluting effluents into the atmosphere.

Still another object of the invention is to provide a power plant which can be recharged by capturing the effect of the wind, or the effect of the air stream created by the movement of the vehicle.

A further object of the invention is to provide a power plant which can be recharged from a household current electrical outlet.

It is also an object of this invention to provide a power plant which can be replenished from a source of compressed air such as those found in automotive service stations.

An additional object of the invention is to provide a power plant which is responsive to a very low level of wind energy for a short period of time.

These and other objects are achieved by a power plant which comprises a wind turbine driving an air compressor. The air supply of the compressor is stored in the tank and used on demand to activate a turbine. The turbine, in turn, is coupled to a generator which creates household current. The wind turbine is also coupled to generators which charge a series of electrical batteries. On occasions when the AC power drain requires it, a motor running on the batteries is used to boost the output of the air compressor. Provision is made for driving the compressor from an outside AC power source. The air tank has a separate inlet through which it can be replenished from a source of compressed air.

THE DRAWINGS

FIG. 1

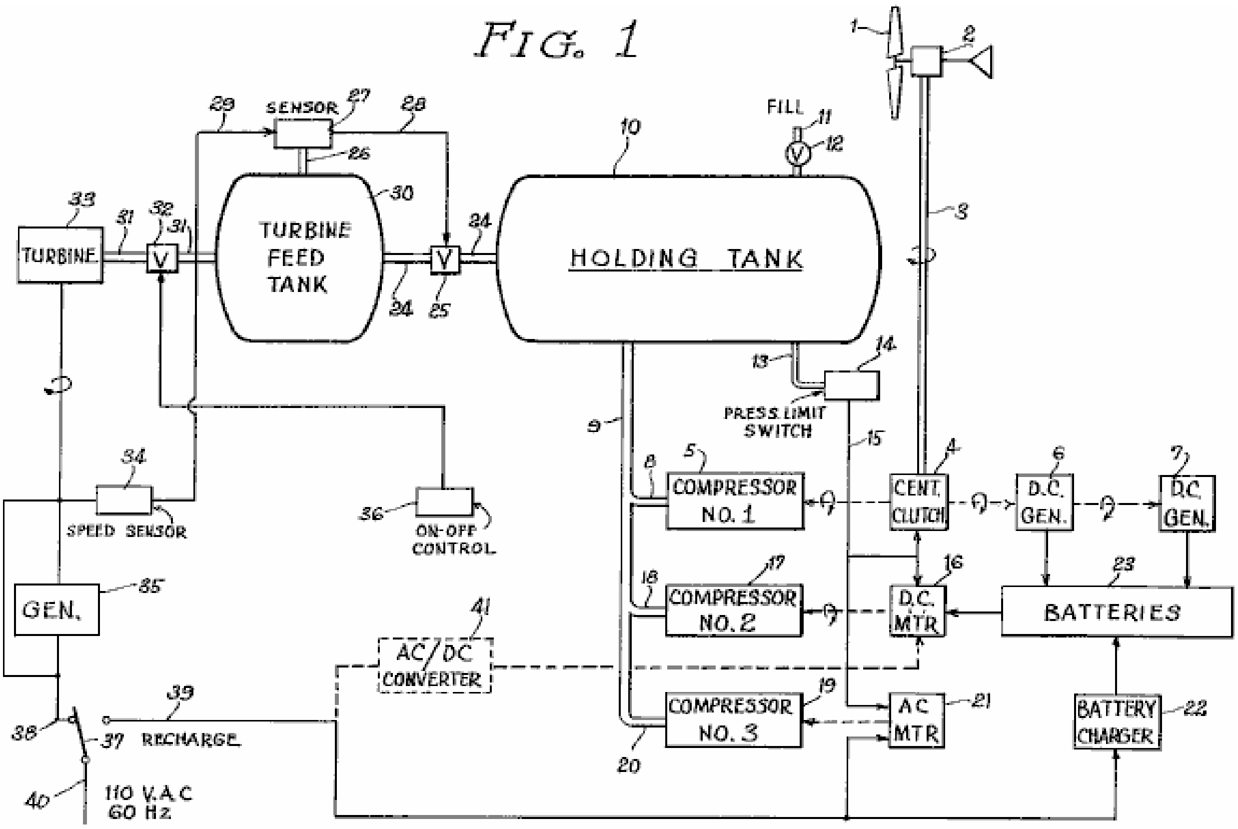

Fig.1 is the general block diagram of the entire power plant;

FIG. 2

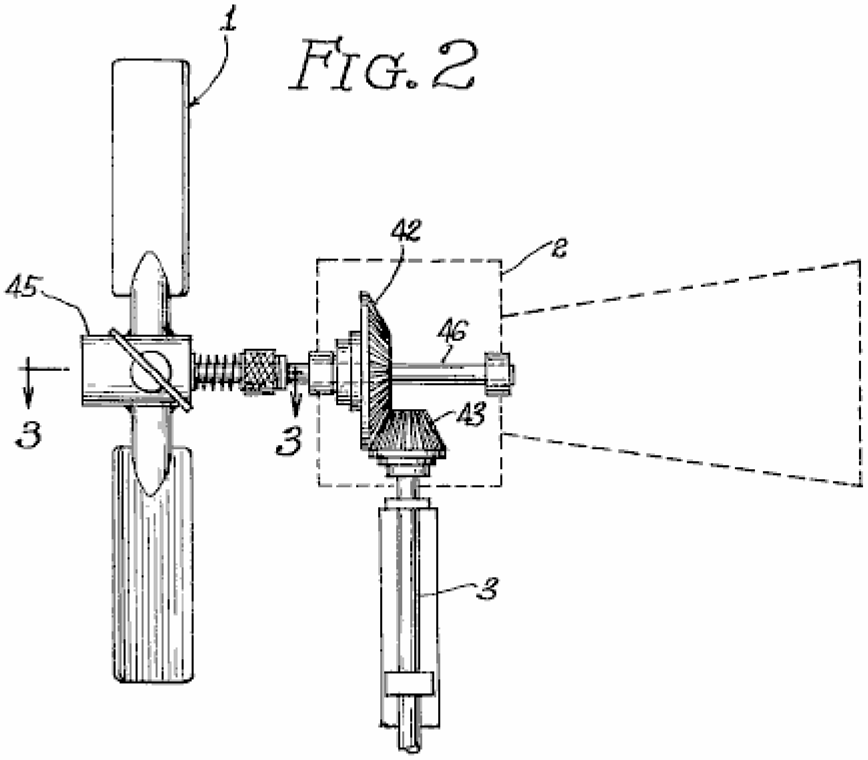

Fig.2 is a front elevation of the wind turbine and of its mechanical coupling to the drive shaft;

FIG. 3

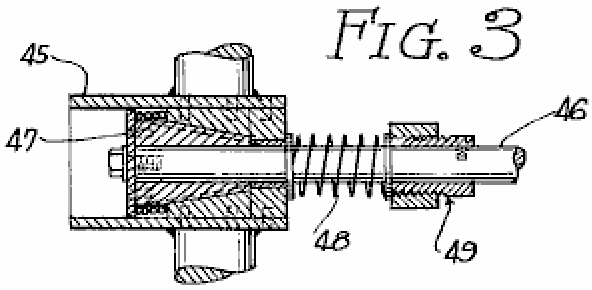

Fig.3 is a cross-sectional view taken along line 3--3 of Fig.2 showing the propeller linkage mechanism in the engaged position;

FIG. 4

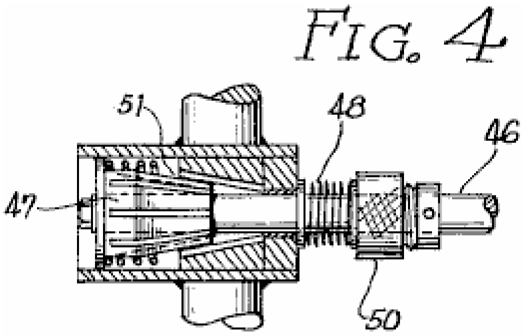

Fig.4 is a view similar to the one illustrated in Fig.3 but showing the propeller linkage mechanism in the disengaged position.

DESCRIPTION OF THE PREFERRED EMBODIMENT OF THE INVENTION

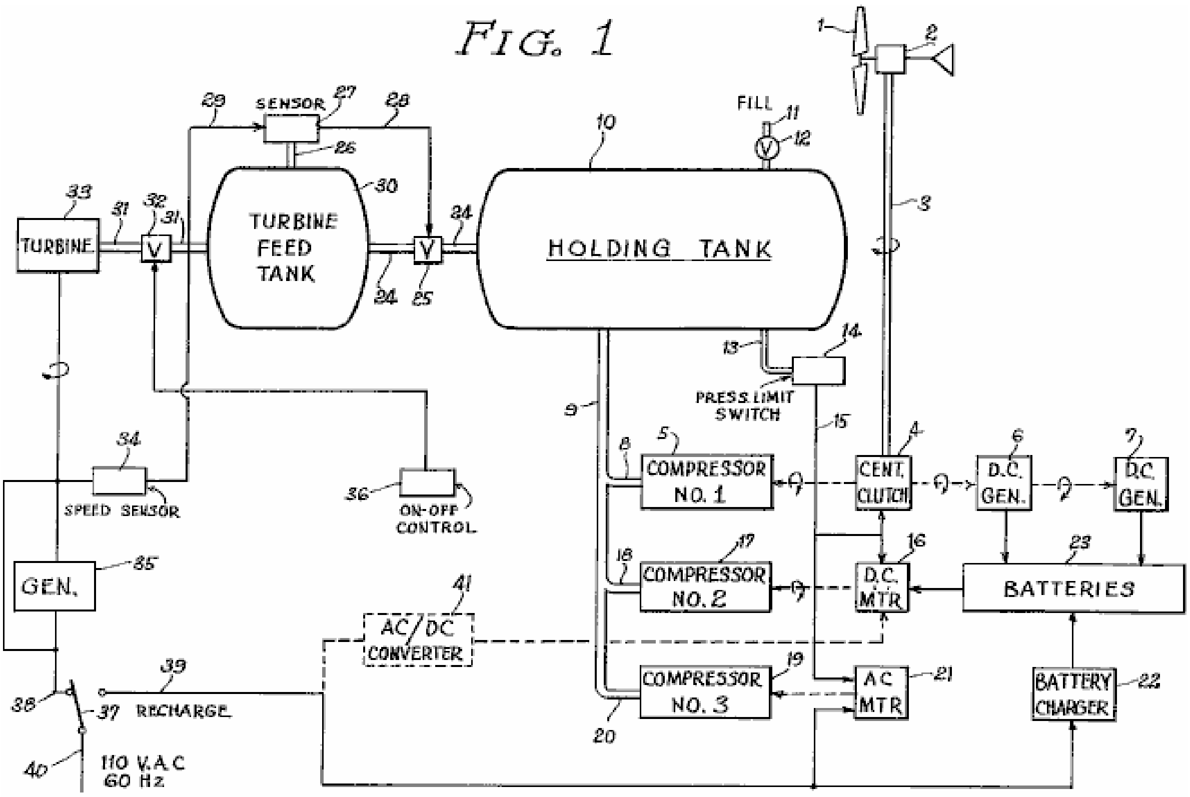
FIG. 1

Referring now to **Fig.1**, there is shown a diagramatic representation of the preferred embodiment of the invention. A wind turbine comprising a propeller **1** and an orthogonal coupling assembly **2** drives a shaft **3** connected to a centrifugal clutch **4**. This type of clutch is designed to engage itself when the speed of the drive shaft **3** reaches a certain minimum preset limit. The plate of the clutch is first connected to a compressor **5** and second to two DC generators **6** and **7**. Block **5** represents a adiabatic compressor requiring an input drive of approximately one-fourth horsepower.

The output of the compressors **5** is protected by a check valve and leads into a pipe **8** connected to a tank inlet pipe **9**. The inlet pipe **9** feeds into a holding tank **10** capable of holding sixty gallons of compressed air under a maximum pressure of 200 pounds per square inch. The DC generators **6** and **7** supply a series of electrical batteries **23**. The batteries feed a DC motor **16**. The DC motor is in turn connected to a second compressor **17**. The second compressor **17** is similar to the first compressor **5** and is connected through to pipe **18** to the tank inlet pipe **9**. A third compressor **19** similar to the first and second compressors is also connected to the tank inlet pipe **9** through pipe **20**. The third compressor **19** is powered by an AC motor **21**.

A pressure limit switch assembly **14** senses the pressure in the holding tank through a pipe **13**. A high pressure switch within the assembly **14** is activated when the holding tank reaches the maximum safely allowable pressure. This switch through line **15** causes the disengagement of the clutch **4** and turns off DC motor **16** and AC motor **21**. A second switch within the assembly **14** is activated when the holding pressure falls below a preset limit.

This second switch through line **15** turns on the DC motor **16**. It can now be seen that when the tank pressure is below the lowest limit, both the first and second compressors **15**, **17** will be activated. When the tank pressure goes above the lowest preset limit, only the first compressor **5** will be activated. If the holding tank pressure reaches the maximum tolerable limit all the compressors will be deactivated. The engagement speed of the centrifugal clutch **4** is set to a level corresponding to the minimum power necessary to drive the first compressor **5** and the DC generators **6** and **7**. If the speed of the wind falls below that level, the shaft **3** will be free-running.

The holding tank **10** has a separate inlet **11** protected by a check valve **12**. The holding tank is connected to a turbine feed tank **30** through pipe **24** controlled by valve **25**. The turbine feed tank **30** is connected to the inlet of a turbine **33** through pipe **31** controlled by valve **32**. The turbine **33** is powered by the expansion of the compressed air supplied by the turbine feed tank **30**. The turbine **33** is similar to the compressed air motors used in certain impactors and drills. The turbine drives an AC generator **35** designed to supply approximately five kilowatts of household current at 60 Hz and 110 volts. The turbine is turned on by means of the valve **32** controlled by an/off switch **36**. The speed of the turbine **33** is determined by the pressure of the air accumulated in the turbine tank **30**. The pressure is monitored by sensor **27** connected to the turbine feed tank **30** by pipe **26**. Sensor **27** contains a set of high and low limits. When the turbine feed tank pressure falls below the low limit, valve **25** is opened through control line **28**. When the pressure in the turbine feed tank **30** reaches the high limit, the valve **25** is closed. The high and low limit of sensors **27** are not fixed but subject to minor variations in response to the speed of the turbine **33**.

The speed of the turbine **33** and of the generator **35** is monitored by speed sensor **34**. The output of the speed sensor **34** is inversely proportional to the speed of the turbine **33**. The speed sensor signal **29** is fed to sensor **27**. If the output frequency of the generator **35** deviates from the required 60 Hz, the high and low limits of the sensor **27** are either increased or decreased. If the speed of the generator is slowed down by an increase in the load current, the high and low limits of sensor **27** are raised in order to raise the pressure in turbine feed tank **30**. The turbine **33** will respond to the pressure change by increasing its rotational speed. The output of the generator **35** is made available for use through lines **38** and **40** controlled by a switch **37**.

The pressure in the holding tank **10** may be boosted from two external sources. First, compressed air may be introduced through inlet **11**. Second, the AC motor **21** may be connected to an external source of electrical energy through lines **39** and **40** controlled by switch **37**. The external electrical source may also be applied to a battery charger **22** which supplies the series of batteries **23**. In an alternate version of the preferred embodiment, it is suggested that an AC/DC converter **41** be used to drive the DC motor **16** from the external electrical supply. In such a case, the AC motor **23** and the third compressor **19** are not necessary.

The power plant just described is primarily designed to be installed on board a camping trailer. This power plant will accumulate wind ("aeolian") energy during the periods when the wind is blowing or the trailer is in motion. The energy is stored in two forms. First, it is stored in the form of compressed air in the holding tank **10**. Second, it is stored in the form of DC current in the series of batteries **23**. Both storage media are ecologically clean. Furthermore, the electrical system can boost the power of the compressed air system during periods of heavy power drain or long use. For added convenience, the system can be refuelled from an external source of electrical energy such as a household outlet or from an external source of compressed air such as those found in service stations for use by vehicle drivers. It should be noted also that this power plant is versatile in that it can be driven not only from the movement of fluids such as air or water, but also from the movement of the vehicle. In the later case, the shaft **3** would be coupled directly to the wheel of the vehicle.

FIG. 2

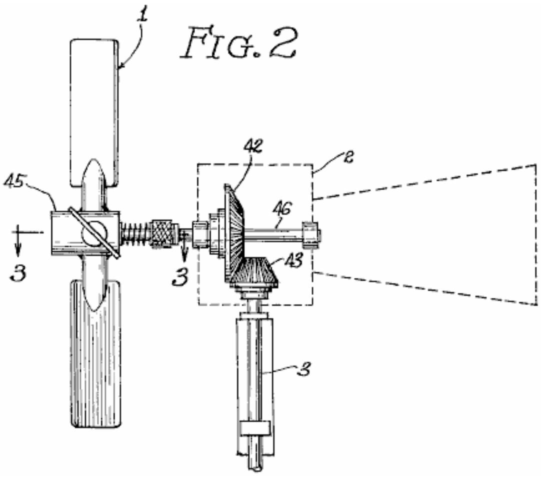

FIG. 3

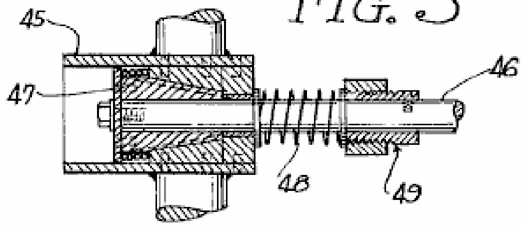

FIG. 4

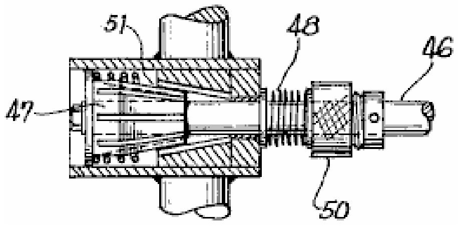

Referring now to **Figs. 2** through **4**, there is shown the details of the propeller **1** and coupling box **2**. The propeller is noticeable by the fact that it is protected against bursts of wind which could damage the equipment. The hub **45** of propeller **1** is mounted on a shaft **46** by means of a conical spindle **46**. The hub has a central cavity **51** matching the outline of the spindle **47**. The hub **45** is held against the spindle by means of a coil spring **48** resting against an adjustable stop **49**. An excess of pressure of the wind against the propeller **1** will cause the hub **45** to be pulled back against the spring **48**, disengaging it from the spindle **47**. At that point the propeller 1 will rotate freely without driving the shaft **46**. The pressure of the coil spring **48** may be adjusted by turning the ring **50** around the threaded base of the stop **49**.

The various mechanical and electro-mechanical components of the power plant such as the centrifugal clutch, compressors, generators, turbines, valves and pressure-activated switches are well known to those skilled in the art.

The speed sensor **34** may be implemented with an electronic integrator whose output signal **29** amplitude is proportional to the frequency of AC generator **35**. The signal **29** is then used to modulate the sensitivity of sensor switches **27**. This technique is also well known to those skilled in the electro-mechanical arts.

Modifications, other than those suggested, can be made to the embodiment of the invention just described without departing from the spirit of the invention and the scope of the appended claims.

CLAIMS

1. A power plant which comprises:

(a) first rotating means responsive to movement of a fluid;
(b) first fluid compressor driven by the first rotating means;
(c) first means for coupling the first rotating means to the first fluid compressor;
(d) first electrical energy generator driven by the first rotating means;
(e) second means for coupling the first rotating means to the first generator;
(f) means for accumulating electrical energy generated by the first generator;
(g) second rotating means responsive to The accumulated energy;
(h) second fluid compressor driven by the second rotating means;
(i) means for storing compressed fluid;
(j) fluid conduit means for connecting the outputs of the first and second fluid compressors to the means for storing;
(k) means responsive to fluid pressure within the means for storing for controlling the operation of the first and second fluid compressors;
(l) third rotating means responsive to the expansion of compressed fluid;
(m) means for connecting the means for storing to the third rotating means;
(n) second electrical energy generator driven by third rotating means; and
(o) means for coupling the third rotating means to the second electrical energy generator.

2. The power plant claimed in claim 1 wherein the means for controlling the operation of the first and second fluid compressors comprise:

(a) first switch means responsive to high pressure for turning off the second rotating means and for inhibiting the first fluid compressor; and
(b) second switch means responsive to lower pressure for turning on the second rotating means.

3. The power plant claimed in claim 2 wherein the means for storing compressed fluid comprise:

(a) a high pressure tank;
(b) a low pressure tank;
(c) first valve means responsive to fluid pressure in the low pressure tank for regulating the flow of fluid from the high pressure tank to the low pressure tank; and
(d) the means for connecting the means for storing to the third rotating means comprise fluid conduit means and second valve means for controlling the flow of fluid.

4. The power plant claimed in claim 3 wherein The means for storing further comprise means responsive to the rotating speed of the third rotating means for controlling the first valve means.

5. The power plant claimed in claim 4 which further comprises:

(a) fourth rotating means responsive to electrical energy;
(b) third fluid compressor driven by the fourth rotating means;
(c) means for coupling the fourth rotating means to the third fluid compressor;
(d) means for connecting the third fluid compressor to the means for storing; and
(e) means for connecting the fourth rotating means to an external electrical energy source.

6. The power plant claimed in claim 4 wherein The means for accumulating comprise at least one electrical storage battery;

a battery charger connected to The battery; and
means for connecting The battery to an external electrical power source.

7. The power plant claimed in claim 1 wherein The first rotating means comprise: Lp1

(a) a rotating shaft;
(b) a conical spindle at one end of the shaft;
(c) a propeller having in its hub a conical hole engaging The spindle;
(d) means for resiliently holding the propeller engaged around The spindle; and
(e) means for adjusting the pressure of the means for holding against the propeller.

8. The power plant claimed in claim 4 wherein the first means for coupling comprise a centrifugal clutch.

9. The power plant claimed in claim 7 installed into a vehicle.

10. The power plant claimed in claim 9 wherein The high pressure tank comprises a means for connecting The tank to an outside source of compressed air;

A means for accumulating electrical energy comprises at least one electrical storage battery;
A second rotating means comprise a DC motor;
A third rotating means comprise a turbine powered by expansion of compressed air;
A second electrical energy generator comprise a generator of household alternating current; and
A means for distributing the household current to the vehicle electrical appliances.

The Motionless Generator of Richard Willis

This patent application covers a device which is claimed to have a substantially greater output power than the input power required to run it and it has no moving parts.

Patent application WO2009065210 (A1) 28th May 2009 Inventor: Richard Willis

ELECTRICAL GENERATOR

ABSTRACT

An electrical generator comprising an induction coil with a first magnet positioned adjacent to the first end of the induction coil so as to be in the electromagnetic influence of the induction coil when it is energised, and for creating a magnetic field around at least the first end of the induction coil. There is also a second magnet positioned near the second end of the induction coil so as to be in the electromagnetic field of the induction coil when the induction coil is energised, and for creating a magnetic field around at least the second end of the induction coil. A power input circuit powers the induction coil. A timer is placed in the power input circuit in order to create electrical pulses and controlling their timing. A power output circuit receives power from the induction coil.

FIELD OF THE INVENTION

The present invention relates to an electrical power generator, and more particularly to an "over-unity" electrical power generator.

BACKGROUND OF THE INVENTION

Electricity is conventionally generated in a number of ways, including fossil fuel powered electromechanical generators, coal powered electromechanical generators, water-flow powered electromechanical generators, nuclear reactor type generators, and so on. In each case, there are a number of disadvantages associated with these methods, especially inefficiency and also the scarcity of a power source.

Recently, magnetic generators have been developed which produce electrical power from the magnetic field of the Earth. Basically, an input magnetic field is quickly switched on and off, or alternatively more than one input magnetic field is selectively switched on and off, on an alternating basis, to influence a larger magnetic field in an electromagnetic apparatus that is selectively connected to an electrical power output circuit. A resulting electrical power is produced in the power output circuit.

There are even magnetic generator circuits which produce more electrical power than that which is applied to the circuit. While this seems to contradict the laws of physics, it docs not, otherwise, such magnetic generator circuits would not work. These magnetic generator circuits work, on the basic principle that the space-time continuum is very energetic, including energy fields such as the Earth's magnetic field.

It should be understood that electric fields and magnetic fields do not have an independent existence. A purely electromagnetic field in one coordinate system can appear as a mixture of electric and magnetic fields in another coordinate system. In other words, a magnetic field can at least partially turn into an electric field, or vice versa.

It is also well known that a system which is far from equilibrium in it's energy exchange with it's environment can steadily and freely receive environmental energy and dissipate it in external loads. Such a system, can have a Coefficient of Performance ("COP") greater than 1. For a COP greater than 1, an electrical power system must take some, or all of its input energy, from it's active external environment. In other words, the system must be open to receive and convert energy from it's external environment, as opposed to merely converting energy from one form to another.

The US Patent 6,362,718 issued on 26th March 2002 to Patrick et at., discloses an electromagnetic generator without moving parts. This electromagnetic generator includes a permanent magnet mounted within a rectangular ring-shaped magnetic core having a magnetic path to one side of the permanent magnet and a second magnetic path to the other side of the permanent magnet. A first input coil and a first output coil extend around portions of the first magnetic path, with the first input coil being at least partially positioned between the permanent magnet and the first output coil. A second input coil and a second output coil extend around portions of the second magnetic path, with the second input coil being at least partially positioned between the permanent magnet and the second output coil. The input coils are alternatively pulsed by a switching and control circuit and provide induced current pulses in the output coils. Driving electrical current through each of the input coils reduces a level of flux from the permanent magnet within the magnet path around which the input coil extends.

In an alternative embodiment of the Patrick et al electromagnetic generator, the magnetic core includes circular spaced-apart plates, with posts and permanent magnets extending in an alternating fashion between the plates. An output coil extends around each of these posts. Input coils extending around portions of the plates are pulsed to cause the induction of current within the output coils.

The apparent problems with the electric magnetic generator is disclosed in US Patent 6,362,718 seem to be twofold. First, it is more expensive to produce than necessary as it has four coils. Secondly, while it apparently achieves a Coefficient of Performance of more than 3.0, a much greater Coefficient of Performance is readily achievable. This is believed to be due to the specific physical configuration of the magnetic paths.

It is an object of the present invention to provide an electrical generator having a Coefficient of Performance significantly greater than 1.

SUMMARY OF THE INVENTION

In accordance with one aspect of the present invention there is disclosed a novel electrical generator comprising an induction coil. There is a first magnet positioned beside the first end of the induction coil so as to be in the electro-magnetic field of the induction coil when the induction coil is energised, and for creating a magnetic field around at least the first end of the induction coil. There is also a second magnet positioned near the second end of the induction coil so as to be in the electro-magnetic field of the induction coil when the induction coil is energised, and for creating a magnetic field around at least the second end of the induction coil. A power input circuit provides power to the induction coil. A timing device is placed in the input power circuit in order to create electrical pulses and for controlling the timing of those electrical pulses being passed to the induction coil. A power output circuit receives power from the induction coil.

Other advantages, features and characteristics of the present invention, as well as methods of operation and functions of the related elements of the structure, and the combination of parts and economies of manufacture, will become more apparent upon consideration of the following detailed description and the appended claims with reference to the accompanying drawings which are described here:

BRIEF DESCRIPTION OF THE DRAWINGS

The novel features which are believed to be characteristic of the electrical generator according to the present invention, as to its structure, organisation, use and method of operation, together with it's further objectives and advantages, will be better understood from the following drawings in which a preferred embodiment of the invention will now be illustrated by way of example. It is expressly understood, however, that the drawings are for the purpose of illustration and description only, and are not intended as a definition of the limits of the invention. In the accompanying drawings:

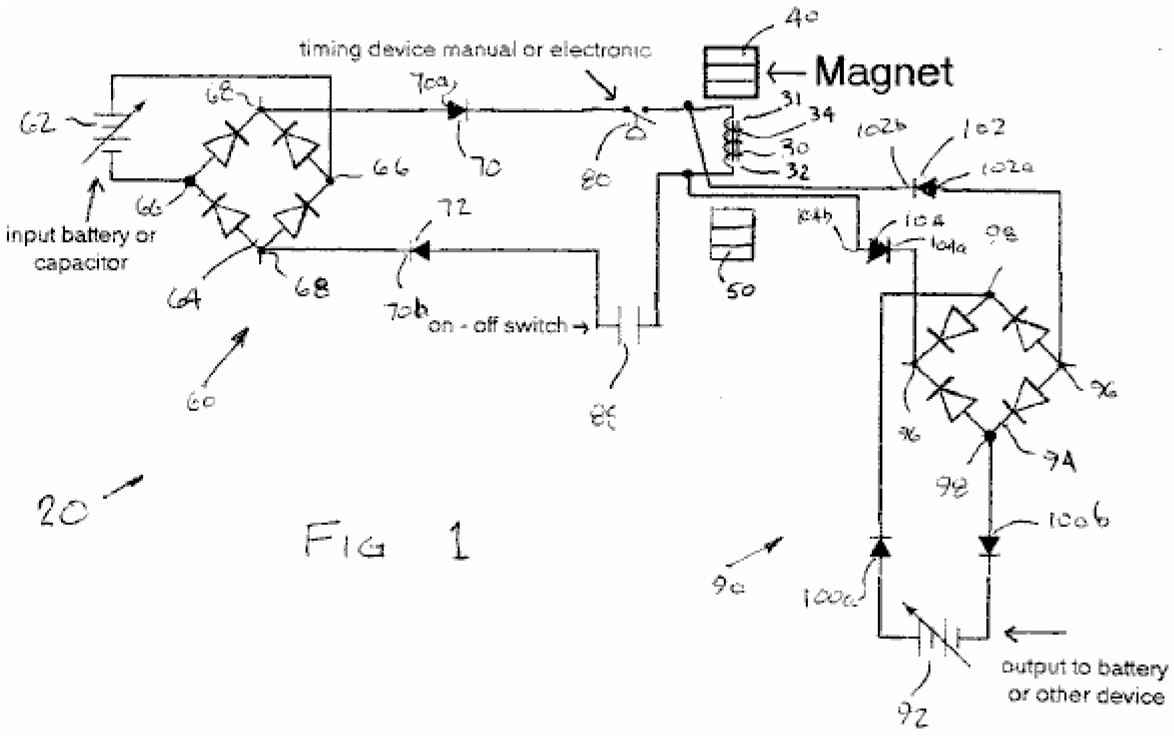

Fig.1 is an electrical schematic of the first preferred embodiment of the electrical generator.

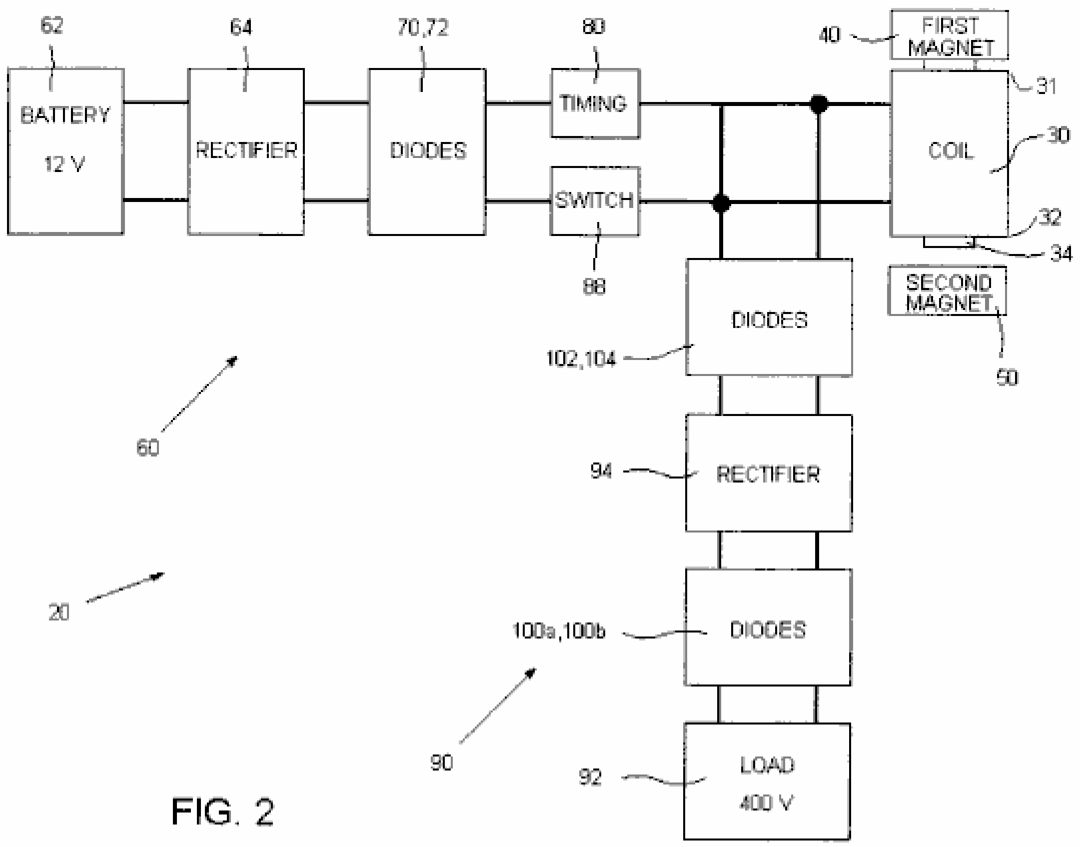

Fig.2 is a block diagram schematic of the first preferred embodiment of the electrical generator of **Fig.I**.

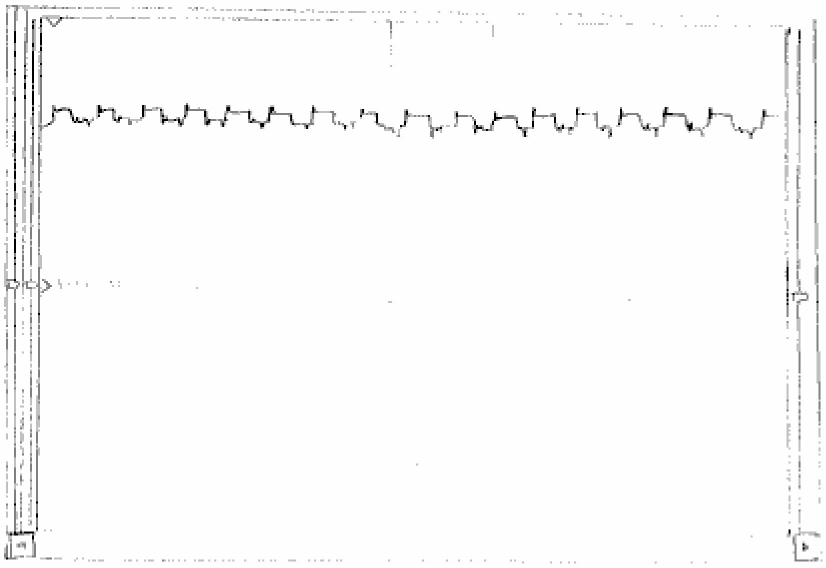

FIG. 3

Fig.3 is an oscilloscope waveform taken at the input power circuit after the timing mechanism.

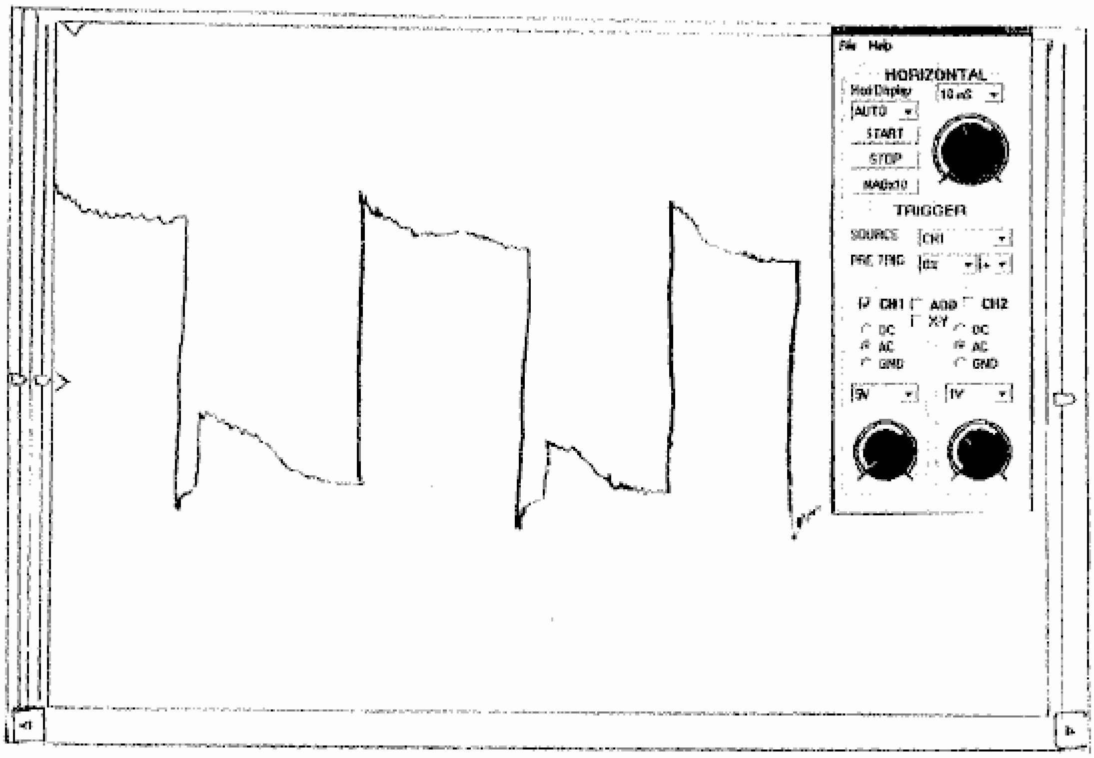

Hori Display: AUTO, 10 mS

SOURCE: CH1

PRE TRIG: 0%, +

☑ CH1 ☐ ADD ☐ CH2

☐ X-Y

● AC (CH1), ● AC (CH2)

5V

1V

FIG. 4

Fig.4 is an oscilloscope waveform taken at the output power circuit before the first set of diodes immediately after the coil.

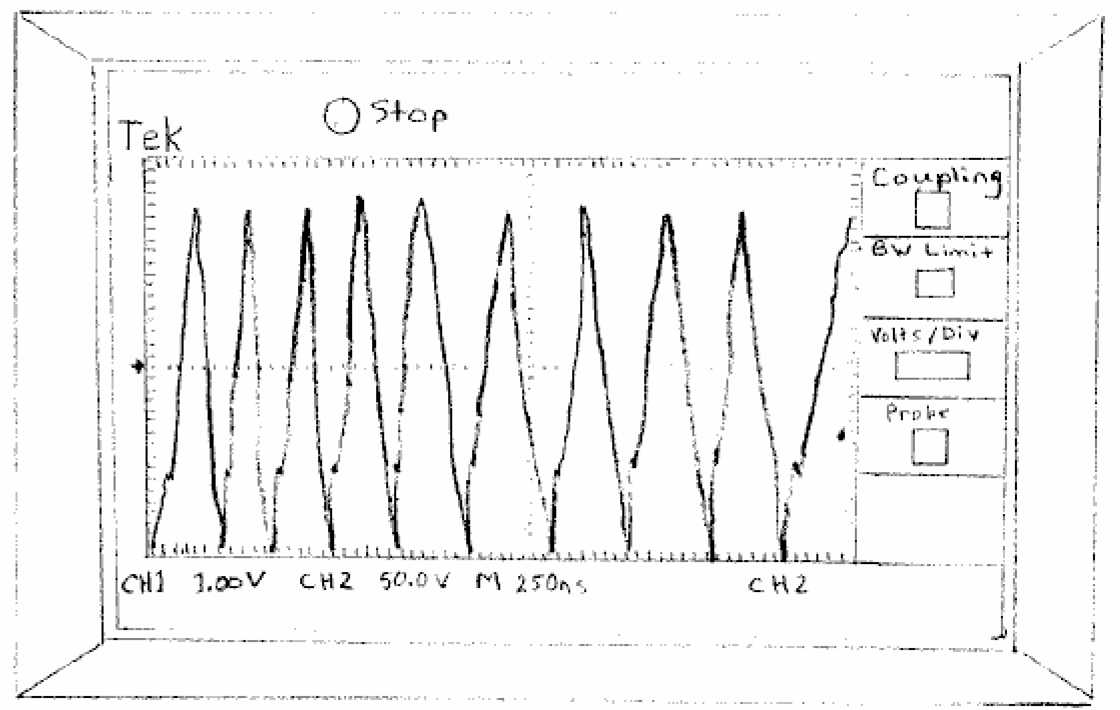

FIG. 5

Fig.5 is an oscilloscope waveform taken at the output power circuit at the load; and,

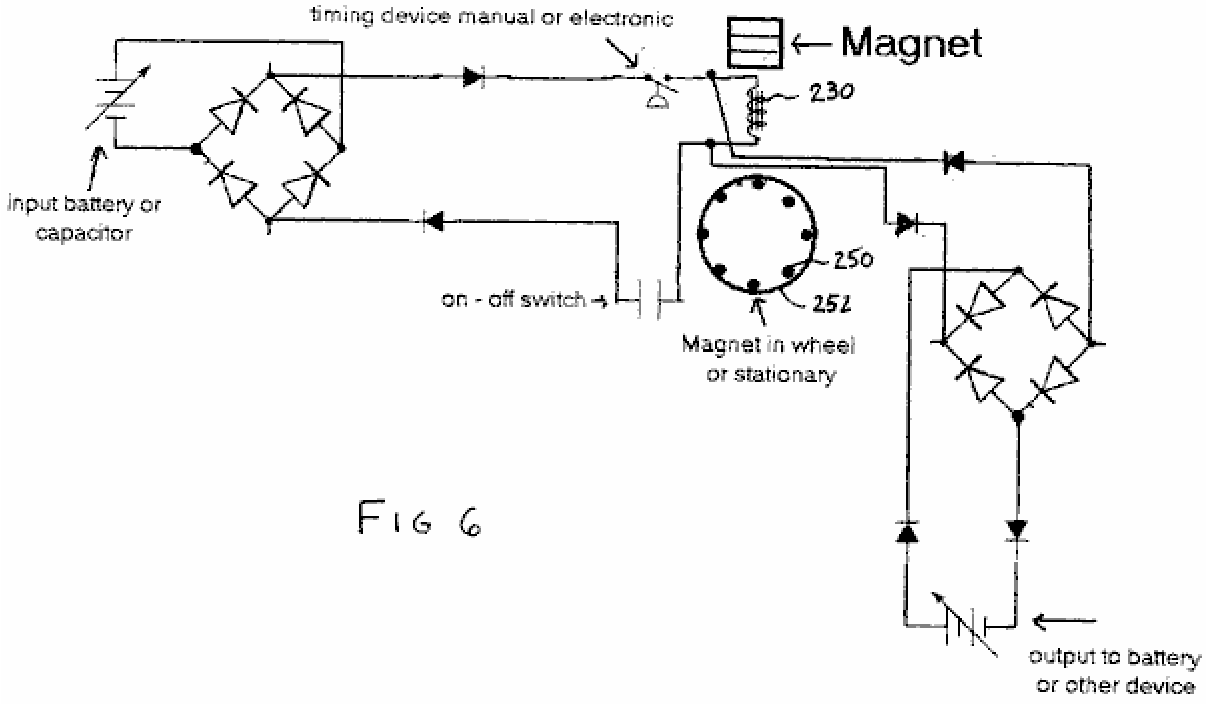

FIG 6

Fig.6 is an electrical schematic of the second preferred embodiment of the electrical generator
.

DETAILED DESCRIPTION OF THE PREFERRED EMBODIMENTS

Referring to **Fig.1** through **Fig.6** of the drawings, it will be noted that **Fig.1** through **Fig.5** illustrate a first preferred embodiment of the electrical generator of the present invention, and **Fig.6** illustrates a second preferred embodiment of the electrical generator of the present invention.

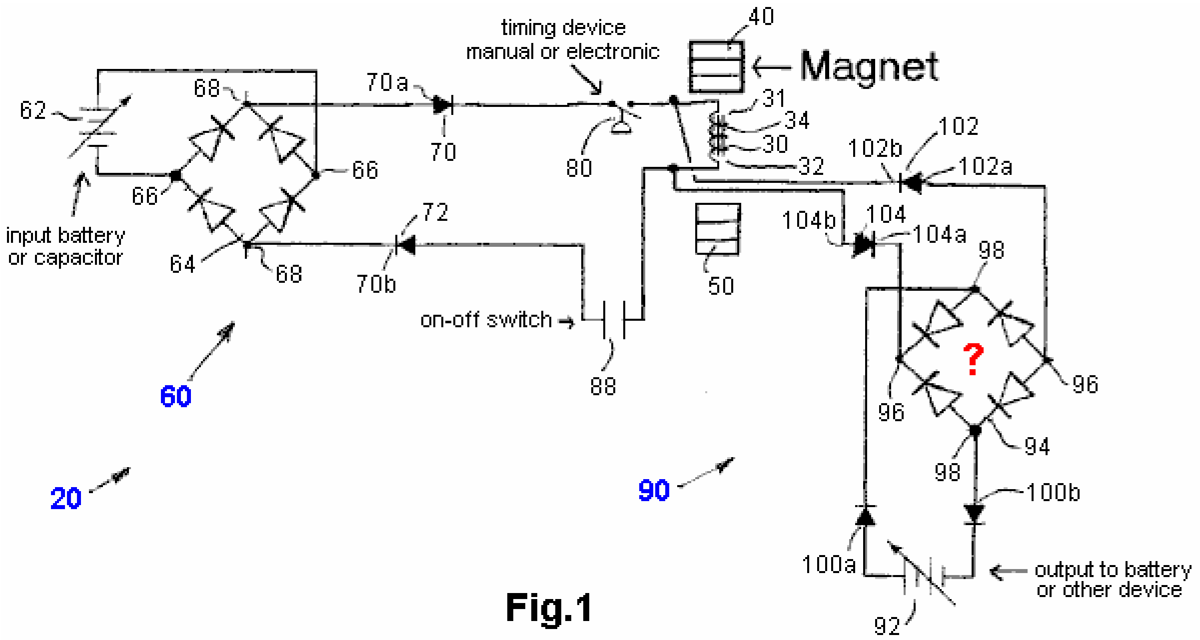

Fig.1

Reference will now be made to **Fig.1** through **Fig.5**, which show a first preferred embodiment of the electrical generator of the present invention, as indicated by general reference numeral **20**. The electrical generator **20** comprises an induction coil **30** having a first end **31** and a second end **32**. The induction coil **30** preferably includes a core **34** which is made from any suitable type of material, such as ferrite, mumetal, permalloy, cobalt, any non-permeable metal material, or any other suitable type of material. The coil **30** is wound with copper wire which can be a single size or multiple sizes depending on the size of the ferrite core **34**.

There is a first magnet **40** positioned adjacent to the induction coil **30**, preferably at the first end **31** so as to be within the electromagnetic field of the induction coil **30** when the induction coil **30** is energised. The first magnet **40** is a permanent magnet which has its North pole facing the first end **31** of the induction coil **30**. In the first preferred embodiment, the first magnet **40** is stationary with respect to the induction coil **30**, and even more preferably is in contact with, or is even secured to, the first end **31** of the induction coil **30**. The size of the coil and the copper wire used to wind the coil also depend on the size of the first magnet **40**. The first magnet **40** is there to create a magnetic field around at least the first end **31** of the first magnet **30**.

There is also a second magnet **50** positioned adjacent to the induction coil **30**, preferably at the second end **32** of the induction coil **30** but at a distance of about 1.0 cm or so from the coil core **34** but within the electromagnetic field of the induction coil **30** when the induction coil **30** is energised. The gap between the second end **32** of the induction coil **30** and the second magnet **50** can be an air gap or can be a vacuum.

The second magnet **50** is a permanent magnet which has it's North pole facing the second end **32** of the induction coil **30**. In the first preferred embodiment, the second magnet **50** is stationary with respect to the induction coil **30**. The size of the coil and the copper wire used to wind it also depends on the size of the second magnet **50**. The second magnet **50** is there in order to create a magnetic field around at least the second end **32** of the induction coil **30**.

As can be seen in **Fig.1**, the first magnet **40** is positioned so it's North pole is facing the first end **31** of the induction coil and its South pole is facing away from the first end **31** of the induction coil **30**. The first end **31** of the induction coil **30** creates a South magnetic field when it is energised. In this manner, the North pole of the first magnet **40** and the South pole of the first end **31** of the induction coil attract each other.

Similarly, but oppositely, the second magnet **50** is positioned so that it's North pole is facing the second end **32** of the induction coil and its South pole is facing away from the second end **32** of the induction coil **30**. The second end **32** of the induction coil **30** creates a North magnetic field when the induction coil **30** is energised. In this manner, the North pole of the second magnet **50** and the North pole of the second end **32** of the induction coil repel each other.

A power input circuit section, as indicated by the general reference numeral 60, is for providing power to the induction coil and is comprised of a source of electrical power **62**. In the first preferred embodiment, as illustrated, the input source of electrical power **62** comprises a DC power source, specifically a battery **62**, but additionally or alternatively may comprise a capacitor (not shown). The source of electrical power can range from less than 1.0 volt to more than 1,000,000 volts, and can range from less than 1.0 amp to more than 1 million amps. Alternatively, it is contemplated that the input source of electrical power could be an AC power source (not shown).

An input rectifier **64** which is preferably, but not necessarily, a full-wave rectifier **64**, has an input **66** electrically connected to the source of electrical power **62** and also has an output **68**. A first diode **70** is connected at its positive end **70a** to one terminal **68a** of the output **68** of the rectifier **62**. A second diode **72** is connected at its negative end **72a** to the other terminal **68b** of the output **68** of the rectifier **62**.

There is also a timing mechanism **80** in the input power circuit section **60**, which as shown, is electrically connected in series with the first diode **70**. This timing mechanism both creates electrical pulses and controls the timing of those electrical pulses which are fed to the induction coil **30**. The pulses are basically saw-tooth waveforms, as can be seen in **Fig.3**.

In the first preferred embodiment, the timing device **80** is a manual timer in the form of a set of "points" from the ignition system of a vehicle, as they can withstand high voltage and high current levels. Alternatively, it is contemplated that the timing mechanism could be an electronic timing circuit. It is also contemplated that a TGBT unit from a MIG welder could be used as the basis of the timing device **80**. It has been found that a timing device which provides a physical break in its "off" configuration works well as stray currents cannot backtrack through the circuit at that time. The timing mechanism can be of any suitable design so long as it can respond to the placement of the magnets **50** in the rotor **52** in the second preferred embodiment shown in **Fig.6**.

When the device is in use, the magnetic fields created by the first magnet 40 and the second magnet **50** in conjunction with the coil **30**, are each somewhat mushroom shaped, and oscillate back and forth, with respect to their size, in a manner corresponding to the timing of the electrical pulses from the power input circuit **60**, as controlled by the timing mechanism **80**.

The power input circuit **60** has an on/off switch **88** to allow disconnection of the power feed to the induction coil **30**. The on/off switch **88** may alternatively be located in any other suitable place in the power input circuit **60**.

A power output circuit section, indicated by the general reference numeral 90, is for receiving power from the induction coil and comprises an electrical load **92**, which, in the first preferred embodiment is a battery **92**, but may additionally or alternatively comprise a capacitor (not shown), or any other suitable electrical load device.

The power output circuit portion **90** also has an output rectifier **94** having an input **96** an output **98** electrically connected to the electrical load **92** via a pair of forward biased diodes **100a, 100b** which prevent the electrical load **92** from powering the induction coil **30**. A first diode **102** is electrically connected at its positive end **102a** to one terminal **94a** of the input of the rectifier **94** and is electrically connected at its negative end **102b** to one end of the induction coil **30**. A second diode **104** is connected at its negative end **104a** to the other terminal **94b** of the input of the rectifier **94** and is electrically connected at its positive end **104b** to the other end of the induction coil **30**. The output of the coil, taken before the diodes **102,104** is shown in **Fig.4**.

Note: It is highly likely that there is a clerical error in **Fig.1** because as it is drawn the bridge input is point **98** and not **96** as stated. If this is the case, then the two diode bridges are identical and the output section should be drawn like this:

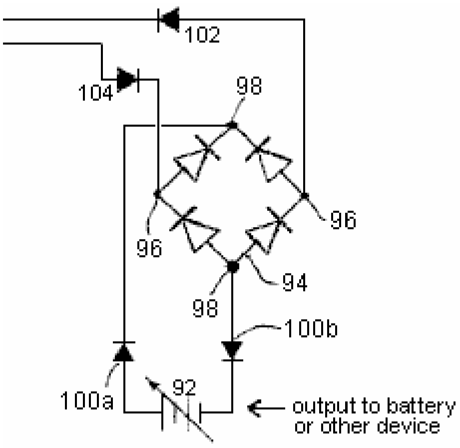

although it is by no means obvious why diodes 102 and 104 are needed as their function would appear to be provided by the output bridge diodes.

The output to the electrical load **92** of the power output circuit **90** can range from less than 1 volt to more than 1,000,000 volts, and can range from less than one amp to more than 1 million amps. As can be seen in **Fig.5**, the output to the electrical load **92** comprises generally spike-shaped pulses which have both negative and positive components.

As can be readily seen in **Fig.1** and **Fig.2**, the input power circuit **60** is electrically connected in parallel with the induction coil **30** and the output power circuit portion **90** is electrically connected in parallel with the induction coil **30**.

The various diodes and rectifiers in the electrical generator **20** can be of any suitable voltage from about 12 volts to over 1,000,000 volts, and can have slow recovery or fast recovery, as desired. Further, the various diodes and rectifiers may be configured in other suitable formats. There also may be additional capacitors added into the power output circuit adjacent to the electrical load **92** in order to increase the output power before discharge.

It has been found that setting the timing to six hundred pulses per minute (10 Hz) provides a waveform in the power output circuit portion 90 that comprises generally spike-shaped pulses with a period of about 20 nanoseconds. It is believed that the flux of the power pulses that are input into the induction coil **30** is quickly shifting the magnetic field back and forth in the induction coil **30**, which is akin to the flux of the power pulses creating its own echo. The various electromagnetic oscillations in the coil provide a much higher frequency in the power output circuit **90** than in the power input circuit portion **60**.

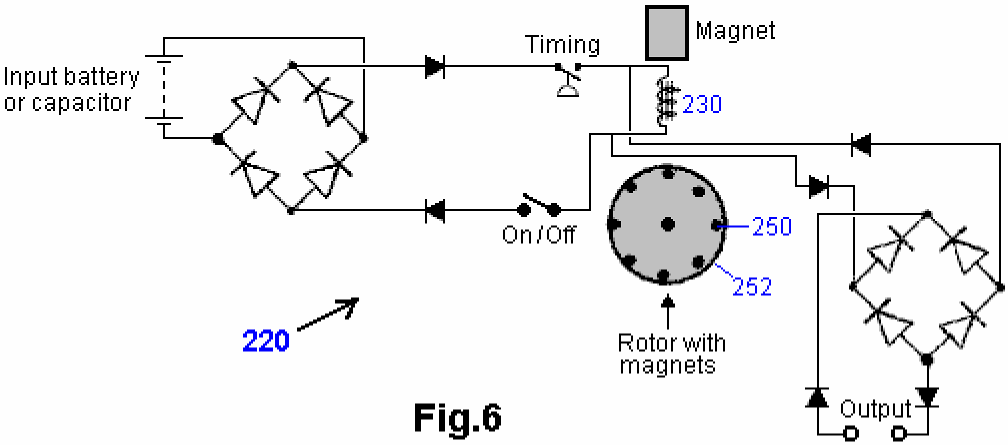

Fig.6

Reference will now be made to **Fig.6**, which shows a second preferred embodiment of the electrical generator of the present invention, as indicated by general reference numeral **220**. The second preferred embodiment electrical generator is similar to the first preferred embodiment electrical generator **20** except that the second magnet comprises several moving magnets **250**, typically eight permanent magnets **250**. These magnets are mounted on a wheel **252**, which is free to rotate. Ideally, these magnets are mounted in an identical way to each other on the rotor disc **252**. If desired, there can be any suitable number of magnets mounted in the rotor. Accordingly, at least one rotor magnet **250** will be within the electromagnetic field of the induction coil **230** when the coil is energised. The rotor magnets can be of any suitable strength and any suitable type of magnet, and they may be mounted on the rotator by any suitable means, such as a suitable adhesive, or moulded into the disc if the rotor is made of plastic. In practice, the rotor disc is driven round by the magnetic field of the induction coil when it is energised. It is also possible for the first magnet to a rotor magnet in the same manner as described for the second magnet **250**.

As can be understood from the above description and from the accompanying drawings, the present invention provides an electrical generator having a Coefficient of Performance greater than 1.0. and more specifically, an electrical generator which has a Coefficient of Performance significantly greater than 1.0. An electrical generator having a Coefficient of Performance significantly greater than 1.0 is at present, unknown in the prior art.

Other variations of the above principles will be apparent to those who are knowledgeable in the field of the invention, and such variations are considered to be within the scope of the present invention. Further, other modifications and alterations may be used in the design and manufacture of the electrical generator of the present invention without departing from the spirit and scope of the following claims:

CLAIMS

1. An electrical generator comprising:
an induction coil having a first end and a second end;
a first magnet positioned adjacent said first end of said induction coil so as to be in the electromagnetic field of said induction coil when said induction coil is energised, and for creating a magnetic field around at least said first end of said induction coil,
a second magnet positioned adjacent said second end of said induction coil so as to be in the electro-magnetic field of said induction coil when said induction coil is energized, and for creating a magnetic field around at least said second end of said induction coil;
a power input circuit portion for providing power to said induction coil;
a liming means in said power input circuit portion for creating electrical pulses and controlling the timing of said electrical pulses to said induction coil; and,
a power output circuit portion for receiving power from said induction coil.

2. The electrical generator of claim 1 , wherein said first magnet is stationary with respect to said induction coil.

3. The electrical generator of claim 2, wherein said first magnet comprises a permanent magnet.

4. The electrical generator of claim 2, wherein said induction coil includes a core.

5. The electrical generator of claim 4, wherein said first magnet is in contact with said core.

6. The electrical generator of claim 4, wherein said core is made from a material chosen from the group of ferrite, mumetal, permalloy, and cobalt.

7. The electrical generator of claim 4, wherein said core is made from a non-permeable metal material.

8. The electrical generator of claim 3, wherein said second magnet is stationary with respect to said induction coil.

9. The electrical generator of claim 8, wherein said second magnet comprises a permanent magnet.

10. The electrical generator of claim 1, wherein said second magnet comprises at least one movable magnet.

11. The electrical generator of claim 10. wherein said at least one movable magnet is mounted on a rotor.

12. The electrical generator of claim 11 , wherein said at least one movable magnet comprises a plurality of magnets mounted on said rotor.

13. The electrical generator of claim 1, wherein said power input circuit portion comprises a source of electrical power, a input rectifier having an input electrically connected to said source of electrical power and an output, a first diode connected at its positive end to one terminal of said input rectifier, a second diode connected at its negative end to the other terminal of said input rectifier.

14. The electrical generator of claim 13, wherein said timing means is electrically connected in series with said first diode.

15. The electrical generator of claim 14, wherein said power output circuit portion comprising an electrical load, an output rectifier having an output electrically connected to said electrical load via a pair of forward biased diodes and an input, a first diode connected at its negative end to one terminal of said output rectifier, a second diode connected at its positive end to the other terminal of said output rectifier.

16. The electrical generator of claim 15, wherein said input power circuit portion is electrically connected in parallel with said induction coil and said output power circuit portion is electrically connected in parallel with said induction coil.

17. The electrical generator of claim 1, wherein said input source of electrical power comprises a DC power source.

18. The electrical generator of claim 17, wherein said DC power source comprises a battery.

19. The electrical generator of claim 17, wherein said DC power source comprises a capacitor.

20. The electrical generator of claim 1 , wherein said input source of electrical power comprises an AC power source.

21. The electrical generator of claim 1 where the input rectifier is a Wheatstone bridge rectifier.

22. The electrical generator of claim 1 , wherein said timing means comprises an electronic timing circuit.

23. The electrical generator of claim 1 , wherein said timing means comprises a manual timer.

24. The electrical generator of claim 1, wherein said first magnet comprises a permanent magnet.

25. (Appears to have been omitted from the archived copy)

26. The electrical generator of claim 12, wherein said plurality of movable magnets are each mounted similarly one to another on said rotatable wheel.

27. The electrical generator of claim 1 , wherein said electrical load comprises a battery.

28. The electrical generator of claim 1 , further comprising an on/off switch electrically connected in said power input circuit portion.

The Motionless Generator of Graham Gunderson

Graham Gunderson's Solid-State Electric Generator is shown in US Patent Application 2006/0163971 A1 of 27th July 2006. The details are as follows:

Abstract

A solid-state electrical generator including at least one permanent magnet, magnetically coupled to a ferromagnetic core provided with at least one hole penetrating its volume; the hole(s) and magnet(s) being placed so that the hole(s) intercept flux from the permanent magnet(s) coupled into the ferromagnetic core. A first wire coil is wound around the ferromagnetic core for the purpose of moving the coupled permanent magnet flux within the ferromagnetic core. A second wire is routed through the hole(s) penetrating the volume of the ferromagnetic core, for the purpose of intercepting this moving magnetic flux, thereby inducing an output electromotive force. A changing voltage applied to the first wire coil causes coupled permanent magnet flux to move within the core relative to the hole(s) penetrating the core volume, thus inducing electromotive force along wire(s) passing through the hole(s) in the ferromagnetic core. The mechanical action of an electrical generator is therefore synthesised without the use of moving parts.

Background

This invention relates to a method and device for generating electrical power using solid state means.

It has long been known that moving a magnetic field across a wire will generate an electromotive force (EMF), or voltage, along the wire. When this wire is connected in a closed electrical circuit, an electric current, capable of performing work, is driven through this closed circuit by the induced electromotive force.

It has also long been known that this resulting electric current causes the closed circuit to become encircled with a secondary, induced magnetic field, whose polarity opposes the primary magnetic field which first induced the EMF. This magnetic opposition creates mutual repulsion as a moving magnet approaches such a closed circuit, and a mutual attraction as that moving magnet moves away from the closed circuit. Both these actions tend to slow or cause "drag" on the progress of the moving magnet, causing the electric generator to act as a magnetic brake, whose effect is in direct proportion to the amount of electric current produced.

Historically, gas engines, hydroelectric dams and steam-fed turbines have been used to overcome this magnetic braking action which occurs within mechanical generators. A large amount of mechanical power is required to produce a large amount of electrical power, since the magnetic braking is generally proportional to the amount of electrical power being generated.

There has long been felt the need for a generator which reduces or eliminates the well-known magnetic braking interaction, while nevertheless generating useful electric power. The need for convenient, economical and powerful sources of renewable energy remains urgent. When the magnetic fields within a generator are caused to move and interact by means other than applied mechanical force, electric power can be supplied without the necessity of consuming limited natural resources, thus with far greater economy.

Summary of the Invention

It has long been known that the source of the magnetism within a permanent magnet is a spinning electric current within ferromagnetic atoms of certain elements, persisting indefinitely in accord with well-defined quantum rules. This atomic current encircles every atom, thereby causing each atom to emit a magnetic field, as a miniature electromagnet.

This atomic current does not exist in magnets alone. It also exists in ordinary metallic iron, and in any element or metallic alloy which can be "magnetised", that is, any material which exhibits ferromagnetism. All ferromagnetic atoms and "magnetic metals" contain such quantum atomic electromagnets.

In specific ferromagnetic materials, the orientation axis of each atomic electromagnet is flexible. The orientation of magnetic flux both internal and external to the material, pivots easily. Such materials are referred to as magnetically "soft", due to this magnetic flexibility.

Permanent magnet materials are magnetically "hard". The orientation axis of each is fixed in place within a rigid crystal structure. The total magnetic field produced by these atoms cannot easily move. This constraint aligns the field of ordinary magnets permanently, hence the name "permanent".

The axis of circular current flow in one ferromagnetic atom can direct the axis of magnetism within another ferromagnetic atom, through a process known as "spin exchange". This gives a soft magnetic material, like raw iron, the useful ability to aim, focus and redirect the magnetic field emitted from a magnetically hard permanent magnet.

In the present invention, a permanent magnet's rigid field is sent into a magnetically flexible "soft" magnetic material. the permanent magnet's apparent location, observed from points within the magnetically soft material, will effectively move, vibrate, and appear to shift position when the magnetisation of the soft magnetic material is modulated by ancillary means (much like the sun, viewed while underwater, appears to move when the water is agitated). By this mechanism, the motion required for generation of electricity can be synthesised within a soft magnetic material, without requiring physical movement or an applied mechanical force.

The present invention synthesises the virtual motion of magnets and their magnetic fields, without the need for mechanical action or moving parts, to produce the electrical generator described here. The present invention describes an electrical generator where magnetic braking known as expressions of Lenz's Law, do not oppose the means by which the magnetic field energy is caused to move. The synthesised magnetic motion is produced without either mechanical or electrical resistance. This synthesised magnetic motion is aided by forces generated in accordance with Lenz's Law, in order to produce acceleration of the synthesised magnetic motion, instead of physical "magnetic braking" common to mechanically-actuated electrical generators. Because of this novel magnetic interaction, the solid-state static generator of the present invention is a robust generator, requiring only a small electric force of operate.

Brief Description of the Drawings

The appended drawings illustrate only typical embodiments of this invention and are therefore not to be considered limiting of its scope, as the invention encompasses other equally effective embodiments.

FIG.1

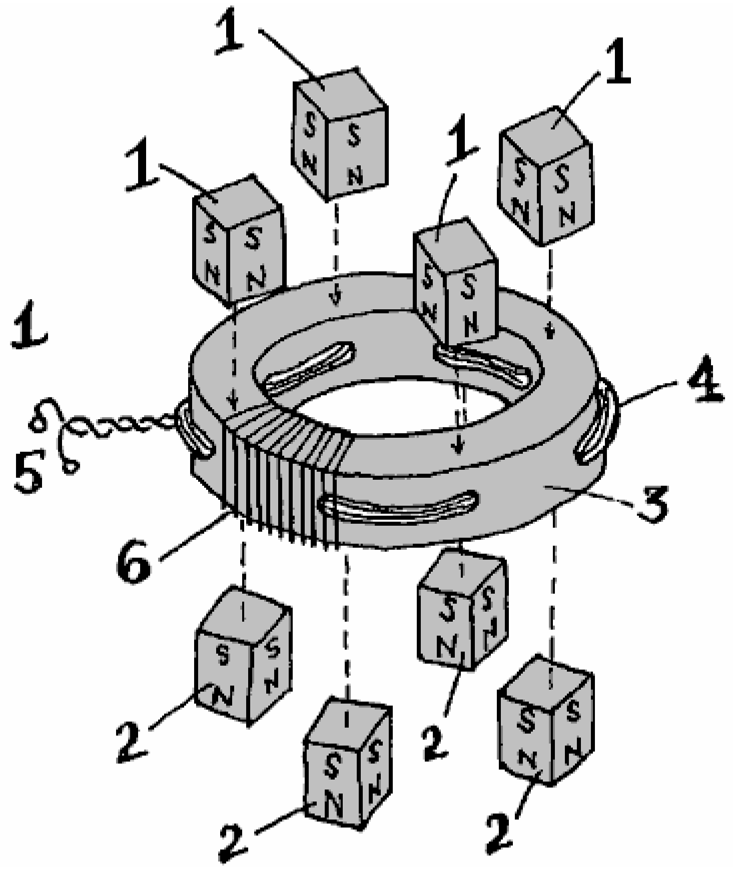

Fig.1 is an exploded view of the generator of this invention.

FIG.2

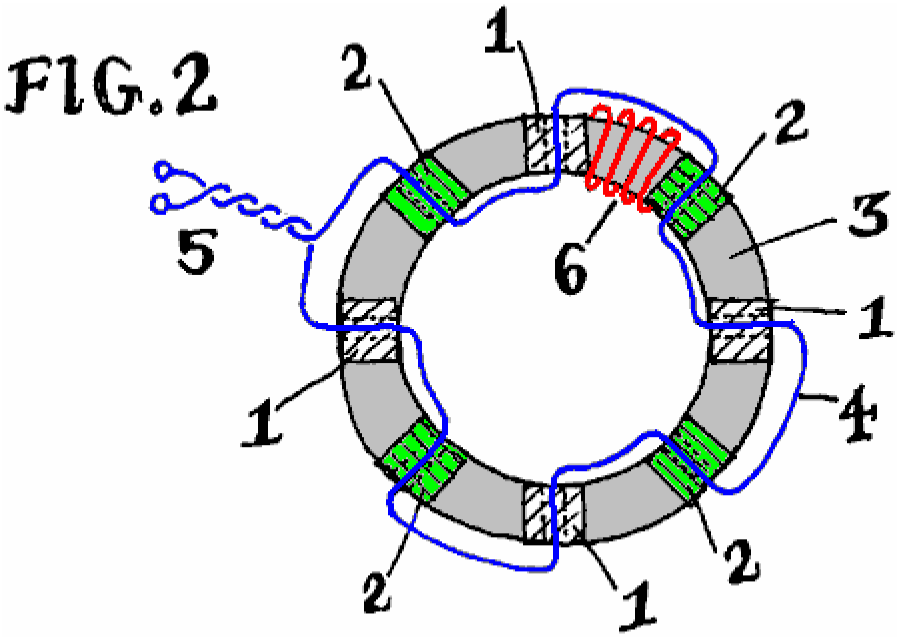

Fig.2 is a cross-sectional elevation of the generator of this invention.

FIG.3

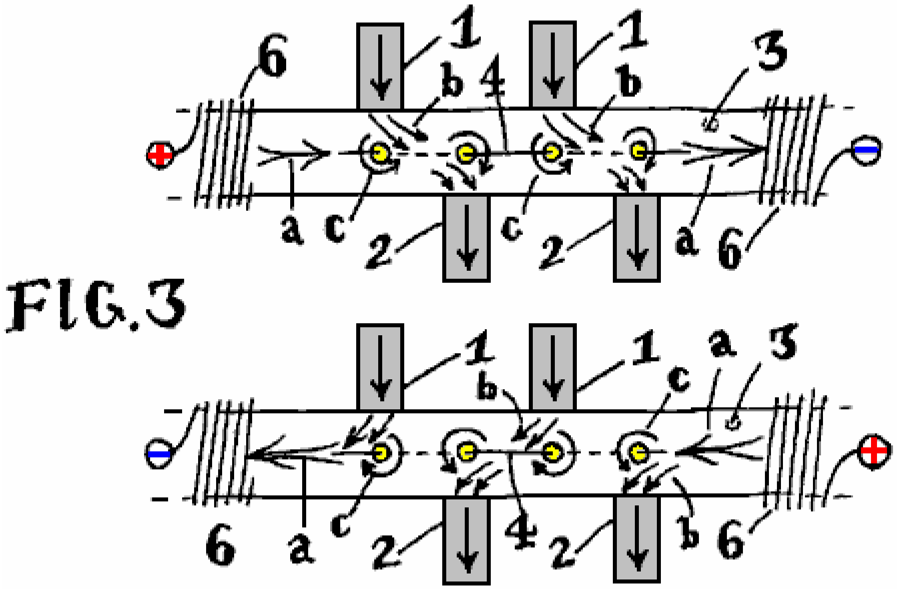

Fig.3 is a schematic diagram of the magnetic action occurring within the generator of **Fig.1** and **Fig.2**.

FIG.4

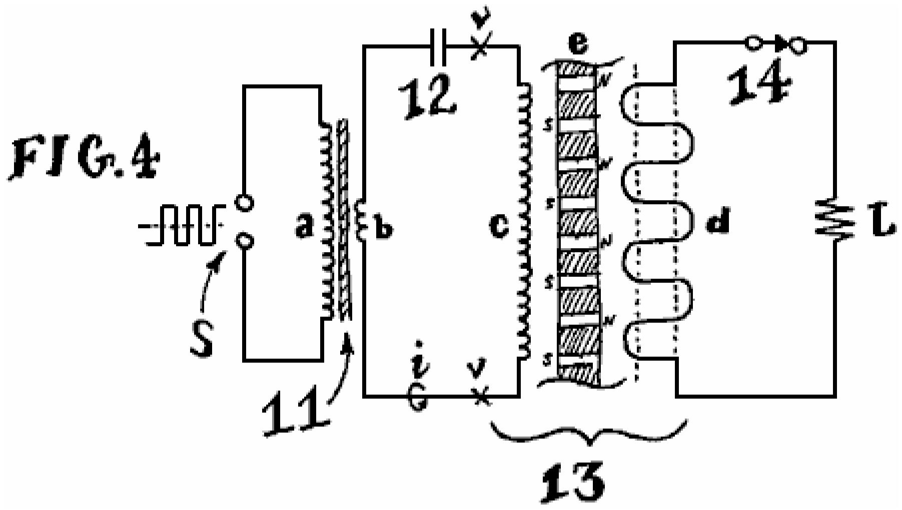

Fig.4 is a circuit diagram, illustrating one method of operating the electrical generator of this invention.

Detailed Description of the Invention

Fig.1 depicts a partially exploded view of an embodiment of an electrical generator of this invention. The part numbers also apply in **Fig.2** and **Fig.3**.

FIG.1

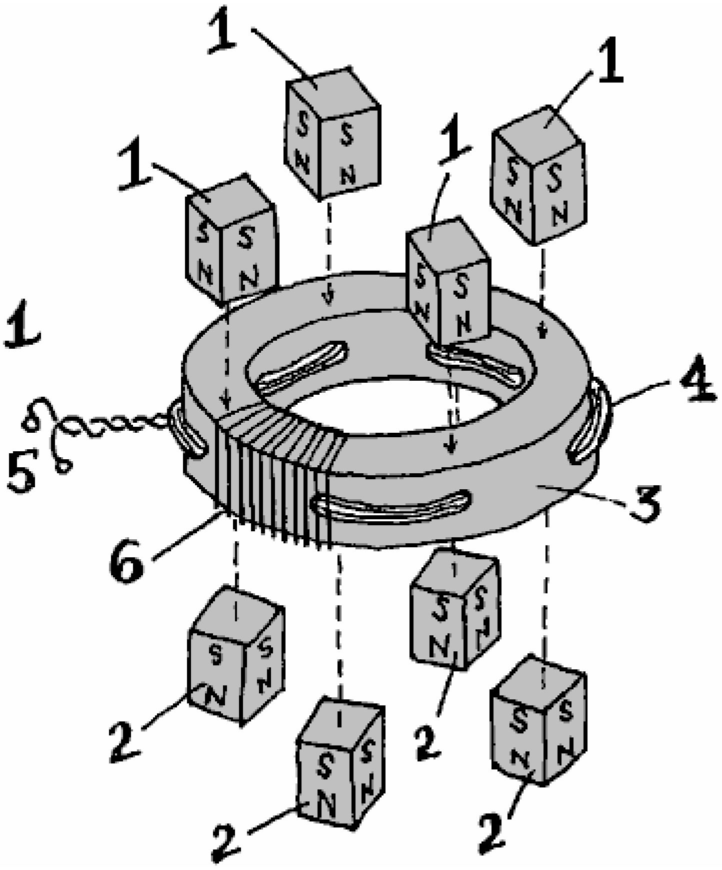

Numeral **1** represents a permanent magnet with it's North pole pointing inward towards the soft ferromagnetic core of the device. Similarly, numeral **2** indicates permanent magnets (preferably of the same size, shape and composition), with their South poles aimed inward towards the opposite side, or opposite surface of the device. The letters "**S**" and "**N**" denote these magnetic poles in the drawings. Other magnetic polarities and configurations may be used with success; the pattern shown merely illustrates one efficient method of adding magnets to the core.

The magnets may be formed of any polarised magnetic material. In order of descending effectiveness, the most desirable permanent magnet materials are Neodymium-Iron-Boron ("NIB"), Samarium Cobalt, AlNiCo alloy, or "ceramic" Strontium-Barium or Lead-Ferrite. A primary factor determining permanent magnet material composition is the magnetic flux strength of the particular material type. In an embodiment of the invention, these magnets may also be substituted with one or more electromagnets producing the required magnetic flux. In another embodiment of the invention, a superimposed DC current bias can be applied to the output wire to generate the required magnetic flux, replacing or augmenting the permanent magnets.

Numeral **3** indicates the magnetic core. This core is a critical component of the generator. The core determines the output power capacity, the optimum magnet type, the electrical impedance and the operating frequency range. The core may be any shape, composed of any ferromagnetic material, formed by any process (sintering, casting, adhesive bonding, tape-winding, etc.). A wide range of shapes, materials and processes is known in the art of making magnetic cores. Effective common materials include amorphous metal alloys (such as sold under the "Metglas" trademark by Metglas Inc., Conway, S.C.), nanocrystalline alloys, manganese and zinc ferrites as well as ferrites of any suitable element including any combination of magnetically "hard" and "soft" ferrites, powdered metals and ferromagnetic alloys, laminations of cobalt and/or iron and silicon-iron "electrical steel". This invention successfully utilises any ferromagnetic material, while functioning as claimed. In an embodiment of the invention, and for the purpose of illustration, a circular "toroid" core is illustrated. In an embodiment of the invention, the composition may be bonded iron powder, commonly available from many manufacturers.

Regardless of core type, the core is prepared with holes, through which, wires may pass. the holes are drilled or formed to penetrate the core's ferromagnetic volume. The toroidal core **3** shown, includes radial holes pointing towards a common centre. If, for example, stiff wire rods were to be inserted through each of these holes, these rods would meet at the centre point of the core, producing an appearance similar to a wheel with spokes. If a square or rectangular core (not illustrated) is used, then these holes are preferably oriented parallel to the core's flat sides, causing stiff rods passed through the holes to form a square grid pattern, as the rods cross each other in the interior "window" area framed by the core. While in other embodiments of the invention, these holes may take any possible orientation or patterns of orientation, a simple row of radial holes is illustrated as one example.

Numeral **4** depicts a wire, or bundle of wires which pick up and carry the output power of the generator. Typically, this wire is composed of insulated copper, though other materials such as aluminium, iron, dielectric material, polymers and semiconducting materials may be substituted. It may be seen in **Fig.1** and **Fig.2**, that wire **4** passes alternately through neighbouring holes formed in core **3**. The path taken by wire **4** undulates as it passes in opposite direction through each adjacent hole. If an even number of holes is used, the wire will emerge on the same side of the core on which it first entered. Once all the holes are filled, the resulting pair of trailing leads may be twisted together or similarly terminated, forming the output terminals of the generator shown at numeral **5**. Output wire **4**, may also make multiple passes through each hole in the core. Though the winding pattern is not necessarily undulatory, this basic form is shown as an example. Many effective connection styles exist. This illustration shows the most simple.

FIG.2

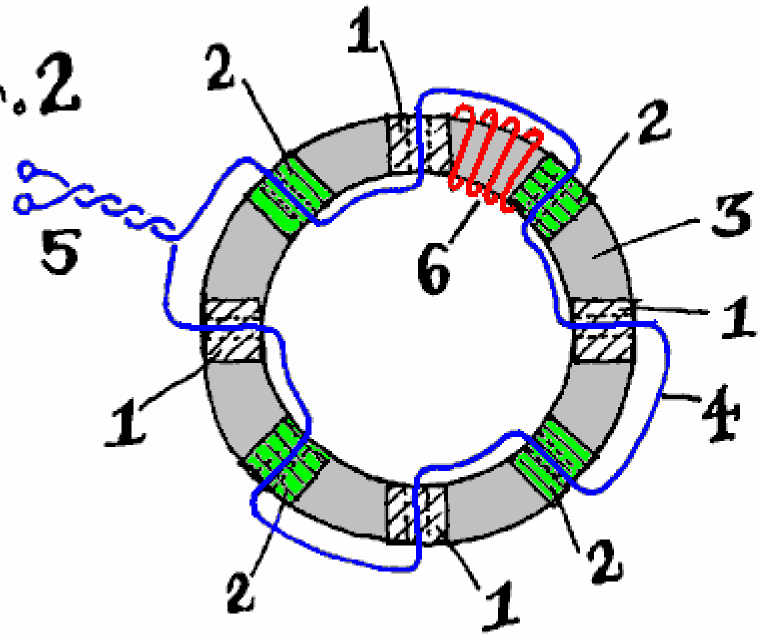

Numeral **6** in **Fig.1**, **Fig.2** and **Fig.3**, points to a partial illustration of the input winding, or inductive coil used to shift the fields of the permanent magnets, within the core. Typically, this wire coil encircles the core, wrapping around it. For the toroidal core shown, input coil **6** resembles the outer windings of a typical toroidal inductor - a common electrical component. For the sake of clarity, only a few turns of coil **6** are shown in each of **Fig.1**, **Fig.2** and **Fig.3**. In practice, this coil may cover the entire core, or specific sections of the core, including, or not including the magnets.

Fig.2 shows the same electrical generator of **Fig.1**, looking transparently “down” through it from above, so that the relative positions of the core holes (shown as dotted lines), the path of the output wire **4**, and the position of the magnets (white hatched areas for magnets under the core and green hatched areas for magnets above the core) are made clear. The few representative turns of the input coil **6** are shown in red in **Fig.2**.

The generator illustrated, uses a core with 8 radially drilled holes. The spacing between these holes is equal. As shown, each hole is displaced by 45 degrees from each of it’s adjoining holes. The centres of all of the holes lie on a common plane lying half-way down the vertical thickness of the core. Cores of any shape or size may have as few as two or as many as hundreds of holes and a similar number of magnets. Other variations exist, such as generators with multiple rows of holes, zigzag and diagonal patterns, or output wire **4** moulded directly into the core material. In any case, the basic magnetic interaction shown in **Fig.3** occurs for each hole in the core as described below.

FIG.3

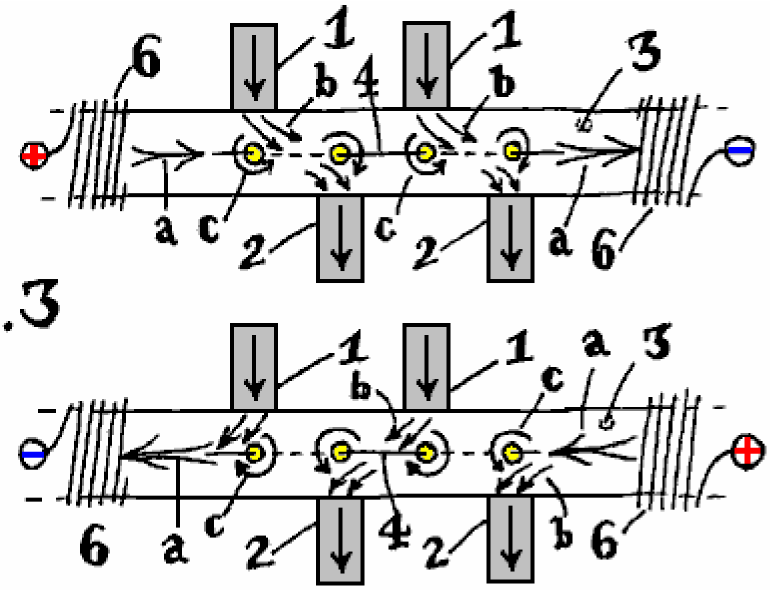

Fig.3 shows the same design, viewed from the side. The curvature of the core is shown flattened on the page for the purpose of illustration. The magnets are represented schematically, protruding from the top and bottom of the core, and including arrows indicating the direction of magnetic flux (the arrow heads point to the magnet’s North pole).

In practice, the free, unattached polar ends of the generator’s magnets may be left “as-is” in open air, or they may be provided with a common ferromagnetic path linking the unattached North and South poles together as a magnetic “ground”. The common return path is typically made of steel, iron or similar material, taking the form of a ferrous enclosure housing the device. It may serve the additional purpose of a protecting chassis. The magnetic return may also be another ferromagnetic core of a similar electric generator stacked on top of the illustrated generator. There can be a stack of generators, sharing common magnets between the generator cores. Any such additions are without direct bearing on the functional principle of the generator itself, and have therefore been omitted from these illustrations.

Two example flux diagrams are shown in **Fig.3**. Each example is shown in a space between schematically depicted partial input coils **6**. A positive or negative polarity marker indicates the direction of input current, applied through the input coil. This applied current produces “modulating” magnetic flux, which is used to synthesise apparent motion of the permanent magnets, and is shown as a double-tailed horizontal arrow (**a**) along the core **3**. Each example shows this double-tailed arrow (**a**) pointing to the right or to the left, depending on the polarity of the applied current.

In either case, vertical flux entering the core (**b,3**) from the external permanent magnets (**1,2**) is swept along within the core, in the direction of the double-tailed arrow (**a**), representing the magnetic flux of the input coil. These curved arrows (**b**) in the space between the magnets and the holes, can be seen to shift or bend (**a** --> **b**), as if they were streams or jets of air subject to a changing wind.

The resulting sweeping motion of the fields of the permanent magnets, causes their flux (**b**) to brush back and forth over the holes and wire **4** which passes through these holes. Just as in a mechanical generator, when the magnetic flux brushes or “cuts” sideways across a conductor in this way, voltage is induced in the conductor. If an electrical load is connected across the ends of this wire conductor (numeral **5** in **Fig.1** and **Fig.2**), a current flows through the load via this closed circuit, delivering electrical power able to perform work. Input of an alternating current across the input coil **6**, generates an alternating magnetic field (**a**) causing the fields of permanent magnets **1** and **2** to shift (**b**) within the core **3**, inducing electrical power through a load (attached to terminals **5**), as if the fixed magnets (**1**,**2**) themselves were physically moving. However, no mechanical motion is present.

In a mechanical generator, induced current powering an electrical load, returns through output wire **4**, creating a secondary induced magnetic field, exerting forces which substantially oppose the original magnetic field inducing the original EMF. Since load currents induce their own, secondary magnetic fields opposing the original act of induction in this way, the source of the original induction requires additional energy to restore itself and continue generating electricity. In mechanical generators, the energy-inducing motion of the generator’s magnetic fields is being physically actuated, requiring a strong prime mover (such as a steam turbine) to restore the EMF-generating magnetic fields’ motion against the braking effect of the output-induced magnetic fields (the induced field **c** and the inducing field **b**), destructively in mutual opposition, which must ultimately be overcome by physical force, which is commonly produced by the consumption of other energy resources.

The electrical generator of the present invention is not actuated by mechanical force. It makes use of the induced secondary magnetic field in such a way as to not cause opposition, but instead, addition and resulting acceleration of magnetic field motion. Because the present invention is not mechanically actuated, and because the magnetic fields do not act to destroy one another in mutual opposition, the present invention does not require the consumption of natural resources in order to generate electricity.

The present generator’s induced magnetic field, resulting from electrical current flowing through the load and returning through output wire **4**, is that of a closed loop encircling each hole in the core. The induced magnetic fields create magnetic flux in the form of closed loops within the ferromagnetic core. The magnetic field “encircles” each hole in the core which carries output wire **4**. This is similar to the threads of a screw “encircling” the shaft of the screw.

Within this generator, the magnetic field from output wire **4** immediately encircles each hole formed in the core (**c**). Since wire **4** may take an opposing direction through each neighbouring hole, the direction of the resulting magnetic field will likewise be opposite. The direction of arrows (**b**) and (**c**) are, at each hole, opposing, headed in opposite directions, since (**b**) is the inducing flux and (**c**) is the induced flux, each opposing one another while generating electricity.

However, this magnetic opposition is effectively directed against the permanent magnets which are injecting their flux into the core, but not the source of the alternating magnetic input field **6**. In the present solid-state generator, induced output flux (**4**,**c**) is directed to oppose the permanent magnets (**1**,**2**) not the input flux source (**6**, **a**) which is synthesising the virtual motion of those magnets (**1**,**2**) by it’s magnetising action on core **3**.

The present generator employs magnets as the source of motive pressure driving the generator, since they are the entity being opposed or “pushed against” by the opposing reaction induced by output current which is powering a load. Experiments show that high-quality permanent magnets can be magnetically “pushed against” in this way for very long periods of time, before becoming demagnetised or “spent”.

Fig.3 illustrates inducing representative flux arrows (**b**) directed oppositely against induced representative flux (**c**). In materials typically used to form core **3**, fields flowing in mutually opposite directions tend to cancel each other, just as positive and negative numbers of equal magnitude sum to zero.

On the remaining side of each hole, opposite the permanent magnet, no mutual opposition takes place. Induced flux (**c**) caused by the generator load current remains present; however, inducing flux from the permanent magnets (**b**) is not present since no magnet is present, on this side, to provide the necessary flux. This leaves the induced flux (**c**) encircling the hole, as well as input flux (**a**) from the input coils **6**, continuing its path along the core, on either side of each hole.

On the side of each hole in the core where a magnet is present, action (**b**) and reaction (**c**) magnetic flux substantially cancel each other, being directed in opposite directions within the core. On the other side of each hole, where no magnet is present, input flux (**a**) and reaction flux (**c**) share a common direction. Magnetic flux adds together in these zones, where induced magnetic flux (**c**) aids the input flux (**a**). This is the reverse of typical generator action, where induced flux (**c**) is typically opposing the “input” flux originating the induction.

Since the magnetic interaction is a combination of magnetic flux opposition and magnetic flux acceleration, there is no longer an overall magnetic braking or total opposition effect. The braking and opposition is counterbalanced by a simultaneous magnetic acceleration within the core. Since mechanical motion is absent, the equivalent electrical effect ranges from idling, or absence of opposition, to a strengthening and overall acceleration of the electrical input signal (within coils **6**). proper selection of the permanent magnet (**1**,**2**) material and flux density, core **3** material magnetic characteristics, core hole pattern and spacing, and output medium connection technique, create embodiments where the present generator will display an absence of electrical loading at the input and/or an overall amplification of the input signal. This ultimately causes less input energy to be required in order to work the generator. Therefore, as increasing amounts of energy are withdrawn from the generator as output power performing useful work, decreasing amounts of energy are generally required to operate it. This process continues, working against the permanent magnets (**1**,**2**) until they are demagnetised.

FIG.4

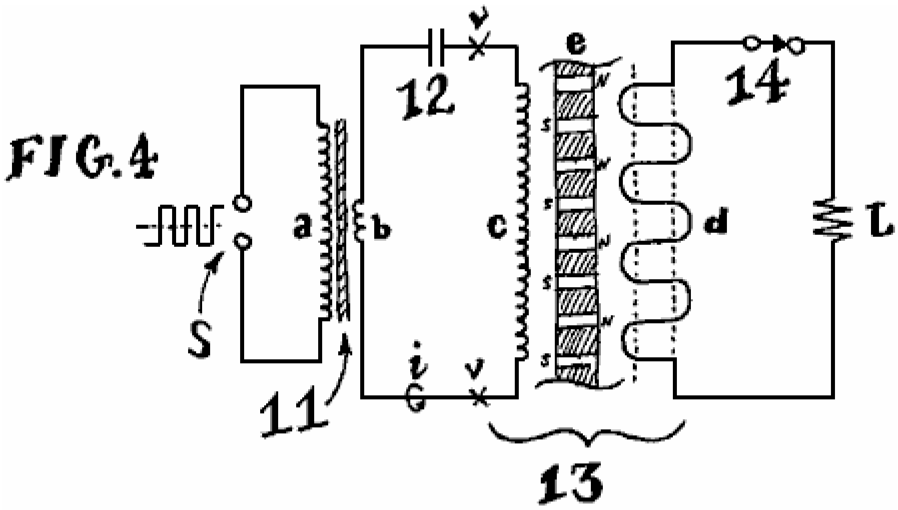

In an embodiment of this invention, **Fig.4** illustrates a typical operating circuit employing the generator of this invention. A square-wave input signal from a transistor switching circuit, is applied at the input terminals (**S**), to the primary (**a**) of a step-down transformer **11**. The secondary winding (**b**) of the input transformer may be a single turn, in series with a capacitor **12** and the generator **13** input coil (**c**), forming a series resonant circuit. The frequency of the applied square wave (S) must either match, or be an integral sub-harmonic of the resonant frequency of this 3-element transformer-capacitor-inductor input circuit.

Generator **13** output winding (**d**) is connected to resistive load **L** through switch **14**. When switch **14** is closed, generated power is dissipated at **L**, which is any resistive load, for example, and incandescent lamp or resistive heater.

Once input resonance is achieved, and the square-wave frequency applied at **S** is such that the combined reactive impedance of total inductance (**b** + **c**) is equal in magnitude to the opposing reactive impedance of capacitance **12**, the electrical phases of current through, and voltage across, generator **13** input coil (**c**) will flow 90 degrees apart in resonant quadrature. Power drawn from the square-wave input energy source applied to **S** will now be at a minimum.

In this condition, the resonant energy present at the generator input may be measured by connecting a voltage probe across the test points (**v**), situated across the generator input coil, together with a current probe around point (**I**), situated in series with the generator input coil (**c**). The instantaneous vector product of these two measurements indicates the energy circulating at the generator's input, ultimately shifting the permanent magnets' fields in order to create useful induction. This situation persists until the magnets are no longer magnetised.

It will be apparent to those skilled in the art that a square (or other) wave may be applied directly to the generator input terminals (**c**) without the use of other components. While this remains effective, advantageous re-generating effects may not be realised to their fullest extent with such direct excitation. Use of a resonant circuit, particularly with inclusion of a capacitor **12** as suggested, facilitates recirculation of energy within the input circuit, generally producing efficient excitation and a reduction of the required input power as loads are applied.

Mark McKay's Investigation of Edwin Gray's Technology: Part 1

Enter…. The Mallory Connection

Mark McKay, PE 3/2/06

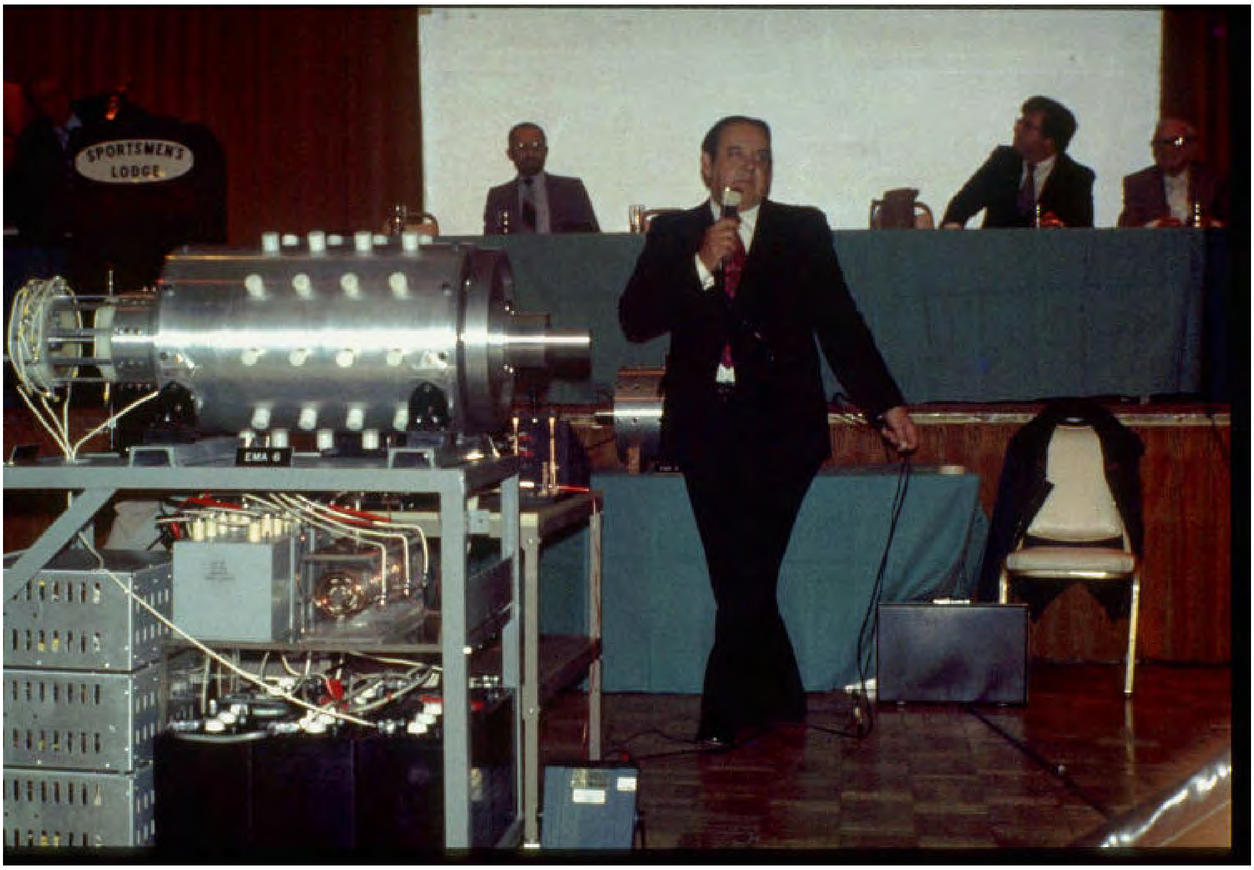

E.V. Gray Version 2.0 type Motor EMA6 1977 – Courtesy Dr. Peter Lindemann

Consider the now classic 1977 photo (above) of Mr. E.V. Gray demonstrating his EMA6 motor to investors at the Sportsman Lodge in Burbank, CA. This photo was taken by Tom Valentine, who wrote a series of informative articles about the EV Gray saga. Dr. Peter Lindemann received this original film from Mr. Valentine to support Peter's research for his book "The Free Energy Secrets of Cold Electricity".

In a fruitful attempt to extract additional technical information from this historical photo Dr. Lindemann arranged to have it digitally enhanced. One of the goals of this effort was to decipher the writing on the large gray storage capacitor directly under the motor. It read:

MALLORY
MADE IN U.S.A.
TYPE TVC-606
5.0 MFD 5000 VDC

Mallory is a well known name in the field of electronics. When one thinks of Mallory today they generally think of the premium large blue electrolytic filter capacitors that dominated the high end linear power supply market in the 70's and 80's. At its peak, the P.R. Mallory Company was a power house of US made electrical components. Not only did they make several lines of capacitors but they also made Battery Chargers, Resistors, Rheostats, Rectifiers, Switches, UHF Converters, Noise Filters, Soldering Iron Tips, and Special Television Components. Their 1955 Catalog was 60 pages long.

Mr. P.G. Mallory started out in 1916 with the invention of the Mercury Battery. By 1965 the company developed the well known Duracell Alkaline battery.

P.R. MALLORY & CO. Inc.
MALLORY

The North America Capacitor Company (NACC) is headquartered in Indianapolis, Indiana. Today, NACC continues to manufacture and market Mallory capacitors at its modern manufacturing and warehouse facilities located in Greencastle, Indiana and Glasgow, Kentucky

Mallory Capacitors and Duracell Batteries from Author's Experimental Parts Reserve

Another important Mallory invention, very relative to the EV Gray technology, was the 1920's development of the "Elkonode", better known back then as simply the "vibrator". Today this device is hardly known at all. In its time it served as a vital sub-system in early DC converters. These were used to raise the low voltage levels of storage batteries to the operating levels required by vacuum tubes, which was 200 to 500 VDC. This now forgotten electro-mechanical component was the functional equivalent of two push-pull power transistors in a modern switch-mode power supply. At the time, when it came to mobile electronics there were two choices. 1) A vibrator based power converter, or 2) A heavy dynamo-motor base converter. For applications under 30 watts the vibrator approach was smaller, lighter, cheaper, and more efficient than the alternative. Therefore, the military had a serious interest this technology, but it was in the mass market demand for small vacuum tube car radios where the real money was made.

The P.G. Mallory Co. almost completely dominated the top end power vibrator market for 40 years and was responsible for almost all of the performance improvements through the 40's and 50's. But, all good things must end. This lucrative product line came to a screeching halt in 1957 with the development of low voltage signal and power transistors. But Mallory still managed to keep a cutting edge in many of its other market areas for several years after that.

So, it is no big surprise when one reads in the 1973 Scagnetti EV Gray article:

The Engine that Runs Itself

By Jack Scagnetti from `Probe The Unknown' in June 1973.

> "Mallory Electric Corporation of Carson City, Nevada, has also made a major contribution toward the design of the electronic pulsing system."

It's all pretty obvious that Mr. Gray had a huge investment in Mallory type components. If his invention did become main stream then the Mallory Co. would have had first shot at a huge new automotive market. Each new vehicle would need between $300 - $600 worth of rugged HV storage capacitors, not to mention an investment of twice that much for vibrator power converters or their equivalent solid state replacements, which Mallory made also.

It is real easy to see how Mr. Gray could have convinced a few executives at Mallory how it would be in their best interests to help him out financially, or at least provide him with a little hardware donation from their Vibrapack division in Irvine CA. Mr. Grays impressive "hands-on" demonstrations were known to be very effective at convincing technical professionals that he was on to something big, providing that he was ever allowed the opportunity to make such presentation to a real decision maker. Most likely some inspired and insightful 3rd level staff person managed to fix him up with a pickup load of surplus vibrator converters that were, or would be, completely obsolete.

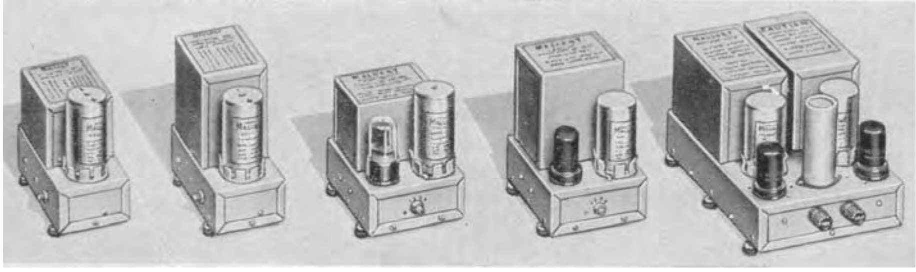

Examples of the P.R. Mallory line of "Vibrapacks" (DC Converters) from 1955 Catalog

All models have a 30 Watt power rating except the one on the far right which is rated at 60 Watts

But this story has an important twist in it……..

The Mallory Company that gave Mr. Gray enough money to make mention of it in the above magazine article was not the P. G. Mallory & Company Inc. but the Mallory Electric Company of Carson City, Nevada, designers and manufactures of a multitude of OEM and after-market automotive ignition systems.

Mallory
IGNITION

HyFire® VI-A Microprocessor Controlled CD Ignition

Mallory ProMaster Classic Series Ignition Coil

Chrome Electronic Ignition Coil

A Small Sample of modern Mallory brand name After Market Ignition Products 2006

Mr. Marion Mallory was the rare sort of independent individual who would start a company on Friday the 13th in February of 1925. He was a self-made inventor with a 4th grade education who was not only brilliant at his craft but also had what it takes to manage a business. If he ever met Mr. Gray face to face the two men would have had a lot in common, especially from a “hands-on” creative energy standpoint. Mr. Mallory made his money in a variety of automotive, motor cycle and marine ignition systems. For years he was the main supplier to the Ford Motor Company for ignition distributors and their upgrades. He received about 30 US and 10 international patents for a multitude of significant improvements in ignition technology, both in electrical and mechanical systems. He was darn good at business, but his personal weakness was high performance auto racing. The market for race car parts is not very big, but the activity it supports is very addictive. Marion sponsored as many as three teams a year in the various classes of professional auto racing. It is also been said that Mr. Mallory looked for and hired like minded creative engineers and technicians. He also despised the union worker mentality that had become so adversarial in the Detroit area between the 50’s and 60’s.

Mr. Mallory finally got fed up with the stifling and counter-productive demands of the United Auto Workers Union. In a rare act of individualism he decided to make arrangements to move his entire company, lock, stock and, ignition coils to Carson City, NV. At this time Marion was getting along in years and unfortunately never made the move. He died in 1968 at the age of 70. His son ‘Boot’ Mallory was then handed the reins of this privately held company. ‘Boot’ terminated all the Union labor and kept 10 of the most productive engineers and technicians who were willing to relocate to the new factory. This facility was opened in 1969. From all accounts the “heir apparent” and only son was very motivated, technically competent, savvy at business, and like his father hopelessly addicted to high performance auto racing.

Given the timing of events it is most likely that Mr. Gray never met Marion Mallory. It is almost certain that the connection to the Mallory Company was entirely between Mr. Gray and ‘Boot’ Mallory. This was also helped by the fact these two men were about the same age with Mr. Gray being 5 years older.

For their entire business careers Marion and ‘Boot’ Mallory were always on the look out for improved ignition systems, both for good business practice and, of course, a desire to sport the fastest cars at the race track. Their knowledge base and field experience covered all approaches to ignition system design, both in the electrical and mechanical areas. It is interesting to note that they developed and manufactured magneto systems as well as traditional distributor systems. Understand that these two technologies are vastly different to each other.

No. 609,250. Patented Aug. 16, 1898.

N. TESLA.

ELECTRICAL IGNITER FOR GAS ENGINES.

(No Model.)

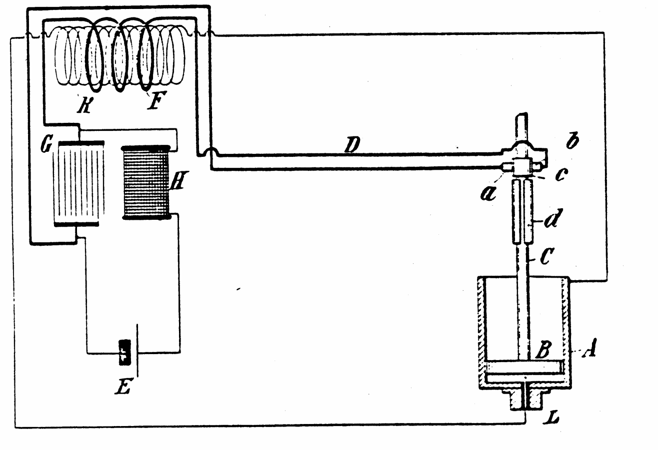

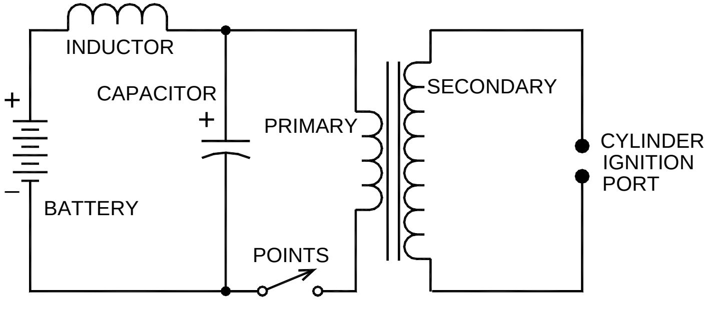

SCHEMATIC FOR TESLA'S "ELECTRICAL IGNITER FOR GAS-ENGINES"
US PATENT 609,250 AUGUST 1898
FIG. 7 (From The Complete Patents of Nikola Tesla)

In the auto racing circles it has always been known that capacitive discharge ignitions system are far superior to the limitations of the standard Kettering induction system, especially at high RPM. Dr. Tesla patented the first CD ignition system as early as 1898 but it was never produced because of serious design and component limitations. Marion Mallory and his engineers did get a working capacitive-discharge system finally connected to a race car engine in 1948. This first design was built employing a thyratron gas tube and vacuum-tube circuitry. As a result, it was costly, bulky, and unwieldy, not to mention fragile and economical unfeasible. But despite all of its failings the Capacitive Discharge Systems (CD) clearly showed its superior performance in the laboratory and on the track. Had it not been for the random and sudden failure of these alpha-test units (because of vibration) they might have still been used in professional auto racing, regardless of their unit cost.

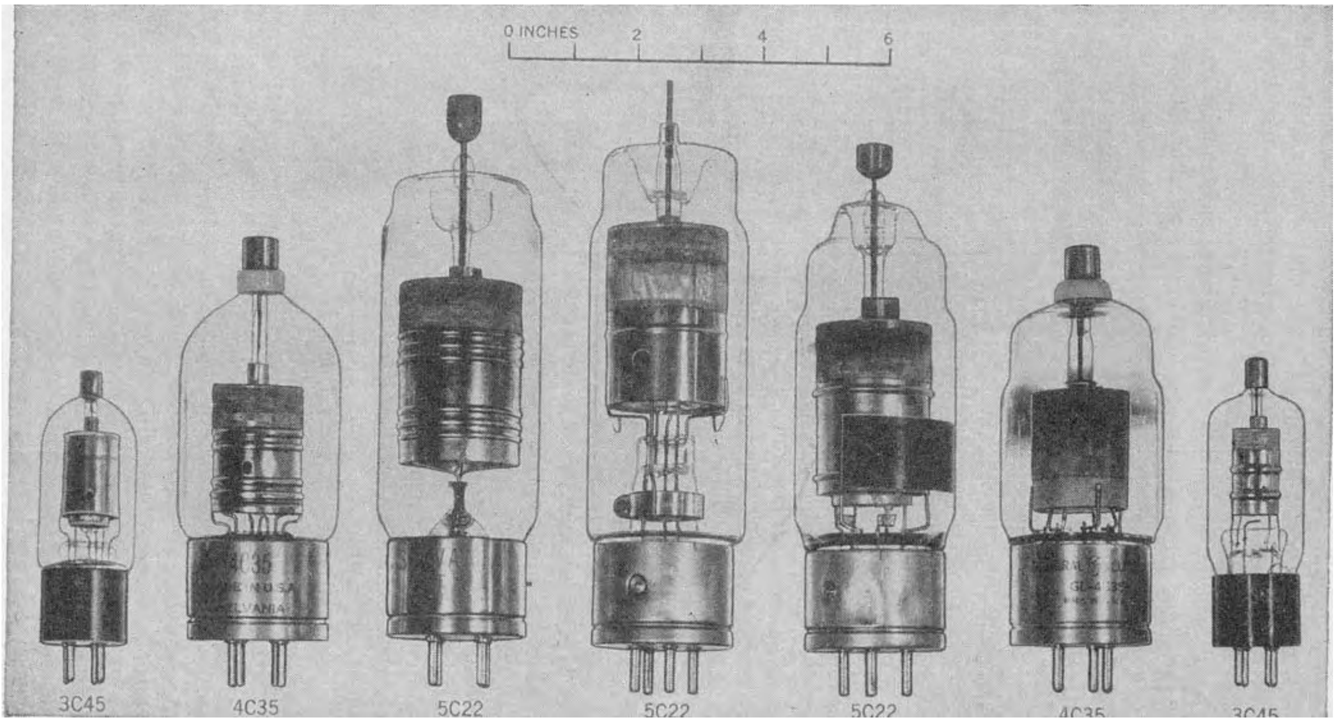

Glass Hydrogen Thyratrons of the 40’s
From “Pulse Generators” Radiation Laboratory MIT 1948

Two new technologies were needed to get CD systems off the ground.

1) Some method to boost the 6 or 12 V DC storage battery voltage to the 400-500 Volt range with an available current of at least 100 mA. (40-50 Watts)

2) A component or technique that would replace the bulky, fragile, and power hungry thyratron that acted as the master timing control switch.

Street/Strip Race HyFire® VI Multi-Strike CD Ignition

HEI/EST Performance Coil

Both solutions came along about the same time. Power transistors became available to the aerospace industry in 1954. These allowed the development of early push-pull switched mode power supplies whose output were way beyond what a mechanical power vibrator could deliver (up to 90 Watts initially). Complete transistor converters were available to the hobbyist in early 1958. So we can assume that prototype power transistors were available to industry in about 1955.

YOU CAN BUILD A TOROID TRANSISTOR POWER SUPPLY*

(D.C. to D.C. Converter)

*using this

TOROID TRANSFORMER

$16.00*

*Plus 50c for packing and mailing
Quantity prices on request

Delivers 225 and 450 volts D.C. simultaneous. Available in 12 or 24 volts. Maximum power 90 watts (transmitter intermittent service). 40 watts continuous.

AND

TRANSISTORS

2 Recommended Types—Both for

$11.00

MORE EFFICIENT! (80-90%)

LESS WEIGHT! (1/10 weight of equivalent Dynamotor Power Supply)

LESS SPACE! (90-watt output from 2" X 2" X 4" unit)

LOW HEAT GENERATION!

GREATER RELIABILITY!

- Designed especially for mobile and portable equipment.
- Each transformer tested in actual power supply unit and FULLY GUARANTEED!
- Complete construction details furnished.
- Special TOROID units and components to specifications on request.
- Manufactured by makers of world-famous SunAir Aircraft Transceivers.

SUNAIR ELECTRONICS, INC.
Dept. 05
Broward International Airport
Fort Lauderdale, Florida

I am enclosing ☐ check ☐ money order in the amount of $16.50 for a TOROID TRANSFORMER, or in the amount of $27.50 for a Toroid Transformer and two matching power Transistors. ☐ 12 volts ☐ 24 volts

Name ....
Address ....
City .... Zone ...... State ....

Early advertisement for a 90 Watt (pulsed) Hobbyist 12V to 450V DC Converter
From “QST” magazine January 1958
(Notice size reduction when compared to the 60 Watt Vibrapack)

The second critical breakthrough came with the invention of the Thyristor or Silicon Controlled Rectifier (SCR) by Bell Labs in 1957. General Electric quickly bought the rights for this promising technology and wasted no time in bringing it into production. The manufacture of solid state power rectifiers and transistors was already well underway, so, building an SCR using the existing production equipment was a slam-dunk. According to the GE SCR Handbook 1964 3rd edition, the model C35 had already been in the field since 1958.

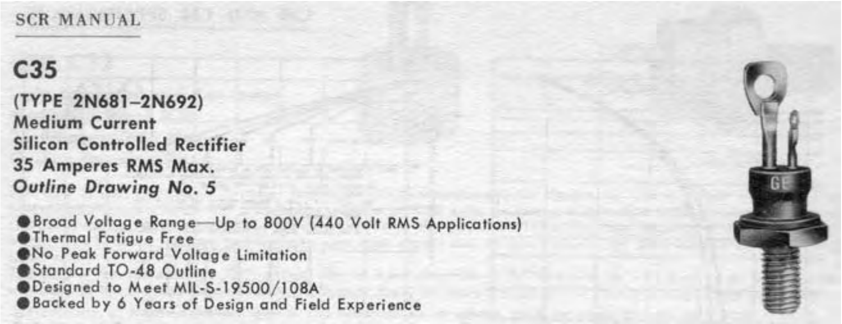

SCR MANUAL

C35

(TYPE 2N681–2N692)
Medium Current
Silicon Controlled Rectifier
35 Amperes RMS Max.
Outline Drawing No. 5

- Broad Voltage Range—Up to 800V (440 Volt RMS Applications)
- Thermal Fatigue Free
- No Peak Forward Voltage Limitation
- Standard TO-48 Outline
- Designed to Meet MIL-S-19500/108A
- Backed by 6 Years of Design and Field Experience

Silicon Controlled Rectifier available to Industry and Military in 1958

With these new solid state components at hand Marion & ‘Boot’ Mallory were off and running. Their first beta-test race track CD ignition system was introduced in limited quantities in the fall of 1961. Their first after market production models did not reach distributors until 1964. It took 3 years of detailed development and waiting for the SCR market to settle down before deciding on a final production design. While the basic operating principles of a CD ignition circuit is straight forward getting a long-life circuit that will function well when exposed to the temperature, voltage, and vibration extremes is a different matter. At that time in our country’s industrial heritage new products were not generally rushed, half-baked, to the re-sellers because of some imaginary dead-line imposed by the bean-counters in the marketing department.

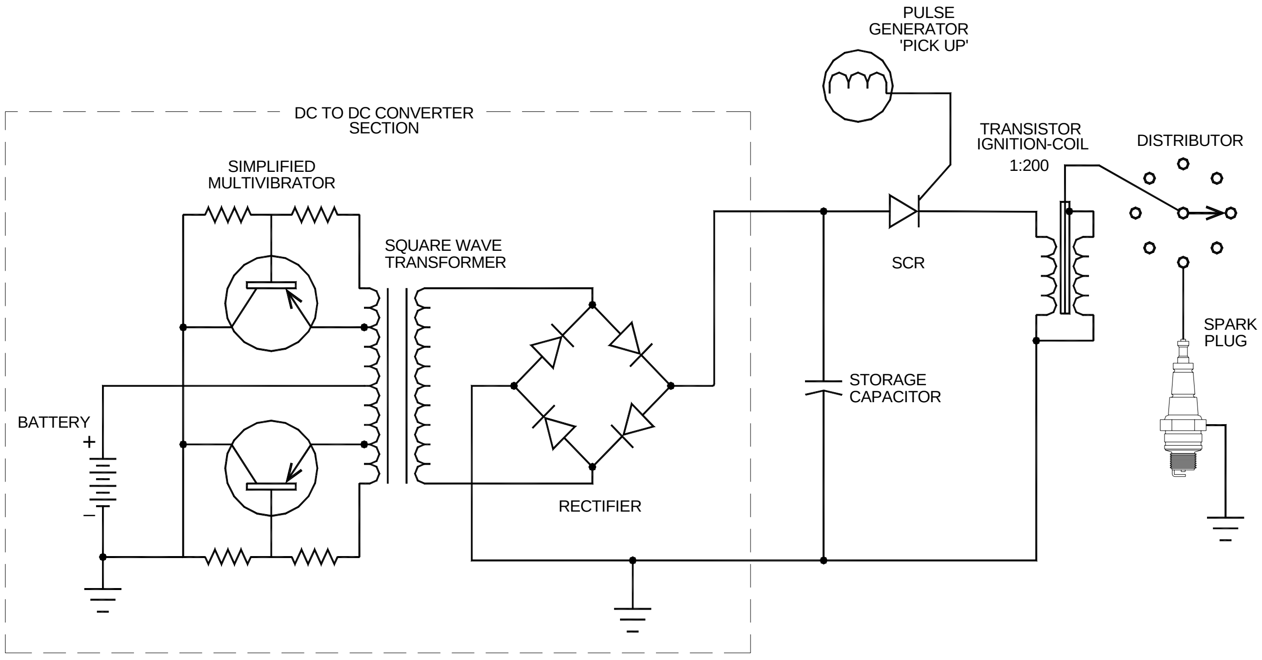

SIMPLIFIED SCHEMATIC OF CAPACITIVE DISCHARGE SYSTEM
CICRA 1975 TO PRESENT
(From Tektronix - Engine Analysis Measurements 1970)

So, in the timeframe of 1960 to 1970 where could Mr. Gray have gone when he needed some rare applied technical expertise on battery operated High Voltage pulse systems? The solution seems almost obvious.

We have no doubt that Mr. Gray and ‘Boot’ Mallory were on a first name basis. They may have already developed some kind of relationship while the company was still in Detroit, we don’t know when they first got together. We do know that Mr. Gray was provided with some significant venture capital along with the fruits of 10 or so years of proprietary field tested solid state CD technology.

It has been pointed out, by knowledgeable sources, that all of the Mallory’s after market ignition systems used power transistors for the 6-12V to 450V converter section. So, we wonder, why was Mr. Gray still using obsolete vibrator packs in 1973? ‘Boot’ would have certainly supplied Mr. Gray with the most modern equipment, along with the SCR and Ignition-Coil components in a small, self contained, custom engineered, and de-bugged package.

We suspect that ‘Boot’ did provide these complete transistorized CD systems and that Mr. Gray was eagerly looking forward to the reduced size, increased life time, and improved efficiencies that the new solid state devices promised. Especially after having to constantly fight with vibrators that kept burning out during his trial runs. But, Radiant Energy (RE) generation has its own special challenges to deal with. One major engineering issue is what to do with the Electro Magnetic Pulse (EMP) like effect that happens when a RE circuit reaches a certain power level. If all that excess energy is not properly shunted to the system common (hopefully after doing some serious work) it escapes from the circuit conductors to charge every metal object within 20’ or so of the generator. A multitude of blue-white sparks will erupt from every metallic object in a room, due to the induced high voltage. This is certainly an interesting light-show, with the lights turned off, but devastating to any near by transistor or IC that has any amount of wire connected to it. Transistors and IC’s that are stored in metalised protective bags or boxes seem to survive.

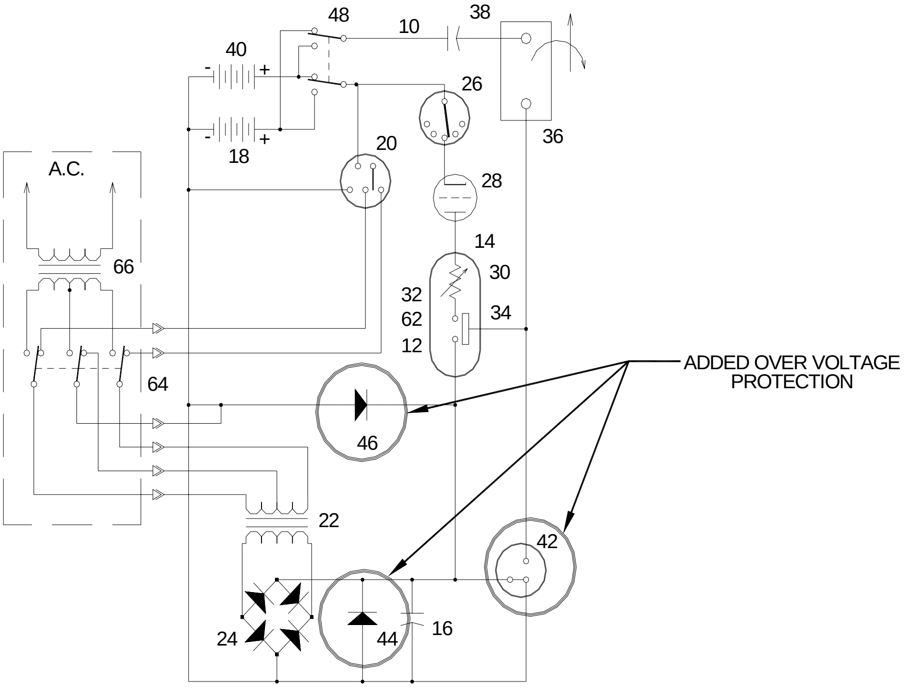

THE GRAY CIRCUIT PER PATENT 4,595,975
JUNE 17, 1986

If this was the case, then we can imagine how disappointed Mr. Gray might have felt when his new transistorized converters started to fail, perhaps even catastrophically. Fortunately, and **we really mean very fortunately,** the SCRs were able to survive the RE onslaught. Had this not been the case the EV Gray technology, because of the constant system failure, would have seriously fallen on its nose by 1965 and never have been able to produce the demonstrated power levels that we would so very much like to recreate. Transistors, fail because they are constructed with super thin base structures that are sensitive to moderate voltage differences. SCRs are constructed with thick silicon layers that are relatively more rugged. However, a poorly designed trigger circuit in an RE application will still destroy a heavy duty SCR, if proper gate transient protection methods are not employed. Because of this first hand experience Mr. Gray went on to install many over-voltage protection devices in his future circuits. This is very apparent in the design of the power supply shown in his Conversion Tube Patent #4,595,975.

It appears that Mr. Gray was forced to go back and use the failure prone obsolete vibrator packs that he started out with. According to the first patent these were used for the primary DC voltage conversion. We suspect that the engineers at Mallory were enlisted to help Mr. Gray marry the vibrator pack to the SCR system. The SCR addition did help solve the failure problem by reducing the arching current across the vibrator contacts. This is not a straight forward interface and it requires some experienced electronic know-how. The challenge is balancing the limited current capacity of the vibrator to the low impedance of the SCR storage capacitor.

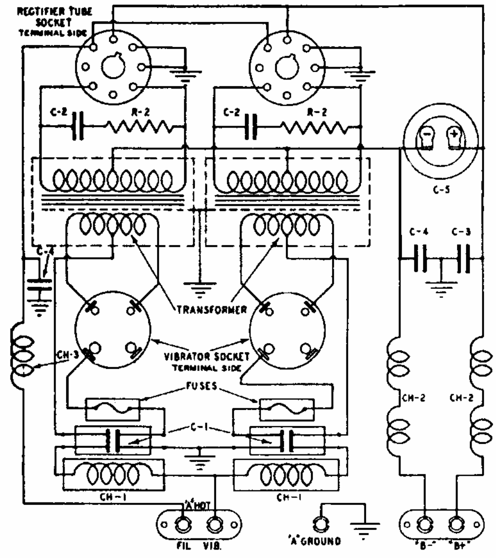

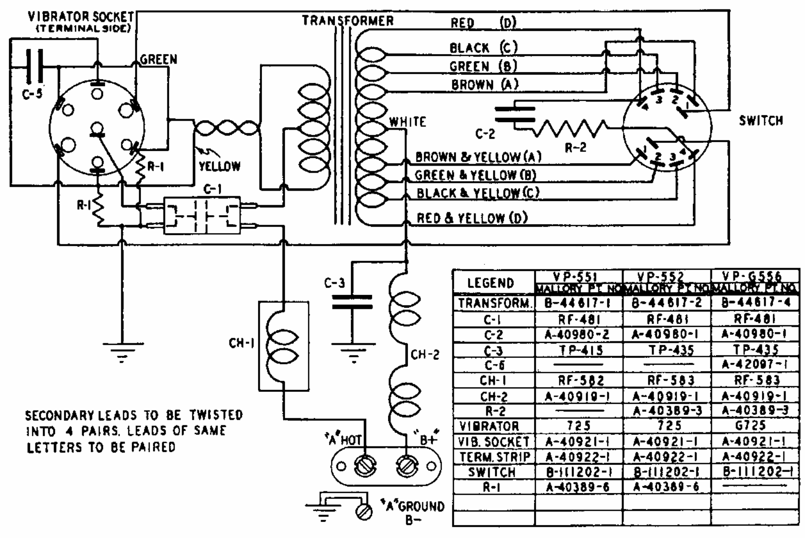

SECONDARY LEADS TO BE TWISTED INTO 4 PAIRS. LEADS OF SAME LETTERS TO BE PAIRED

LEGEND	VP-551	VP-552	VP-G556
	MALLORY PT. NO.	MALLORY PT. NO.	MALLORY PT. NO.
TRANSFORM.	B-44617-1	B-44617-2	B-44617-4
C-1	RF-481	RF-481	RF-481
C-2	A-40980-2	A-40980-1	A-40980-1
C-3	TP-415	TP-435	TP-435
C-6	———	———	A-42097-1
CH-1	RF-582	RF-583	RF-583
CH-2	A-40919-1	A-40919-1	A-40919-1
R-2	———	A-40389-3	A-40389-3
VIBRATOR	725	725	G725
VIB. SOCKET	A-40921-1	A-40921-1	A-40921-1
TERM. STRIP	A-40922-1	A-40922-1	A-40922-1
SWITCH	B-111202-1	B-111202-1	B-111202-1
R-1	A-40389-6	A-40389-6	———

FIG. 28—SCHEMATIC WIRING DIAGRAM FOR VIBRAPACKS
Nos. VP-551, VP-552, VP-G556

Schematic Wiring Diagrams for two P.R. Mallory Vibrapacks
60 Watt model on the left – 30 Watt model on the right

Other researchers contend that Mr. Gray never intended to use transistors in the first place. This is because one RE theory states that the non-classical process begins in the minute arcs formed during the making and breaking of the vibrator contacts. This technical issue is still open for debate and experimental verification.

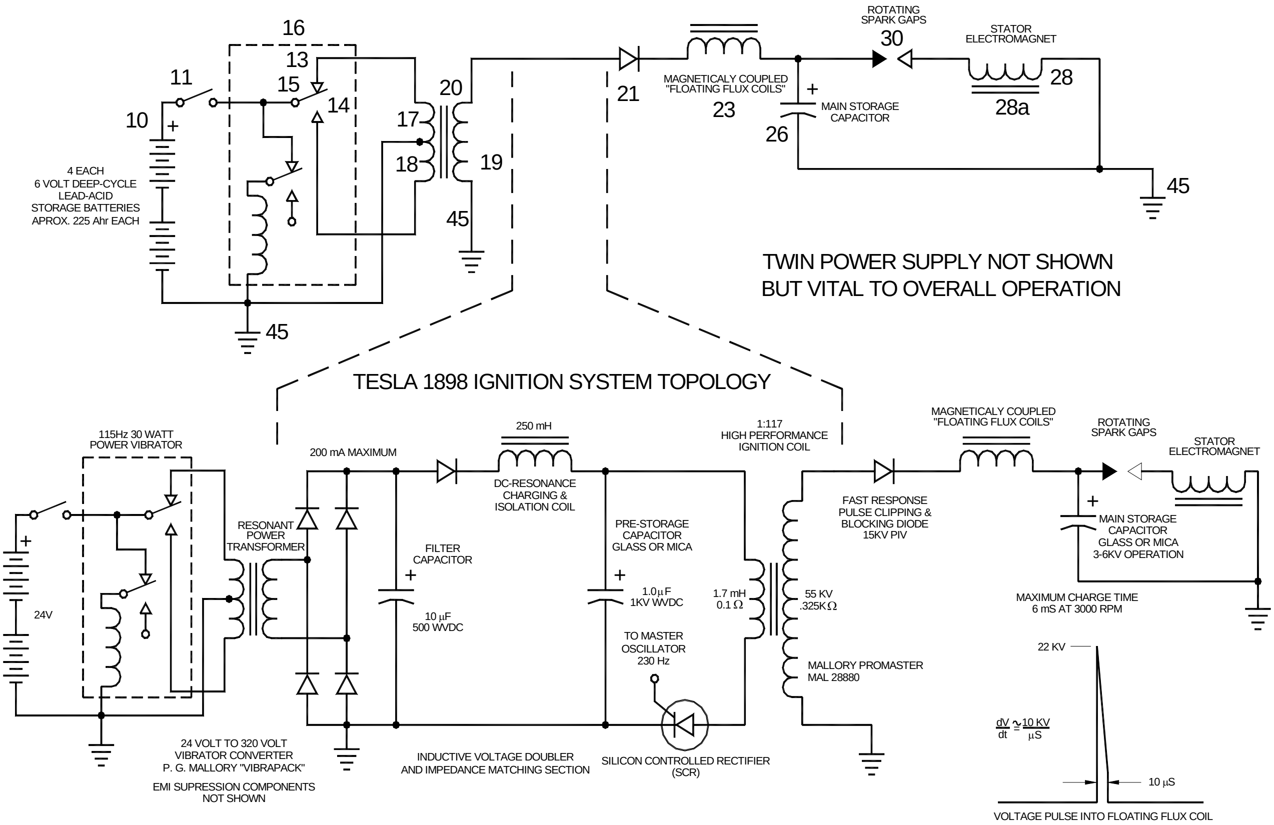

PROPOSED NON-DISCLOSED CAPACITIVE DISCHARGE SUB-SYSTEM IN EV GRAY CIRCUIT

However, we all agree that the SCR CD circuit is still a vital sub-system to the EV Gray technology, but it is not the whole story for a complete Over Unity (OU) process. We further believe that Mr. Gray didn't disclose the kernel of his "secret" to 'Boot' or any one else at the Mallory Electric Company. It would appear that 'Boot', because of his unique individualistic upbringing, respected Mr. Gray's right to his own creations. 'Boot' was obviously far sighted enough to see some greater business potential in this venture, not to mention a whole new class of future racing machines. One main reason for this enlightened attitude was that 'Boot' didn't have to contend with a short-sighted governing board of directors whose members were more worried about next quarters stock price than taking risky chances on age changing technologies.

The CD sub-system of the Gray motor was not disclosed in patent #3,890,548. Mr. Gray did mention the use of ignition coils in the patent text, but didn't show them in the schematic diagram. The simplest solution to help protect his "secret" was to just eliminate the CD sub-system from the schematic. Since Mr. Gray was only attempting to disclose a new type of pulse motor in this first patent. The omission of a "minor" power supply "feature" was not going to mean anything to the patent reviewers. But, the devil is in the details, especially when attempting to reconstruct this lost technology 30 years later.

There is a good possibility that Mr. Gray was returning a favor to 'Boot' by not disclosing the proprietary CD circuit designs. They very well could have had a gentlemen's agreement and a joint venture on this issue. 'Boot' didn't need to know Mr. Gray's Free Energy "Secret". His high margin piece of the action was locked in because each new EV Gray motor would need 18 or more complete CD power supplies, including the patented construction details of the Mallory ignition coils. Mr. Gray's success was going to be 'Boot' Mallory's success – BIG TIME. A classic win-win situation. It's no wonder that 'Boot' willingly made out checks to this unknown and un-educated inventor from California. While the P.R. Mallory Company was unknowingly going to reap some benefit from this breakthrough the Mallory Electric Company was going to hit the jackpot.

As a purely speculative observation, it may have been 'Boot' Mallory who clued Mr. Gray in on how to write patents and attempt to protect one's intellectual property form the big business lawyers. What to show and what not to show, what to draw and what not to draw and what to say the rest of the time. With this technology it was going be a feeding frenzy as soon before the first beta-test hit the street and 'Boot' knew it. Mr. Gray probably received a life time of inside information on how to keep secrets, make money, and cover one's assets from a man who had been there and seen how big business really works.

We all know that Mr. Gray suffered a major setback when his research facility was raided in 1974 by the agents of the Los Angles District Attorneys Office for suspected securities fraud. But, by 1977, as shown in the photo above, Mr. Gray had recovered enough to receive his first patent, build, debug, and demonstrate his second generation motor. What is not generally known, in Free Energy circles, is that Mr. Gray suffered a far greater loss when 'Boot' Mallory was killed in a car wreck in 1978 at the age of 48. He was always known to be somewhat of a lead foot.

Gone was the financial, technical and morel support. As far as we can observe it appears that the EV Gray motor didn't develop significantly much beyond the EMA6 model (above). The surviving Mallory women sold the company to Super Shops of Irvine, California in 1979. Mr. Gray continued to seek a proper level of investment capital so that he could control and manufacture his fuel-less motors in-house. He also improved on his popping-coil demonstration and updated it to a continuous process that hinted at anti-gravity possibilities, very impressive. It has also been rumored that Mr. Gray almost did collect enough money to begin production.

Unfortunately, we also know that ten years later Mr. Gray died under un-resolved circumstances in Sparks, NV in April, 1989. Sparks is just East of Reno, NV which is about 50 miles North of Carson City, NV. Some researchers contend that the main reason why Mr. Gray established one of his multiple laboratories in this town was because of the invaluable technical experience of some of the retired Mallory technicians still living in the area.

We have also been lead to believe that it was 'Boot' Mallory who made the first formal introductions between Mr. Gray and the alternate car inventor Mr. Paul M. Lewis, creator of the "Fascination". You can imagine the possible creative energy that might have flowed between these three unique individuals while they were sitting around the dinner table sharing a host of far-reaching dreams and schemes.

Today, the sold and re-sold fragments of the P.R. Mallory and the Mallory Electric Company have suffered, like so many U.S. businesses, from the now common and insidious blight of globalization. Both organizations are outsourcing their manufacturing operations to China, their engineering departments to India, and their R & D efforts to Canada.

In conclusion all we can say is that this saga is truly a vital lost opportunity for the world, they were so darn close. Had this story been different we most likely wouldn't be bankrupting our country in a vain attempt to secure oil reserves in Iraq. We could have easily had permanent colonies on Mars and not be worrying about the ongoing effects of Green House Gasses. This great country could have re-invested the trillions of our oil dollars into our own economy rather than providing excessively lush life styles for a few privileged Middle Eastern clan leaders.

Note: This document is one in a series produced by Mr. McKay as part of his investigation of the work of Edwin Gray senior and he invites readers to contact him if they have any constructive comments or queries concerning the work of Mr. Gray. Mr McKay's e-mail address is mmckay@tycoint.com

Mark McKay's investigation of Edwin Gray's Technology: Part 2

Taking a closer Look at the Demonstration Equipment
October 24, 2006

This is the classic photo of E.V. Gray's "Popping Coil" Demonstration apparatus. This can be found on Peter Lindemann's web site. This photo was taken by Tom Valentine in 1973. Mr. Gray is the man in the center and Fritz Lens (his new father-in-law) is on the right. The man on the left is unidentified (most likely Richard Hackenburger VP of Engineering).

For years, about all one could say about this photo was that there was a fair amount of equipment involved in these demonstrations. The energy source appears to be a common large automotive 12 volt battery. Identifiable components are the custom made air transformer and the Triplett 630-A multimeter, all the rest of the technical detail is hidden by the black Plexiglas instrument boxes. By itself this photo does not yield much information.

In 2004 a former E.V. Gray investor came forth and presented Peter Lindemann and John Bedini with a period collection of historical snapshots. Five of these photos were of the same apparatus that was shown to Mr. Valentine in the above photo. The location was different, but the equipment and layout appears to be the same. It is assumed that these new investor photos were taken at Mr. Grays shop in Van Nuys, CA. These photos were developed in January and June of 1974 so they could have been taken within a few months of the Valentine 1973 photo. By observing these photos some additional technical information about this novel technology can be extracted.

The Investor Photos:

Investor Photo #013C
Overall View

This is a nice shot of the whole demonstration apparatus from one end of the table showing the supply battery, two popping coils and an end view of the air transformer. Despite the limited focus, this photo shows that the popping coils are connected in parallel since the white leads on the left are both terminated on the negative terminal of the battery. Also connected to the battery is a component that appears to be an analog metering current shunt - a low value high current resistor device. However, there is no meter connected to this component as there would be in a normal application. This suggests that it is being used simply as a low value current limiting resistor. It is doubtful that this component was ever intended to be used in a metering capacity. Its output would have been a very short voltage pulse that could not be recorded or observed on any of the test instrumentation shown in any of these photos.

It is believed that the two black leads on the right of the air transformer are disconnected and hanging straight down to the floor. Compare this situation to the Tom Valentine photo where these heavy black leads are connected to two of the black boxes.

There appears to be four black wires connected to the right side of the electromagnets. The two larger black wires are thought to connect to the wiper of the DPST knife switch. It is not known for sure where the small remaining black wires connect, but most likely to an additional set of electromagnets parked under the air transformer as shown in photo #013B. If so, then there probably was an accompanying demonstration that showed what would happen if additional load was added to the circuit.

Investor Photo #012D

Popping a coil with the second demonstration setup on the “Right”

This photo is taken at the same location some time earlier where the circumstances were slightly different. The small white table and its attending equipment that is shown in the future June 74 photos are not preset. This photo (Jan 74) was developed 6 months before Photo #013C. The equipment on the large table seems to be in the same relative positions. What this photo reveals is that there is a second “Popping Coil” demonstration taking place at the other end (right side) of the table.

It is proposed that this total assembly of “Black Boxes” (a dozen or more subsystems) actually supports two different and independent demonstrations, a “Popping Coil” demo on the left and another similar “Popping Coil” demo on the right. The photos available allow for a better technical analysis of the demonstration equipment on the left side of the table. It is unknown as to what the actual differences between these two demonstrations were, however it is apparent that the coils being popped have obvious size differences. In photo #012D the coil in mid air is about twice the size of the electromagnets shown at the other end of the table in photo #013C. The Tom Valentine photo shows a set of electromagnets (at rest in the lower right hand corner) that are at least four times the size of the coils used for the demonstration that was set up on the left side of the table. However, the launched coil shown above is not the same (being 50% smaller) as the coil shown in the Tom Valentine photograph, even though it is being powered by the same equipment.

It is thought that the demo on the right had something to do with a higher power level or a more advanced method of energy recovery. Most likely, the demo on the left was intended to make the initial technical introduction to the basic idea of a repulsion motor concept, while the demo on the right had some important engineering advancement to display.

Photo #012D is dark but it helps shows that the two white wires from the DPST knife switch for the left demo connect to the two equal size boxes in the middle of the table, one wire per box.

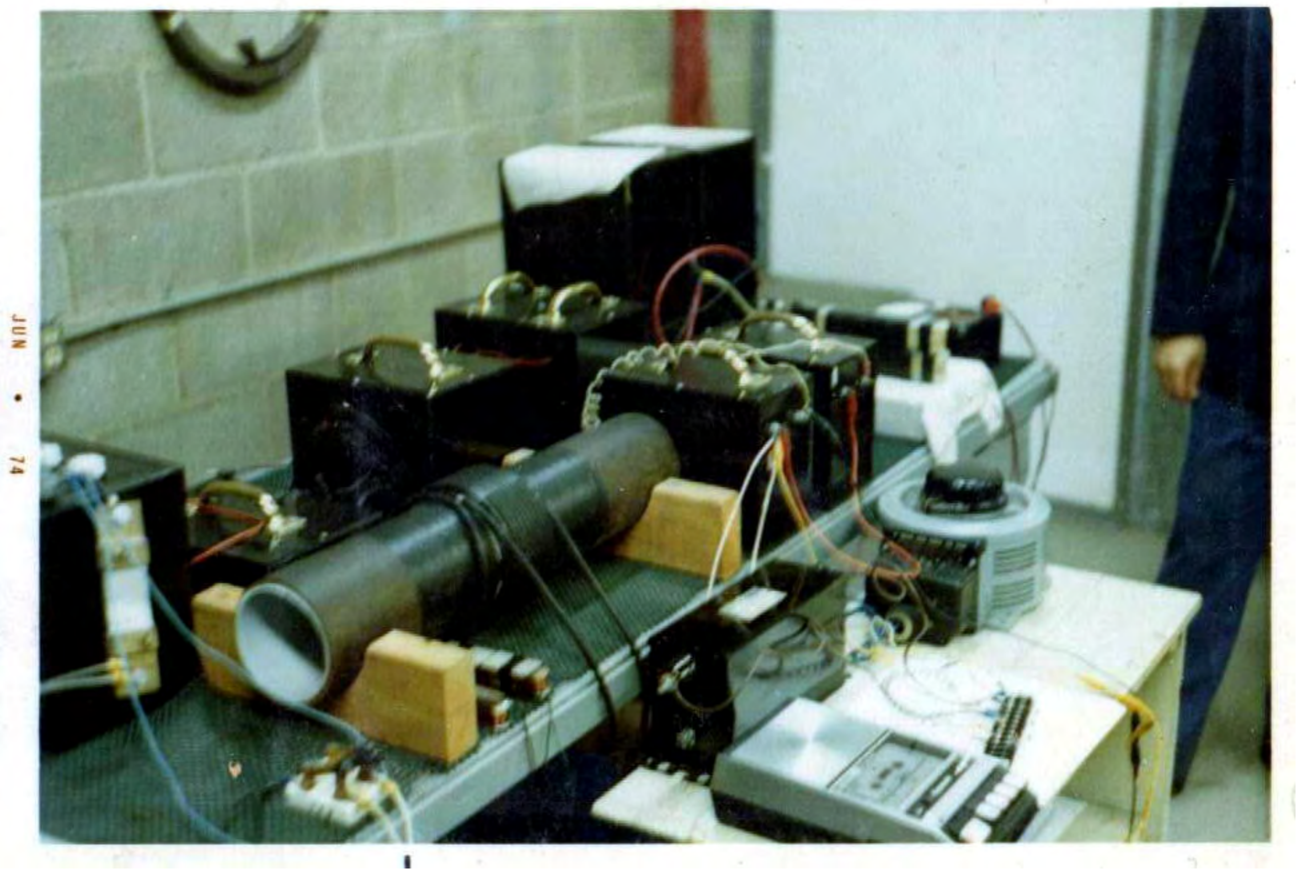

Investor Photo #013B

120VAC Power Source being explored

This June 1974 photo is a nice over view of the “left” demonstration equipment. The major issue here is the additional equipment on the small white table. Here we see some identifiable items, a neon transformer, a 2KW Variac autotransformer, a cassette tape recorder and a barrier type terminal strip. The question is: What is this extra stuff for?

It appears that this setup is a variation from the normal equipment demonstration as seen in the Tom Valentine photo. It seems that the Air Transformer is disconnected from the system and has been replaced by the power provided by the equipment on the white table. Most likely this was an attempt to demonstrate that AC line power could be converted to “Cold Electricity”. It is important to note the variations in this particular circuit layout as it provides some clues as to the function of the various Black Boxes.

First, notice that the two white wires that go to the DPST knife switch have now been connected to one terminal of the black box, while a red jumper connects to the white wires’ previous connection point. Compare this to how these white wires are connected in the Tom Valentine photo.

It is not all together clear how the Neon transformer and Autotransformer are connected but a standard approach would be to have the Variac control the input line voltage to the Neon transformer. This Variac has the ability to increase its output voltage by 25% above its input. If this Neon transformer were a common 15KV 30 mA unit then the RMS output voltage could have been adjusted to a maximum of 18 KV. This is comparable to the output of an auto ignition coil. The peak DC voltage potential would have been about 25KV. However it is unlikely they were operating at this high of voltage for very long because of the size, layout and construction of the temporary conductors.

Since a single pair of conductors (yellow and black jumpers) drop below the top of the white table it is proposed that there is a high voltage diode stack underneath the table on a shelf that is operating in half-wave mode. Had full-wave mode been used then four wires would be seen leaving the top of the table (which is still a possibility).

The utilization of DC pulses is very clear in the Gray motor patent. It has often been wondered why Mr. Gray didn’t use full-wave rectification in his power supply to take advantage of the increased efficiency. Apparently this equipment does not have a taste for straight DC voltage. This concept is reinforced by the use of the half-wave rectification power supply shown in photo #013B. This situation supports the idea that Mr. Gray may have had capacitors connected in series, without equalization resistors, thus pulsating DC would have been needed to charge them.

Photo #013B shows the best view of the demonstration equipment for the “Right” demonstration. It seems to be composed of five Black boxes, two small ones, two large ones, and one small flat one. If a knife switch was used to launch the popping coil it is not visible in these photos. An air transformer seems to be missing from this equipment collection. However, consider the cylindrical object seen under the large table in photos #012D and #013D. This is about the size of a gallon paint can and has yellow tape on top. Three black wires (and possibly a fourth) can be seen leading to this device. It is proposed that this is the air transformer used for this equipment. It has a larger diameter (8”) than the air transformer that is used for the “Left” demonstration (4”). It is believed that the automotive battery seen at the left end of the large table is the prime source of power for both demonstrations. A Triplett 630-A multimeter can be seen laying down on the far right of the table.

Examine the air transformer in its disconnected configuration. Notice how the two black conductors roll off the coil to the floor. This can only be achieved with two separate layers. The nearest conductor is part of the first layer. From this observation the relative polarity of the air transformer can be determined.

The core of the air transformer appears to be about 4” in diameter, when compared to the 2”x4” support blocks. It appears to be of a dual layer construction like one kind of pipe was slipped over another. The inner pipe resembles gray electrical PVC, but thinner (could be schedule 20 pipe). The outer pipe is a dark brown material that is not a common modern construction material. It is closer to an older fiber-composite material that was used for sewer pipe in the 50’s. Why the need for two nested cores? Is the dielectric breakdown of the core that big of an issue for such a small air transformer? The insulation strength of the (assumed) spark plug wire is near 50KV and should be plenty for the operating voltages expected. In addition there appears to be a hefty layer of electrical black tape between the core and the heavy windings.

It has been proposed that the black tape covers a single layer of #16 AWG magnet wire that forms a winding 3-4 times longer than the observed spark plug wire “primaries”. This feature (if it exists) is considered to be an additional energy recovery subsystem.

Investor Photo #013C
Group Photo Session

This photo is too fuzzy to extract much additional detail, (as compared to photo #013C) however the 35mm camera that is being held by the gentleman on the right is clear enough. Also, note the Flash Cube snapshot camera sitting beside the autotransformer. Cameras are in abundance in this portrait. This suggests that this particular collection of photos (June 74) were the result of a planned event where selected investors were allowed take all the snapshots they wanted. It is believed that this was a rare event. Therefore we can be assured that the equipment displayed at this time had been personally sanitized by Mr. Gray to insure that none of the essentials of his "Secret" would be disclosed.

The well dressed gentleman, on the left, appears to be holding another cassette tape recorder with a black plastic microphone being held in his fingers.

Investor Photo #013D

Count the Turns on the Air Transformer

This is about the best photo available showing the overall layout of both coil popping demonstrations. A lot of the essential details are hidden in this presentation but some of the subsystem interconnections can be determined.

The lower shelf of the white table displays what appears to be a HV "door knob" capacitor that is connected to Yellow and Black jumpers. It is more likely that this is a HV diode.

Note: This document is one in a series produced by Mr. McKay as part of his investigation of the work of Edwin Gray senior and he invites readers to contact him if they have any constructive comments or queries concerning the work of Mr. Gray. Mr McKay's e-mail address is mmckay@tycoint.com

Mark McKay's investigation of Edwin Gray's Technology: Part 3

Secrets of the EMA4 and EMA5 Control Commutators (Still Unresolved)

Mark McKay, PE

While the technical revelations provided by the disassembly of Mr. Gray's custom electromagnets is important, the observations collected from the EMA4 and EMA5 control commutators are even more interesting (and perplexing).

Prior to the recovery of the EMA4 & EMA5 it was thought that the attached white cylindrical device on the back end of the EMA6 was a simple rotary positional timing commutator device. According to patent 4,595,975 a commutator like device was included in the schematic diagram. It appeared to be some kind of mechanical rotary switch that controls timed pulses of power to flow through the anodes of the CSET. So when the patent and the photos are examined together the arrangement seems plausible.

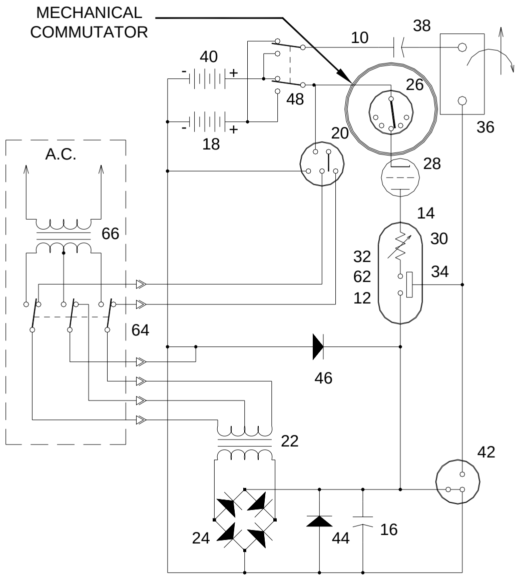

THE GRAY CIRCUIT PER PATENT 4,595,975
JUNE 17, 1986

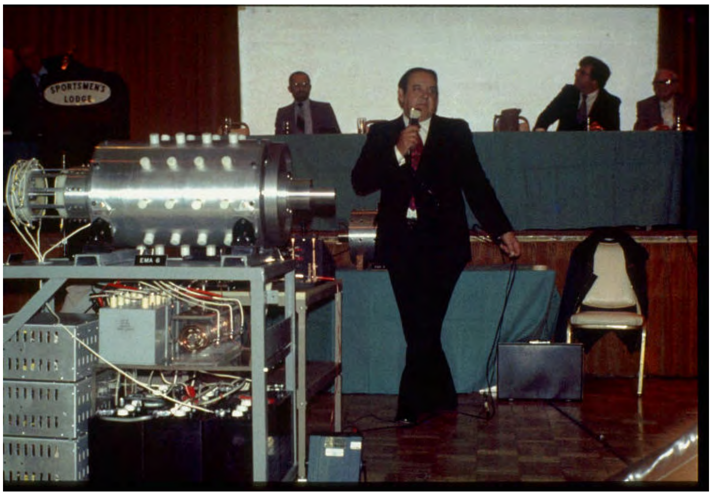

The EMA6 – with Control Commutator on extreme Left Stripped down EMA4 motor on back table

As it turns out the EMA4 and EMA5 motors revealed a much more complex component for researchers to consider. These commutators were constructed in such a way that they contained way more contacts than what would be needed for simple positional feedback. The units that came with each motor were designed to be pretty much the same, however they were wired differently. More control wires were utilized with the EMA5 than with the EMA4. This would be consistent with the fact the EMA4 only had one electromagnet pair to pulse while the EMA5 had three. The EMA5 commutator used 9 of its 15 contacts and was connected with 7 control wires. The EMA4 commutator also used 9 of its contacts but was only connected with 3 control wires.

EMA4 and EMA5 Motors at the time of recovery in 2000
With external Control Commutators mounted on the right

An examination for wear on the commutator contact surfaces, from possible arcing and heating, showed almost no signs of degradation. The conclusion reached from this observation was that whatever energy passed through these devices must have been at a very low level. This being at least two or three orders of magnitude less than what would be needed to pulse all the stator and rotor coils at once. Estimated classical current levels of less than 1 mA at 200 Volts have been proposed as being an upper limit. Mr. Wooten examined these motors from a mechanical point of view, using his professional expertise, and reported that each motor appeared to have logged at least several hundred hours of operation. Yet, you would never conclude that much use by looking at the contact surfaces alone. It is possible that the commutators may have been replaced, prior to being taken out of service, but that is a long shot.

Norman Wooten displaying the Non-Disclosed Complexities of the Timing Commutator from the EMA5 Gray motor at the 2001 KeelyNet Conference[5] – Courtesy Dr. Peter Lindemann

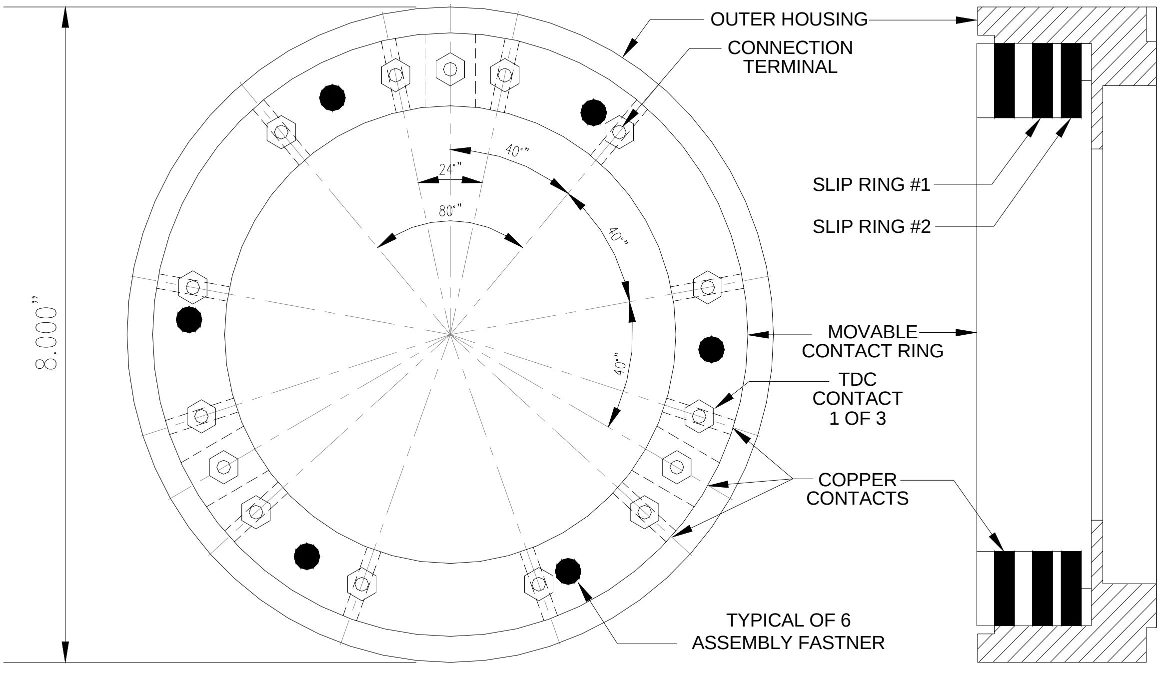

EMA4 CONTROL COMMUTATOR

Observing the lack of wear, the new belief is that the commutators were providing both control timing and positional signals to Mr. Gray's energy converter. They were defiantly not directly switching the prime power that went to the stator and rotor coils. Further more, these timing signals were more complex than ever thought. In the recovered motors the commutator section and the motor electromagnets were wired independently.

Observing the lack of wear, the new belief is that the commutators were providing both control timing and positional signals to Mr. Gray's energy converter. They were defiantly not directly switching the prime power that went to the stator and rotor coils. Further more, these timing signals were more complex than ever thought. In the recovered motors the commutator section and the motor electromagnets were wired independently.

There are 15 contacts and two independent aluminum slip rings in each commutator subassembly. Three of these contacts are rectangular (1/4" x ¾") copper bars that are three times wider than the remaining ¼" diameter copper rod contacts. For both motors there appears to be two general timing patterns that emerge when looking at the angular spacing relationships of these contacts.

1.) The three large rectangular contacts and 6 of the smaller contacts are equally spaced 40° apart from each other around the circumference of the mounting ring. These would provide a continuous evenly spaced train set of short timing pulses, proportional to the speed of the motor, with every third pulse having three times the pulse width of the others. But, this is not what has been wired to go to the energy converter.

2.) There is also a repeated pattern with three clustered contacts. This group is composed of two small and the one large contact. These seem to be related to the "firing" of the electromagnets when the wiper is about 6° past TDC.

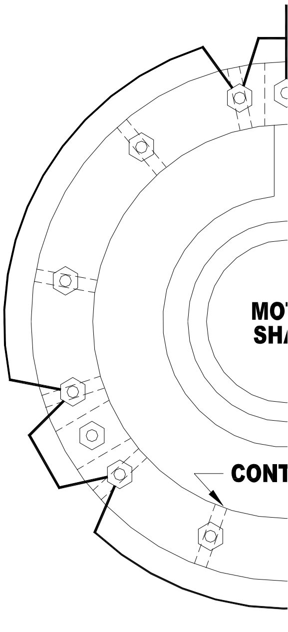

EMA4 COMMNETA

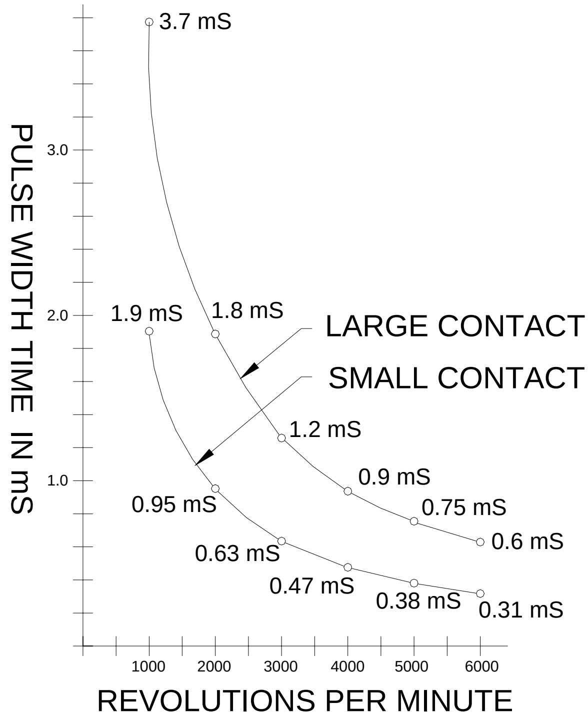

EMA4 COMMENTATOR
EQUILIVANT CIRCUIT

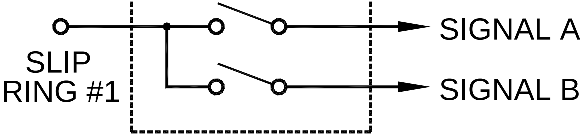

EMA5 COMMENTATOR
EQUILIVANT CIRCUIT

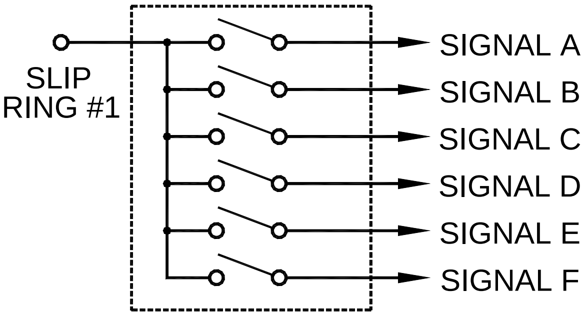

The rotary aluminum shaft wiper houses a spring loaded metallic "brush" that connects each contact to the slip ring in a sequential order. A second aluminum slip ring was installed, but was not utilized in the EMA4. If the slip ring were considered a circuit common then the timing pattern shown in Diagram 01 would be the result. Again not all of the contacts were used in either motor. This is indeed puzzling. Apparently different circuit configurations were being planned that might have used all these contacts.

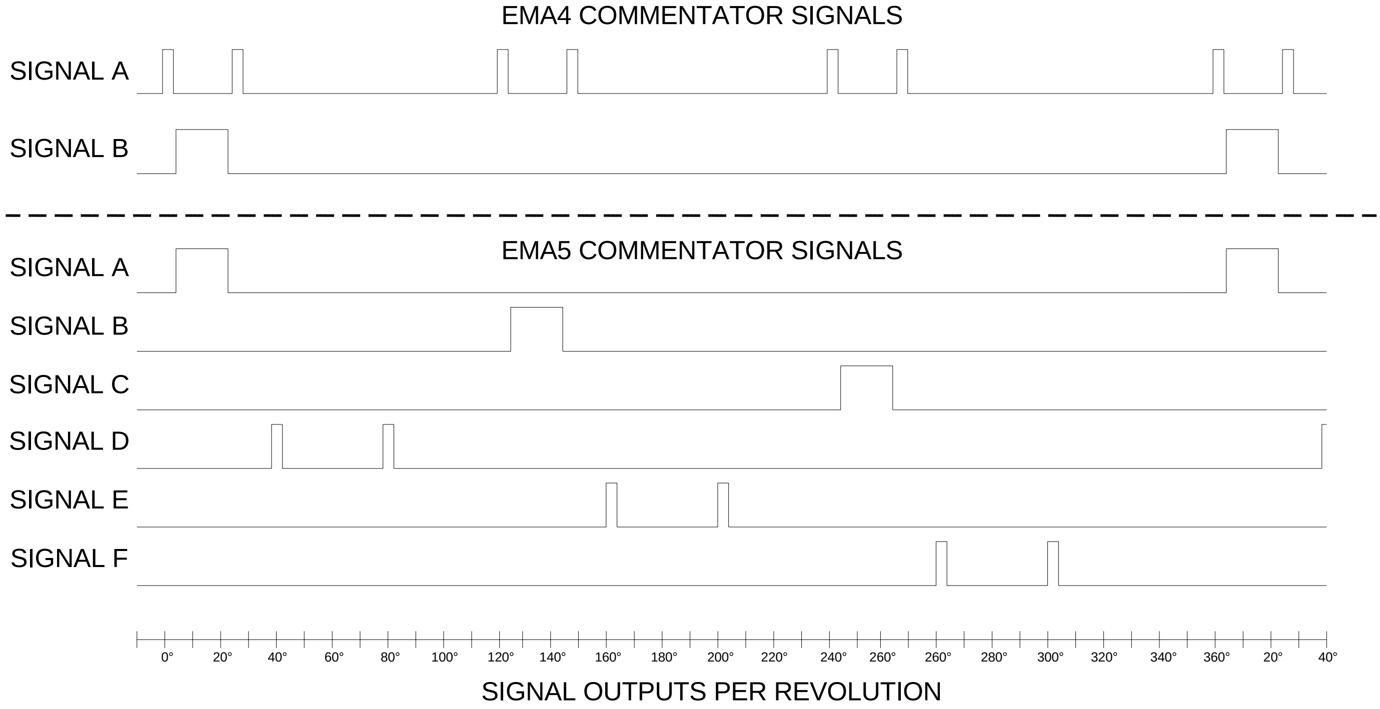

Timing Diagram 01 for Control Commutators for the EMA4 and EMA5 EV Gray Motors

Mr. Gray used a construction technique that is not generally seen in rotary equipment. There are three slip ring assemblies used in each of these two motors. One assembly is used in the commutator subassembly and has two slip rings sharing a common wiper. The other two slip ring assemblies are used to conduct pulse power through the rotor electromagnets. One is in front and the other is in the back of the motor. All three of these slip ring assemblies have an uncommon internal design. This is because the wiper and “brush” are rotating around the inside of a stationary slip ring. This is just the opposite to 98% of all other industrial machines in the world that use slip rings. Almost always, the slip rings are attached to the rotating shaft and the contacts or “brushes” are stationary. The obvious advantage of this common approach is that it allows the brushes to be easily replaced when they wear down. Another important advantage is that the “brushes” can easily accommodate some imperfections in the roundness of the slip rings that rub against them. This is because the brushes are mounted in spring loaded holders that allow them to move back and fourth. However, in Mr. Gray’s design, a brush or wiper replacement would require way more disassembly. Also, it doesn’t appear that this design could allow for nearly as much deviation from tolerance as the standard brush and slip ring arrangement can. We just don’t know what the application specific reason was that promoted this kind of solution; it certainly is not obvious from looking at the motors alone. Mr. Wooten contends that he could have designed a much better system to get the power into the rotor as well as several other major mechanical system improvements. So far no one has disputed his claim.

It is interesting to note that the Top Dead Center (TDC), the position where the electromagnets are squarely aligned with each other, takes place when the wiper is on the first small round contact in the cluster of three contacts, rather that the larger rectangular contact. Mr. Gray designated this location as 0°. It has been proposed that a certain amount of angular displacement is needed between opposing electromagnets when operating in the repulsion mode to insure that the generated forces are focused in one direction. Perhaps Mr. Gray determined that the optimum angle, for this size motor, is around 6°. The actual working angular displacement could be adjusted. Perhaps this was just a convenient reference point and had nothing to do with the function of the motor.

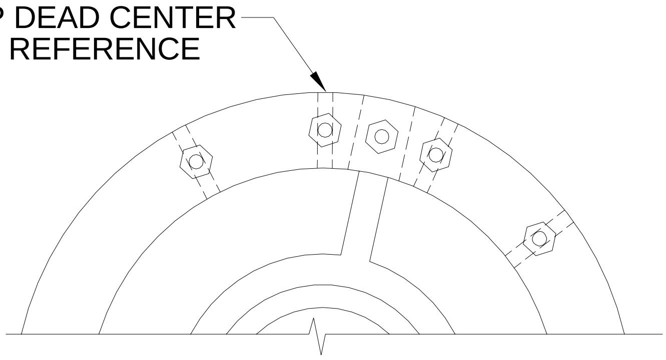

According to the jacket information the control conductors leading off from the commutators are rated at 25KV. Yet, their overall diameter is equivalent to common #14 AWG THHN household wire (.12" diameter). This is much smaller than typical electronic high voltage wire that has this kind of voltage rating. This wire was probably an expensive specialty cable in its time.

The small spacing between the wiper and the contacts in the clusters of three suggests that Mr. Gray didn't utilize any classical control voltages that had a differential greater than 200V. If classical electron flow were involved then voltages higher than this would have caused arcing at both the leading and trailing edges of the contacts as the wiper approached and receded from them. Again arcing was not observed. Then what was the purpose of the expensive high voltage cable? One proposal is that all of the control voltages connected to the commentators were elevated to some high value and their differences was less than 200 volts. This means that the whole commutator was "floating" at some high potential above ground. The overall nylon construction of the commentator assembly suggests that it could have easily have supported this kind of high voltage operation (5KV to 20KV). The commutators on the EMA4, EMA5, and EMA6 are all mounted almost independently and external from the motor proper. This construction feature might imply a need for a high degree of isolation between the motor and the commutator. If so, then it is a distinct possibility that the commutator did operate at some high floating voltage.

The purpose of the various timing signals has been discussed within the Free Energy community but so far no general conclusions have been tendered that would explain how they affected the energy converter's circuit operation.

It appears that the energy converter needed at least two data streams, only a portion of which was the simple positional information. The rest of these short contact closures are assumed to be signals that could prepare the energy converter for its next pulse or to, perhaps, facilitate some kind of energy recovery cycle. There are four contacts between each TDC position; therefore there are provisions for as many as four changes of state per each power pulse. Not all of them were used at the time these motors were taken out of service, but they could have been.

Mr. Wooten, in his 2001 video, claims that the commutator compartments were filled with "Luberplate". This is the trade name for premium quality white lithium machine grease. Given that Mr. Gray didn't seem to spare any expense in the construction of this sub assembly, then what Norm could have observed might have been a special High Voltage Teflon/Silicon insulation compound that is used in the X-Ray business. This would have help to extend the voltage differential of Mr. Gray's control signals to maybe 500 volts or so. However smearing insulation grease (or any kind of grease) on moving electrical contacts is a risky business. This is because it is difficult to build a system that will reliably wipe all the grease off the contacts just prior to contact and still provide a consistent low resistance connection.

Both commutators were built so that the contacts are housed in a movable nylon ring. This ring was installed in a larger hollowed out cylinder that acted as a housing so that the whole collection of 15 contacts could be adjusted together in relation to the shaft position. A machine set screw allowed for a wide range of timing angle adjustments (-40° to +40°). At a setting of -16°, according to notes written on the commutator, the pulse motor would run backwards. Probably not at full torque, but this shows that these motors were reversible.

After the recovery of the EMA4 and EMA5 motors the idea that Mr. Gray's energy converters were dirt simple has come to be questioned. The revised thought is that the Mr. Gray's low energy technology may have been simple, but the higher power technology now appears to be more complex.

EMA4 Rear View

EMA4 Front View

Photos of EMA4 and EMA5 motors are the courtesy of Mr. Norman Wooten via KeelyNet

Note: This document is one in a series produced by Mr. McKay as part of his investigation of the work of Edwin Gray senior and he invites readers to contact him if they have any constructive comments or queries concerning the work of Mr. Gray. Mr McKay's e-mail address is mmckay@tycoint.com

Mark McKay's investigation of Edwin Gray's Technology: Part 4

E. V. Gray Historical Series

Starting with the Start Motor   Mark McKay, PE

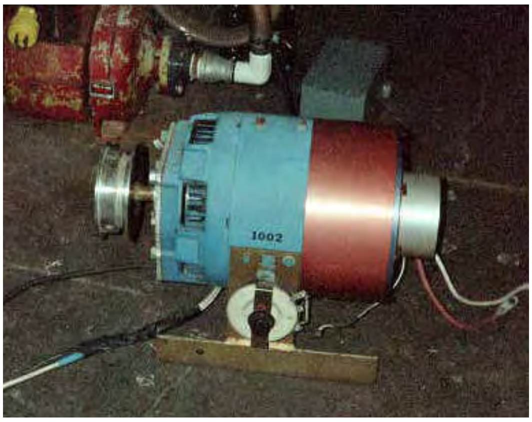

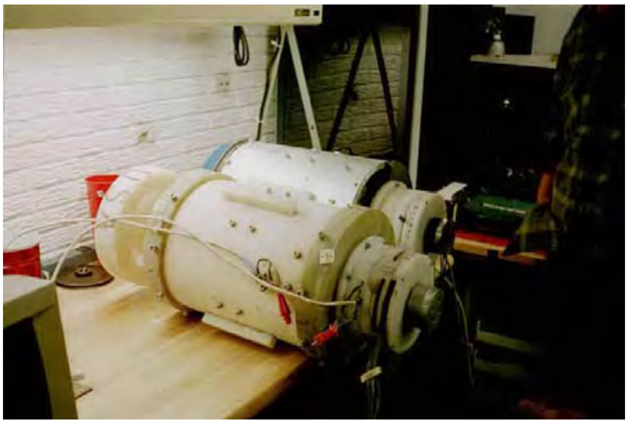

. The Start Motor as Found in 2000

EMA4 and EMA5 Motors as Found in 2000

E. V. Gray once commented to John Bedini that his early free energy experiments were conducted with modified off the shelf industrial motors. It is assumed that when Mr. Gray's finally got adequate funding he went on to build a series of custom made motors that could take better advantage of the unique properties of his non-classical "Cold Electricity". These experimental designs were stamped with the model numbers EMA1 through EMA6. The EMA4-E2 and the EMA6 are his most well know constructions and are always associated with Mr. Gray's work. However, there were other transitional models built.

There may be one recovered example of a pre-EMA series motor that might have served as a functional test bed and very possibly an early investor demonstration model (circa 1963 to 1969).

In 2000 friends of Norm Wooten discovered two original EV Gray motors in a shop somewhere in Texas (most likely Grande Prairie, Texas where Mr. Gray had established a shop in 1986). These were the EMA4 and the EMA5 prototypes. Mr. Wooten acquired these pieces of history from the building land lord. He then took them to his shop where they were carefully disassembled. Later he produced a highly recommended video of his observations for the 2001 Keely conference in Florida. This informative tape is available from Clear-Tech at http://www.free-energy.cc/index.html in DVD and VHS formats. At the time the "Start Motor" was considered insignificant and therefore not looked at very closely.

After considerable mechanical analysis of the EMA4 and EMA5, Mr. Wooten came to the conclusion that this equipment contained no obvious free energy secrets. The vital energy converters that had powered these unique motors were not found. A few years later he decided to sell this collection.

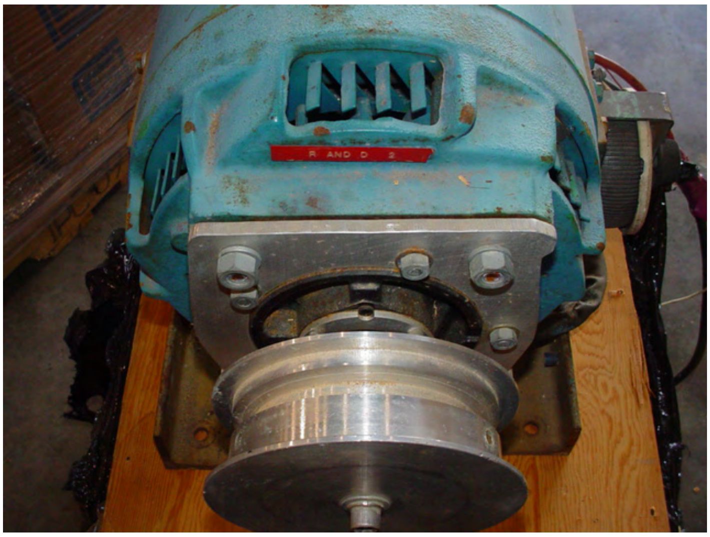

Mr. Allan Francoeur of Penticton, BC, a long time free energy researcher and inventor, bought the entire lot for $5,000 US in 2003. This package included the two prototype evaluation motors (EMA4 and EMA5), one of Mr. Gray's advanced coil popping setups (partial), and an 1940's modified non descript industrial motor. It was assumed, at the time, that this humble looking machine was a high voltage (5KV) generator used by Mr. Gray to charge up his storage capacitors for motor experiments. Later it was proposed that it was a DC motor used to start up Mr. Gray's large experimental motors, thus it finally became known as simply the "Start Motor". The Start Motor could also have been thought to be a dyno-motor. In this capacity it could have acted as a dynamic load to evaluate the performance of Mr. Gray's energy converters.

Custom Adapter Flange Added to Front of Motor

For a number of reasons this author contends that this piece of equipment was an actual working EV Gray pulse motor prior to the construction of the custom EMA models

Showmanship Tells All

Mr. Gray spent some serious money to have this simple motor dressed up way beyond any practical bench top need. If he wanted to conceal the details of its internal wiring from the occasional investor visit, then some heavy gauge sheet metal would have been a cost effective solution. Yet, this "Start Motor" was outfitted with a custom built three piece three color (Red, White, and Blue) anodized aluminum cowling set. The large red section was outfitted with a dozen small machined ventilation slots. These three pieces of non-functional eye candy probably cost him 50 times what the motor was worth, but may have been thought important enough, at the time, to help advance his early business development efforts.

As it turns out, the Start Motor is not a motor but a 5 KW DC exciter generator, circa 1940, used to provide field coil power for a larger generator (75KW to 150 KW). The 4-pole salient stator is outfitted with dual field coils that function in a compound wound configuration. It also has an independent set of slip rings that are connected to the armature coils and thus allow for external regulation. It looks odd, when compared to modern generators, because it has a commutator, like a DC motor, plus two additional slip rings like an AC motor. With the advent of solid state power rectifiers the slip rings and commutator bars in small generators have been completely eliminated, so you seldom (if ever) see this kind of construction. Externally mounted exciters have also been eliminated from the larger generator sets as well for much the same reasons. This same design was also called a "Three Wire Generator". These were used in the 20's to provide unbalanced three wire DC power for combination motor and lighting loads.

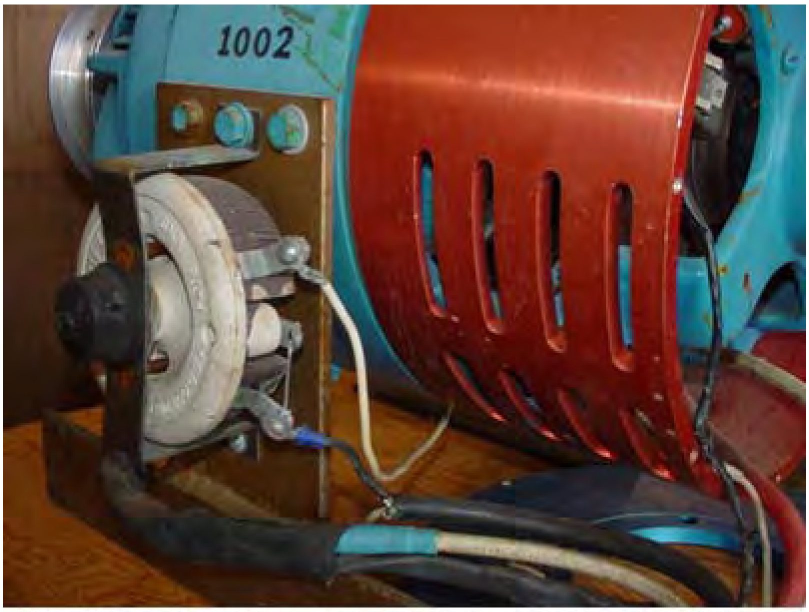

Side Mounted 200 Watt 2 Ohm Rheostat and Attached Cabling

Modification Details

Mr. Gray did a custom retro-fit to the front end of this motor. This modification was intended to be an adapter plate that would allow different flange mounted gear boxes to be attached. He also installed a simple magnetic probe in between two of the stator coils. The Start Motor was also reconfigured to receive its power through a #4 AWG cable (see the discussion about the cable used for the EMA4). There is a 2 Ohm 100 watt rheostat attached to the Start Motor's side that has one #14 AWG cable going to one slip ring and the other going elsewhere (not connected). The return large red cable (ground?) was connected directly to the generator frame once it got inside the case. Having prime power travel through the frame of a generator or motor is defiantly not a traditional electrical practice. Except for the rewiring of the stator coils, the probe, and the cowling the rest of the motor appears to be "stock". There were two suppressor capacitors associated with the slip rings that are similar to 50's automotive distributor condensers. These seemed to be original equipment and had not been replaced. One of the slip ring brushes appears to have been replaced once.

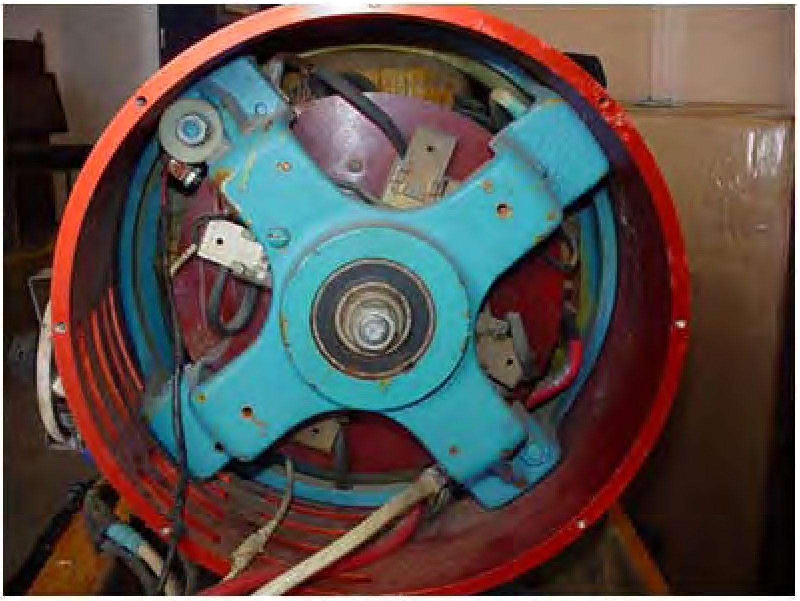

Back End View of the "Start Motor"

The recovery and simple analysis of the Start Motor only reinforces what has already been suspected about Mr. Gray's technology:

1.) There is no obvious over-unity process to be found in this rotary converter. (But that doesn't mean there are none)

2.) This device was designed to have all the stator and rotor coils pulsed at once. This is an operational feature that appears common in Mr. Gray's motor systems.

3.) Applied Voltage considerations: The effective classical voltage potential of the energy that passed through this device certainly did not exceed 600 volts and most likely did not get beyond 300 volts. Had Mr. Gray exceeded these parameters, given the age of these exciter generators windings, he would have risked an insulation failure. The typical classical operation of an exciter generator like this was typically 120 VDC at 50 Amps.

Interesting Thoughts:

Why was Mr. Gray still hanging on to this early prototype demonstration motor (for some 15 years) in the first place? Technically, it would appear that it was a relic from his development past, when compared to the advanced EMA4 and EMA5 evaluation motors. He certainly paid good money to have this equipment shipped from his Van Nuys, CA shop to Texas, so it must have been of some value. The "Start Motor" weighs about 75 lbs. The best speculation to date is that Mr. Gray was probably saving his more important milestone pieces of equipment for a future exhibit in some national technical museum. If this is partially true then the importance of the "Start Motor" should not be over looked.

The schematic for the "Start Motor" below is the author's best attempt, with out disassembling the motor completely, to show the modified internal wiring.

Added Magnetic Probe Next to Stator Winding
Assumed Used for Positional Feedback

Al Francoeur has taken very good care of this earliest surviving example of Mr. Gray's technology. It has been repaired, lubricated, cleaned up and now sports a new paint job. All that is needed is a reproduction EV Gray pulse energy converter to bring the "Start Motor" back to life.

If a breakthrough is ever re-discovered that unlocks the secrets of the methods used to create "Cold Electricity" then this modified exciter motor could well end up as a featured exhibit in the Smithsonian. This could have been what Mr. Gray intended all along.

Backend of the "Start Motor"

View of Compound Stator Coil and Slip Rings

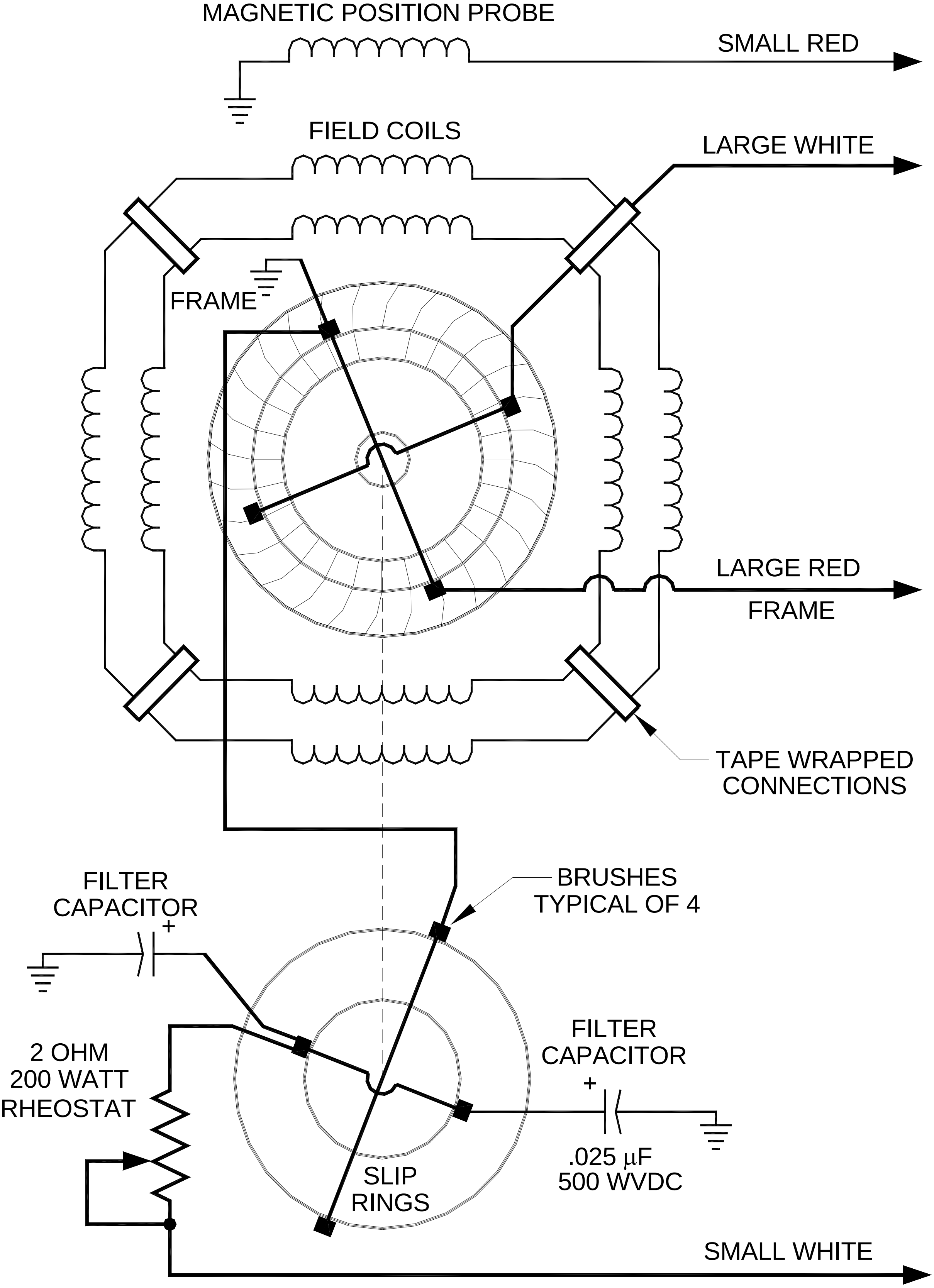

EV GRAY "START MOTOR" SCHEMATIC
(PARTIAL)

Mark McKay's investigation of Edwin Gray's Technology: Part 5

A Compilation of e-mail correspondence from Mr. Tad Johnson and other fellow researches concerning experiments with the “ED Gray” energy conversion device

From: Tad Johnson <h2opowered@c...>
Subject: ERE Produced by Accident **Date:** Thu Feb 13, 2003 2:18 pm

(Tad Johnson) Have a look at the bottom of the page explaining the "problems" Jochen has found when firing this 300KV Marx generator. Looks to be what we are after since he cannot seem to eliminate it through grounding and other means. Also look at the total conduction times (64uS) with rise and fall times substantially lower possibly in the 5-10uS range.

http://www.kronjaeger.com/hv/hv/pro/marx/index.html

“The discharge seems to induce huge voltage transients in ground and/or mains leads. This has resulted in a burnt mains switch and a destroyed ground fault interrupter. Grounding the Marx generator separately and decoupling the charging voltage ground with a resistor helps somewhat. This may turn out to be a major problem, as the Marx generator naturally produces a huge voltage step with a rise-time probably in the microsecond range, and the subsequent discharge produces a similarly steep current pulse which might be kA or more.”

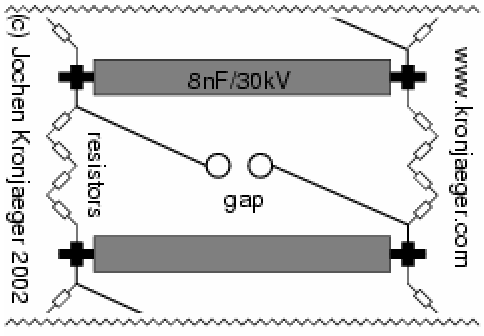

© 2000-2002 Jochen Kronjaeger
hv@Kronjaeger.com
Last modified: 2002-09-08 15:41:04

(Tim Martin) Do you have a plan to allow for easily adjusting the frequency of the impulses? I think it will be important to precisely tune the device so as to discern specific effects.

(Tad Johnson) The frequency is adjustable to a degree through adjustment of the spark gap distance and cap size. The caps I am using are 500pF so frequency should be in the KHz range depending on how much amperage the power supply is charging the stack with. Just got the HV resistors today. All I have left to do is build the CSET and figure out the charging circuit. Hydrogen or magnetically quenched gap on the output might be added later for even higher frequency and more protection against current reversals.

Subject: folder added Hi folks, **Date:** Sat Feb 15, 2003 11:52 am

(Jani V.) I thought you might like to see my version on Ed Gray’s circuit In folder "romisrom" I just created, are some pictures of it, I will add complete schematic with component data as soon as I'm able to draw it...

Tad, I hope from picture "convtube" you will find some hints for your CSET. -Jani-

Subject: CSET design **Date:** Sun Feb 16, 2003 8:28 pm

(Tad Johnson) Thanks for the info. I was going to built it similarly although I was going to use 1.250" acrylic I have already to center the copper pipe. I have some new info on my power supply I will post soon. Looks like the rise time will be ~10nS with a pulse width of 50uS and a fall time of 40uS without a tailbiter circuit or resistive load of about .1Ohm to sharpen the fall time. I may add this later. Frequency should be about 25Khz as is.

Subject: Tesla/Gray device update **Date:** Thu Feb 27, 2003 7:08 pm

(Tad Johnson) My Gray device is now operational although I have foolishly fried a couple of neon sign transformers in the process of trying to loop the collection grid energy back to the power supply without some form of isolation circuitry. It appears I am now at the point that Gary Magratten was when trying to deal with a large pulse of energy and then measure it. Current circuit parameters are:

2000VAC @ 19.2Khz @ 20mA into a 12KV/40mA/100nS full wave bridge into a 2 stage marx generator using 400pF/ 30KV ceramic "doorknob" caps into a magnetically quenched spark gap using needle points of brass into the CSET of stainless steel balls on threaded brass rods. Collection grid is 316 stainless 2" diameter tube.

Total output pulse is 54uS wide with ~10nS rise and ~42nS fall.

I am thinking of running the output energy in the secondary of a 3KV microwave transformer to power a lower voltage load although I am not sure how the transformer secondary will handle
this input, especially considering the frequency. Another option would be to increase cap size on the marx generator portion of the circuit to lower the frequency to something around 60-120Hz and then use it in a more conventional form.

Pictures and schematics to come soon. Any ideas are much appreciated.

Tad

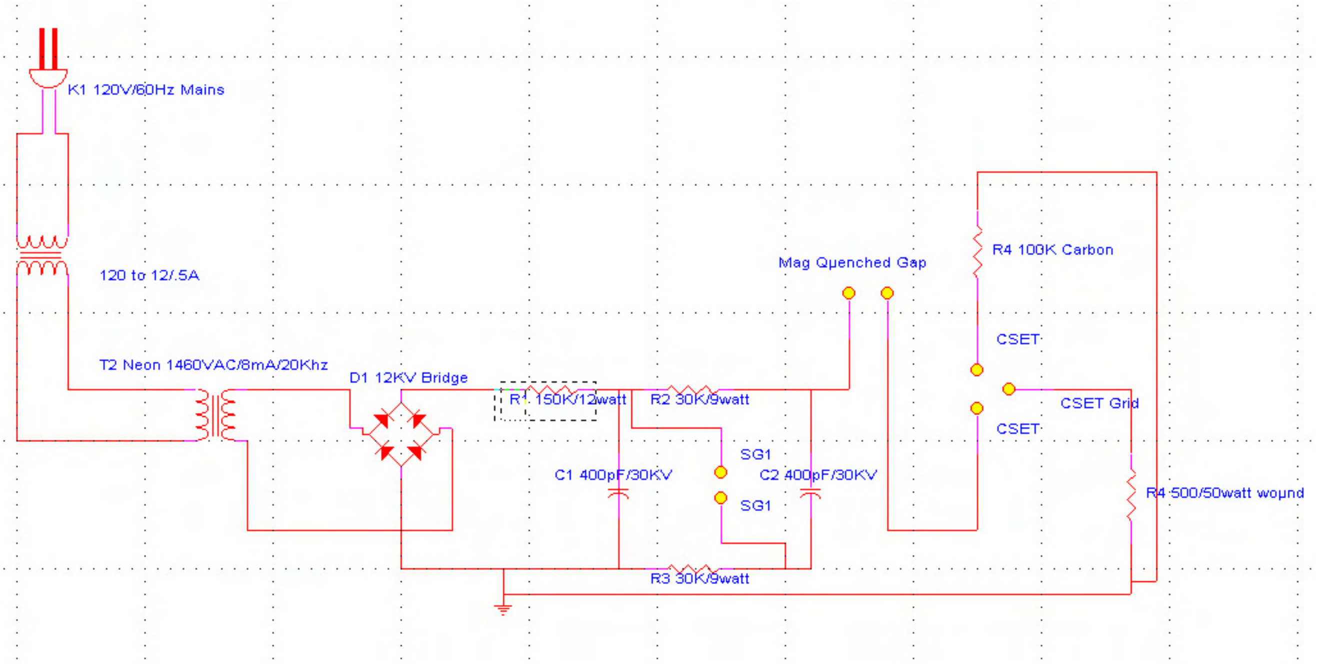
K1 120V/60Hz Mains
120 to 12/.5A
T2 Neon 1460VAC/8mA/20Khz
D1 12KV Bridge
R1 150K/12watt
R2 30K/9watt
C1 400pF/30KV
SG1
SG1
C2 400pF/30KV
R3 30K/9watt
Mag Quenched Gap
R4 100K Carbon
CSET
CSET
CSET Grid
R4 500/50watt wound

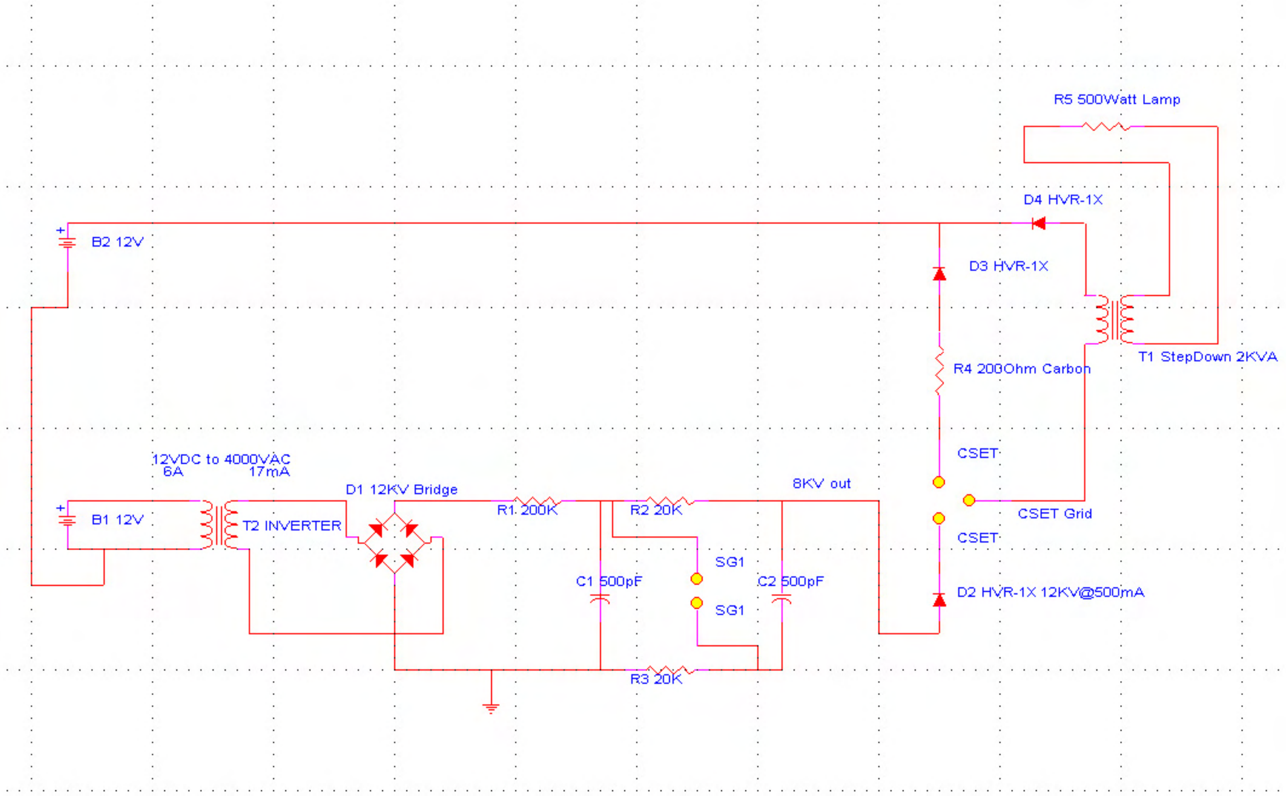

Date: Fri Feb 28, 2003 8:25 pm

(Tim Martin) I have a few questions.

Is it possible to safely measure the voltage and frequency of the CSET output?

(Tad Johnson) Yes, I got the data below by making a 50Megaohm resistor to measure it, although I am reluctant to hook up the 3500 dollar scope to it as of yet. I get more guts to do so after I check the warranty info on it. All data thus far was taken on a true RMS LCR meter.
What is the AC current draw of the neon sign transformer? (Tim Martin)

Should be 1.5 Amp per the specs. But I will check it with my true RMS power-meter(5amp max on the meter).

(Tim Martin) Would it be possible to dump the CSET output into a large lead acid storage battery?

(Tad Johnson) Yes, although I am told it will "cold boil" at that voltage. Seems to be hard on the battery but I don't have much knowledge on it. I would like to step the voltage down before connecting it to the battery to avoid premature failure.

(Tim Martin) Would the neon sign transformer work properly if connected to a small >DC/AC inverter on the 12 volt battery?

(Tad Johnson) Should.

Subject: Gray Circuit Images **Date:** Sat Mar 1, 2003 10:19 pm

(Tad Johnson) New images uploaded showing the Gray circuit running after being tuned. Having issues with long runs because the resistors are not rated for more than 10watt on the Marx generator, they start to get a bit hot. Images show a 120VAC/60HZ/1.5A neon transformer powering it since my two other 12VDC inverters were smoked due to bad judgment. No connection to the CSET grid was present during this test run since I was mostly tuning the Marx stack to the 120V neon supply. Frequency was .5-1Khz on this test.

New power supply got here today so I will try the 12VDC version charging the Marx stack at higher frequencies (20Khz).

Flash on the camera makes it hard to see arc across gaps, but it is there.

Total cost of the entire device is now about $145 American dollars.

Subject: Re: [ElectroRadiantResearch] Re: Gray Circuit Images **Date:** Sun Mar 2, 2003 4:36 pm

(Tim Martin) I noticed in your pictures that you do not have a large high voltage air core as Gray and Magratten used in their circuits. Is this un-necessary?

(Tad Johnson) I am told the air core was a step down to run 120VAC/60HZ lamps and other resistive loads since resistive loads don't care about frequency. I haven't built an air core step down yet, but I might if I can't get a motor built soon.

(Tim Martin) Also, what did you say the clear "Plexiglas" material is? Real Plexiglas(tm) in those dimensions is fairly costly.

(Tad Johnson) Acrylic. Resists about 50KV in that dimension 1-1/8" thick. Very inexpensive. 1.5'X 1.5X square is 20 dollars. I used about half of one.

Subject: Grid Energy **Date:** Sun Mar 2, 2003 11:02 pm

(Tad Johnson) Interesting findings after running the Gray circuit for a couple hours:

ERE does NOT manifest if there is no resistor on the spark gap end of the CSET. Repeat ZERO POWER if no resistor in place. The more resistance, the more the effect appears to manifest.

With 300 Ohm or more of resistance the grid starts to put off a FRIGHTENING amount of power. Enough to smoke a 50watt, 500 ohm resistor in less than 30 seconds. My input was 12 watts
total from the wall. Output from the CSET grid is UNMEASURABLE. Grounding is also becoming an issue since I cannot run the end of the CSET back to ground with a resistor in between. Also,
the energy coming off the grid appears to be harmful even with fast rise and fall times contrary to other information out there.

Anyone have any bright ideas on measuring this high amperage, high voltage energy I would be very happy. We need accurate wattage out at this point. I feel confident already with my input measurements.

Subject: Re: [ElectroRadiantResearch] Re: Grid Energy **Date:** Mon Mar 3, 2003 11:05 am

(Tim Martin) It sounds as though Lindemann was correct in saying that one of the problems Gray had was dealing with the abundance of power.

(Tad Johnson) Yes, but we will see how much power. This is what I am after. If it is possible for a small 12 watt power supply to see a gain of at least twice that, then making the circuit for the application I am interested in will be easy (small motive power, scooter, etc.).

(Tim Martin) Do you think the CSET output is behaving different than "normal" electricity? What I am curious about is your statement regarding additional resistance increasing the effect.

(Tad Johnson) It appears as though there MUST be resistance at the end of the CSET in order for the CSET grid to make power. this appears to be the "bunching up" effect Lindemann was talking about, and that Tesla had experienced. It may be that when this HV pulse hits the resistance is like it hits a brick wall and explodes outward into the grid (path of least resistance).

(Tim Martin) Also, I believe that the frequency will govern whether or not the effect is harmful. Be careful!

(Tad Johnson) I'm being as careful as I can, but I have already had one small incident.

(Tim Martin) Another thing you might try is placing a normal 100 watt incandescent bulb on the output of the CSET without closing the circuit. Single wire power transmission is a related phenomenon.

(Tad Johnson) Yes, this works with a neon bulb, I've already run neon bulbs off the grid energy. they glow beautifully to full brightness.

Subject: Fwd: Re: [alfenergy] Grid Energy **Date:** Sun Mar 2, 2003 11:35 pm

(Willard)I can suggest putting a string of light bulbs together in series as a load. 5 bulbs of 100 watts each for instance.

(Tad Johnson) I will try that although I really need to somehow get an amp meter on it
and the scope. I had to drop the voltage down from 2920 to 1460 just so I could lessen the effect enough to work with the components I am using without it destroying them. Meter overloads when trying to measure grid voltage on the doubled setting from the Marx generator.
I am using a 100Megaohm, 100watt HV probe which should be more than sufficient for these voltages. Very strange.

Subject: Re: [alfenergy] magnetic quenched gap **Date:** Tue Mar 4, 2003 11:35 am

(Peer) The magnetic quenched gap is necessary to prevent continuously arcing. Is this right?

(Tad Johnson) No, it helps quench the arc, and bring the fall times back to something more normal. The waveform as per calculations is ~10nS rise, 50uS wide, with a long fall time, this is how Marx generators work. To bring the fall time back into ~20nS range we need to clip the end of the pulse. You can do this by killing the arc prematurely or you can put a low resistance load on the output of the spark gap (tail-biter circuit), or you can do both. My goal was ~10nS rise, 20uS pulse, ~20nS fall, with a pause of 500uS between pulses.

Subject: Re: [alfenergy] for Tad **Date:** Wed Mar 5, 2003 11:44 am

(Unknown Member) I'm trying to rebuild your circuit in order to better understand the working of the CSET. The original circuit built by Gray himself had a powerful input. Heavy batteries were used to power the circuit. You only use a small current und a much higher resistor at the CSET.

(Tad Johnson) Yes, my idea is to keep the power usage as low as possible but still see
the effect. And I have truly seen it with a 9-12 watt power supply, so it IS there. I am now lighting neon bulbs from the grid energy alone, this should not be possible since it would mean an energy gain of at least 100%, or an additional 9 watts to make a total of 18watts for the entire circuit.

http://www.amazing1.com/voltage.htm

At the bottom of the page you will see the power supply I am currently using
(MINIMAX2)

ATTENTION! High Voltage Experimenters
High Voltage Transformers

Low cost thumb sized modules may be battery powered and used for experimental research in: Plasma Guns, Shock Wands, Anti-Gravity, Hovercraft, Tesla Coils, Ion Guns, Force Fields, Electrical Pyrotechnics, Stun Guns, Etc..

MINIMAX5 - 7000 Volt With IOG9 Plans..............................**$29.95**
MINIMAX4 - 4000 Volt With IOG9 Plans..............................**$19.95**
MINIMAX3 - 3000 Volt With IOG9 Plans..............................**$17.95**
MINIMAX2 - 2000 Volt With IOG9 Plans..............................**$14.95**
MINIMAX1 - 1000 Volt...**$9.95**

Bag of five 2 to 3000 volt units-some requiring minor repair, others more.
MINIBAG1 - Includes Basic Schematic..............................**$19.95**

(Unknown Member) I try to copy your circuit, using a medium size 6,5kV HeNe-LASER supply.
The output (grid-power) I get, is however tiny small.

(Tad Johnson) That's fine, my supply I use now is only 1460V @ 8mA!! But this voltage is doubled in the Marx generator. The Marx generator is used instead of the large capacitor and vacuum tube switch in the Gray patents. This eliminates the need for expensive and complicated switching techniques since the Marx generator switches on in less than 50nS and off in that same amount of time unless you are running larger capacitors. 400pF caps @ 1460V @ 8mA gives me 500HZ. But 1900pF in that same supply only gives me about 1-2HZ, but much higher amperage pulse when the gap fires. If more amperage in the power supply (like 20mA) then this rate would obviously be much higher and much more controllable.

http://home.earthlink.net/~jimlux/hv/marx.htm [Appendix 1]

http://members.tm.net/lapointe/MarxMain.html [Appendix 2]

http://www.kronjaeger.com/hv/hv/src/marx/index.html [Appendix 3]

(Tad Johnson) The capacitors come from:

http://www.alltronics.com/capacito.htm

The 400pF 30KV ones are US $12.50 each. The 6.5KV 1500pF are 99 cents each. The cheaper ones work just as well if not better! If you really want a big power pulse buy the 14uF, 20KV, 2800 joule cap!

CERAMIC HI-VOLTAGE TRANSMITTING CAP
400pF @ 30KV, TC N4700. Made by TDK.
20P007 $12.50

SANGAMO ENERGY DISCHARGE CAPACITOR

14 uF 20KV 2800 Joule 14" x 8" x 24" --- Mineral oil filled

20P002 $250.00

(Unknown Member) Maybe there is a secret I have not seen yet. My CSET is not a pipe, but a round cage made by copper wire soldered together. If a measurable radiant energy is made, this one I guess should be noticed by the small CSET grid I have.

(Tad Johnson)You WILL see energy on that grid regardless of it's design. I am using a stainless tube, but any copper, aluminum or anything else should work also. Multiple layers of different metals (copper inside, aluminum outside should increase power as well).Also, move the CSET spark gap into the tube like Skip said. I should have done this as well, but I was lazy. This should maximize the energy on the grid. Use a couple neon lamps to run off the grid. 220VAC @ 10mA is what my bulbs are, I use two in series and they light up to full brightness off the grid energy alone. One lead to grid, one to ground. They light to half brightness just touching the grid and not grounded. I am trying to figure out what I was doing when I ran the 50watt resistor across the grid output in order to get it as hot as it was getting. This circuit grid output varies greatly depending on how it is tuned so there are many things to test still.

I really want to try a flyback supply soon though.

http://www.electronicsic.com/fly.htm

(Unknown Member) Maybe my quenched spark gap is not working. How is yours built up?

(Tad Johnson) I used a block of plastic on both sides and used a Forstner bit (1/2") to core a hole in the plastic, then I used glue to glue the ceramic magnet into the hole on both pieces of plastic. Then I used a router to make a slot so I could adjust the magnet distance from the gap electrodes. The magnets TWIST the arc and cut it off early, This gives us a faster fall time.

(Unknown Member) Have you enclosed the R4 inside the CSET tube or outside? Is it a high voltage type or a normal one?

(Tad Johnson) Outside and it is a normal 10K, 3 watt resistor, made by Panasonic, ordered from Digikey. The same resistors are used in the Marx stack. I have also tried a HVR-1X, 12KV/550mA diode (THV512T is new part number). This works well also.

http://www.electronicsic.com/diode.htm

POWER DIODES (Use in MICROWAVE OVEN)

BUY **THV512T** **12KV - 550mA** **$3.20 each**

Replacement For : HVR-1X-3 12KV - 550mA
HVR-1X-4 9KV - 550mA

Other diodes I bought were VG3, VG6 and VG12 from

http://www.amazing1.com/parts.htm

VG22	22KV HV Diode For KILOVOLT MAGNIFIERS	**$3.95**
VG4	3KV HV Diode - Used LGU4, IOG3, etc.	**$1.95**

[Apparently out of Stock on the VG3, VG6, and VG12 on 5/4/03]

Subject: Gray Circuit Modifications **Date:** Wed Mar 5, 2003 11:18 pm

(Tad Johnson) I finished my circuit modifications as per suggestions. I tripled the capacitance in the Marx bank, installed the CSET gap in the center of the collection grid and added a 25nF cap on the output of the CSET grid in line with the load. The lamps glow at least as twice as bright as they did before. But what is really exciting to me was that I was going to work on the Marx gap so I went to short the cap bank. At the instant I shorted this bank of caps I felt the "wave of energy" which actually pushed my shirt in the direction of the blast.

Has anyone else seen this when discharging a cap bank and being of close proximity? Very strange anomaly. Makes me believe that Tesla must have been working with much higher voltage and much higher capacity than this circuit in order to feel this wave constantly at each gap firing. This is obviously what we are looking to reproduce.

Subject: Re: [alfenergy] Magnetic Quenched Gap **Date:** Thu Mar 6, 2003 9:16 am

(Alan Francoeur) I have tested the function of a magnetic quenched gap. I used a Marx generator to create short HV pulses. The spark gap was simple two ends of a copper wire facing each other with a distance of about 2 mm. I used a vice and put a strong Neodymium magnet at each side of the vise jaw. The gap between the two magnets was about 17 mm. (The magnets were attracting each other) the arrangement was so that you could easily remove the vice with magnets without changing the spark gap.

Without magnets an arc occurred many times after a spark and the frequency of the spark was changing all times and there was a small interval without a spark, partially. From that view I can conclude the spark gap without magnet is not so well functioning because of the lower spark frequency and the occurring arcs.

(Tad Johnson) Yes, I have found this myself as well. This is why I like the magnetic gap so much.

(Alan Francoeur) With the magnets, the spark's frequency was higher, and there was no standing arc at all. Each time an arc liked to occur the arc got blown out like a candle in the wind.

When I was connecting a small (8 Watt) neon-bulb between the vice ,which was made of steel and somehow served as grid, and ground the neon-light lit weekly and the ark frequency changed a bit also the ark noise changed! And this although there is no galvanic contact between the Marx generator and the neon-bulb.

(Tad Johnson) I don't understand why frequency changes when you connect a load to the grid, but I have seen this as well.

(Alan Francoeur) But I also measured the current flowing back to ground after the mentioned spark gap. This was done by a 50 Ohm resistor a HV-probe and an oscilloscope.

(Tad Johnson) I am making a new HV probe, 1GOhm will be the size. A bit high, but I have many problems with the 100MOhm one I now use.

(Alan Francoeur) Without magnets: the time duration of the spark could be hardly measured but seemed to be >500 ns.

With magnets: the time duration of the spark was definitely shorter and the picture on the scope was more clear. The time duration was 100 us to 200 ns.

(Tad Johnson) Great! This is what we are after.

(Alan Francoeur) In both cases, you see a positive high voltage pulse that exceeds the capacity of the screen of the scope. Then a small negative pulse, like the half of a sine wave, follows. After that there are fast oscillations. Maybe this picture does not show the true current flow, because of parasitic capacities of the used resistor.

(Tad Johnson) The ringing is what has been messing my frequency counter up I think. I might not be getting the correct frequency of pulses measured. Inductors can be used in place of the resistors to reduce loss, although the output will obviously be different and need to be rectified or sharpened up.

(Alan Francoeur) Another investigation was, that using no magnet, a multi-discharge could occur (many tiny discharges). With magnet there was always one discharge. Maybe you have the same experience.

(Tad Johnson) Yes, exactly. This is why Tesla also used these magnets around the gap. He was trying for a smaller and tighter discharge of energy.

(Alan Francoeur) Tad, have you tried to put magnets inside the gray tube? Therefore you would not need to have a separate spark gap and maybe more power inside the Gray tube.

(Tad Johnson) I have not tried this yet, but I can try it soon.

Subject: Progress **Date:** Thu Mar 13, 2003 10:42 pm

(Tad Johnson) No progress on the Gray circuit this week as I have been working on getting a lathe to make parts and do better quality work so I have not been financially able to buy the HV resistor for measurement nor the Thyratron, or spark tubes.

I pulled my Hydrogen combustion enhancement device out of the shop since fuel prices are getting ridiculous. Car already gets 33mpg, but 38-40 would be better.

I will put pictures of it when I get it running again.

I will be working on the Gray circuit again within a week or two though. Stay tuned,

Subject: Re: [ElectroRadiantResearch] Success ??? **Date:** Fri Mar 21, 2003 9:17 pm

(Jani V.) Last weekend I finally got a chance to test my Ed Gray machine and I think the Electro-Radiant-Event manifested once. When I ran the test, 40 W light bulb flashed before the whole bunch of charge, which was collected to the grids, discharge though the safety spark gap (schematic Test1a, look my folder romisrom). I tried to duplicate the Radiant-Event but it didn't manifest again. I think the interrupter-rotating rod burned somehow because it's resistance raised near two meg-ohms!!! I also have to make the carbon resistor different because it is not very stable, resistance range between 50 - 500 ohms depending temperature. I've also added in the spark-gap a strong NIB magnet to cut arc more faster. I think this magnetically quenched spark is very important to produce ERE. Anyway, test must be done again to make sure that it was ERE that manifest neither some other discharge.......unfortunately my testing is very slow because I live in another place due to my work and my test equipment are another place. So, it may take awhile.

(Tad Johnson) Congratulations!, sounds like a successful test run. You should get constant power off the grid once the circuit is tuned and stabilized. 300 Ohms on the end of the CSET seem to be perfect in my last test run.

Keep up the good work, no matter how slow it goes, it's worth it to humanity.

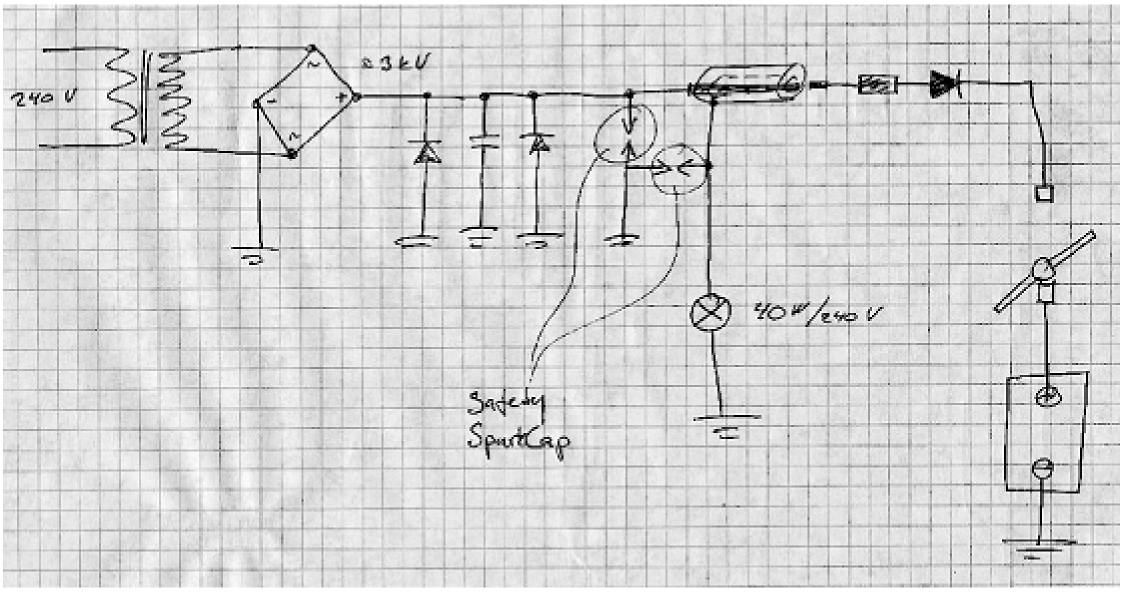

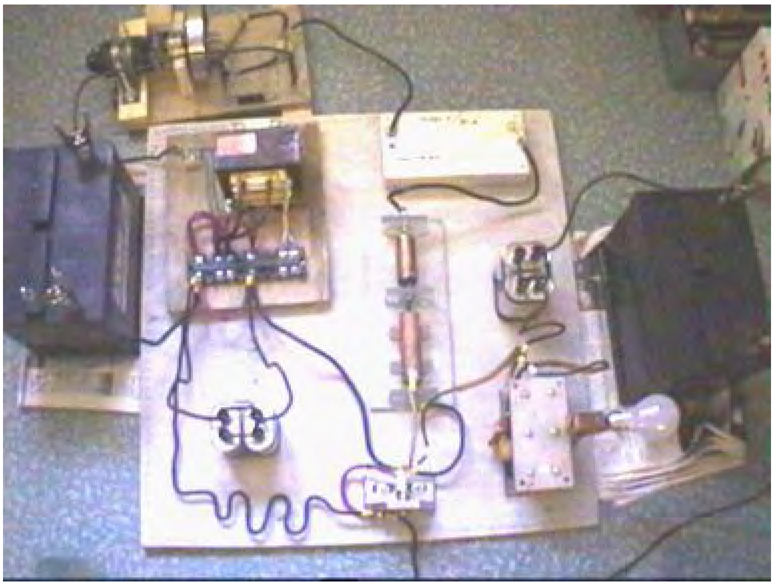

Subject: Progress **Date:** Sun Mar 30, 2003 5:21 pm

Hi folks,

I have not felt like doing much on the Gray device for a couple weeks since I have seen a relationship of mine fall apart after 8 years of being with this woman.

I am excited to see progress being made by Jani and Peer on their circuits and will hopefully find some "drive" to work on my system again soon.

Best wishes,

Tad

Note: This document is one in a series produced by Mr. McKay as part of his investigation of the work of Edwin Gray senior and he invites readers to contact him if they have any constructive comments or queries concerning the work of Mr. Gray. Mr McKay's e-mail address is mmckay@tycoint.com

Mark McKay's investigation of Edwin Gray's Technology: Part 6

Conversation between Mark Gray and Mark McKay on 5/19/07

Mark Gray is E.V. Gray's 6th child born in1958 in southern California. For the past several years he has been a parts-room manager for a school district repair shop which maintains over 200 buses. He is a single parent who currently lives with his three young adult children. (Two daughters and one son).

Mark Gray was employed by his father, E.V. Gray, for the majority of the time between 1979 and early 1988. In this time period, he served in the capacity of a general assistant. He traveled and worked at seven different locations, including a two week long trip to Israel.

Under his father's direction he assisted in the building of the majority of the "Trigger Carts" (The converter systems under the pulse motors) that are displayed in the 1896 ZTEX promotion video. He also assisted in securing parts from custom vendors, video taped the technology, assisted with various demonstrations, drove the company truck, and wrote licensing agreements. These are just a few of the multitude of tasks he did during his tenure of service.

Mark parted on good terms from his father in early 1988 when funding ran out due to differences between E.V. Gray and certain investors, over the control and future of the technology. These differences were heightened when an alleged government contact, interested in a possible R&D program on the switching/triggering aspect of the technology, came into the picture late 1987 – early 1988.

While Mark had a tremendous exposure to his father's later technology (1979-1988), his detailed understanding of the underlying functioning principles is almost gone. He did what he was told to do and was compensated appropriately for his services, but never got deeply involved with the workings of the technology. For the past twenty years Mark has been completely divorced from his father's technology and has forgotten almost everything he knew about it. He regrets not having paid more attention and not having taken a real interest in the "nuts and bolts" of the processes.

Mark was most willing to share these anecdotal technical Tid-Bits that might have a bearing on rediscovering this lost technology.

The Mark I (Converter Switching Element Tube)

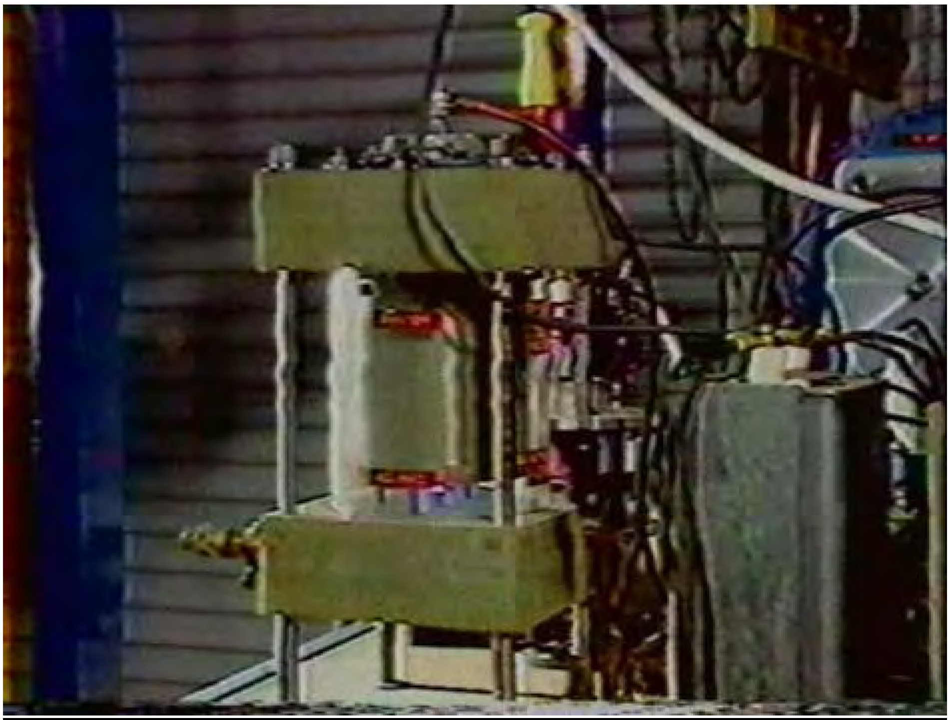

Tthe cylindrical glass enclosure is a Colman gas lantern cover

- COMMENTARY: This really limits the magnitude of the internal pressure of what ever gas may have been present. The size of the end caps could support pressures up to 6000 psi. With such a thin glass envelop anything over 3 psi would be difficult. "He didn't want to pay the high price for a machined enclosure"

- all electrical connections were made from the top

  COMMENTARY: I only see two electrical connections at the top of this device (the black center conductor and the white conductor with the large yellow single pin connector. Therefore the "Grid" is not connected to anything, unless it is connected to one of the electrodes.

- the gap was adjustable

- the internal gas was presumed to be Nitrogen from a welding supply house

  COMMENTARY: Mr. E.V. Gray was very familiar with welding gasses. "He didn't get involved with anything that exotic" (Referring to S6F)

- Purpose of the Grids: "Possibly to cover up something he didn't want people to see?"

  COMMENTARY: Like an additional series component, perhaps an HV RF coil?

- Was there an electrical connection to the "Grids"? "I don't recall"

- "the electrodes were made of Tungsten or Titanium. Which ever material Russia is famous for." [Titanium]

Ignitrons installed on the "Red Motor Cart"

<u>The Mark II "Silver Cylinder" (Ignitron)</u>

- This was an off the shelf commercial device that was a metal cylinder about 2" in diameter and 6" long.

- The terminal insulators were glass

- It was a two terminal device only, with wires connected to the top and the bottom.

- The round flanges were custom made end pieces to secure additional finned aluminum heat sinks that were attached around the periphery.

- The band in the center was a radiator clamp to hold it all together. Sometimes two clamps were used.

- These units did occasionally wear out or fail. New units were stocked on the shelf

● These devices contained Mercury and therefore retired units were treated with respect in storage.

● When these units arced inside you could see a blue flash through the terminal glass.

COMMENTARY: It appears these devices are Class A Ignitrons. They are the right size, right form factor and contain Mercury. However an Ignitron is a three, or more, terminal device. It operates much like a very high current thyratron. If there were no control connections for the igniter, then one use might have been a fixed-distance spark gap and just overvoltaged until it fired. One advantage of this approach would be a clean Mercury surface after each pulse. The pulse rate observed in the 1986 video is on the order of 2 Hz.

It is unclear wither these ignitrons were a replacement for the CSET or components in addition to the CSET. So far, the best explanation supports the idea that the ignitrons replaced the function of the rotating spark gaps that were in the commutator section of E.V. Gray's early motor designs. The 1986 Promotion video will show that E.V. Gray used several of these devices for his motors (up to six per cart). E.V. Gray probably developed a new system where the complexity of the old front end rotary spark gap array was no longer needed, thus greatly reducing the fabrication costs per motor.

Magnet wire for the Popping coils:

●All the wire for the construction of the projectile coils was standard copper magnet wire

●One company was contracted to machine the aluminum or plastic coils forms (Normally Nylon). Another company was hired to wind the coils. "We attempted to wind a few of our own coils. But not many"

Wire used in special places:

"That wire there was the expensive silicone filled wire that had to be used at that connection" pointing to the photo of the battery charger converter and the wires coming off the storage capacitor.

COMMENTARY: In the Cannady Interview it was noted how "Cold Electricity' would destroy the insulation on conductors. Apparently E.V. Gray did find a tentative solution to this problem by using special wire in the locations where it was required.

A Trip to the Capacitor Vendor

Mark Gray recounted an experience he had when he was instructed to return some defective capacitors to a custom supplier in Southern California.

The internal connection between the external capacitor terminal and the internal plates had opened up because the wire gauge was too small, thus causing it to fail. To explore this complaint first hand, the vendor opened up one defective unit with a can opener. Since the connection had been separated at this point there was still a substantial charge still left in the unit. There was an unexpected accidental discharged that caused a loud bang. Apparently the vendor quickly made repair modifications to all of the returned capacitors at no charge. Mark reports that the plates were gray with layers of a white material in between them. The entire unit was filled with a thick clear gel. Mark Gray claims he recalls values of 500 mF at 5 KV.

COMMENTARY: This type of construction implies a low inductance plate capacitor rather that the higher inductance rolled designs. The residual stored charge implies a low loss construction. I don't know about the dielectric, it could have been a standard poly material. Another authority claims E.V. Gray used Mica. I don't know what color mica is when installed in a large capacitor. "Cold electricity" is also known for its loud discharges.

The "Trigger Cart"

Mark Gray claims that the heart and soul of the E.V. Gray technology is the “Trigger Cart”. This is the power supply that was the source of the anomalous energy for all of the projectile demonstrations. What is interesting about this system, is that it operates from 220 V AC, counter to all of E.V. Gray’s previous motors and circuits.

COMMENTARY: Some researchers have proposed that the E.V. Gray technology required the use of wet cell lead-acid batteries for the generation of “Cold Electricity”. Apparently this is not the case with the existence of this cart. However, the overall OU qualities of this technology may be impaired with the use of utility power. But at the time, E.V. Gray was seeking military customers who could benefit from the propulsion features of this equipment.

Trigger Cart Operation: "Slowly crank up the Auto-transformer until the tubes started to fire, then watch the volt meter. When it got to 5,000 volts I would quickly turn down the Auto-transformer and fire the projectile."

COMMENTARY: In the background sound of the demonstration video we hear about 20 pops before the projectile is ready for launch. It seems E.V. Gray was discharging one capacitor into another capacitor. Once this charging operation was complete he would discharge the collected anomalous energy through his opposing coils to launch a projectile. I don't know what he used for a discharge switch.

If Mark Gray was reading an analog voltage meter then we can be pretty sure that the anomalous “Cold electricity”, when stored in a capacitor, can be observed as a positive classical voltage. This is very consistent with Tom Bearden’s description of “Negative Mass Energy” - if the two phenomena are at all related. Earlier photos show E.V. Gray using an analog Triplett 630-A multimeter to measure the voltage of “Black Boxes” that are assumed to be storage capacitors in his early “Popping Coil” demonstrations (1973).

If the Pops we hear (20 or so per launch) are from the four Ignitrons on top of the cart, then it is reasonable to assume that the source DC supply voltage was in excess of 5 KV. If the Ignitrons were connected so that they would self-trigger by connecting the igniter to the anode, then there would be a sudden break-over pulse every time the voltage difference between the anode and cathode reached about 1500 V DC. This would imply that the source supply voltage was at least no lower than 8 KV.

Since there was a concerted effort to turn down the auto-transformer after reaching 5 KV, I would guess that E.V. Gray was charging his custom capacitors right to their design limits.

Auxiliary Capacitors:

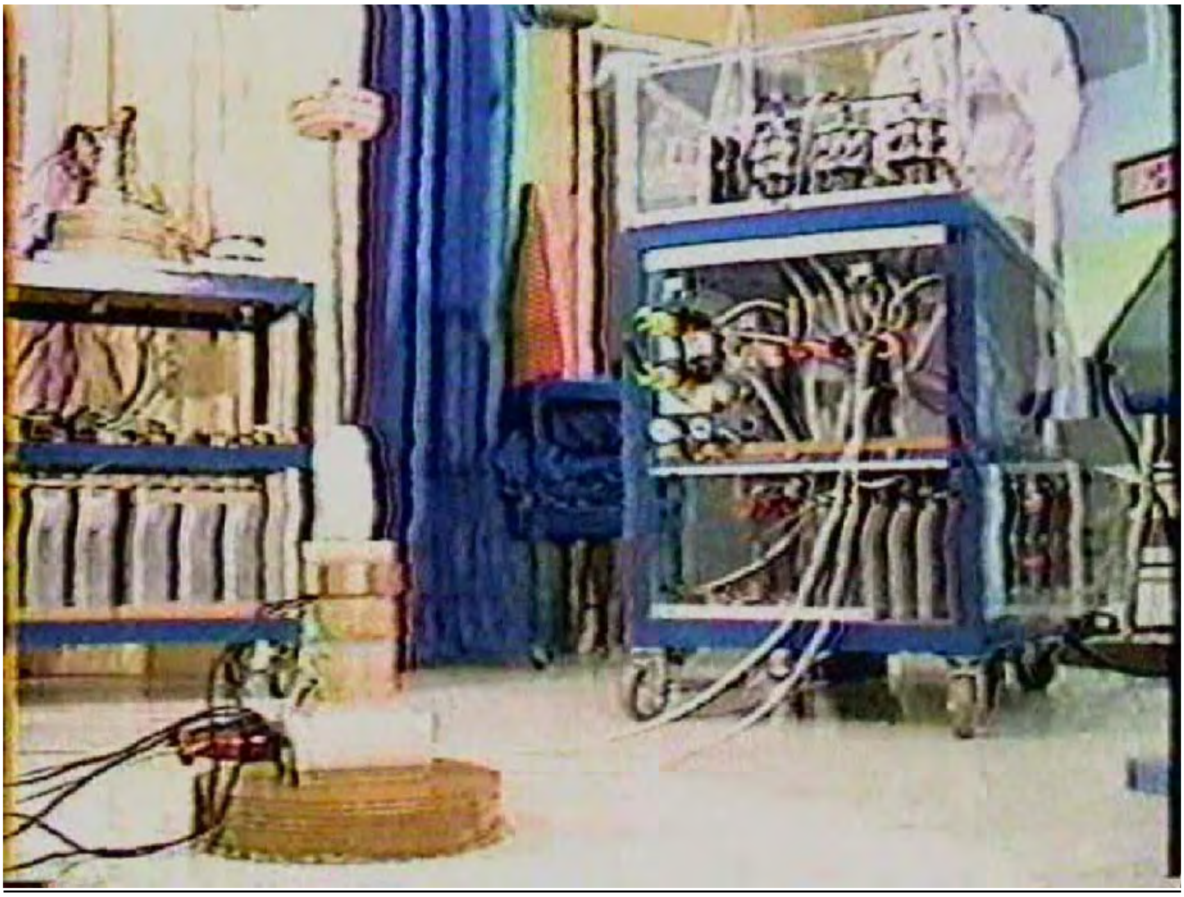

COMMENTARY: In this photo, note the "Projectile Cart" on the left. Six different types of projectile are launched from this demonstration platform. The bottom of this cart contains a pretty substantial capacitor bank array. You can see only 70% of the cart. This would imply that there are about 9 large capacitors in the first rank. If two rows are employed, then a total of 18 capacitors are needed. I suppose this sort of stored energy was needed to support the "Hover" demonstrations or the large 71 lb launch.

Mark Gray claims that this cart was in E.V. Gray's possession at the time of his death. He plans to enquire among family members as to where this piece of equipment went.

COMMENTARY: It is my contention that if this cart was saved from the one way trip to the surplus re-seller, then who ever got it couldn't make it operational. According to Mark Gray, his father spent his last days disassembling this equipment. This system would be high on the list of things to do first.

"Split the Positive?"

When asked if his father ever told him about the fundamental energy conversion process Mark Gray recalled one experience where his father told him "The energy starts from the positive terminal [of the storage capacitor/dipole] then part of it goes back to the supply battery and part of it goes to the load

COMMENTARY: This type of topology is shown in patent 4,595,975, but the actual technical meaning is anybody's guess.

The "Wireless Projectile"

Mark Gray claims that some potential investors would ask “What good is this system if you have to have wires connected to projectile? That is not going to work”. So he developed this demonstration apparatus to show that the projectiles really didn’t need wires. Actually, they are needed for only a short distance, beyond which the magnitude of the repulsive forces drops off quickly. The above setup provided a sliding contact that is in the little black & white tower on the left of the larger black cylinder. This arrangement allows for about 6-8” of travel before electrical contact is broken. By that time, the travelling mass has received most of the shock impulse it is going to get. The black repulsing coils are composed of copper magnet wire that is about 2” deep. The outside is covered with black vinyl electricians tape. Mark also said that it was hard to reconnect the sliding contact because of rotation after a shot. Apparently it took a broom stick and a ladder to rest the demo.

COMMENTARY: The measurable voltage of the energy that propelled the small black cylinder on top with the (white plastic saucer on the bottom) was said to be 5KV. Now look at the length of the arc trail [about 12”] of the little contact tower (at the left) after lift-off. Consider what kind of voltage was being generated at this point.

The State of the Storage Batteries prior to a test or demonstration for a Motor Cart

“When a motor cart was prepared for a test (or demonstration) both sets of batteries were fully charged”

COMMENTARY: So much for the idea of having to start with a dead battery. This theory comes from the idea that the lead-sulfite was the medium that might have converted a pulse of classical electricity into “Cold Electricity”

Another Cold Electricity Demo using the “Start Motor”

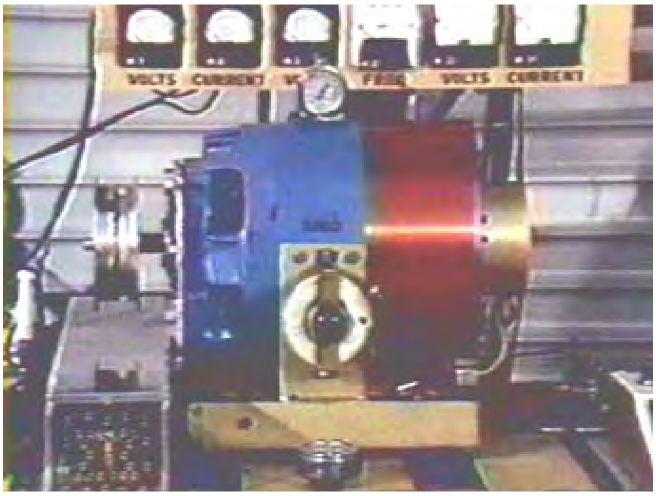

The white round dial instrument sitting on top of the “Start Motor” on the Multi-demonstration Cart is a thermometer. The other round dial instrument lying down on the table just below the round rheostat is a mechanical RPM indicator. [Biddle Meter]

The Importance of the Spark Gap

E.V. Gray told Mark Gary that the spark gap was very important.

COMMENTARY: A lot of other researchers think so too.

The Purple Motor

A Family Group Photo

Motor Names:

While the older E.V. Gray motors were numbered, the newer versions in the 80's were named according to a color. There was the Red Motor, The Blue Motor, The Purple Motor, The White Motor and the Black Motor. Each one was intended to demonstrate some particular aspect of this technology or head off any common questions that had continually arisen over the years.

Stump the Expert Time:

Once, a professional researcher, from MIT, was allowed to examine the equipment while development was taking place in Canyon Country, CA, (Possibly for some investor review). He had flight arrangements to leave the following Monday and had the whole weekend plus a day for his investigation. Apparently there were no restrictions placed on what he could look at. This man was alleged to be one of the co-inventers who developed the first anti-shark repellants. He examined and observed for at least one whole day and then made a comment to the effect, "If I can't figure this out, then all of my academic training is worthless". He worked all through the weekend and left the following Monday with no tentative classical explanation.

COMMENTARY: It would sure be nice to see if this individual would grant a phone interview. I'm sure he didn't talk a whole lot about his experience when he returned to Boston. I wonder if he would now?

Other Questions Asked through e-mail:

To your knowledge did your father (or his assistants) own or use any of these common electronics shop instruments?

Oscilloscope
Radio Frequency (RF) Generator

General Signal Generator
Pulse Generator
Transistor Tester
Q-Meter
Grid Dip Meter
Frequency Meter
Digital counter
Capacitor Tester
Battery Tester
Spectrum Analyzer
DC Power Supply

Of course any information about a general description, perhaps a Make and Model number (ha,ha), and an idea as to what the instrument was used for. When it was used and by whom.

Response 1) There were some meters involved, but I do not remember what meters might have been used or for they would have been used for.

2) The "kernel" of the technology appears to reside on the circuit trigger boards and the specific wiring to the off board components. From the photos we know that large power transistors were used. It is pretty obvious that other board components were used as well.

Do you happen to know what kinds of major components were on these boards? *We can assume that there were a number of supporting resistors and small capacitors*

Silicon controlled Rectifier (SCR)
Control Relays
Large Power Resistors
Transformers
Inductors or Chokes
Radio Frequency Coils
Vacuum Tubes
Diodes
Rectifiers
Power MOSFETS
Varisters
Potentiometers - Variable Resistors
Others
Model number of Power Transistors?

Of course a general description, approximate count, and any idea as to their function would be helpful.

Response 2) The most knowledgeable on the circuit boards may be Nelson 'Rocky' Shlaff (or Schlaff) from the Los Angeles area. I do remember that the circuit boards were developed in Canyon Country and for awhile the services of an electronics consultant was acquired to help development some of this circuitry. I do not remember the name of the consultant.

3) We know that you did a majority of the work on this equipment.

Was there any specific part of these "Carts" that your father reserved for himself to work on exclusively?

Response 3) Actually, my father did not protect any specific area of any of the technology that I can remember. Many people had cast their eyes on and all over the technology that was built. Nelson Schlaff and myself did most the assembly of the technology. There were others from time to time that were involved with the technology built.

4) Concerning the "Trigger Cart". You said that during its operation you would charge a certain capacitor to 5,000 volts before launching a projectile. You also said the voltage input was 220V AC.
Here are some general questions about the over all construction of the cart.

What Size Breaker was needed to power the "Trigger Cart" 30 Amp, 40 Amp, 50 Amp, higher?

Was a transformer use to raise the voltage from 220V AC to a higher voltage?

If 5,000 volts was the final measurable output voltage, then was there a higher voltage used somewhere else in the circuit that you know of?

Were Inductors or "Chokes" included on this Cart?

Did you ever have to make repairs on the "Trigger Cart", if so what was replaced and how often?

There are 4 "Ignitrons" on the Trigger Cart. Were all of these used at all times, or did different demonstrations use a different number of these devices?

Response 4) The only thing I remember about the voltage was charging the capacitors to 5,000v ?? for a one-time discharge (propulsion of a magnet), however, the hovering of magnets was achieved by a constant firing of the tubes.

5) Concerning the origins and nature of the transistor circuit boards used for the "converters".

Were these circuits made in house or contracted out? Did you make them? Did the design change over the years? If these boards failed who repaired them? Were replacements kept on hand?

Response 5) I do not recall much, if any was needed, maintenance on the circuit boards, nor do I recall having any made up as spares. I believe that all R & D and constructions of the technology happened in-house.

Mark McKay's investigation of Edwin Gray's Technology: Part 7

Edwin Vincent Gray (1925-1989)

Edwin Gray was born in Washington, DC in 1925. He was one of 14 children. At age eleven, he became interested in the emerging field of electronics, when he watched some of the first demonstrations of primitive radar being tested across the Potomac River. He left home at 15 and joined the Army, but was quickly discharged for being under age. At 18 he joined the Navy and served three years of combat duty in the Pacific. He narrowly escaped death when a bomb exploded on his ship's deck during an attack. He received an honorable medical discharge after spending some time in a navel hospital with head injuries.

After World War 2, he married his first wife, Geraldine, and started a family in Maryland. He worked as an auto-body and fender repair man. In 1956 he moved his family to Venice, California. A few months later he moved to Santa Monica where he began his first business named "Broadway Collision". A couple of years later, he opened a second shop in West Los Angeles. Both locations failed early in 1960 due to an economic downturn. He relocated to Prescott Arizona, and then to Littleton, Colorado in 1961. From 1962 until 1964, he worked in Las Vegas, Nevada, always in the auto-body repair business.

By 1965, Gray relocated to southern California again, and established a partnership with George Watson. Watson was a master car painter with an established clientele of Hollywood celebrities. A new location was established in Van Nuys, California on Calvert Street called "The Body Shop". It was a one-stop, high-end custom auto-body & painting shop. This business prospered well for the next three years until a conflict of romantic interests ended his first marriage (with seven children) in early 1968. A divorce followed in 1969.

(In 1971, Gray married Renate Lenz, the daughter of Fritz Lenz. They had three children. This relationship lasted 7 years. Gray married three more times after that.)

Towards the end of 1969, Gray terminated his auto-body business, never to practice it again. He sold 2/3^{rds} of the Van Nuys building to his nephew and re-outfitted the remaining portion to build and promote his next business enterprise. Somehow, Ed Gray had made a sudden and dramatic shift from the auto-body business to an independent inventor with an extraordinary technology, with hardly any previous background in electronics.

Members of his family are still baffled by the quick transition. Some say their father was occasionally struck with flashes of profound inspiration. Other researchers say that Gray must have been working secretly on the motors for years, but family members dispute this. Gray himself told one of his partners that he received this information from a Russian immigrant named Dr. Popov, who had gotten it from Nikola Tesla. But again, family members claim no knowledge of these supposed events. While there are similarities between Gray's technology from 1970 and Tesla's "Method of Conversion" technology from 1893, there is no known lineage to trace the connection between these two processes. No one ever saw Gray studying the work of Tesla, or running any preliminary experiments. No one who is still alive, who was associated with these events, knows where the technology came from or how it developed.

In 1971, Gray formed a limited partnership named EVGRAY Enterprises, Ltd. By 1972, Gray had gathered enough investment and development expertise to build a 10 HP prototype motor. This unit was submitted to Crosby Research Laboratories for evaluation at Cal-Tech. Crosby Research Institute was owned by Bing Crosby and run by his brother, Larry Crosby. This motor demonstrated an output of 10 HP (7460 watts of mechanical energy) for the extremely low electrical input of 26.8 watts. This is an apparent energy gain of 278 times the input! This left the Cal-Tech scientists very uncomfortable. The report states the motor operated at "over 99% efficiency", but the rest of the data is a little confusing.

On the strength of this report, Bing Crosby came on board as a major investor. So did 'Boot' Mallory, of the Mallory Electric Company, who made the high voltage ignition coils used in Gray's circuits. By early 1973, EVGRAY Enterprises, Inc. had completed a 100 HP prototype motor called the EMA4-E2. Fifteen private investors were now involved. Ed Gray also received a "Certificate of Merit" from Ronald Reagan, then Governor of California, during this period.

By the summer of 1973, Gray was doing demonstrations of his technology and receiving some very positive press. Later that year, Gray teamed up with automobile designer Paul M. Lewis, to build the first fuel-less, electric car in America. But trouble was brewing when a disgruntled ex-employee made a series of unfounded complaints to the local authorities.

On July 22, 1974, the Los Angeles District Attorney's Office raided the office and shop of EVGRAY Enterprises, and confiscated all of their business records and working prototypes. For 8 months, the DA tried to get Gray's stockholders to file charges against him, but none would. Since he only had 15 investors, many of the SEC regulations did not apply. By March 1976, Gray pleaded guilty to two minor SEC violations, was fined, and the case closed. After this investigation ended, the DA's office never returned any of his working prototypes.

In spite of these troubles, a number of good things were happening. His first U.S. Patent, on the motor design, issued in June of 1975, and by February 1976, Gray was nominated for "Inventor of the Year" by the Los Angeles Patent Attorney's Association, for "discovering and proving a new form of electric power". Despite this support, Gray kept a much lower profile after this time.

But there were also other set-backs. Paul Lewis pulled out of his deal with Gray in 1975 when Gray couldn’t deliver a production motor for Lewis’s Fascination car. Gray made a last ditch effort to secure the needed capital to get his motor into production by calling a press conference in 1976 and demonstrating his nearly complete, second generation 100 HP motor, the EMA-6. Unfortunately, this event didn’t secure any additional funds for the company. Shortly thereafter, Bing Crosby died in 1977, followed by ‘Boot’ Mallory in 1978. This left Gray without his two strongest supporters.

In 1979 Gray reorganized himself into ZETEX, Inc. and EVGRAY Enterprises, Inc. ceased to exist. In the process of this corporate restructuring, all of his earlier stockholders lost all of their money. Gray then moved his development operations to Kalona, Iowa where new investors were supporting his research. This working relationship also failed when these new partners attempted a hostile take over. In a sudden midnight flight, in the middle of winter, Gray loaded up the technology with all his belongings and headed to San Diego, CA where stayed for 18 months.

In 1982, he relocated his operations to Canyon Country, California where he hired three assistants to help build several large demonstration carts. After a year of work, Gray got suspicious of the loyalty of his employees. He abruptly fired all of them when they reported for work one morning. He then moved to a second location in Canyon Country and continued with the construction until early 1984. Later that year, he moved his operation back to Las Vegas where he stayed till the spring of 1985. In the summer of that year, he moved to the almost abandoned town of Council, ID (population of 816), where his oldest son ‘Eddie’ had settled down.

In Council, Gray finished up the construction of five different motor prototypes and several other kinds of demonstration equipment. He then began to produce promotional videos and invited local TV stations to report on his work. Gray then sought out the services of a Wild Cat oil exploration lawyer and found Mr. Joe Gordon of Texas doing work in Montana. The two men formed a partnership under Mr. Gordon’s established business Western States Oil. They also established a branch holding company in the Cayman Islands from which to sell stock in the new venture. Gray decided to move again, this time to Grand Prairie, Texas to improve his exposure to international investors.

On the strength of his videos alone, the Cayman Island operation was selling stock and raising capital quickly. Interested investors from Israel convinced Gray to spend two weeks in the Holy Land where a series of emotional group negotiations took place. An agreement was never reached. They conceded that the technology held a lot of promise, but it was not mature enough to be immediately employed on the battlefield. In addition Gray insisted on maintaining a controlling interest in what ever deal was cut. For whatever reasons, Gray came back with a much different attitude.

Meanwhile the agents who had been selling his stock in the Cayman Islands decided to give themselves large commissions, plus whatever other funds they had control of, and quickly move to Israel themselves. Apparently, they had also oversold the original stock issue by about three times.

Feeling swindled himself, Gray made a final, desperate attempt to get proper recognition for his achievements. He actually wrote letters to every member of Congress, Senators and Representatives, as well as to the President, Vice President, and every member of the Cabinet, offering the US Government his technology for Reagan’s “Star Wars” program. Remarkably, in response to this letter writing campaign, Gray did not receive a single reply or even an acknowledgment!

In 1987, a person named Reznor Orr presented himself, claiming to be a “Government Contact”. Mr. Orr first made straightforward offers to buy all of Gray’s technology outright for a modest price. These initial proposals did not meet with Gray’s approval, and he turned them all down. At about this time, Gray’s income stream from the Cayman Islands stopped. Mr. Orr’s next offers were much less friendly, and mixed with certain veiled threats. When Mr. Orr left town, “to let Mr. Gray think about it”, Gray realized he had a serious problem. Out of money and under threat, he quickly held a massive liquidation sale, including personal belongings and family furniture he had had for years. Only the equipment and materials he could stuff into his Ford F-700 box van were spared. Gray drove to Portland, Oregon and hid out for six months.

Some time during 1987 - 1988, Gray became ill with a serious case of pneumonia and was hospitalized. He had been a heavy smoker all his life. He never fully recovered from this illness and required Oxygen from this point on. His reduced lung capacity made it much more difficult to continue his work.

From Portland he moved to Sparks, Nevada. Gray rented a combination living quarters and shop space in a light industrial area. He unloaded his truck and began to disassemble all of his demonstration carts. He was living with Dorothy McKellips at the time who claims that Gray still did experiments during the day but in the evening all the components were once again taken apart and mixed with other parts. Early, one morning in April of 1989, about 2:00 am, somebody suddenly started banging hard on one of the shop windows. Gray, in his compromised health condition, got out his gun and went down stairs to frighten off the intruder with a warning shot. The gun failed to fire. A few minutes later, Dorothy found Ed on the floor. It is presumed that the resulting stress caused Gray to suffer a fatal heart attack, although the exact cause of death was never determined. He was 64. The identity of the late night visitor is not known.

Gray's oldest son "Eddie" flew to Sparks, Nevada to identify his father's body. Later, he spent several months attempting to help a Kansas group recover the technology. But, Dorothy would not release any of Gray's equipment until she had received a large payment for herself. The Kansas group then got a court order to take possession of the technology. But the document was poorly worded and did not define exactly what "technology" really meant. The order did state that they had rights to all of the motors. Dorothy caught this fact and gave them just the bare motors, keeping all the power converters and other things in her possession. Dorothy then decided to have the last laugh before this looming legal battle could escalate much further. She had all the remaining equipment, videos, parts, drawings, and laboratory notes hauled away and dumped in the local land fill. Apparently none of the remaining systems that the Kansas group had on hand were complete enough to reconstruct. Meanwhile, the remaining millions of dollars of investor capital in the Cayman Islands bank account were tainted by the fraud of the over-sale of the stock. Ultimately, these funds were either confiscated by the local government in fines or simply swallowed by the bank, since no one could withdraw the funds without being arrested.

[This account of the life and times of Edwin V. Gray was compiled by Mark McKay, of Spokane, Washington, after numerous interviews with a number of Ed Gray's surviving children. This account is an attempt to piece together the most accurate retelling of Ed Gray's story ever made available to the public. Many of the details in this account are in direct contradiction of earlier accounts as reported in the newspaper clippings from the 1970's. These earlier accounts should now be considered to be in error.]

Mark McKay's investigation of Edwin Gray's Technology: Part 8

Evaluating Common FE Coupled Inductor Systems in Terms of Delay Line Parameters

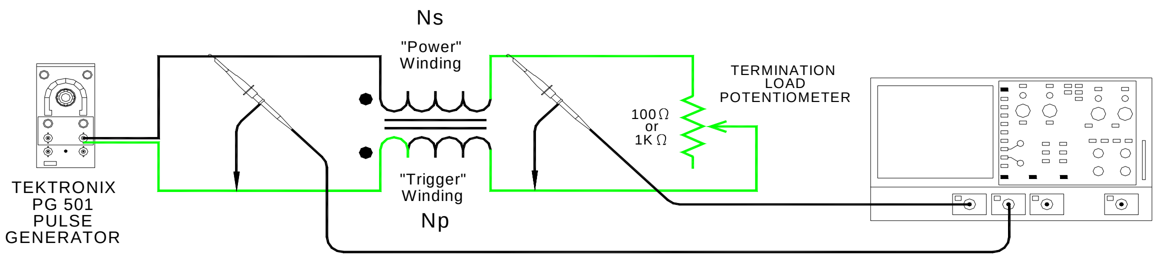

DETERMINING DELAY TIME T_d & CHARACTERISTIC IMPEDANCE Z_o

Coupled Inductors are a central component in a number of established Free Energy technologies. They have been used by Robert Prentice, Marvin Cole (E.V. Gray), Eric Dollard, John Bedini, Stan Meyer, and possibly Lester Hendershot. This is in addition to the vast array of coupled inductors that Dr. Tesla employed in his decades of research. Generally, modern independent researchers approach these devices from the standpoint of classical transformer theory and tend to view their operation in this way. I propose that, in many cases, these devices were intended to be used as Transmission Lines or Delay lines to take advantage of the unique features available with this topology. This is especially important when the characteristics of a high energy sparks are being engineered to achieve fast rise and fall times (<10 nS).

Volumes of detailed technical books are devoted to this complex subject. Specific applications are numerous because so many power and information signals are carried by transmission lines of one sort or another. However, in the realm of Free Energy the function of a Delay line appears to be relatively straight forward. Its common purpose is to act as a special kind of DC charged capacitor that will quickly deliver a fixed amount of disruptive energy to a spark gap. In applications that don't involve a spark, like the John Bedini motor, it is used (among other purposes) for sharp transition pulse formation using the same principles of operation.

There are two measurable parameters of a Delay line which are the foundation of most engineering analysis that will involve these devices.

1) The effective voltage time delay from one end to the other, abbreviated as T_d measured in seconds

2) The characteristic impedance Z_o measured in Ohms

Both of these values can be easily measured with standard electronics equipment. This paper will utilize a LeCroy 9361 dual channel 300 MHz Oscilloscope with two standard 10:1 10 Meg probes and a Tektronix PG 501 pulse generator. A Fluke 87 VOM will be used to determine the resistance of potentiometer settings.

A good place to start this subject is to observe how a commercial Delay line functions. In this example an old 465 Tektronix oscilloscope twin-lead vertical input Delay line is evaluated. To best see its operation, the PG 501 was set to the narrowest pulse it could produce (25 nS) and applied directly to the Delay line input. A 100 Ohm potentiometer was set to 50 Ohms and connected to the Delay line output. The second oscilloscope probe was connected in shunt with the termination potentiometer.

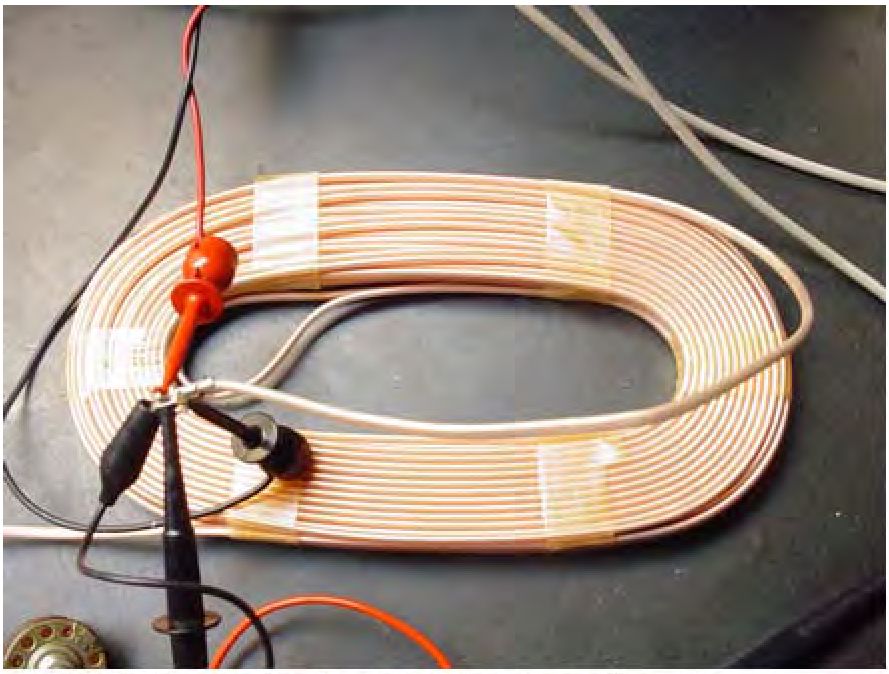

Vertical Delay line for Tektronix 465 Oscilloscope

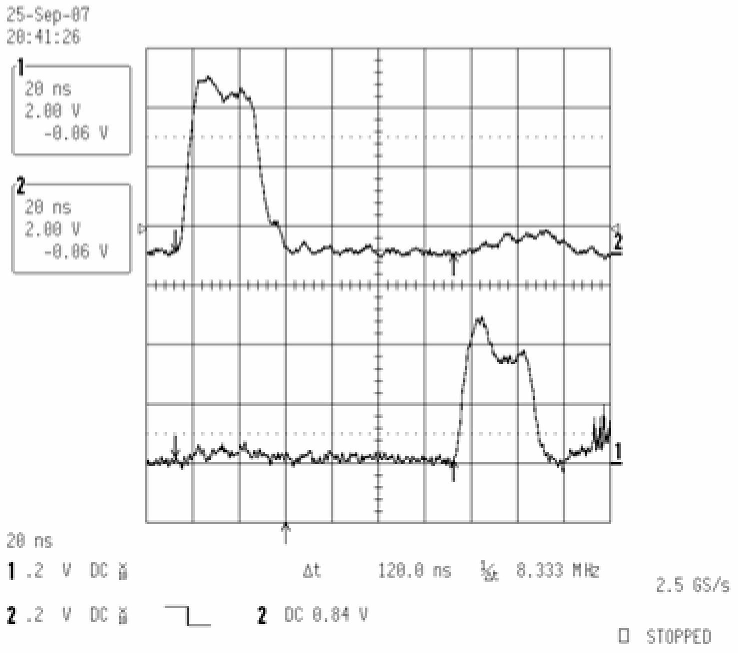

Resulting Trace using Two Probes

The two-channel trace from the oscilloscope (above) clearly shows the input pulse (Upper trace on Channel 2) and the output pulse (Lower trace Channel 1) delayed by 120 nS. While this straightforward approach will easily determine the delay time in a very low loss instrument Delay line, establishing delay times in homemade coupled inductors requires a different approach. If this present method were applied to most real-world coupled inductors, the output pulse will become so attenuated that it will be barely visible. The degradation of the input pulse increases as the coil under test becomes larger.

As it turns out, the energy in a 25 nS pulse is just too feeble to be observed in any homemade coupled inductor. This is because the parasitic capacitance filters out all of the high frequency components. Short pulses are just swallowed up in the unavoidable losses inherent in hand-wound inductors. However, another simple method, using the same equipment, can be employed to overcome these limitations. If the test input pulse is widened to some convenient length (to increase the applied energy) then the reflected pulse wave forms can be viewed. The actual delay time will be ½ of the observed time between the leading edge of the applied pulse and the change in response that is caused by the termination resistance.

A good example would be to make measurements on a typical Bedini SG motor coil. The coil being measured is a bifilar design using #19 AWG magnet wire for the "Power Winding" and #24 AWG magnet wire for the "Trigger Winding" with 420 turns wound on a Radio Shack wire spool. The soft iron welding rods used for the core were removed.

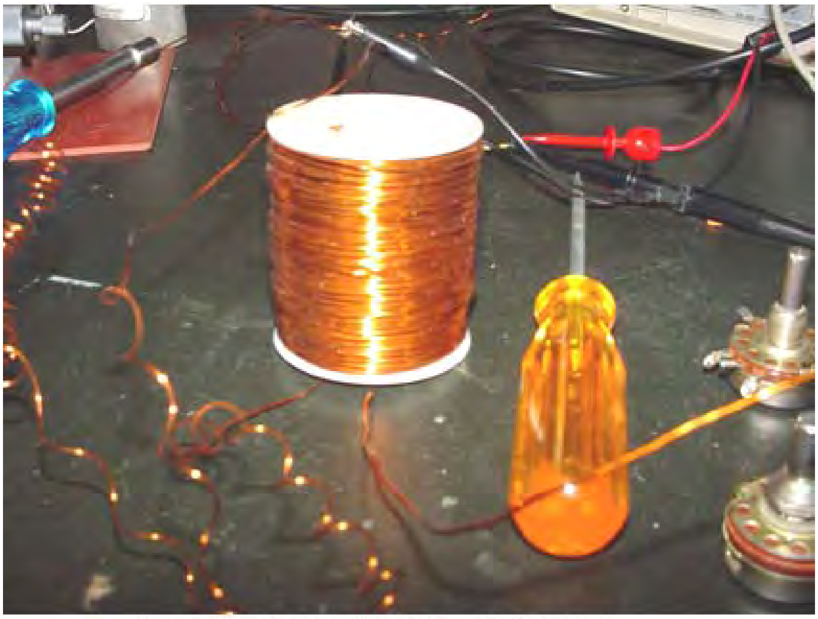

Typical John Bedini SG Bifilar Motor Coil

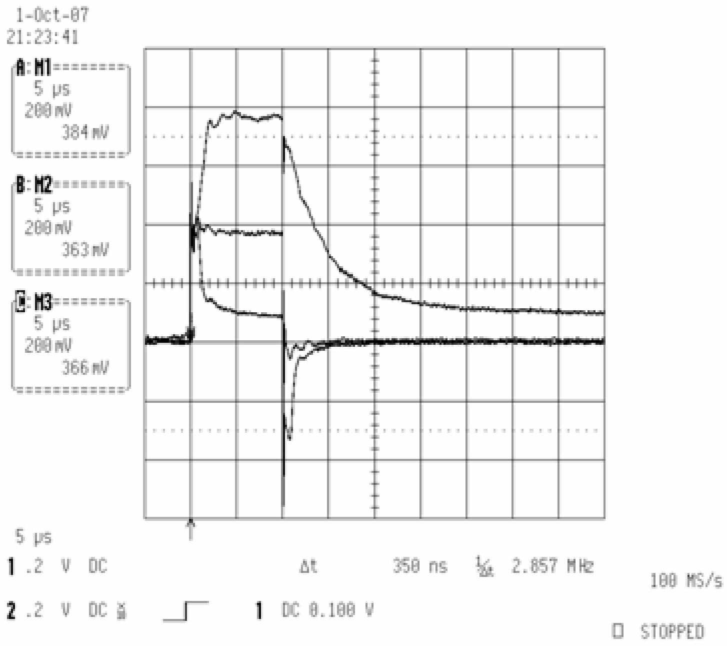

Dynamic Pulse Response

The first step is to establish the value of a load resistance R_L that will closely match the effective Z_o of the coupled inductor under test. This is done by applying a suitable pulse to the input of the Delay line (in this example we are using a 10 uS pulse) and then storing three traces:

a) Upper Trace: Delay Line is open at the output end

b) Middle Trace: Delay Line is terminated to a potentiometer adjusted to match Z_o Adjusted for "maximum squareness"

c) Lower Trace: Delay Line is shorted at its output end

What "maximum squareness" means is a matter of personal taste since there is always ringing and overshoots to have to deal with. However, when the potentiometer is close to the optimum value, small variations will make a big difference in the observed shape.

When the potentiometer is "dialed in", it is then removed from the test bed and its resistance value measured with a VOM. In this example the result was 40.6 ohms.

If the iron welding rods are inserted into the core, no observable change is noticed in this series of measurements.

The next step is to expand our time base on the above pulse and store another three traces, following the same procedures as above.

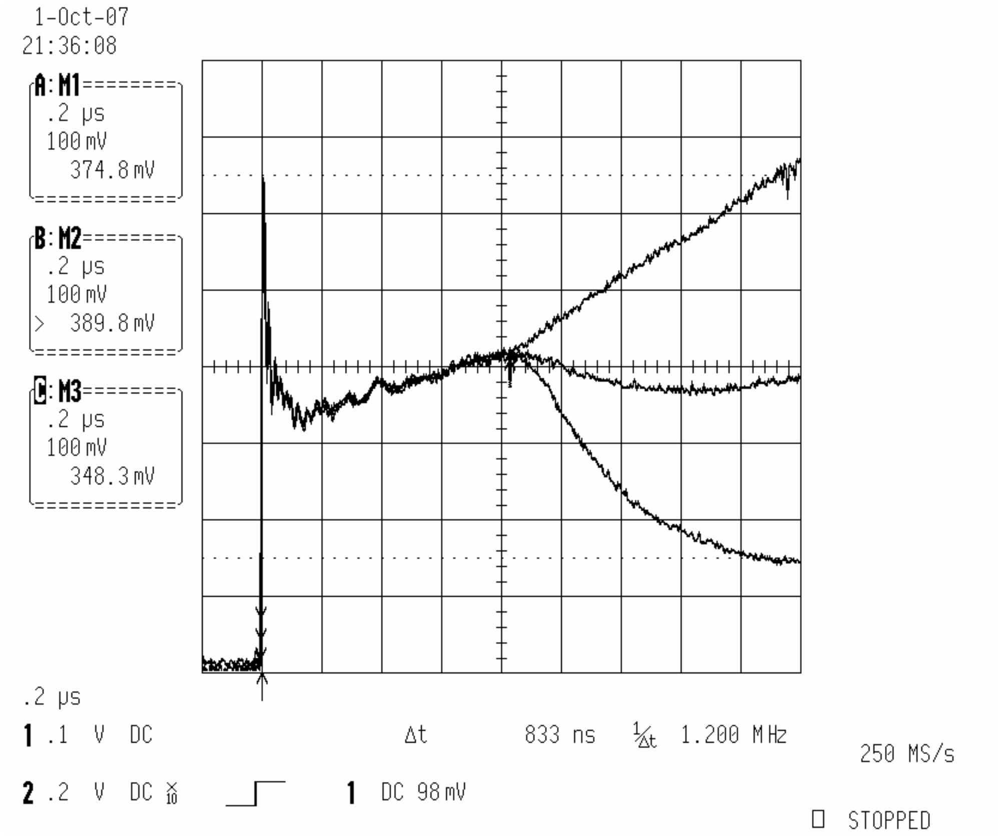

Leading edge of a pulse applied to a Bedini SG coupled inductor under three load conditions

Here, the time base has been expanded by a factor of 10X to view the leading edge of the applied pulse at 200 nS/div. The upper trace is the open condition. The middle trace is done with matched Z_o loading and the lower trace is the shorted condition. All three of these waveforms converge at one point. This point establishes how long it takes the applied pulse leading edge to travel to the end of the coupled inductor and return. The kind of load it finds attached at the end, then determines how it will respond from there on.

Measuring the time between the leading edge and this intersection, then dividing by 2 we arrive at the one way Delay Time for the coupled inductor under test. For this Bedini Coil we measure a T_d of 415.5 nS.

With this procedure we can go on to evaluate other kinds of FE coupled inductor systems:

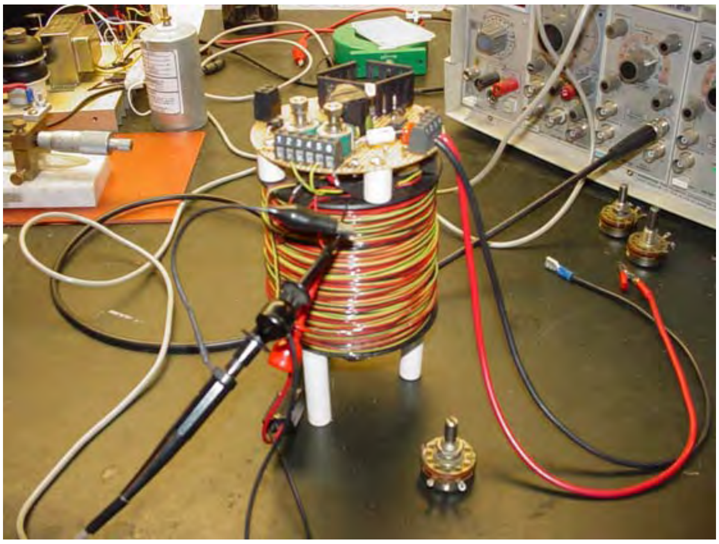

The Trifilar Lindemann Coil – 1000 Turns

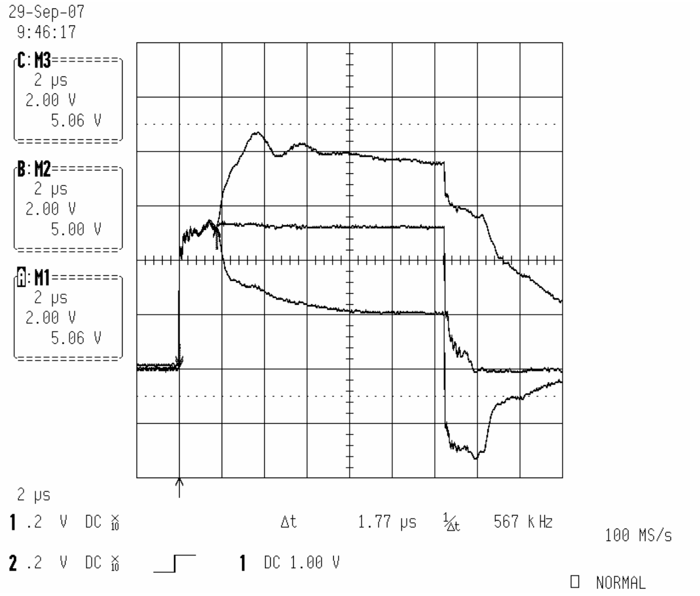

Z_o = 108 Ohms T_d of 885 nS.

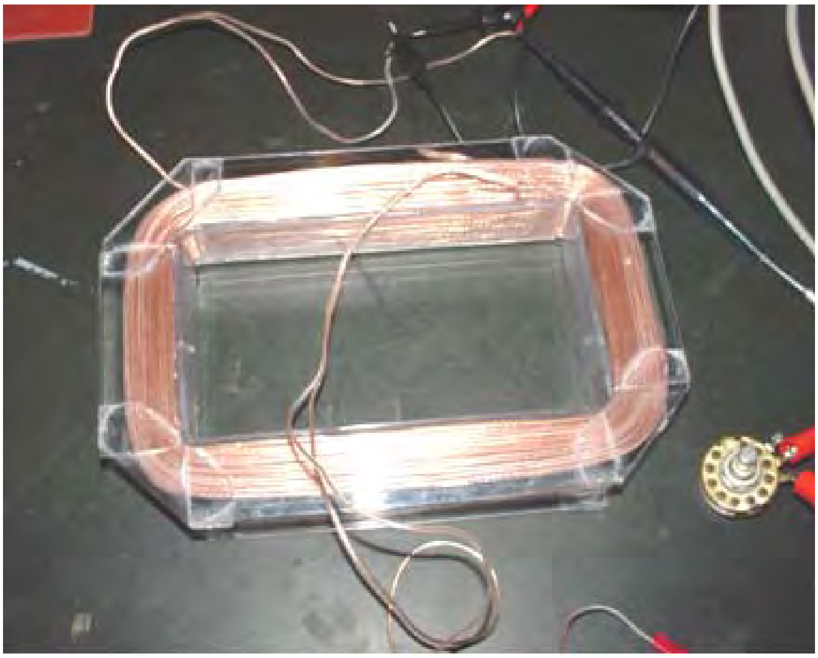

The Mike Motor Coil – 100' #22 Speaker Wire

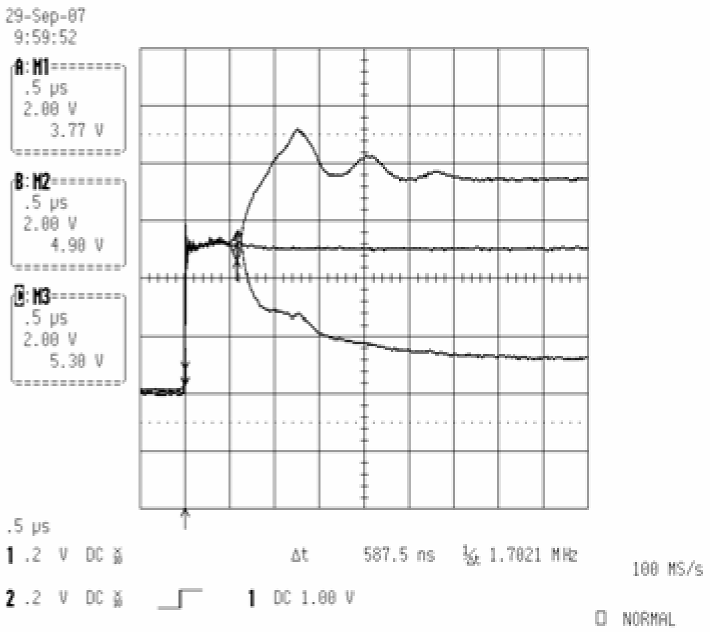

Z_o = 112 Ohms T_d of 293 nS.

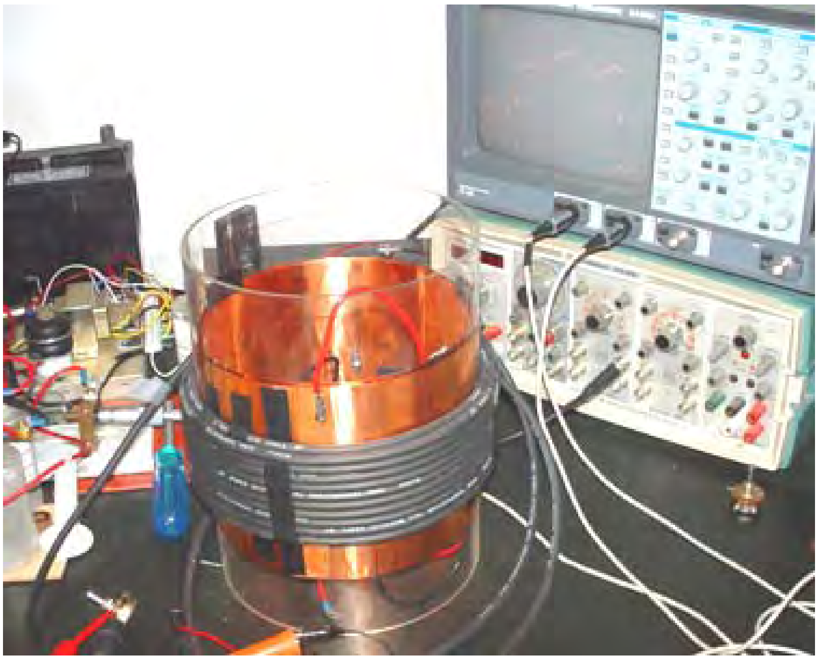

50 KV 8” Prototype Cole FFF

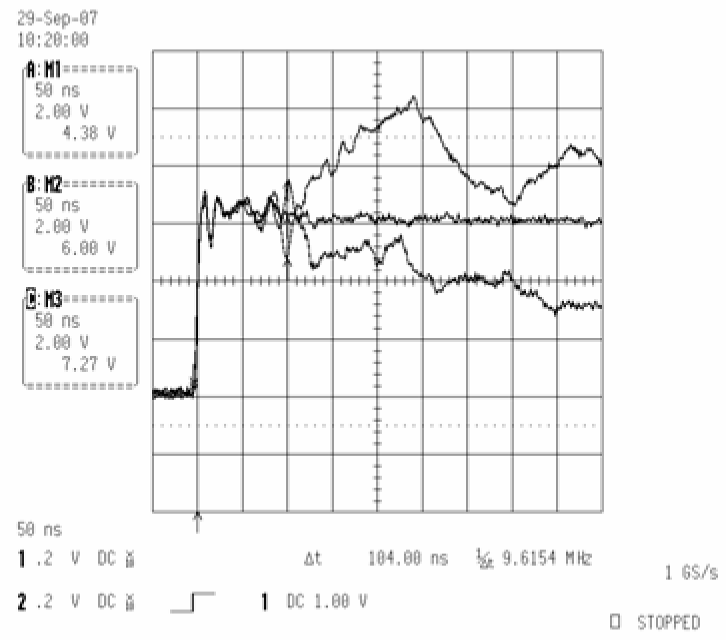

Z_o = 180 Ohms T_d of 52 nS.

Mike Brady's "Perendev" Magnet Motor

Patent Application WO 2006/045333 A1   4th May 2006   Inventor Mike Brady

PERMANENT MAGNET MACHINE

ABSTRACT

The invention provides a magnetic repellent motor which comprises: a shaft (**26**) which can rotate around it's longitudinal axis, a first set (**16**) of magnets (**14**) arranged around the shaft (**26**) in a rotor (**10**) for rotation with the shaft, and a second set (**42**) of magnets (**40**) arranged in a stator (**32**) surrounding the rotor. The second set of magnets interacts with the first set of magnets, and the magnets of both sets are at least partially screened so as to concentrate their magnetic field strength in the direction of the gap between the rotor (**10**) and the stator (**32**).

BACKGROUND

This invention relates to a magnetic repellent motor, or drive mechanism. Such a mechanism may be useful for driving an electrical generator, a vehicle, a ship, an aircraft, or the like.

Conventional power sources rely on fossil fuels or secondary power sources such as nuclear power, or electricity derived by whatever means, for its source of driving power. All of these sources of power suffer from disadvantages such as being the cause of pollution, requiring transportation or transmission over long distances to the point of use, and being costly to purchase. Thus, there is a need for a power source which is substantially pollution-free in operation, requiring substantially no external power, and which is simple to maintain.

SUMMARY

This invention provides a magnetic repellent motor which comprises: a shaft which can rotate about its longitudinal axis, a first set of magnets which are arranged around the shaft and which rotate with the shaft, and a second set of magnets arranged in a stator surrounding the rotor, where the second set of magnets reacts with the first set of magnets, both sets being partially screen magnetically in order to direct their magnetic field into a gap between the two sets of magnets. Thus, the interaction of at least some of the magnets of the first and second sets urge the shaft to rotate.

The interaction may be the net force of like magnetic poles repelling each other thereby urging the magnets away from each other, however, since only the rotor magnets can be moved by this urging force, the shaft is urged to rotate into a position where the repelling force is less.

The rotor may be substantially disc-shaped and the first set of magnets may be located in a peripheral region of the rotor which rotates with the shaft. The stator may be in the form of a pair of arms aligned with the rotor. These stator arms can be moved relative to each other and away from the rotor, in order to allow the gap between the rotor and the stator to be set selectively. The gap may be set manually, for example, by a hand wheel, or automatically, for example by a system of weights which move centrifugally and so form a rotational speed control which acts automatically, i.e. the smaller the gap, the greater the repulsion forces between the magnets of the rotor and stator.

Both the rotor and the stator may have more than one set of magnets. The magnets may be placed in sockets which extend towards the circumference of the rotor. These sockets may be substantially cylindrical and arranged in a plane which is perpendicular to the longitudinal axis of the rotor shaft. These sockets may also be arranged at an acute angle relative to the tangent to the circumference of the rotor disc where the mouth of the cylindrical socket is located. Similarly, the stator magnet sockets may be angled relative to the inner circumference of the stator. These angles may be between 18 degrees and 40 degrees, but preferably between 30 degrees and 35 degrees.

These sockets may have a socket lining consisting at least partially of a magnetic screening material. The socket lining may line the entire extent of the sockets so that only the opening to the exterior remains unlined. In another embodiment of the invention, the magnetic screen lining may cover a substantial percentage of the whole of the socket lining, e.g. 50% of the socket lining.

The magnets may be Nd-Fe-B of dimensions which fit snugly inside the linings of the sockets. These magnets may be cylindrical in shape and have a 37 mm diameter, a 75 mm length and a magnetic strength of 360,000 gauss. The socket lining, magnetic shield and magnet may all have a hole through them to receive a securing pin, preferably positioned so that it is parallel to the longitudinal axis of the shaft.

The number of sockets in the rotor and the corresponding stator may differ so that there is not a one-to-one relationship between the sockets in the rotor and the sockets in the corresponding stator. Similarly, the number of magnets in any additional rotor/stator sets may differ from the first rotor/stator sets in order that the two sets are out of register at any given time. Some sockets may be left empty in either the rotor or the corresponding stator, or both. The motor may have one or more rotor/stator pairs of this type arranged in a stack. It is preferable for the magnets of adjacent rotors to be out of register, i.e. staggered or offset relative to each other.

DESCRIPTION OF THE DRAWINGS

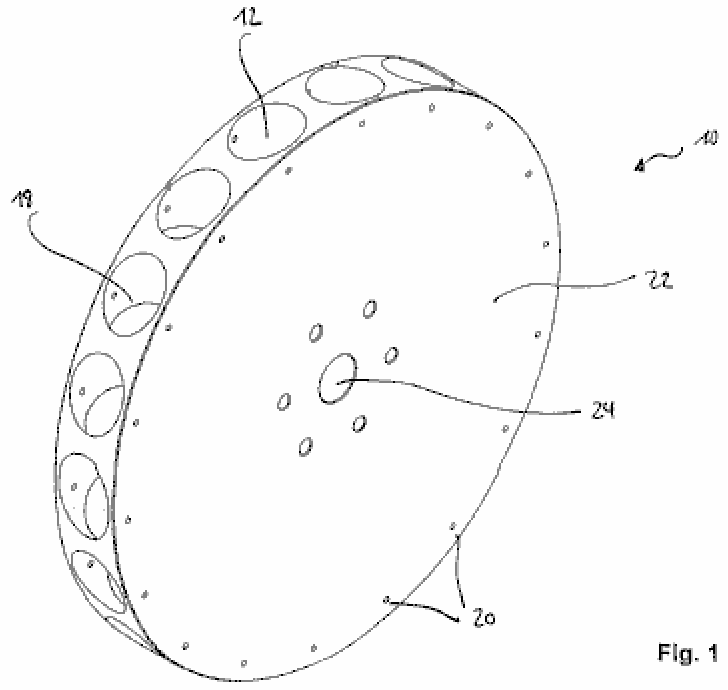

Fig.1 is a perspective view which shows one rotor disc.

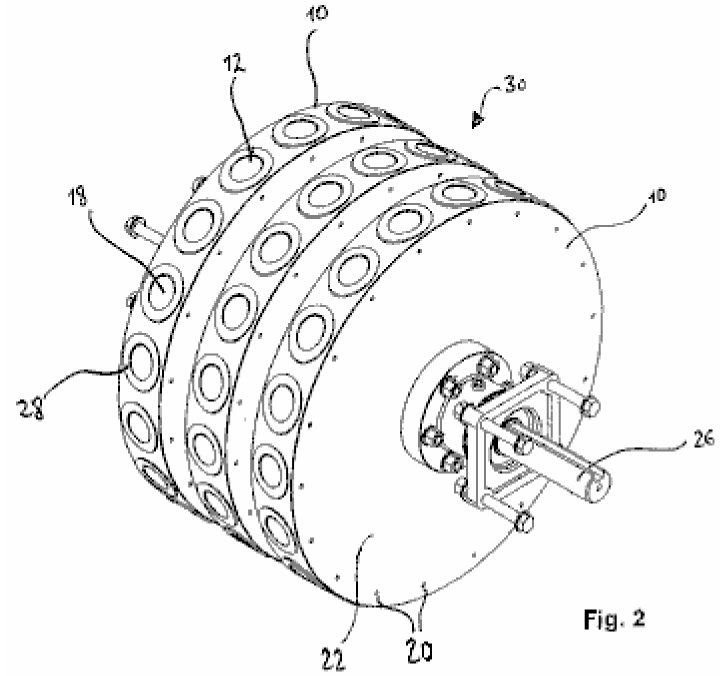

Fig.2 is a perspective view showing a stack of the Fig.1 rotors in an assembled arrangement.

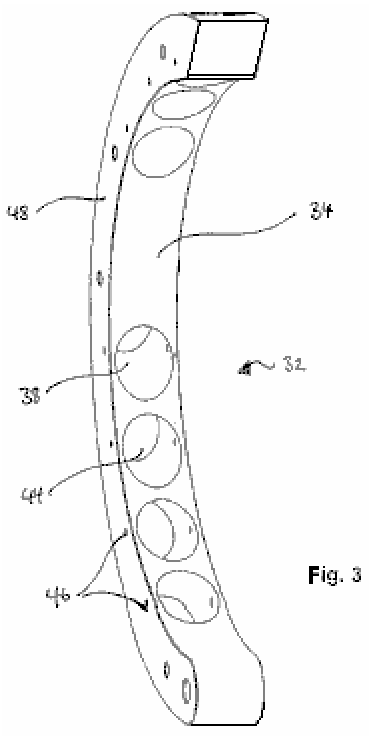

Fig.3 is a perspective view showing a left arm of a stator.

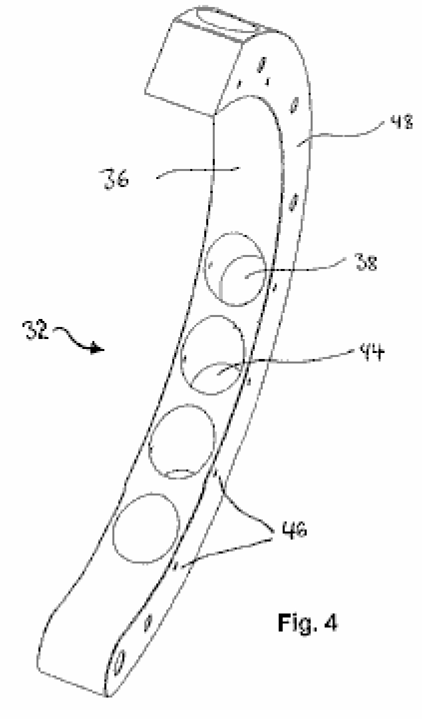

Fig.4 is a perspective view showing a right arm of a stator

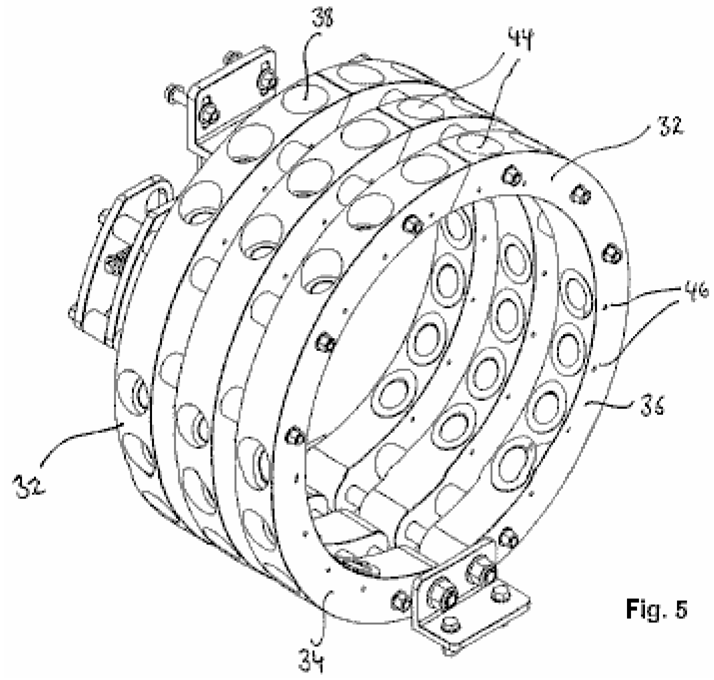

Fig. 5

Fig.5 is a perspective view showing a stack of the stators or Fig.3 and Fig.4 in an assembled arrangement.

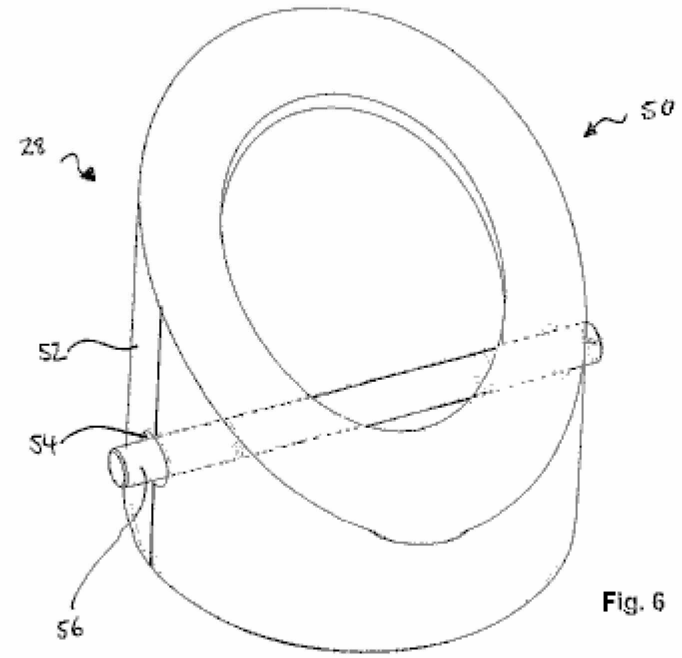

Fig. 6

Fig.6 is a perspective view showing a socket lining of a stator or a rotor.

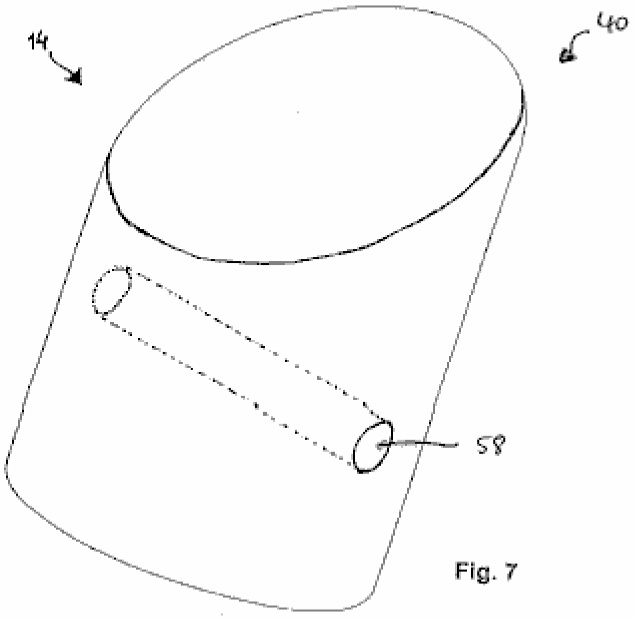

Fig. 7

Fig.7 is a perspective view showing one of the magnets.

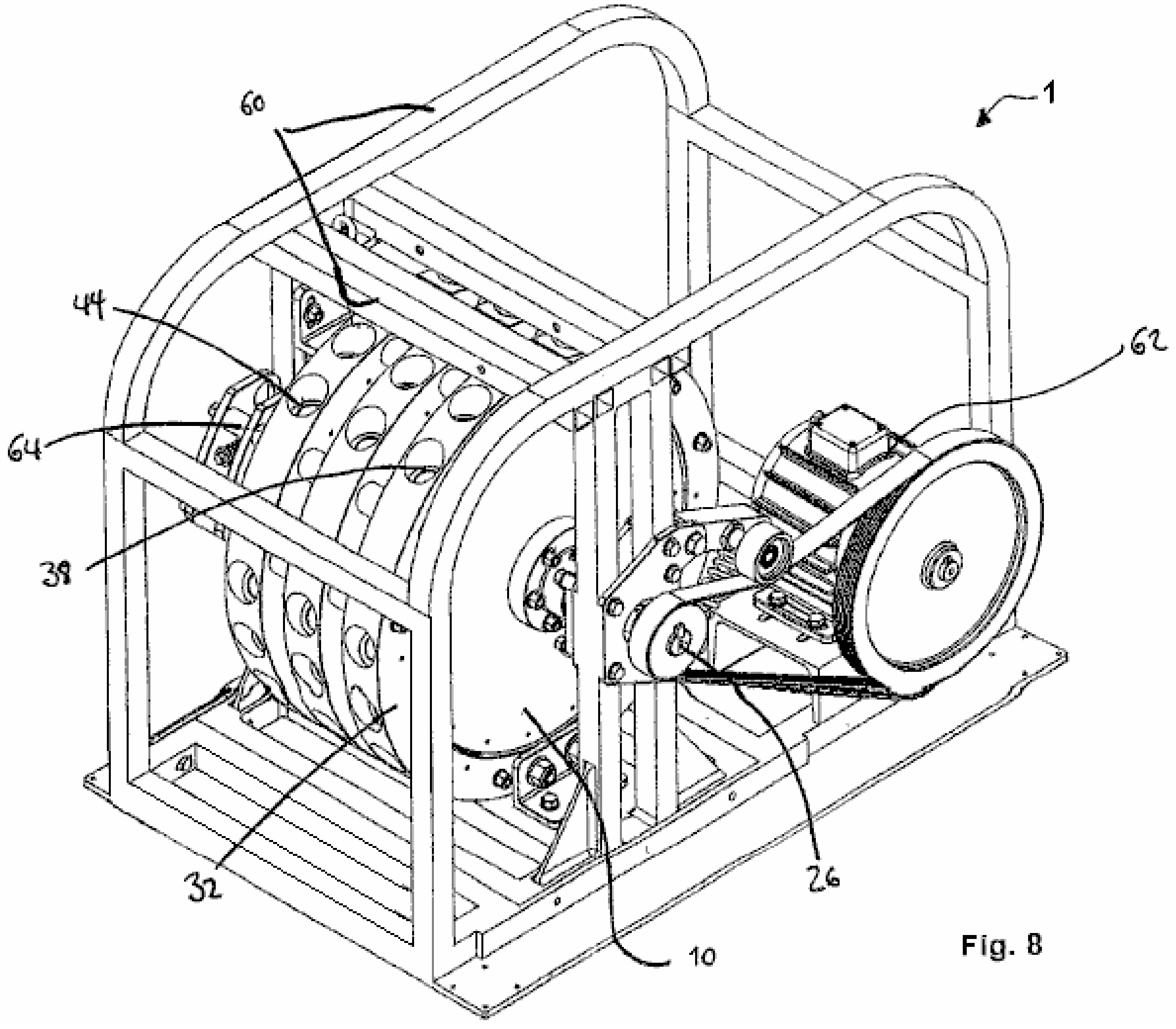

Fig. 8

Fig.8 is a perspective view showing one embodiment of the magnetic repellent motor coupled to an electrical generator.

DESCRIPTION OF PREFERRED EMBODIMENTS

Referring to **Fig.1**, a substantially disc-shaped rotor **10**, is made from a non-magnetic material. The rotor **10** has a plurality of magnet receiving zones **12**, provided in it for receiving magnets **28** (shown in later figures)

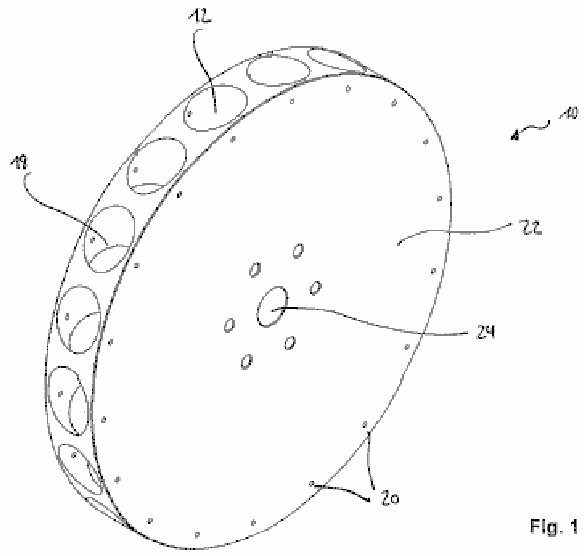

Fig. 1

of a first set **16** of magnets. The receiving zones **12** are in the form of circumferentially extending, spaced apart, and substantially cylindrical sockets **18** which are located in a plane which is perpendicular to the rotational axis **10** of the rotor and in a peripheral region of the disc.

In the region of the sockets **18**, the rotor **10** also has through holes **20** in it's side surfaces **22**, extending parallel to the rotational axis of the rotor. The rotor **10**, also has a centre hole **24**, to receive shaft **28** which is shown in later figures. The sockets **18**, are preferably angled at an acute angle relative to the tangent to the circumference of the rotor disc **10**, at the mouth opening of the sockets **18**. Ideally, this angle is between 18 and 40 degrees, and preferably between 30 and 35 degrees. In one particularly preferred embodiment, the angle is 34 degrees.

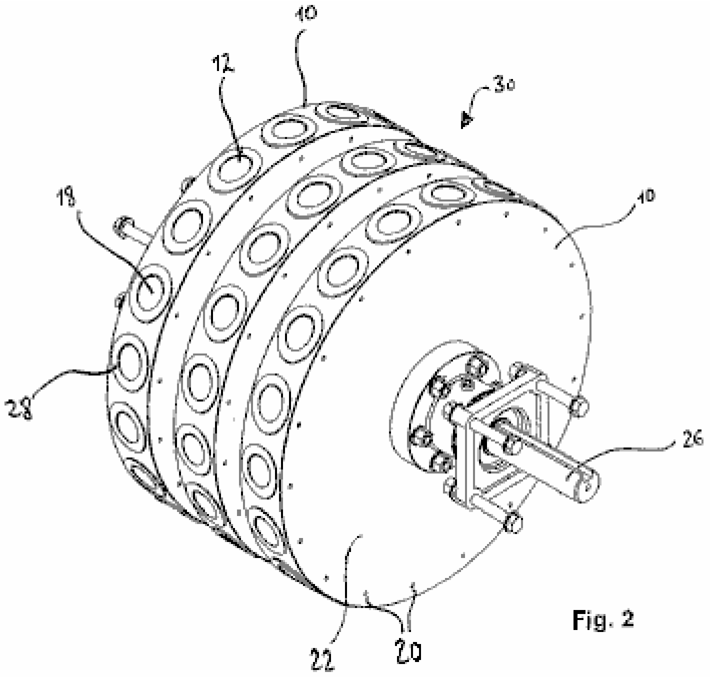

Fig. 2

As shown in **Fig.2**, the sockets **18**, receive (or incorporate) a socket lining **28** (shown in more detail in later figures) which is at least partially made of a magnetic screening material, whether metallic or non-metallic, for example, graphite. The socket lining **28**, covers the entire extent of the sockets **18**, so that only the opening to the exterior remains uncovered.

In the rotor assembly **30** of **Fig.2**, three rotors discs **10**, have been stacked in a row on the shaft **26**. The connection between the rotor discs **10** and shaft **26**, as well as between the rotor discs themselves, can be established via linking means which are widely known. In general, the motor may have any number of rotor discs **10**, and corresponding stators **32**, since the effect of using several rotor discs **10** in parallel, is cumulative. However, it may be useful for smooth operation of the motor **1**, to arrange the rotor discs **10** so that the magnets of adjacent rotor discs are staggered, or offset relative to each other.

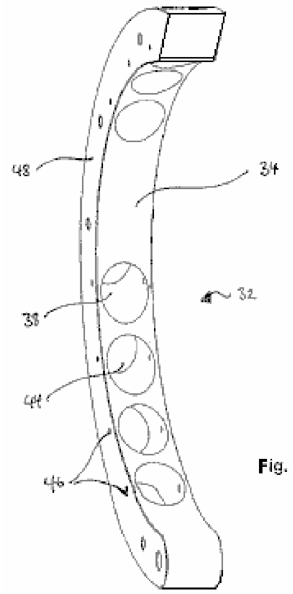

Fig. 3

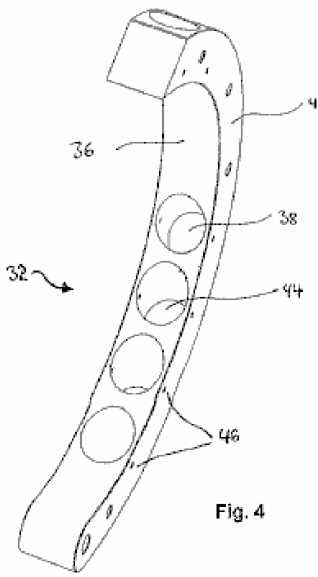

Fig. 4

Referring to **Fig.3** and **Fig.4**, a stator **32** is shown. This stator is made of a non-magnetic material. The left arm **34**, and the right arm **36**, combine to form the stator **32**. Each of the arms, **34** and **36**, has a substantially semi-circular shape and is sized so as to enclose the corresponding rotor disc **10** in the radial direction, while still leaving a gap between the stator **32** and the rotor disc **10**. The arms **34** and **36** of one stator **32**, can be moved relative to each other and their corresponding rotor disc **10**, so that the gap between the arms and the rotor disc can be set at different values.

The stator **32** has several magnet receiving zones **38**, ready to accept the magnets **40**, (which are shown in a later figure) of the magnet set **42**. These receiving zones are again in the form of circumferentially extending, substantially cylindrical sockets **44** which are positioned in a plane which is perpendicular to the longitudinal axis of shaft **26**. In the region of the sockets **44**, the stator **32** has through holes 46 arranged in it's side surfaces **48**, these holes extending parallel to the longitudinal axis of the shaft **26**.

These sockets **44** are again angled at an acute angle relative to a tangent to the inner circumference of the stator **32** at the mouth opening of the sockets **44**. This angle is preferably between 18 and 40 degrees and more preferably, between 30 and 35 degrees. The angle of the sockets **18** and **44**, and the relative positioning between them, has to be adjusted to allow for a good performance of the motor.

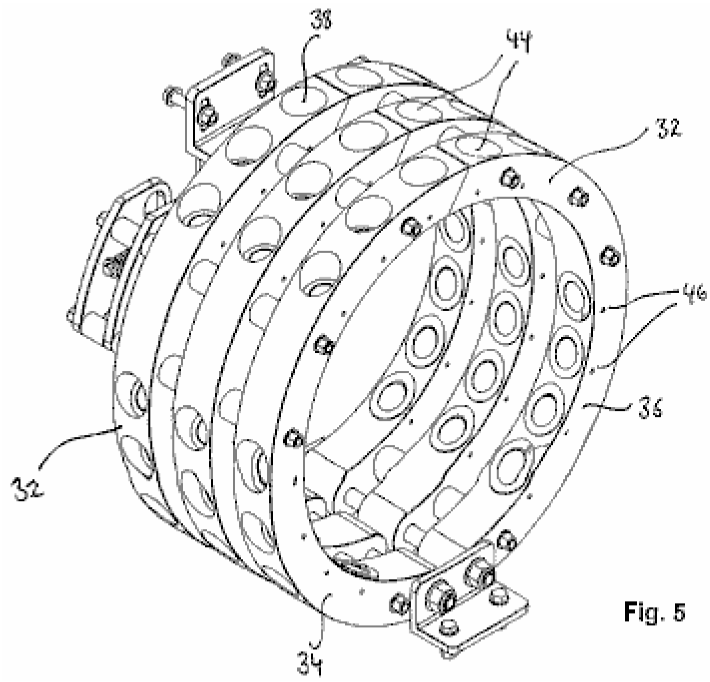

Fig. 5

Fig.5 shows a stator assembly consisting of three stators designed to fit the rotor assembly of **Fig.2**. As described with reference to the sockets **18** of **Fig.2**, the sockets **44** receive (or incorporate) a socket lining **50** (shown in more detail in later figures), which is at least partially made of a magnetic screening material. The socket lining **50**, covers the entire extent of the sockets **44** so that only the opening to the exterior remains uncovered.

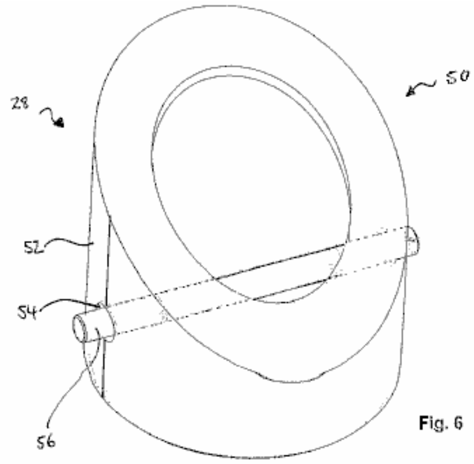

Fig. 6

Referring to **Fig.6**, a socket lining **28, 50** of the rotor disc **10**, or the stator **32**, is shown in more detail. The socket lining **28, 50** is formed to fit into the sockets **18, 44** and may be made completely of a material which has magnetic screening properties. In one preferred embodiment, the socket lining **28, 50** is made of diamagnetic graphite and is partially surrounded by an additional shield **52** of a material having strong magnetic screening properties, e.g. stainless steel. In the embodiment shown in **Fig.6**, the shield **52** surrounds about 50% of the socket lining surface.

Thus, by at least partially covering the sockets **18, 44** with a magnetic screening material, the magnetic field of the inserted magnets **14, 40** is, so to say, focussed axially with the socket **18, 44**, rather than dissipated about the magnets.

Further, holes **54** through the socket linings **28, 50** are provided and these correspond to the through-holes **20** and **46** in the rotor disc **10** and the stator **32**, respectively. Thus, a retaining pin **56** may be inserted after magnet **14, 40** has been put in socket **18, 44** to make a detachable fixing for magnet **14, 40** to the socket lining **28, 50** and the socket **18, 44** so as to prevent expulsion of the magnetic sources during operation.

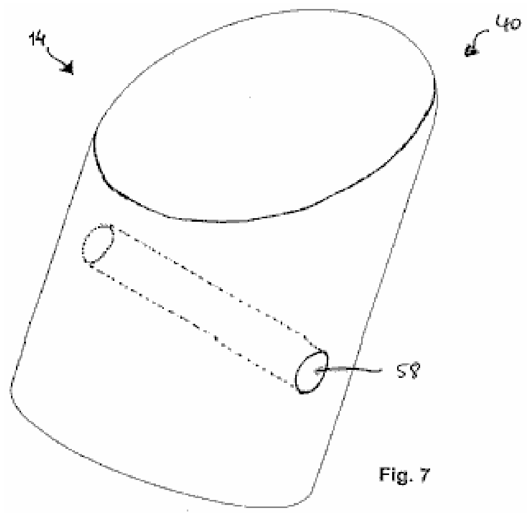

Fig. 7

Fig.7 shows a typical magnetic source **14,40** used in this motor design. The magnetic sources **18, 40** may be natural magnets, induced magnets or electromagnets. The magnetic source for example, is a Nd-fe-B magnet which has the necessary dimensions needed to fit neatly into socket **18, 44** and socket lining **28, 50**, respectively. In one preferred embodiment, the magnetic source **18, 44** is a substantially cylindrically shaped magnet with a diameter of 37 mm, a length of 75 mm and provides 360,000 gauss. However, the magnetic source **18, 44** may be shaped differently to cylindrical and may have different characteristics. In any case, the magnetic source **18, 44** must have a through-hole **58** to receive the retaining pin 56.

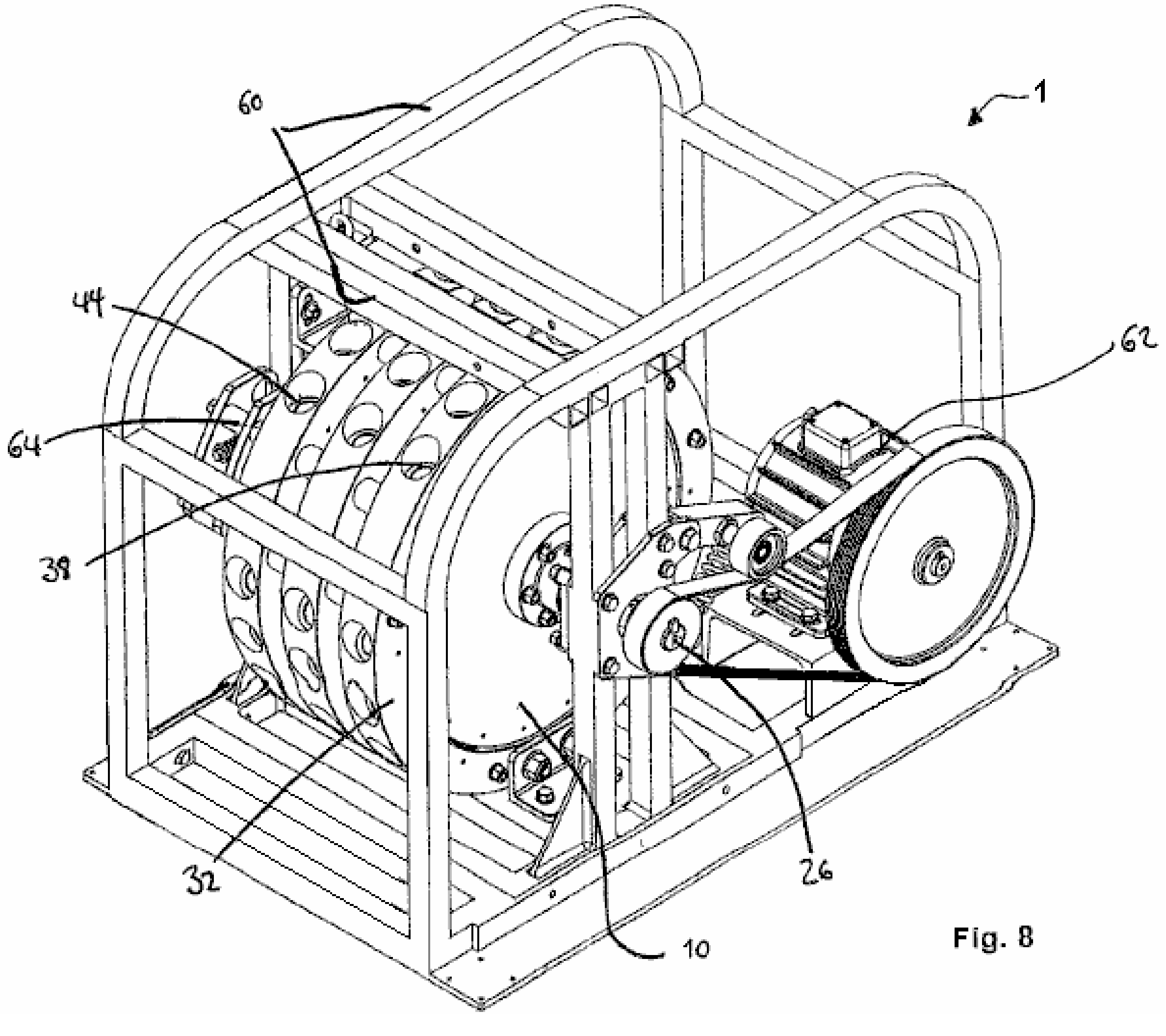

Fig. 8

The magnet motor shown in **Fig.8** is mounted on frame **60** and is coupled to an electrical generator **62**. In this specific embodiment, the motor has three rotor discs **10** of the type already described. These are mounted on a single rotating shaft **26** and are driven by three stators **32**, as already described, causing shaft **26** to rotate about it's longitudinal axis. Shaft **26** may be connected to a gearbox in order to gain a mechanical advantage. The stator arms can be moved by a stepper motor **64**.

The number of sockets in the rotor discs **10** and their corresponding stators **32** may differ so that there is not a one-to-one relationship between the sockets **18** in the rotor disc **10** and sockets **44** in the corresponding stator **32**. Similarly, the number of magnetic sources in the stator **32** and the rotor disc **10** may differ so that a proportion of the magnetic sources **14, 40** are out of register at any given time. Some sockets may be empty, i.e. without a magnetic source, in either the rotor disc **10** or the stator **32**, or both.

The sockets **18** of the rotor discs **10** can be staggered, i.e. offset relative to the sockets of adjacent rotors, or they can line up in register. Thus, the magnet motor may be time-tuned by the relative positioning of the magnetic sources **14** of adjacent rotor discs **10**.

Thus, the interaction of at least some of the magnetic sources **14, 40** of the first and second set **16, 42** urges the shaft **26** to rotate. Once the shaft begins to rotate, the plurality of simultaneous interactions causes shaft **26** to continue rotating.

As mentioned before, the motor can have any number rotor discs **10** and corresponding stator sets **32**. Although the precise adjustment of the motor elements is important, one may imagine other embodiments covered by this invention.

The Magnet Motor of Donald A. Kelly

Patent US 4,179,633 **18th December 1979** **Inventor: Donald A. Kelly**

MAGNETIC DISC DRIVE

ABSTRACT

This permanent magnet disc drive consists of two basic magnetic components, one large driven flat disc containing a uniform series of identical magnet segments, and a second magnetic driving means comprising multiple oscillating magnetic pairs of opposite identical magnet segments. The magnetic mechanism simulates the action of a clock escapement mechanism in that the oscillating magnet pairs uniformly oscillate between the disc magnet segments to induce continuous disc rotation. All of the multiple oscillating magnet pairs are oscillated by a motor, or motors, which provide an eccentric movement through a suitable gear reduction unit. The small DC motors are powered by multiple arrays of silicon solar photovoltaic cells at some convenient rooftop location.

US Patent References:

4,082,969	Magnetic torque converter	April, 1978	Kelly	310/103
4,100,441	Magnetic transmission	July, 1978	Landery	310/103

BACKGROUND OF THE INVENTION

At the present time the magnetic disc drive has reached the stage of development where the oscillating magnet pairs will rotate the magnetic segmented disc when the oscillations is done manually. The disc rotation is smooth and continuous when the manual oscillation is uniform and continuous, and the disc speed may be increased as the oscillation rate is increased.

Since the adequate functioning of the magnetic/mechanical-conversion concept has now been proven with a working prototype, a practical and economical self and/or external oscillation means for the oscillating magnetic pairs must now be developed. The magnetic disc drive was originally designed to be self-actuated by means of a multi-lobe cam and push rod arrangement, but this approach has not been proven successful to date.

A disadvantage for the self-actuated type of magnetic disc drive is that the disc is locked-in with a low, fixed speed output which is dependant on the natural magnetic field interaction between the involved interacting magnet segments.

A mid-diameter direct displacement multi-lobe cam was used for the first prototype, but this did not work because of the high rotational resistance imposed by the high cam lobe angles. A peripheral, direct displacement multi-lobe cam was also tried but this was not successful because of the moderate and sufficient cam lobe resistance to push rod displacement.

Other cam lobe configurations are being planned and developed to make sure that no possible trade-off to self-actuated mechanical oscillation is overlooked. Another possible approach to self-actuation for the magnetic disc drive is by the application of a twin level magnetic commutator which is directly connected to the disc drive shaft. The magnetic commutator segments alternately attract corresponding radial magnets on pull-rods which are pivoted on each of the oscillation plates of the magnetic pairs.

While auto-actuation of the magnetic disc units may be desirable for some self-contained power applications, the low, fixed speed output is not considered attractive and promising for a wide range of household power applications. Because of the inflexibility of speed output of the auto-actuated type of unit the, the development of a variable speed, externally oscillated type of disc unit is required to meet the growing demand for alternate and auxiliary power means for many applications.

The matching of a large magnetic disc drive and small solar powered DC electric motors is a nearly ideal arrangement since a single or series of small precision DC motors can be readily powered by modest arrays of silicon photovoltaic cells located at some convenient rooftop location. Small high-efficiency, ball bearing DC motors are available which, when connected to suitable gear reduction drives, can revolve a simple eccentric mechanism with sufficient power and variable speed, to cause oscillation of a series of four to six magnetic oscillating pairs of stator magnets.

This series of magnetic oscillating pairs will all be connected together with straight linkage to transmit the reciprocating motion from the driving oscillating shaft to the other oscillating shafts of the series. This is a more desirable multiple driving arrangement rather than separate small DC motors since synchronism is automatically assured, rather than more complex and less reliable electrical synchronization requirements. Because there is no locked-in synchronism for this type of external oscillation means, the multiple magnetic oscillation pairs must be of the minimum interference type, in that they must not become jammed into the disc magnet segments. Although the proper functioning of the magnetic disc unit requires that the oscillating magnet pairs must enter the disc's magnet segment interference circle, deflection means must be added to all of the oscillation plates to insure that the continuously revolving disc will readily by-pass all of the oscillating magnet pairs.

The large magnetic disc unit will consist of a basic non-magnetic circular disc, on which multiple high energy permanent magnet segments are equally spaced around the rim of the disc. The drive shaft of the disc rotates on precision ball-bearings and may be chosen to revolve in either a horizontal or a vertical plane. The disc is the driven component of the magnetic drive assembly, and it can be connected to the load or an electrical generator.

The multiple oscillating magnet pairs are the driving component of the disc drive unit and consist of flat, non-magnetic oscillation plates, on which identical high-energy permanent magnets are secured at each end of these oscillating plates. The magnet segments are placed with opposite poles exposed at the sides, relative to each other so that a north-south pole couple reacts on the disc's magnet segments. The driven disc's direction of rotation depends on the polarity of the disc's magnets in relation to the oscillating magnetic pairs.

The oscillating magnetic pairs will make a full back and forth oscillation between two adjacent local disc magnet segments so that an alternate "pull and push" effect is induced on the magnetic segmented disc. The basic synchronism between the disc's magnet segments and the multiple oscillating magnet pairs closely simulates the action of a watch or clock escapement mechanism in respect to the natural "cogging" action between the functioning components.

This general magnetic disc drive arrangement insures smooth and continuous rotation for the driven disc with an optimum of magnetic energy interchange between the oscillation stations and the magnetic disc because of near pole face to pole face exposure. It is now believed that this present type of magnetic disc drive is approaching a theoretical maximum of conversion performance possible, especially when compared with other types of magnetic/mechanical arrangements such as magnetic worm and worm discs, spur couples, mitre couples, and all types of inferior, linear magnetic devices.

The attractiveness of the basic magnetic disc and oscillating pairs is that a nearly ideal leverage factor is introduced in magnetic/mechanical conversion arrangements. Simply stated, considerably less energy is needed to oscillate the oscillating pairs than is produced from the near pole face to pole face magnetic interaction between the functioning magnetic components.

The alternating and uniform "pull and push" force imposed by the oscillating magnet pairs on the disc magnet segments produces no direct back or counter force reaction on the driving oscillating magnet segments which is the master key for a useful and practical magnetic/mechanical conversion drive. The back or counter-reacting force on the oscillating magnet pairs is taken directly by the fixed pivots of the oscillation plates, with a minimum of load penalty imposed on the drive of the oscillating magnet pairs.

All other types of rotary magnetic/mechanical conversion devices, with the possible exception of the worm and worm disc type, produce an undesirable back reaction force on the driving component and resulting ineffective performance. The magnetic worm and worm disc units have not proven to be sufficiently worthwhile for commercial applications because of the very high permanent magnetic energy necessary and due to the low speed output of these mechanisms.

When configuration comparisons are made of all types of possible magnetic/mechanical conversion devices it will be noted that the combination of a magnetic disc driven by multiple oscillating magnet pairs will stand out as a practical and useful permanent magnetic conversion arrangement. The incentive for the development of this magnetic disc drive was the direct outgrowth of overall disappointing performance of solar energy conversion efforts and the frustrations encountered with component costs, conversion efficiency and a lack of suitable energy storage means. While solar energy is being widely hailed for its future potential as a viable alternate energy source, relatively few engineers speak out about relatively poor overall cost/effectiveness due to days-on-end of overcast skies during the winter months when the energy is most needed, especially in northern latitudes.

Because of the less-than-adequate solar energy conversion outlook for the vast majority of American homeowners, other alternate, small scale, decentralised, energy sources must be explored and developed on a crash program basis. If this is not done within the next several decades we must accept the alternative of a greatly reduced standard of living because of the alarming rise in the rate of energy costs.

This magnetic disc drive represents a practical solution in applying permanent magnetism in the development and commercialism of a decentralised, silent, fuel-free, household-sized alternate power system. While the power output from an individual magnetic disc unit may be small, the power output is constant and does not generally depend on the intensity of an external energy source, as do present solar energy systems.

SUMMARY OF THE INVENTION

The magnetic disc drive unit is comprised of a large driving disc made of non-magnetic metal on which several permanent magnets are equally spaced around the rim. The disc drive shaft rotates on trunnion supported ball bearings and may revolve in nearly any conventional position, and may be constructed with any practical large diameter.

The identical oscillating magnet pairs are the driving component of the disc drive and consist of flat, non-magnetic plates on which, pairs of identical permanent magnets are secured at both sides of the oscillation plates. These magnet pairs have opposite pole faces facing each other. The disc's direction of rotation is determined by the polarity of all the disc's magnets relative to the polarity of the oscillating magnet pairs.

The oscillating pair of magnets make a full back and forth oscillation while each rotor disc magnet passes by. This produces a pull on the disc magnet as it approaches the oscillator magnet and then when the oscillator moves that magnet away, a push force is applied to the magnet on the rotating disc by the second magnet of the oscillating pair of magnets. The synchronisation of the disc and the oscillating magnet pairs must be maintained for continuous and smooth rotation of the disc. This movement is similar to the action of a clock escapement-mechanism.

The method of moving the oscillating pairs of magnets is one or more solar-powered DC motors. These motors drive push rods which are in contact with ball bearings mounted on the oscillation plates. Since the eccentrics must move at relatively slow speeds, suitable gear reduction units must be used between the motors and the rocker arms.

In order to maintain proper synchronisation of all of the oscillating components, straight links are used to connect all of the driven oscillation shafts to the driving oscillation shaft. Four or five oscillation stations can be driven from one driver oscillation shaft so that a disc drive with a large number of oscillation stations will require several D.C. motors to drive all of the other oscillation shafts.

It is important that the multiple, identical oscillation plates and their magnet pairs be slightly shorter in width than the space between two adjacent disc magnet segments, so that an optimum pull and push force is induced on the local disc magnet segments. One side of the oscillating magnet couple "pulls" on the disc's permanent magnet and then the other oscillator magnet "pushes" the disc's permanent magnet onwards as it has been moved into place by the oscillation.

All of the oscillating magnet pairs oscillate on stationary rods, or shafts, and all of the eccentrics and DC motor drives remain fixed on a base plate. The other ends of the oscillating rods or shafts must be supported by some form of bracket to keep the oscillation plates parallel to the disc magnet segments. Each eccentric which moves a ball bearing attached to arms on the oscillation plates must make one full 360 degree revolution within the angular displacement arc between two adjacent rotor disc magnet segments. Two small pivot brackets are attached to the extreme, non-magnetic ends of the oscillation plates to allow these plates to oscillate freely with a minimum of friction.

The basic rotational relationship between the magnetic oscillating pairs, and the magnetic segmented disc, will have a bearing on the gear reduction ratio required for the gear drive unit coupled to the small DC motors. Fairly rapid oscillation is necessary to maintain a reasonably acceptable disc speed which will be required for most power applications. The size of the eccentrics which oscillate the oscillating magnet pairs will be determined by the full oscillating arc needed and the mechanical advantage required by the oscillation plate in order to cause the optimum rotation of the magnetic disc drive unit.

Proper magnetic disc drive functioning requires the pulling magnets of the oscillating magnet pairs to enter the disc's interference circle within the mutual magnetic field zone between the two local interacting magnets on the disc's rim. Since the disc will revolve continuously, the withdrawing phase of the "pulling" magnets brings the "pushing" magnets of the couple into the disc's interference circle within the mutual magnetic field zone, for effective interaction with the adjacent disc magnet segment.

All of the magnet segments on the oscillation plates which form the magnetic couples must be in line with the corresponding disc magnet segments in order to maintain an optimum interaction between them.

Because there is no natural, lock-in synchronism for this type of magnetic disc drive, the multiple magnetic oscillating magnet pairs must be of the minimum interference type, which consists of adding plastic deflectors to the oscillation plates to prevent the pulling magnets of the couple from jamming into the disc magnet segments. Since the oscillating magnet pairs must never jam into the disc and stop its rotation, the plastic deflectors will allow the oscillation plates and magnet pairs to be deflected away from all of the disc magnet segments.

The permanent magnets selected for both components of the disc drive must be uniformly identical and have the highest possible energy product or magnetic induction plus coercivity. Both of these magnetic properties will play a significant role in determining the true value of the magnetic disc drive unit. At the present time the rare-earth/cobalt permanent magnets offer the highest possible magnetic properties for this application, but their cost is very high and currently not considered cost effective for the magnetic disc drive. Since costs will also play a major role in the competitive value of the disc drive, the magnets selected must show the highest possible cost/effectiveness ratio, along with long operating life.

Rectangular ceramic permanent magnets with large flat pole faces are preferred for the disc drive prototypes, and there is no theoretical limit to the size of both interacting components. A practical limit to the actual size of the components is imposed by weight and material cost restrictions plus available space, but nearly any practical number and size of uniformly identical magnets may be used to make up the magnetic disc drive.

It will be advantageous to build up each disc magnet station into clusters of up to about twelve to twenty four individual magnets which are arranged in lengths of four or five units and double or triple widths depending on the disc diameter. A large diameter disc unit is always desirable since the torque output for the disc unit depends on the tangential magnetic force produced by all of the oscillating magnet couple stations multiplied by the disc radius.

The large diameter disc speed will be relatively slow, in the 20 to 30 r.p.m. range, so that the disc output speed must be stepped up to a useful 750 to 1200 r.p.m. speed range, by a belt drive arrangement. The magnetic disc drive output is best adapted to run an electrical generator or alternator to produce electrical power for various household purposes.

An advantage to using silicon photovoltaic solar cells on an exposed rooftop location as a power source, is that they are capable of providing a partial E.M.F. under non-sunlight/overcast sky conditions. With full sunlight exposure the electrical energy produced will run the magnetic disc drive at its maximum possible speed, with reduced sunlight levels producing a corresponding proportionate reduction in the disc output speed.

A workable option exists for using a greater number of silicon photocells than would be normally necessary for full sunlight operation. The number of cells selected would be capable of running the magnetic disc drive at full speed under overcast sky conditions, with any excess full sunlight current bypassed to storage batteries. This option is a desirable arrangement since the disc will be assured of full electrical input power each day, with battery power available to make up the loss from any dark daytime sky conditions.

The principal object of the invention is to provide the highest torque output for the large driven disc from the lowest possible torque input for the multiple oscillating magnet pairs, as a useful power step-up means for electrical generating applications.

Another object of the invention is to provide a step-up power source which can be produced at competitive costs, requires no combustible fuel and is non-polluting while running silently and continuously.

It is a further object of the invention to provide a natural energy source which has an extremely long operating life, with a maximum of operating effectiveness, component resistance to degradation, with a minimum of parts replacement and maintenance.

The various features of the invention with its basic design geometry will be more apparent from the following description and drawings which illustrate the preferred embodiment. It should be understood that variations may be made in the specific components, without departing from the spirit and scope of the invention as described and illustrated.

Referring to the Drawings:

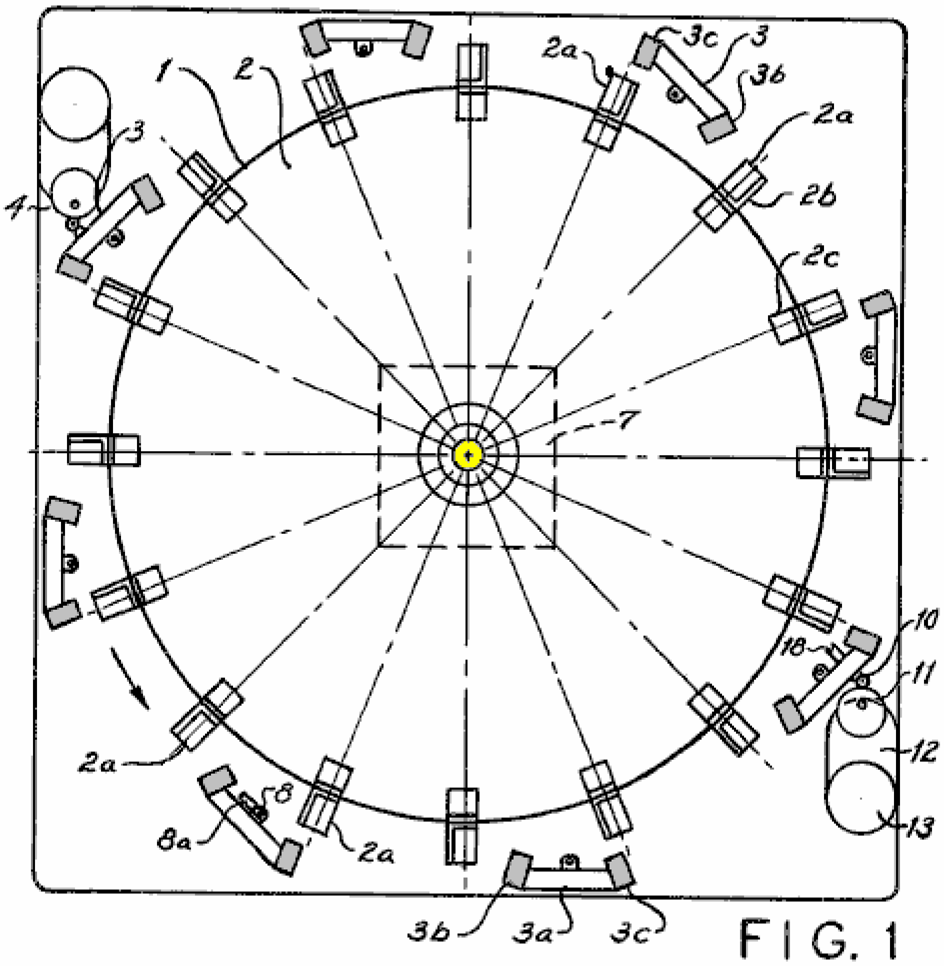

FIG. 1

Fig.1 is a top, external view of the magnetic disc drive.

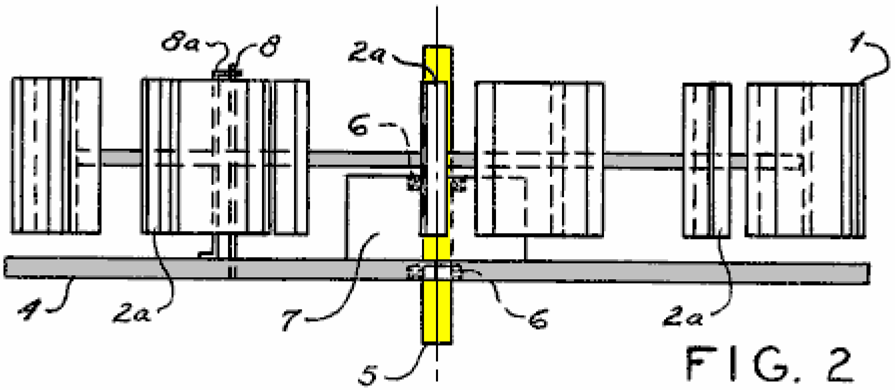

FIG. 2

Fig.2 is an external side view of the magnetic disc drive.

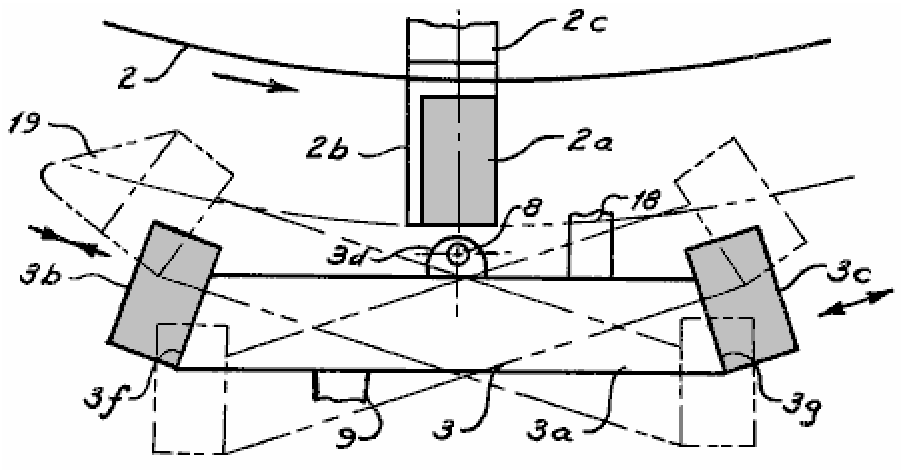

FIG. 3

Fig.3 is an enlarged top view of one oscillating magnet couple.

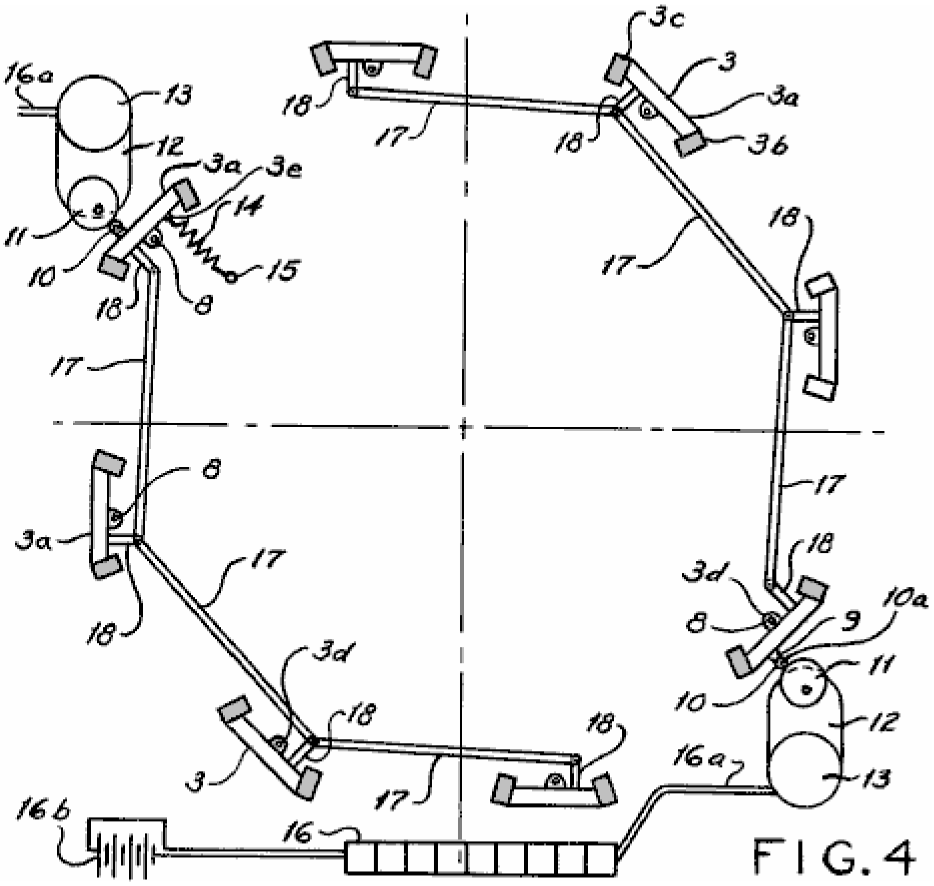

FIG.4

Fig.4 is a top, break-away view of several oscillating magnet pairs connected together with linkage.

DESCRIPTION OF THE PREFERRED EMBODIMENT

The invention **1**, is comprised of two basic components: a large driven disc **2**, and multiple oscillating magnet pairs **3**, which are closely interrelated and mounted on a common base plate **4**.

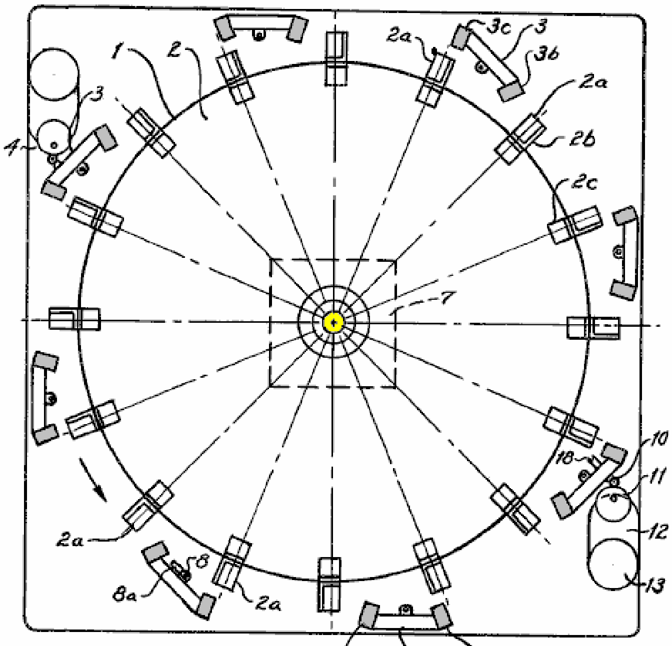

FIG. 1

Multiple, identical permanent magnets **2a**, are equally spaced around the periphery of the large driven disc **2**, by means of support angles **2b**, and angle brackets **2c**, which are secured to the disc **2**, with standard hardware.

A drive shaft **5**, is fastened to the disc **2**, by means of a hub **2d**, and supported by two ball bearings **6**. One of the ball bearings **6**, is fitted into a bore within the base plate **4**, while the other ball bearing **6**, is fitted into a box-base **7**, which is fastened to the base plate **4**, with standard hardware.

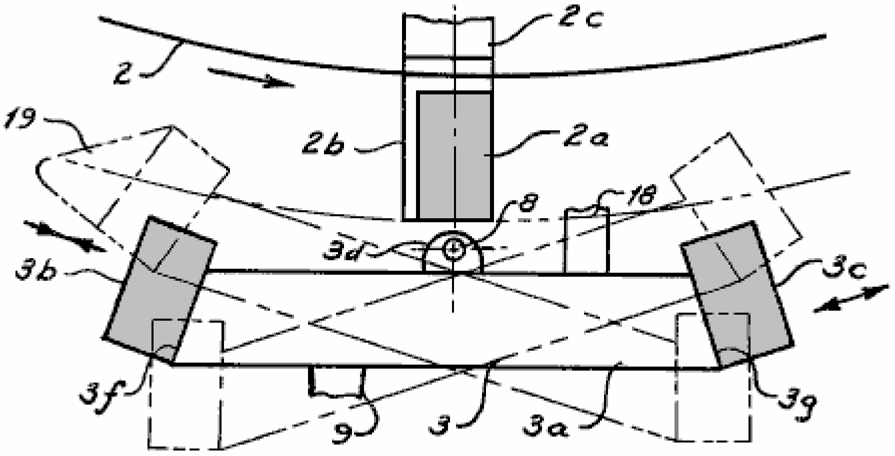

FIG. 3

The multiple oscillating magnet pairs **3**, are a flat, non-magnetic plate **3a**, with opposite pole magnet segments **3b** and **3c**, respectively, attached to the side of the flat oscillation plate **3a**. Two pivot brackets **3d**, are attached to the top and bottom of the flat plate **3a**, which pivot the oscillation plate **3a**, on the pivot rod **8**. One end of the pivot rod **8**, is fitted into the base plate **4**, and the opposite end is supported by an elongated Z-shaped bracket **8a**.

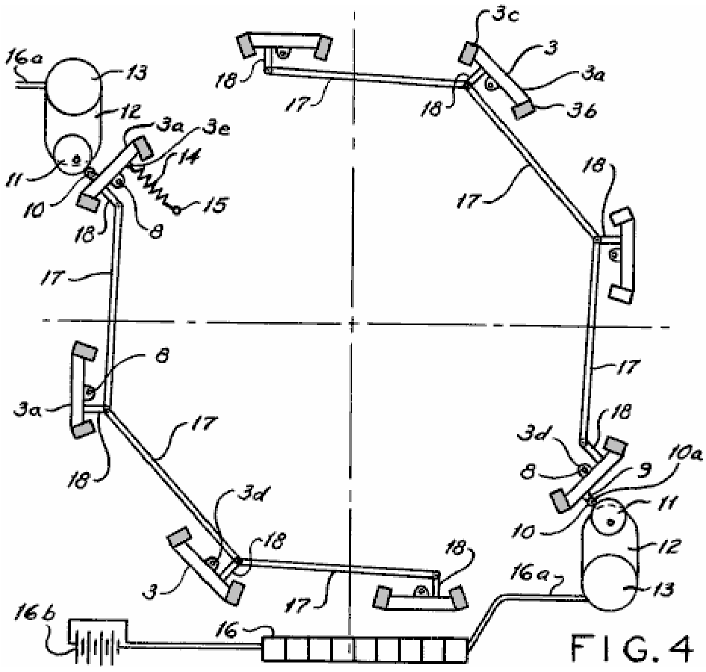

FIG. 4

An arm **9**, is fastened to a flat face of the flat plate **3a**, which supports the pin **10a**, which carries the ball bearing **10**, as it rolls on the eccentric disc **11**. The off-centre disc **11**, is fastened to the slow speed shaft of the gear reduction unit **12**, which is driven by the small DC motor **13**. A return tension spring **14**, is connected to the oscillation plate **3a**, by eyelet **3e**. The opposite end of the return tension spring **14**, is retained by the post **15**, which is pressed into the base plate **4**. Motors **13**, are powered by multiple arrays of silicon photovoltaic solar cells **16**. Electrical leads **16a**, conduct solar converted electricity to the motors **13**, with any excess current stored in the batteries **16b**.

The motor driven oscillation stations become the master stations for this invention **1**, from which three to five slave oscillation stations are driven. The reciprocating motion is transmitted by straight links **17**, which are pinned to the link arms **18**, which in turn are secured to the flat plates **3a**.

All of the slave oscillation stations must be precisely adjusted to exactly the same angular position as the master driving oscillation station so that all stations are synchronised to allow proper functioning of the rotating disc **2**.

For very large discs **2**, with many disc magnets, several master oscillation stations, with a fixed number of slave oscillation stations will be required. All of the master oscillation driving-stations will have to be electrically synchronised to maintain overall synchronisation, with all of the eccentrics **11**, set at the same angle at start-up of the disc.

Either end of the drive shaft **5**, may be connected with a speed step-up belt drive arrangement, which is not shown here.

Plastic deflectors **19**, are added to either side of the oscillation plates **3a**, adjacent to the opposite magnets segments **3b**, and **3c**, their exact position depending on the direction of rotation of disc **2**. These act as an anti-jamming device for the magnets.

Magnetic field bias angles **3f** and **3g** (**Fig.3**), are required for the sides of plates **3a**, in order to assure an optimum "pull-push" sequence on the large drive disc **2**, as the magnetic oscillation pairs **3**, are actuated. The bias angle **3f**, is matched to the magnet segment **3b**, while bias angle **3g** is matched to magnet segment **3c**.

None of the load components which are external to the device, such as an electric generator or alternator, are shown as a part of this invention, since a variety of load devices and arrangements are possible for the magnetic disc drive.

Bob Neal’s Compressed Air Engine

US Patent 2,030,759 **11th Feb. 1936** **Inventor: Bob Neal**

COMPRESSOR UNIT

This invention relates to the construction of a compressor, and more particularly to a combined fluid-operated engine and compressor.

The primary object of the invention, is the provision of a compressor of this character, wherein there is arranged an automatically counterbalanced crankshaft and fluid equalisers within a storage tank, which makes it possible for the engine to operate on constant reserve tank pressure, so as to actuate additional equipment, the pistons for the engine also being automatically balanced and suspended when the engine is operating.

Another object of the invention is the provision of an engine which is operated by air under pressure, the air being supplied by compressors which are in a bank with the engine construction.

A further object of this invention is the provision of an engine of this type of novel construction as the engine and the compressors are operated from the same crankshaft, which is of the automatically balanced type, so that high efficiency is attained.

A still further object of the invention is the provision of an engine of this character which is comparatively simple in construction, thoroughly reliable and efficient in its operation, strong, durable, and inexpensive to manufacture.

With these and other objects in view, the invention consists in the features of construction, combination and arrangement of parts as will be described more fully here, illustrated in the accompanying drawings which disclose the preferred embodiment of the invention, and pointed out in the appended Claim.

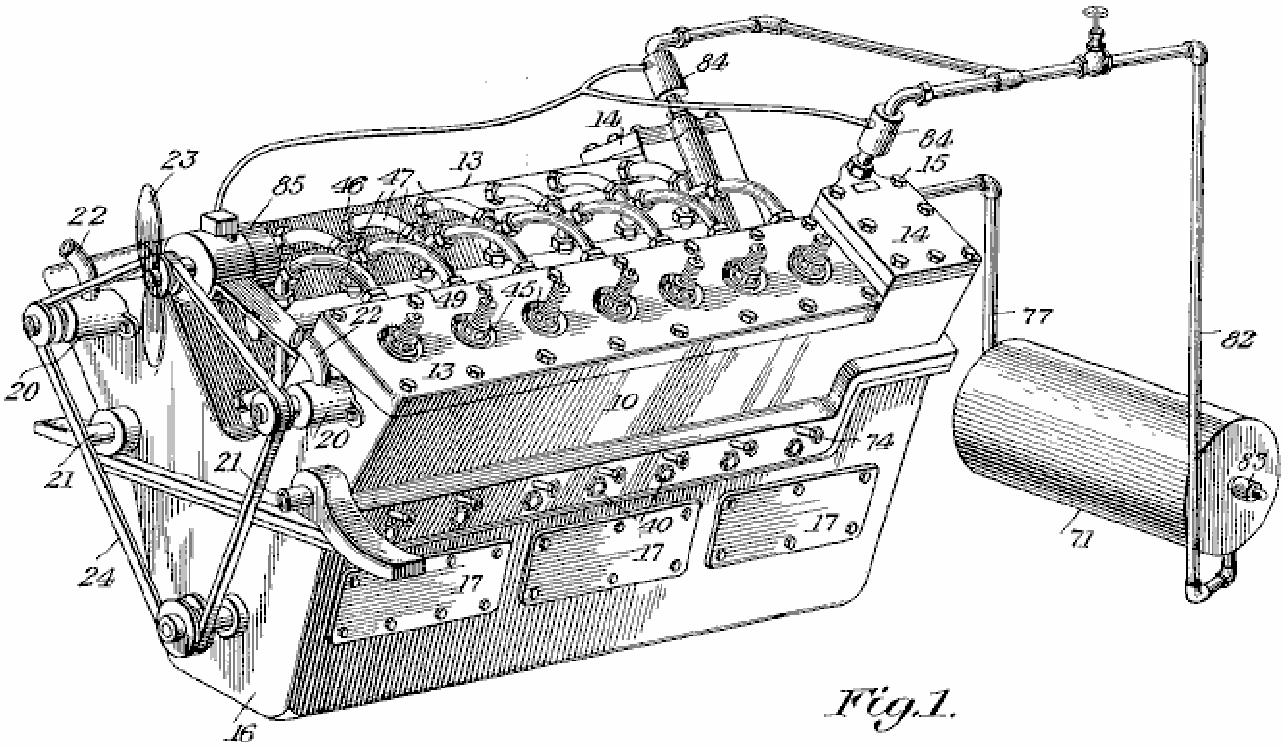

Fig.1.

In the drawings, **Fig.1** is a perspective view of the engine constructed in accordance with the invention.

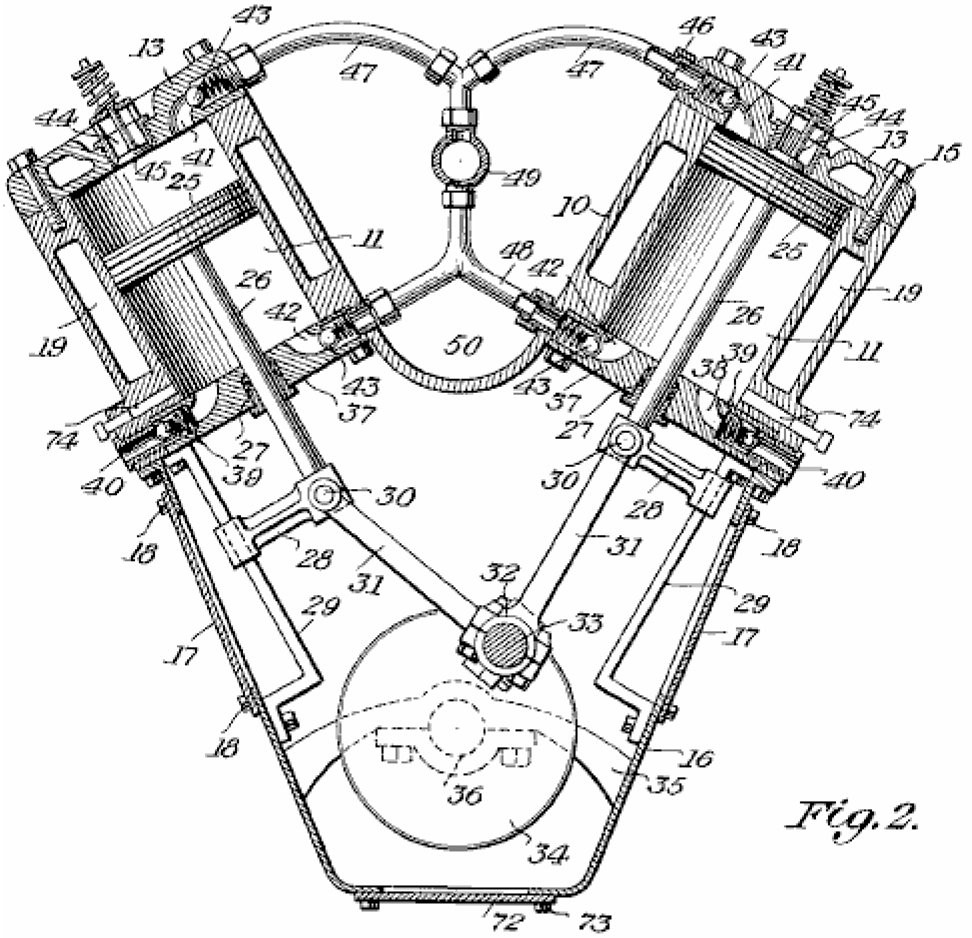

Fig.2.

Fig.2 is a vertical transverse cross-section view through the compressor part of the engine.

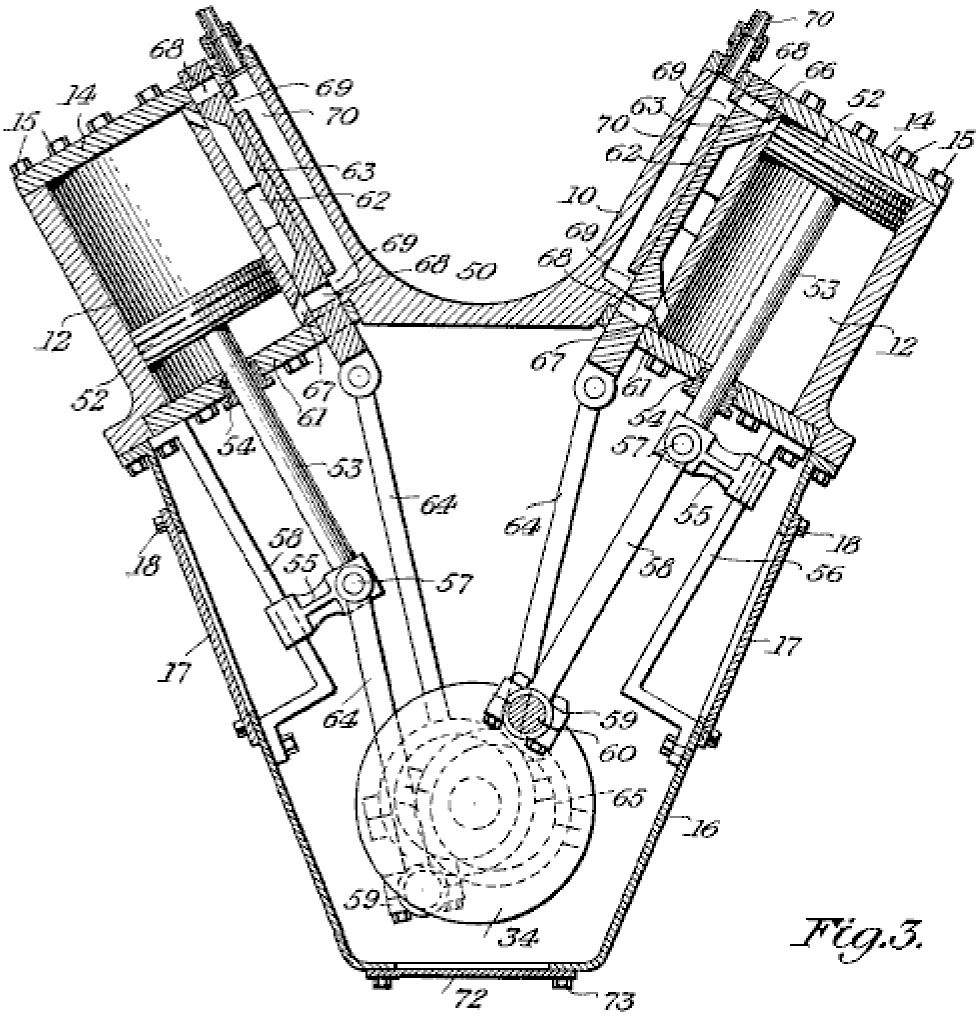

Fig.3.

Fig.3 is a vertical cross-sectional view through the power part of the engine.

Fig.4.

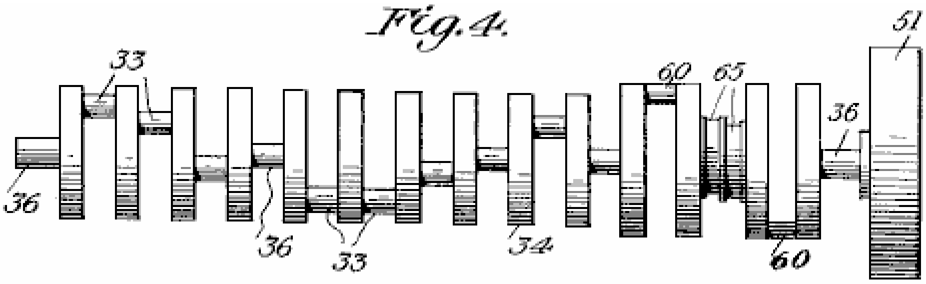

Fig.4 is a detail elevation of the crankshaft of the engine.

Fig.5.

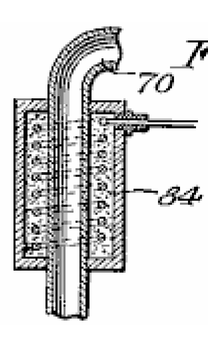

Fig.5 is an enlarged cross-sectional view through one of the electric heaters for the engine.

Fig.6.

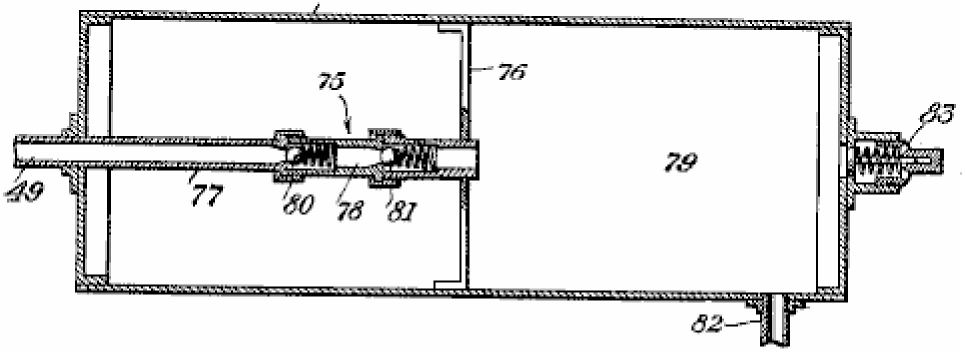

Fig.6 is a vertical, longitudinal, cross-sectional view through the air storage tank, including the equaliser.

The same reference numbers are used for each individual part in every view in every drawing.

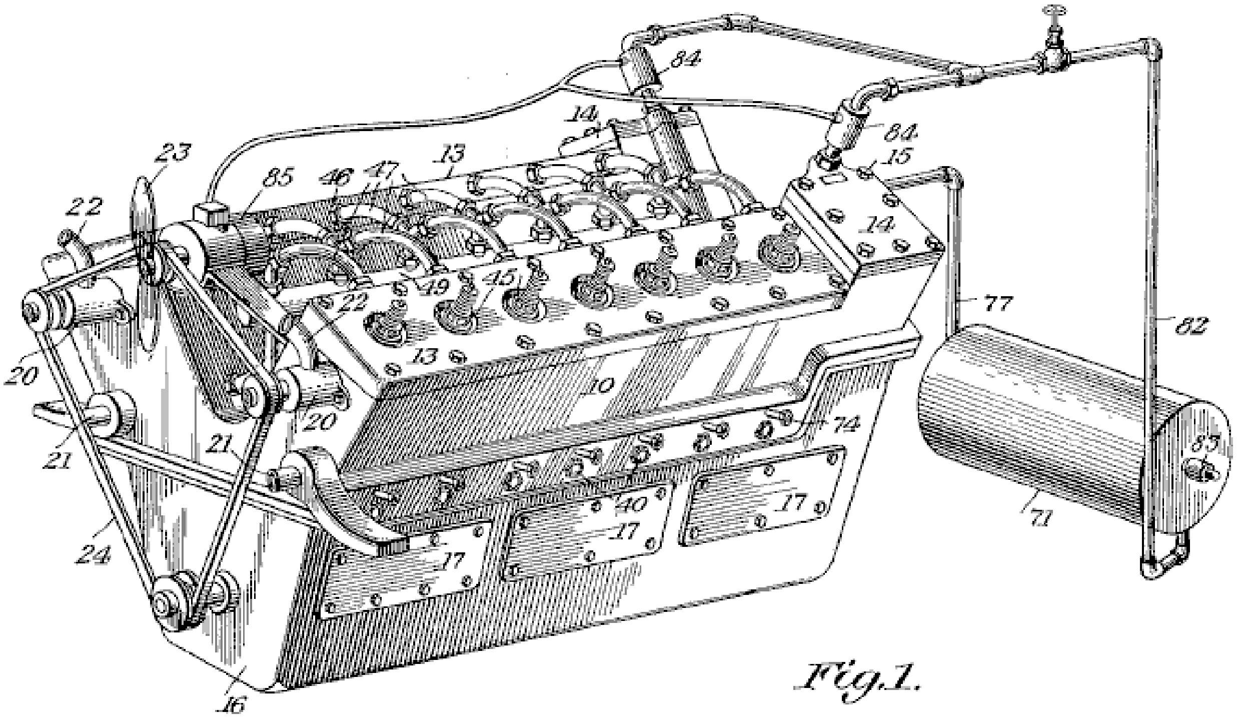

Fig.1.

Referring to the drawings in detail, the engine in its entirety, composes a cylinder block **10** having inside it, the series of compressor cylinders **11** and the power cylinders **12**. The block **10** is of the V-type and the upper ends of the cylinders are closed off by the removable heads **13** and **14** which are held in place by conventional head bolts **15**. Beneath block **10** is the crank case **16**, which has detachable plates **17** at opposite sides, held in place by fasteners **18**, and seated so as to be leak proof. The block **10** is chambered to provide a water jacket **19** surrounding the cylinders, while at the forward end of the block are water pumps **20**, circulating water through the inlet pipe **21** which leads into the jacket and the water exits from the jacket through the outlet pipe **22**. Beside the pumps **20**, is a fan 23 which is operated from the same belt **24** which drives the pumps.

Working inside the cylinders **11**,are the reciprocating pistons **25**, their rods **26** sliding through packing glands **27** and fixed to crossheads **28** which slide on their mounting guides **29** which are secured to the walls of the crank case **16**. These crossheads **28** are fitted with wrist pins **30**, forming a pivoting connection with the connecting rods **31**, which are connected to their cranks **33** by their bearings **32**. The cranks **33** form part of a counter balanced crankshaft **34**, which is mounted in supports **35** attached to the crank case **16**, the shaft being provided with the required bearings **36**.

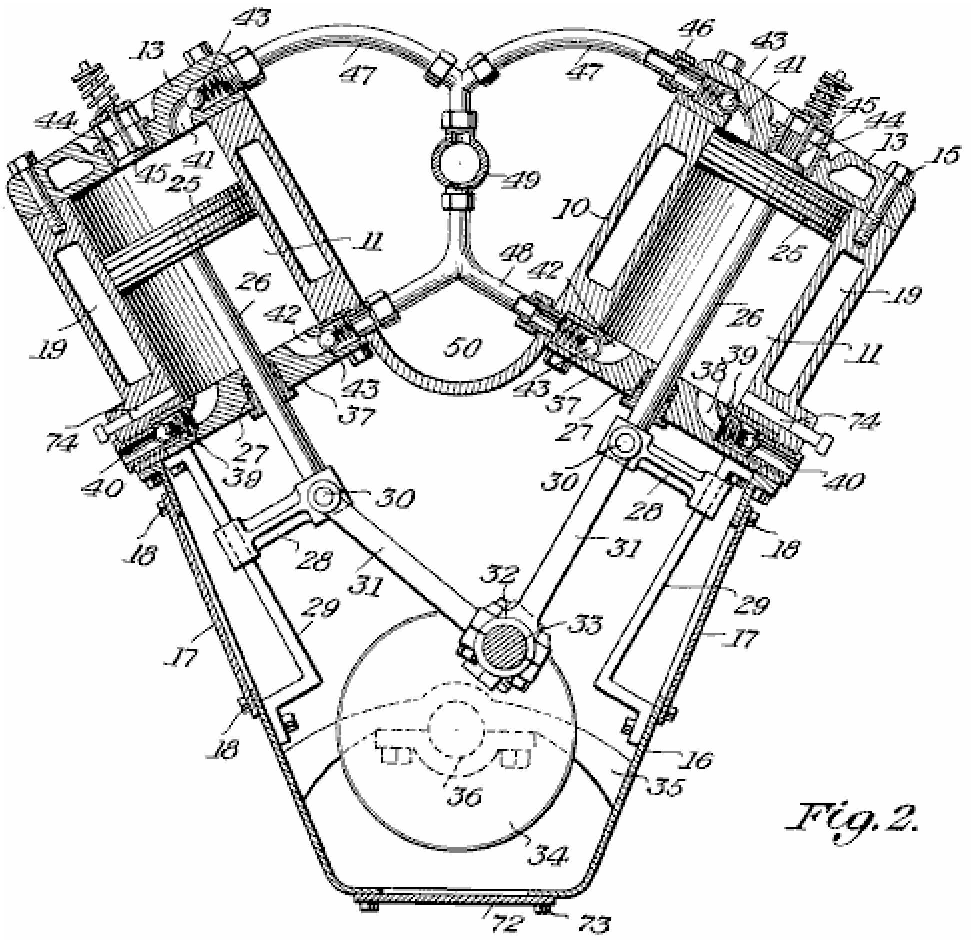

Fig. 2.

The inner ends of the cylinders **11** are fitted with inner end heads **37**, which are provided with air intake ports **38** fitted with spring ball inlet checks **39**, the air entering through passages **40** which open outside the block **10**. Glands **27** are mounted in the heads **37**.

The heads **13** and **37** are provided with the compressed air outlets **41** and **42**, which are fitted with spring ball checks **43**. The heads **13** are also provided with the central air inlets **44**, which are fitted with spring checks **45**. Couplings **46** attach the air outlets **41** and **42** to their outlet feed pipes **47** and **48**. These pipes lead to a main conduit **49** which is located in the centre channel **50** of the block **10**.

Fig. 4.

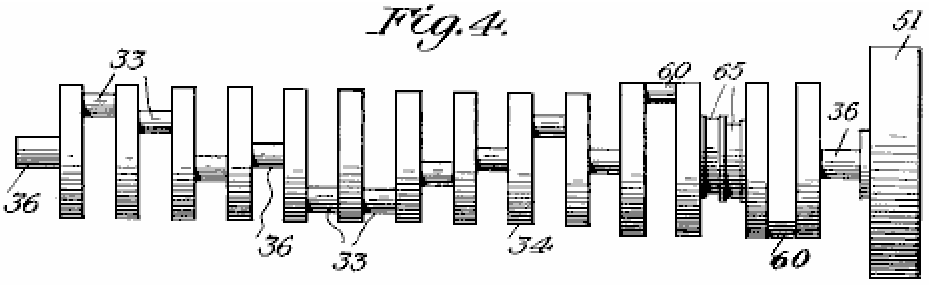

At the rear end of the block **10**, mounted on shaft **36**, there is a conventional flywheel **51**.

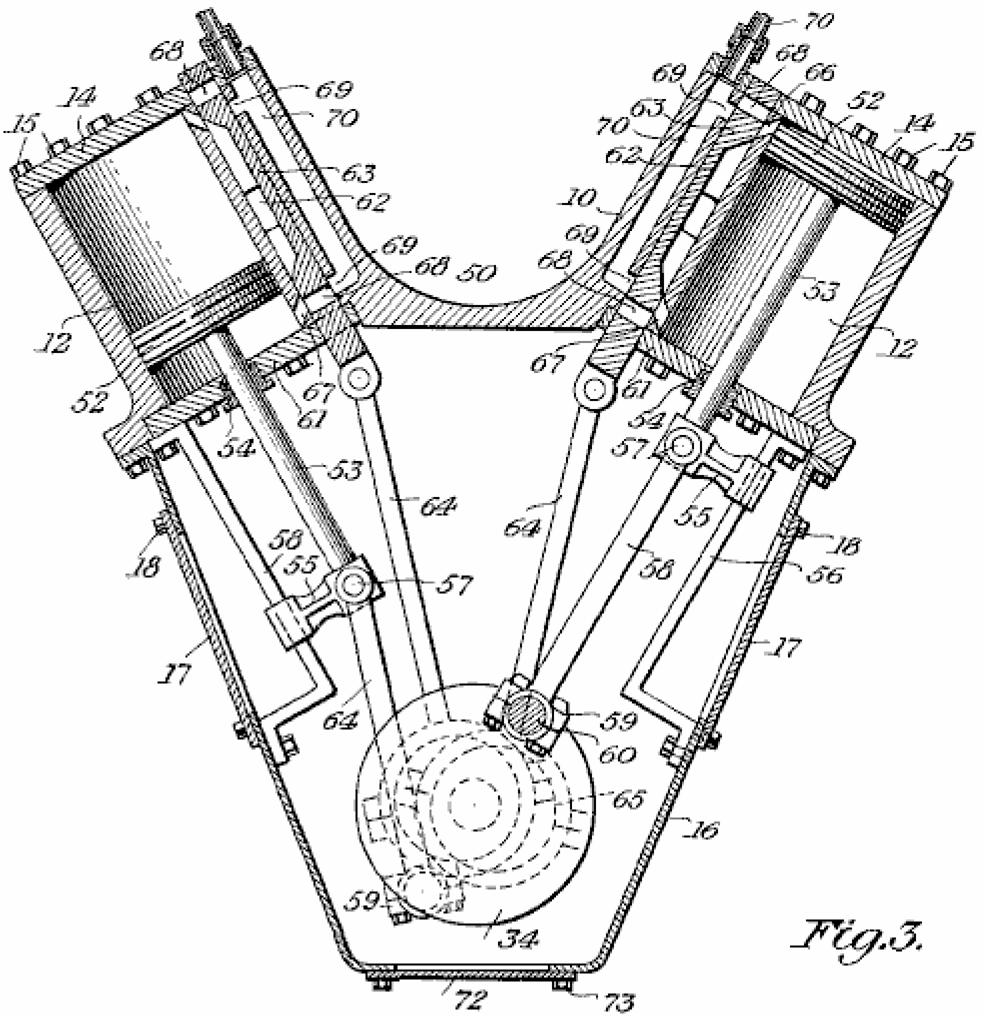

Fig.3.

Working inside the cylinders **12** are the pistons **52**, with their piston rods **53** sliding through packing glands **54** and fixed in crossheads **55** which slide along their mounting guides **56**, mounted on the inner walls of the crank case **16**. The crossheads **55** have wrist pins **57** which provide a pivoting joint for the connecting rods **58** which are connected by their bearings **59** to their cranks **60** of the crank shaft **34**, the inner ends of the cylinders **12** being closed by the inner heads **61** and their associated glands **54**.

On the cylinders **12** are slide valve chests **62** in which are the slide valves **63**, these being operated by throw rods **64** actuated by cams **65** and the valves controlling the admission and exhaust of air into and out of the cylinders **12**, through the ports **66** and **67**, and these valves **63** are provided with ports **68** for the delivery of air under pressure from the inlet passages **69** common to a pipe **70** coming from a compressed air storage tank **71**.

The bottom of the crank case **16** is fitted with a removable plate **72** which is secured in place by fasteners **73**, and when this plate is removed, it provides access to the crank shaft **34** and the bearings for the engine, as well as other parts inside the crank case.

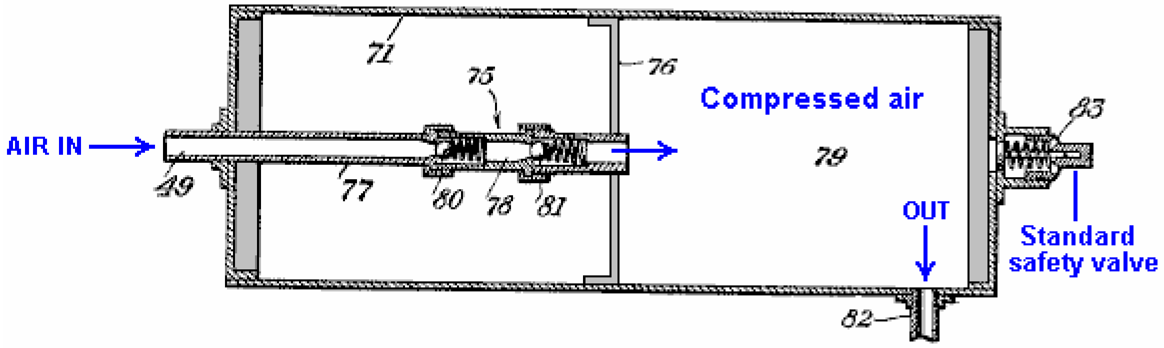

Leading into the cylinders **11** are the passages **74** of a lubricating system (not shown). The compressed air storage tank **71** has inside it a double-check discharge nozzle **75**, supported by member **76**. Leading to this equaliser is an air inlet pipe **77** which connects through its valved section **78** to the compressed air reservoir **79**.

In the equaliser **75**, are the spaced spring ball checks **80** and **81**, one being for the inlet side and the other for the outlet side of the equaliser. This pipe **77** is connected with the main conduit **49**, while a pipe **82** connects to pipe **70**. The tank is also fitted with an automatic relief valve **83** and this valve can be of any approved type.

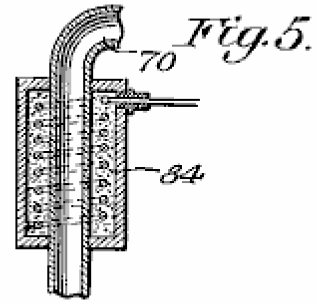

Placed around the pipes **70** which connect to the air passages **69** (**Fig.3**) are electric heating units **84** to heat the pressurised air to above freezing temperature when delivered from tank **71** to the cylinders **12**. Supported on the block **10** is an electric generator **85** which is driven from the shaft **34** (**Fig.2**) through a belt **24** (**Fig.1**) and this generator is included in an electric circuit which also has the heaters **84** so that these will operate from current supplied by the generator.

The compressed air storage tank **71** with the equaliser is constructed so that it is possible to pump air into it while it contains an air pressure of 200 pounds per square inch while the compressors are only pumping against 15 pounds per square inch of (atmospheric) pressure. An outside air pressure source can be coupled with the tank to augment that pressure derived from the cylinders **11** of the engine.

CLAIMS

What is claimed is:
In a structure of the kind described, a V-shaped cylinder block provided with upwardly divergent cylinders, end heads fitted to said cylinders at opposite ends thereof, each head having valved inlets and outlets, a main outlet lead between the cylinders of the block for a storage tank and having lateral branches to the outlets at the inner sides of said heads, one inlet being located at the centre of each head at the outer ends of said cylinders while the remaining inlets are at the outer sides of the heads at the inner ends of said cylinders, a substantially V-shaped crank case fitted to the block beneath the cylinders, a counterbalanced crank shaft journaled in the crank case, pistons operating in the cylinders and having rods extended into the crank case, crosshead guides fitted to the interior sides of said case, crossheads connecting the rods with the guides and sliding on them and connecting rods operated by the crank shaft and pivoted at the crossheads in order to allow reciprocation of the pistons.

Leroy K. Rogers' Compressed Air Engine

Patent US 4,292,804 6th October 1980 Inventor: Leroy K. Rogers

METHOD AND APPARATUS FOR OPERATING AN ENGINE ON COMPRESSED GAS

ABSTRACT

The present invention relates to a method and apparatus for operating an engine having a cylinder containing a reciprocating piston driven by a compressed gas. The apparatus comprises a source of compressed gas connected to a distributor which conveys the compressed gas to the cylinder. A valve is provided to admit compressed gas to the cylinder when the piston is in an approximately Top Dead Centre position.

In one embodiment of the present invention, the timing of the opening of the valve is advanced so that the compressed gas is admitted to the cylinder progressively further before the Top Dead Centre position of the piston as the speed of the engine increases.

In a further embodiment of the present invention, a valve actuator is provided which increases the length of time over which the valve remains open to admit compressed gas to the cylinder as the speed of the engine increases.

A still further embodiment of the present invention relates to an apparatus for adapting a conventional internal combustion engine for operation on compressed gas.

US Patent References:

3,881,399	May., 1975	Sagi et al.	91/187.
3,885,387	May., 1975	Simington	60/407.
4,018,050	Apr., 1977	Murphy	60/412.

DESCRIPTION

BACKGROUND AND SUMMARY OF THE PRESENT INVENTION

The present invention is a method and apparatus for operating an engine using a compressed gas as the motive fluid. More particularly, the present invention relates to a apparatus for adapting a pre-existing internal combustion engine for operation on a compressed gas.

Air pollution is one of the most serious problems facing the world today. One of the major contributors to air pollution is the ordinary internal combustion engine which is used in most motor vehicles today. Various devices, including many items required by legislation, have been proposed in an attempt to limit the pollutants which an internal combustion engine exhausts to the air. However, most of these devices have met with limited success and are often both prohibitively expensive and complex. A clean alternative to the internal combustion engine is needed to power vehicles and other machinery.

A compressed gas, preferably air, would provide an ideal motive fluid for an engine, since it would eliminate the usual pollutants exhausted from an internal combustion engine. An apparatus for converting an internal combustion engine for operation on compressed air is disclosed in U.S. Pat. No. 3,885,387 issued May 27, 1975 to Simington. The Simington patent discloses an apparatus including a source of compressed air and a rotating valve actuator which opens and closes a plurality of mechanical poppet valves. The valves deliver compressed air in timed sequence to the cylinders of an engine through adapters located in the spark plug holes. However, the output speed of an engine of this type is limited by the speed of the mechanical valves and the fact that the length of time over which each of the valves remains open cannot be varied as the speed of the engine increases.

Another apparatus for converting an internal combustion engine for operation on steam or compressed air is disclosed in U.S. Pat. No. 4,102,130 issued July 25, 1978 to Stricklin. The Stricklin patent discloses a device which changes the valve timing of a conventional four stroke engine such that the intake and exhaust valves open once for every revolution of the engine instead of once every other revolution of the engine. A reversing valve is provided which delivers live steam or compressed air to the intake valves and is subsequently reversed to allow the exhaust valves to deliver the expanded steam or air to the atmosphere. A reversing valve of this type however does not provide a reliable apparatus for varying the amount of motive fluid injected into the cylinders when it is desired to increase the speed of the engine. Further, a device of the type disclosed in the Stricklin patent requires the use of multiple reversing valves if the cylinders in a multi-cylinder engine were to be fired sequentially.

Therefore, it is an object of the present invention to provide a reliable method and apparatus for operating an engine or converting an engine for operation with a compressed gas.

A further object of the present invention is to provide a method and apparatus which is effective to deliver a constantly increasing amount of compressed gas to an engine as the speed of the engine increases.

A still further object of the present invention is to provide a method and apparatus which will operate an engine using compressed gas at a speed sufficient to drive a conventional automobile at highway speeds.

It is still a further object of the present invention to provide a method and apparatus which is readily adaptable to a standard internal combustion engine, to convert the internal combustion engine for operation with a compressed gas.

Another object of the invention is to provide a method and apparatus which utilises cool expanded gas, exhausted from a compressed gas engine, to operate an air-conditioning unit and/or an oil-cooler.

These and other objects are realised by the method and apparatus of the present invention for operating an engine having at least one cylinder containing a reciprocating piston and using compressed gas as the motive fluid. The apparatus includes a source of compressed gas, a distributor connected it for conveying the compressed gas to the cylinder or cylinders. A valve is provided for admitting the compressed gas to the cylinder when the piston is in an approximately Top Dead Centre position within the cylinder. An exhaust is provided for exhausting the expanded gas from the cylinder as the piston returns to approximately the Top Dead Centre position.

In a preferred embodiment of the present invention, a device is provided for varying the duration of each engine cycle over which the valve remains open to admit compressed gas to the cylinder, dependent upon the speed of the engine. In a further preferred embodiment of the present invention, an apparatus for advancing the timing of the opening of the valve is arranged to admit the compressed gas to the cylinder progressively further and further before the Top Dead Centre position of the piston, as the speed of the engine increases.

Further features of the present invention include a valve for controlling the amount of compressed gas admitted to the distributor. Also, a portion of the gas which has been expanded in the cylinder and exhausted through the exhaust valve, is delivered to a compressor to be compressed again and returned to the source of compressed gas. A gear train can be engaged to drive the compressor selectively at different operating speeds, depending upon the pressure maintained at the source of compressed air and/or the speed of the engine. Still further, a second portion of the exhaust gas is used to cool a lubricating fluid for the engine or to operate an air-conditioning unit.

In a preferred embodiment of the present invention, the valve for admitting compressed gas to the cylinder is operated electrically. The device for varying the duration of each engine cycle, over which the intake valve remains open, as the speed of the engine increases, comprises a rotating element whose effective length increases as the speed of the engine increases, causing a first contact on the rotating element to be electrically connected to a second contact on the rotating element, for a longer period of each engine cycle. The second contact operates the valve causing it to remain in an open position for a longer period of each engine cycle, as the speed of the engine increases.

Still further features of the present invention include an adaptor plate for supporting the distributor above the intake manifold of a conventional internal combustion engine after a carburettor has been removed to allow air to enter the cylinders of the engine through the intake manifold and conventional intake valves. Another adaptor plate is arranged over an exhaust passageway of the internal combustion engine to reduce the cross-sectional area of the exhaust passageway.

BRIEF DESCRIPTION OF THE DRAWINGS

Preferred embodiments of a method and apparatus for operating an engine according to the present invention will be described with reference to the accompanying drawings in which components have the same reference numbers in each drawing.

Fig.1 is a schematic representation of an apparatus according to the present invention arranged on an engine:

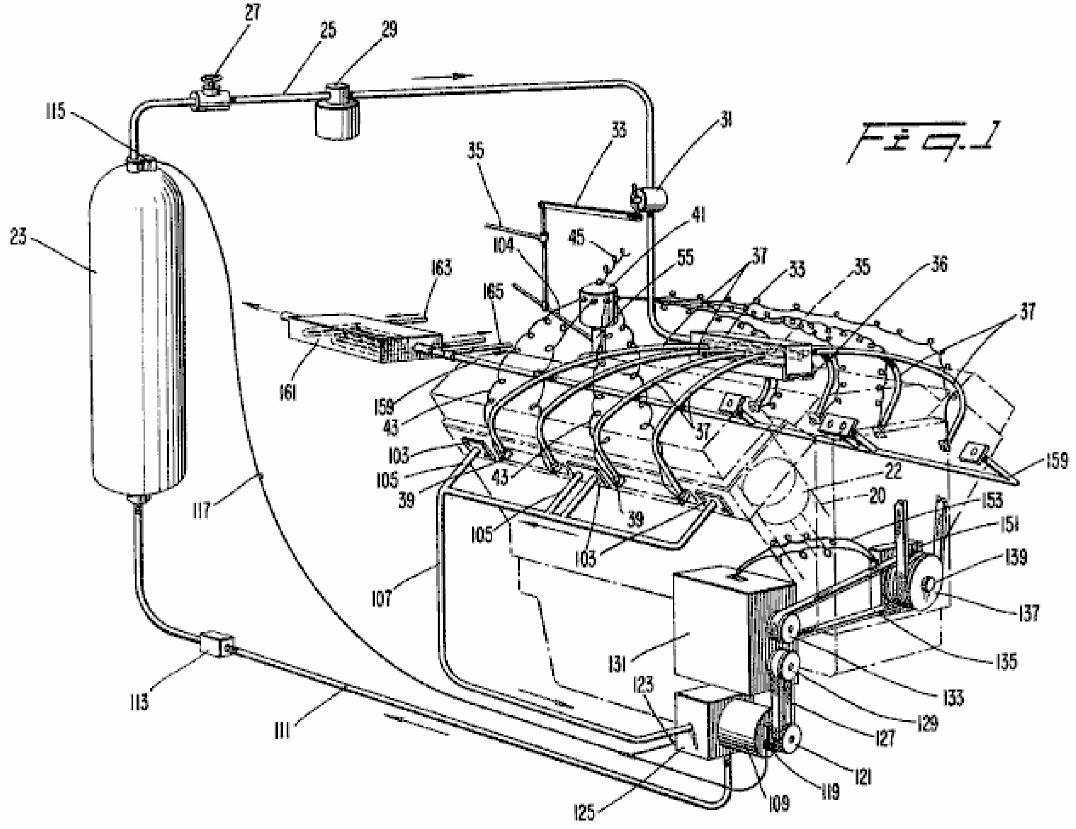

Fig.1

Fig.2 is a side view of one embodiment of a valve actuator according to the present invention.

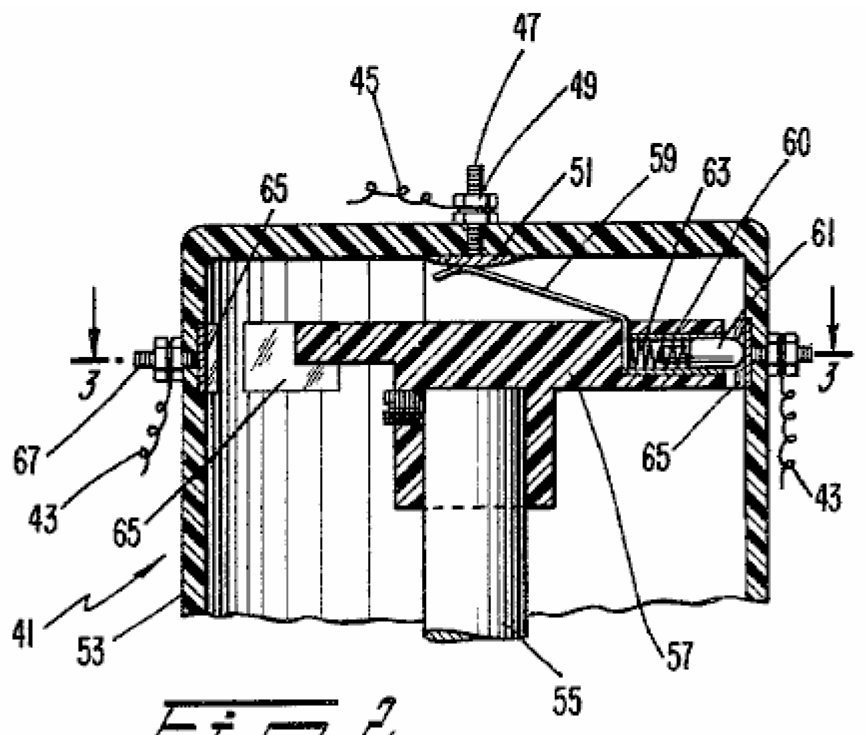

Fig.2

Fig.3 is a cross-sectional view taken along the line **3--3** in **Fig.2**.

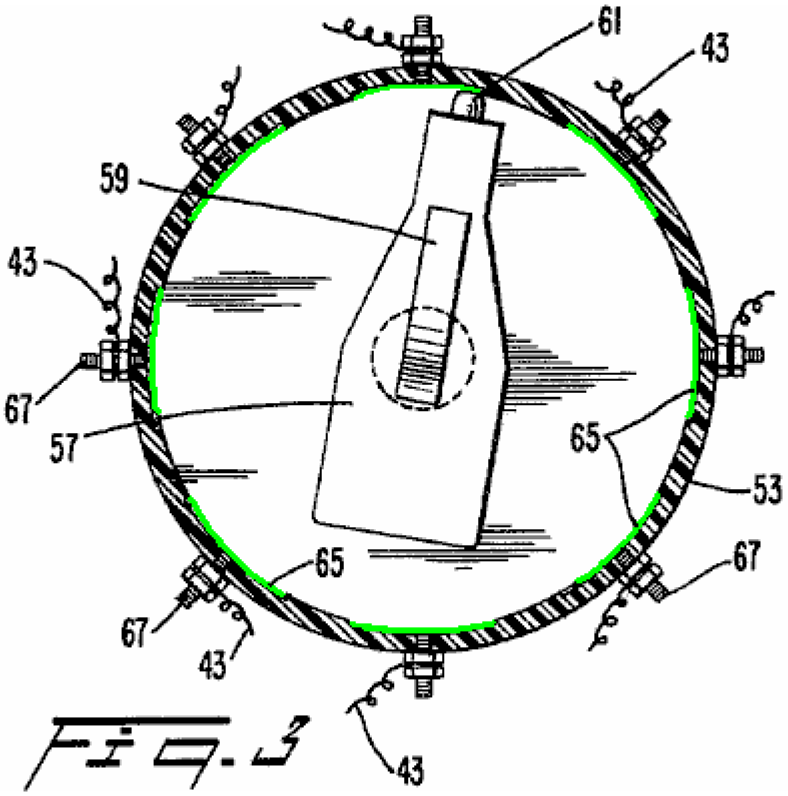

Fig.3

Fig.4 is a cross-sectional view of a second embodiment of a valve actuator according to the present invention.

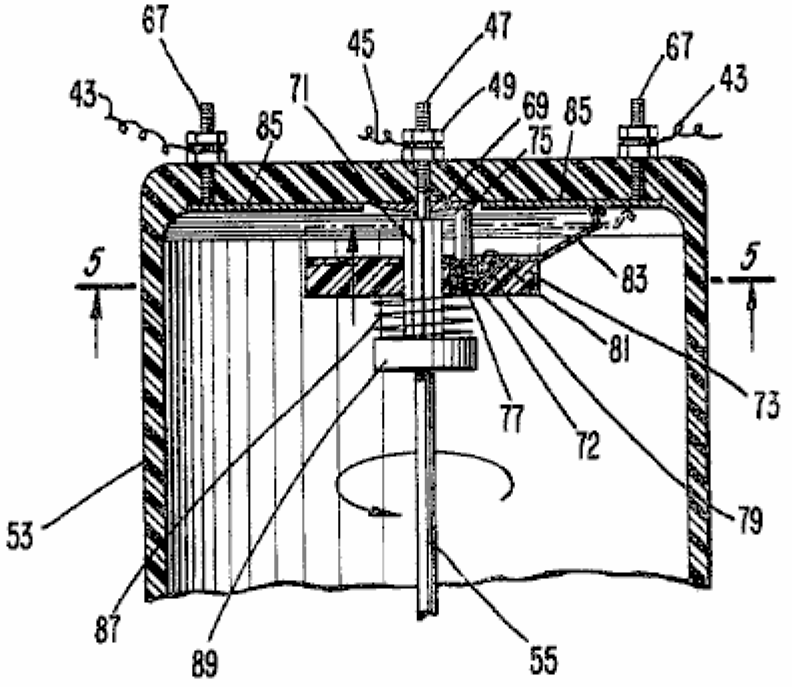

Fig.4

Fig.5 is a view taken along the line **5--5** in **Fig.4**.

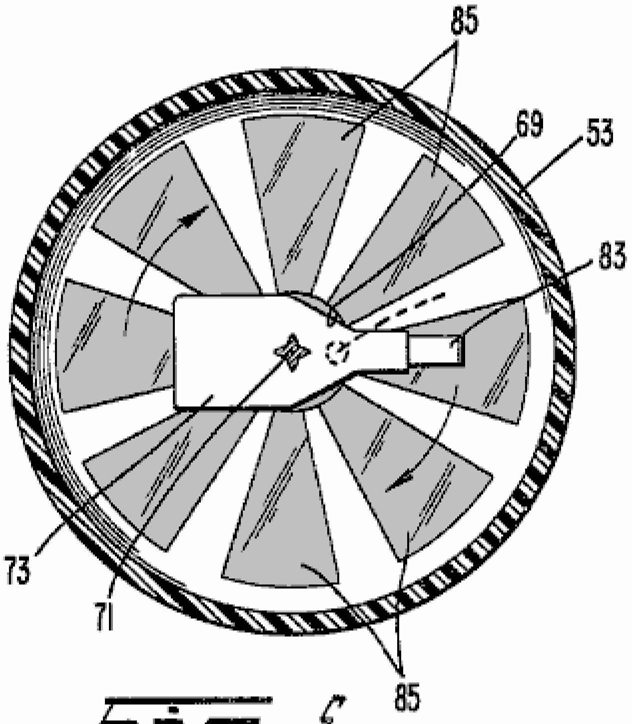

Fig. 5

Fig.6 is a cross-sectional view of a third embodiment of a valve actuator according to the present invention;

Fig. 6

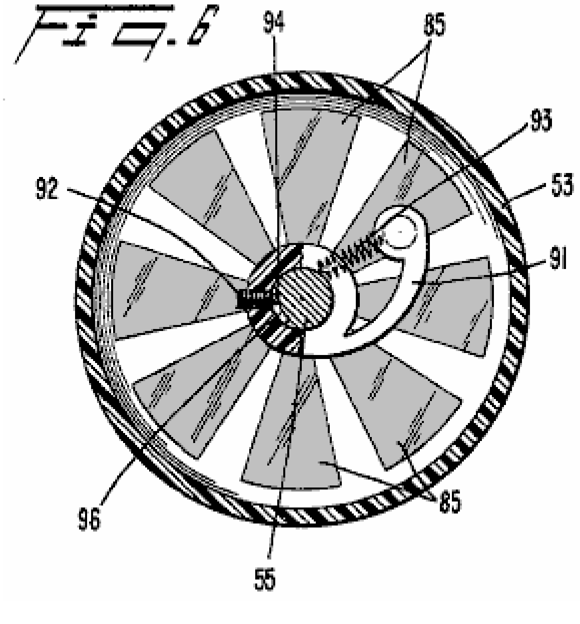

Fig.7 is a view taken along the line **7--7** in **Fig.6**.

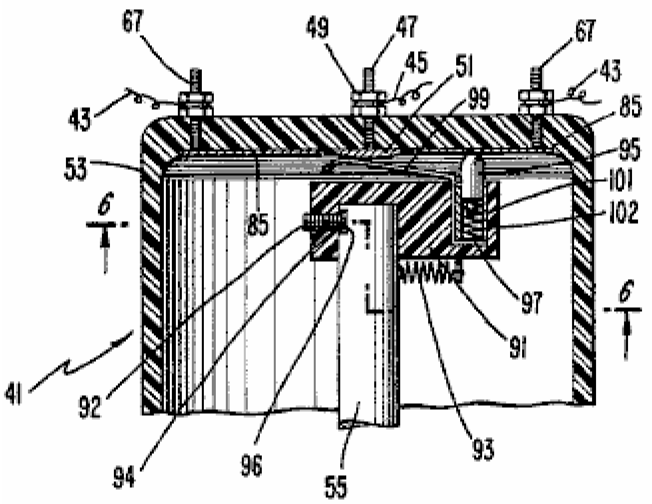
67
49
47
45
51
99
67
43
43
85
53
95
101
102
6
85
6
97
91
41
92
93
94
96
55

Fig-7

Fig.8 is a cross-sectional view of a gearing unit to drive a compressor according to the present invention.

Fig. 8

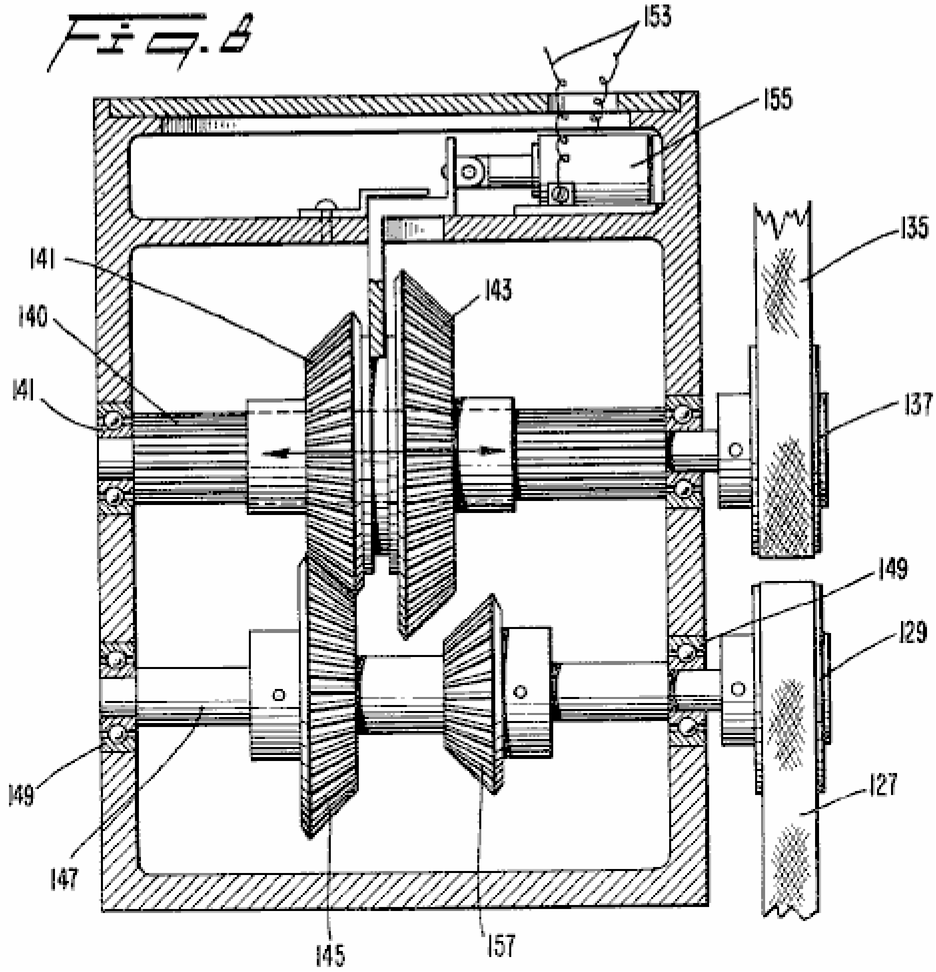

DETAILED DESCRIPTION OF THE PREFERRED EMBODIMENTS

With reference to **Fig.1**, an engine block **21** (shown in phantom) having two banks of cylinders with each bank including cylinders **20** having pistons **22** which reciprocate in them in a conventional manner (only one of which is shown in phantom). While the illustrated engine is a V-8 engine, it will be apparent that the present invention is applicable to an engine having any number of pistons and cylinders with the V-8 engine being utilised for illustration purposes only. A compressed gas tank **23** is provided to store a compressed gas at high pressure. It may also be desirable to include a small electric or gas compressor to provide compressed gas to supplement the compressed gas held in the tank **23**. In a preferred embodiment, the compressed gas is air which can be obtained from any suitable source.

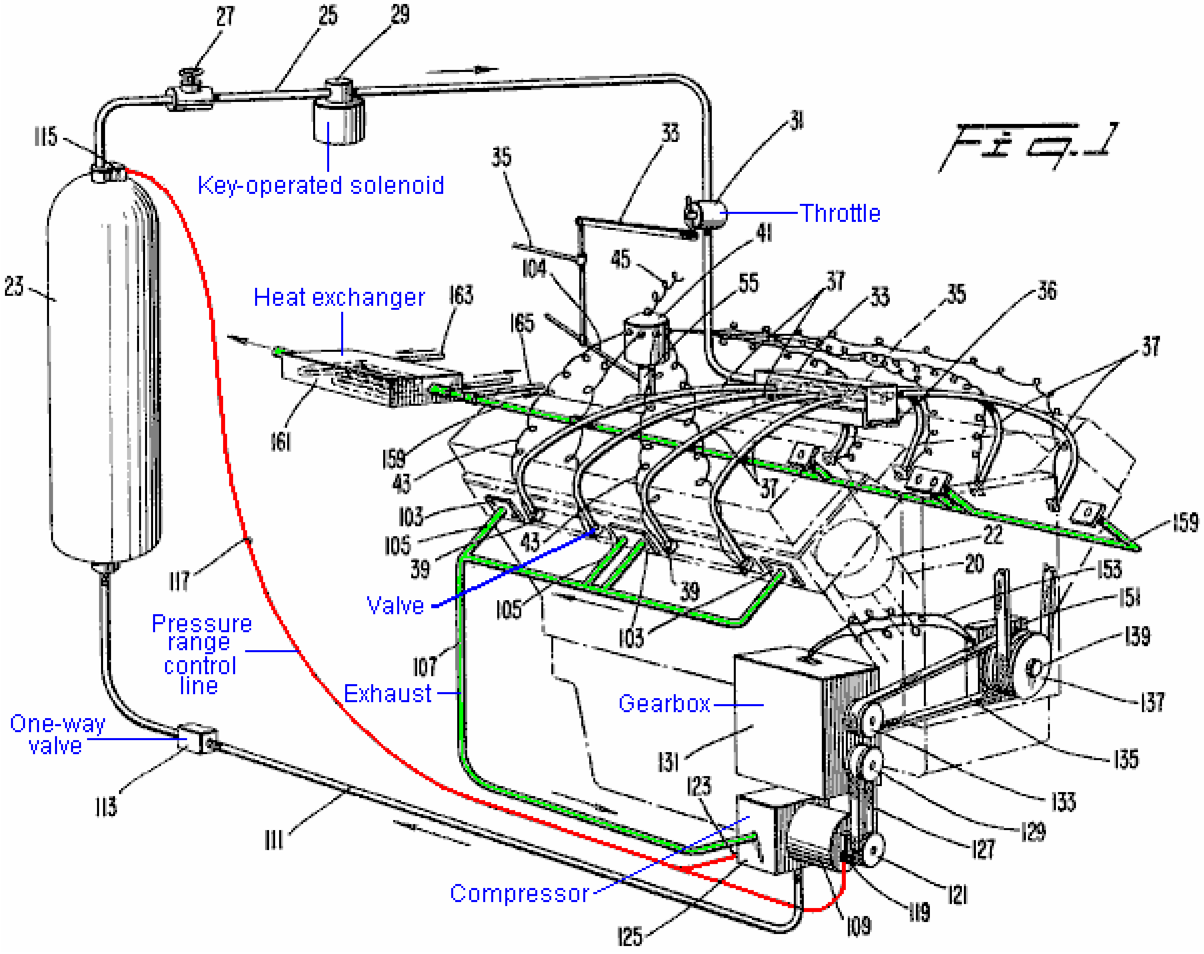

A line **25** transports the gas withdrawn from the tank **23** when a conventional shut-off valve **27** is open. In addition, a solenoid valve **29** preferably operated by a suitable key-operated engine switch (not shown) is also placed in the line **25**. In normal operation, the valve **27** is maintained open at all times with the solenoid valve **29** operating as a selective shut off valve to start and stop the engine **21**.

A suitable regulating valve **31** is arranged downstream of the solenoid valve **29** and is connected by a linkage **33** to a throttle linkage **35** which is operator-actuated by any suitable apparatus such as a foot pedal (not shown). The line **25** enters an end of a distributor **33** and is connected to an end of a pipe **35** which is closed at the other end. A plurality of holes, which are equal to the number of cylinders in the engine **21**, are provided on either side of the pipe **35** along the length of the pipe **35**.

When the present invention is used to adapt a conventional internal combustion engine for operation on compressed gas, an adaptor plate **36** is provided to support the distributor **33** in spaced relation from the usual intake opening in the intake manifold of the engine after a conventional carburettor has been removed. In this way, air is permitted to enter the internal combustion engine through the usual passageways and to be admitted to the cylinders through suitable intake valves (not shown). The adaptor plate **36** is attached to the engine block **21** and the distributor **33** by any suitable apparatus, e.g., bolts.

Each of the holes in the pipe **35** is connected in fluid-tight manner to a single line **37**. Each line **37** carries the compressed gas to a single cylinder **20**. In a preferred embodiment, each of the lines **37** is 1/2 inch high pressure plastic tubing attached through suitable connectors to the distributor **33** and the pipe **35**. Each of the lines **37** is connected to a valve **39** which is secured in an opening provided near the top of each of the cylinders **20**. In the case of a conversion of a standard internal combustion engine, the valves **39** can be conveniently screwed into a tapped hole in the cylinder **20** typically provided for a spark plug of the internal combustion engine. In a preferred embodiment, the valves **39** are solenoid actuated valves in order to provide a fast and reliable opening and closing of the valves **39**.

Each of the valves **39** is energised by a valve actuator **41** through one of a plurality of wires **43**. The valve actuator **41** is driven by a shaft of the engine similar to the drive for a conventional distributor of an internal combustion engine. That is, a shaft **55** of the valve actuator **41** is driven in synchronism with the engine **21** at one half the speed of the engine **21**.

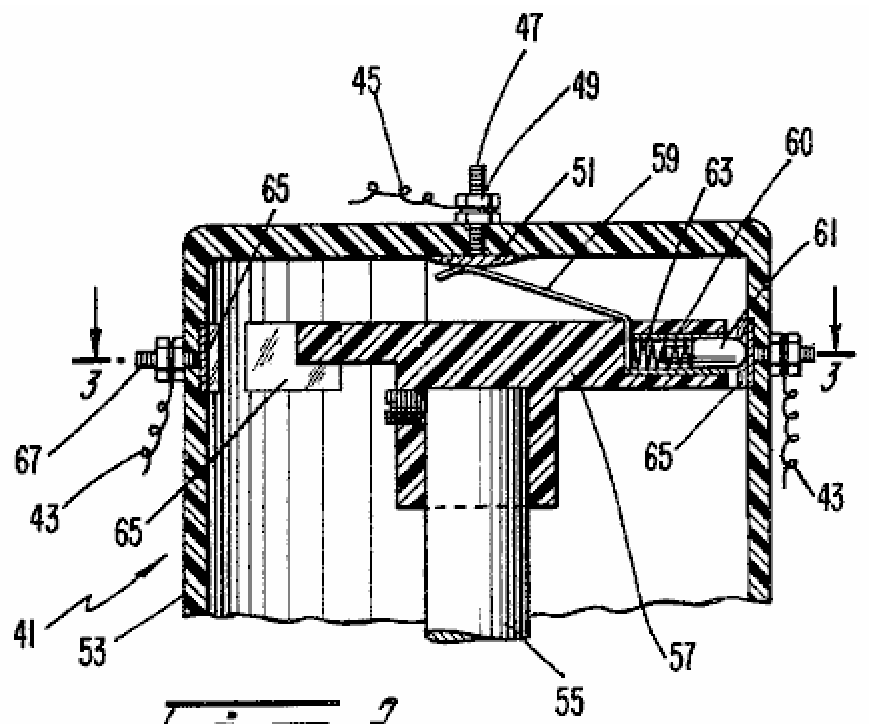

Fig.2

A first embodiment of the valve actuator **41** (**Fig.2** and **Fig.3**), receives electrical power through a wire **45** which is energised in a suitable manner by a battery, and a coil if necessary (not shown) as is conventional in an internal combustion engine. The wire **45** is attached to a central post **47** by a nut **49**. The post **47** is connected to a conducting plate **51** arranged in a housing **53** for the valve actuator **41**. Within the housing **53**, the shaft **55** has an insulating element **57** secured to an end of the shaft **55** and rotates with it when the shaft **55** is driven by the engine **21**. A first end of a flexible contact **59** is continuously biased against the conducting plate **51** to receive electricity from the battery or other suitable source. The other end of the contact **59** is connected to a conducting sleeve **60** which is in constant contact with a spring biased contact **61** which is arranged within the sleeve **60**. The contact **61** is pressed by a spring **63** which pushes contact **61** towards a side wall of the housing **53**.

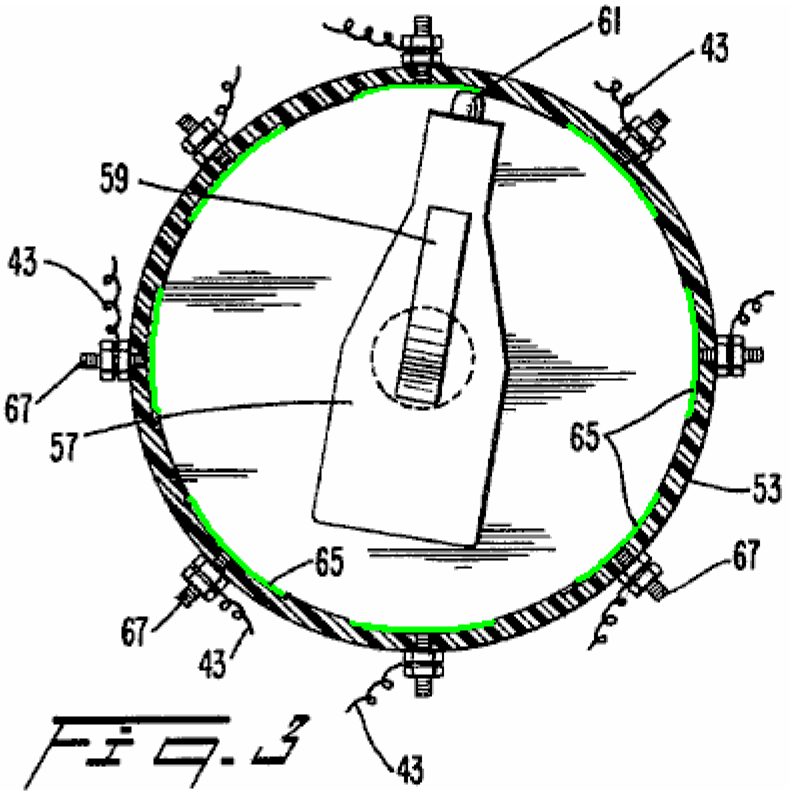

Fig.3

With reference to **Fig.3**, a plurality of contacts **65** are spaced from one another and are arranged around the periphery of the housing **53** at the same level as the spring biased contact **61**. Each contact **65** is electrically connected to a post **67** which extends outside of the housing **53**. The number of contacts **65** is equal to the number of cylinders in the engine **21**. One of the wires **43**, which actuate the valves **39**, is secured to each of the posts **67**.

In operation, as the shaft **55** rotates in synchronism with the engine **21**, the insulating element **57** rotates and electricity is ultimately delivered to successive pairs of the contacts **65** and wires **43** through the spring loaded contact **61** and the flexible contact **59**. In this way, each of the electrical valves **39** is activated and opened in the proper timed sequence to admit compressed gas to each of the cylinders **20** to drive the pistons **22** on a downward stroke.

The embodiment illustrated in **Fig.2** and **Fig.3** is effective in causing each of the valves **39** to remain open for a long enough period of time to admit sufficient compressed gas to each of the cylinders **20** of the engine **21** to drive the engine **21**. The length of each of the contacts **65** around the periphery of the housing **53** is sufficient to permit the speed of the engine to be increased when desired by the operator by moving the throttle linkage **35** which actuates the linkage **33** to further open the regulating valve **31** to admit more compressed gas from the tank **23** to the distributor **33**. However, it has been found that the amount of air admitted by the valves **39** when using the first embodiment of the valve actuator **41** (**Fig.2** and **Fig.3**) is substantially more than required to operate the engine **21** at an idling speed. Therefore, it may be desirable to provide a valve actuator **41** which is capable of varying the duration of each engine cycle over which the solenoid valves **39** are actuated, i.e., remain open to admit compressed gas, as the speed of the engine **21** is varied.

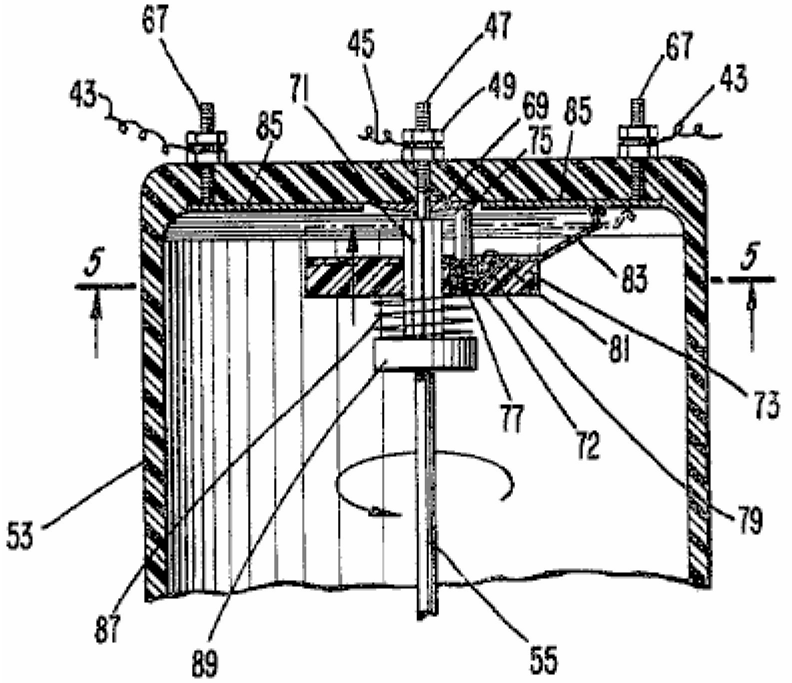

Fig.4

A second embodiment of a valve actuator **41** which is capable of varying the duration of each engine cycle over which each of the valves **39** remains open to admit compressed gas to the cylinders **20** dependent upon the speed of the engine **21** will be described with reference to **Fig.4** and **Fig.5** wherein members corresponding to those of **Fig.2** and **Fig.3** bear like reference numbers. The wire **45** from the electricity source is attached to the post **47** by the nut **49**. The post **47** has a annular contact ring **69** electrically connected to an end of the post **47** and arranged within the housing **53**. The shaft **55** rotates at one half the speed of the engine as in the embodiment of **Fig.2** and **Fig.3**.

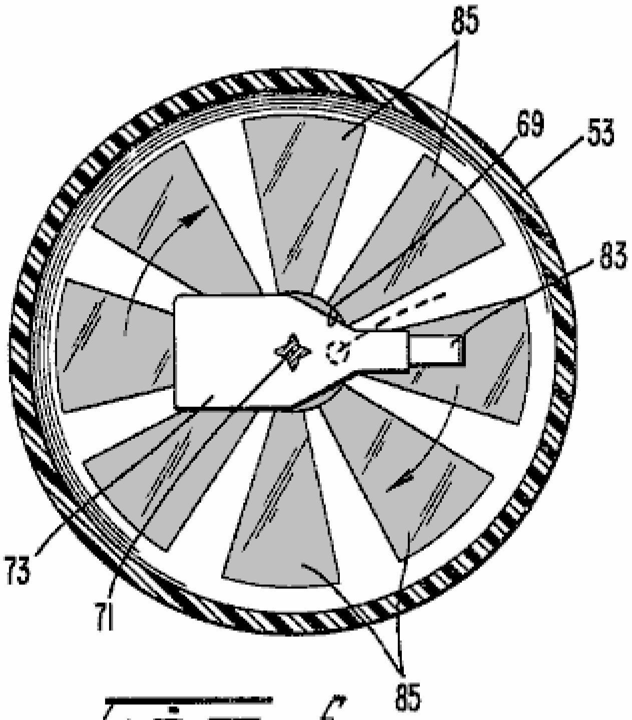

Fig.5

At an upper end of the shaft **55**, a splined section **71** receives a sliding insulating member **73**. The splined section **71** of the shaft **55** holds the insulating member **73** securely as it rotates with shaft **55** but permits the insulating member **73** to slide axially along the length of the splined section **71**. Near the shaft **55**, a conductive sleeve **72** is arranged in a bore **81** in an upper surface of the insulating element **73** generally parallel to the splined section **71**.

A contact **75**, biased towards the annular contact ring **69** by a spring **77**, is arranged within the conductive sleeve **72** and in contact with it. The conductive sleeve **72** also contacts a conductor **79** at a base of the bore **81**.

The conductor **79** extends to the upper surface of the insulating element **73** near an outer periphery of the insulating element **73** where the conductor **79** is electrically connected to a flexible contact **83**. The flexible contact **83** connects, one after the other, with a series of radial contacts **85** which are positioned on an upper inside surface of the housing **53**. A weak spring **87** arranged around the splined section **71** engages a stop member **89** secured on the shaft **55** and the insulating element **73** to slightly bias the insulating element **73** towards the upper inside surface of the housing **53** to ensure contact between the flexible contact **83** and the upper inside surface of the housing **53**. As best seen in **Fig.5**, the radial contacts **85** on the upper inside surface of the housing **53** are arranged generally in the form of radial spokes extending from the centre of the housing **53** with the number of contacts being equal to the number of cylinders **20** in the engine **21**. The number of degrees covered by each of the radial contacts **85** gradually increases as the distance from the centre of the upper inside surface of the housing **53** increases.

In operation of the device of **Fig.4** and **Fig.5**, as the shaft **55** rotates, electricity flows along a path through the wire **45** down through post **47** to the annular contact member **69** which is in constant contact with the spring biased contact **75.** The electrical current passes through the conductive sleeve **72** to the conductor **79** and then to the flexible contact **83**. As the flexible contact **83** rotates along with the insulating member **73** and the shaft **55**, the tip of the flexible contact **83** successively engages each of the radial contacts **85** on the upper inside of the housing **53.** As the speed of the shaft **55** increases, the insulating member **73** and the flexible contact **83** attached to it, move upwards along the splined section **71** of the shaft **55** due to the radial component of the splines in the direction of rotation under the influence of centrifugal force. As the insulating member **73** moves upwards, the flexible contact **83** is bent so that the tip of the contact **83** extends further outwards radially from the centre of the housing **53** (as seen in phantom lines in **Fig.4**). In other words, the effective length of the flexible contact **83** increases as the speed of the engine **21** increases.

As the flexible contact **83** is bent and the tip of the contact **83** moves outwards, the tip remains in contact with each of the radial contacts **85** for a longer period of each engine cycle due to the increased angular width of the radial contacts with increasing distance from the centre of the housing **53**. In this way, the length of time over which each of the valves **39** remains open is increased as the speed of the engine is increased. Thus, a larger quantity of compressed gas or air is injected into the cylinders as the speed increases. Conversely, as the speed decreases and the insulating member **73** moves downwards along the splined section **71**, a minimum quantity of air is injected into the cylinder due to the shorter length of the individual radial contact **85** which is in contact with the flexible contact **83.** In this way, the amount of compressed gas that is used during idling of the engine **21** is at a minimum whereas the amount of compressed gas which is required to increase the speed of the engine **21** to a level suitable to drive a vehicle on a highway is readily available.

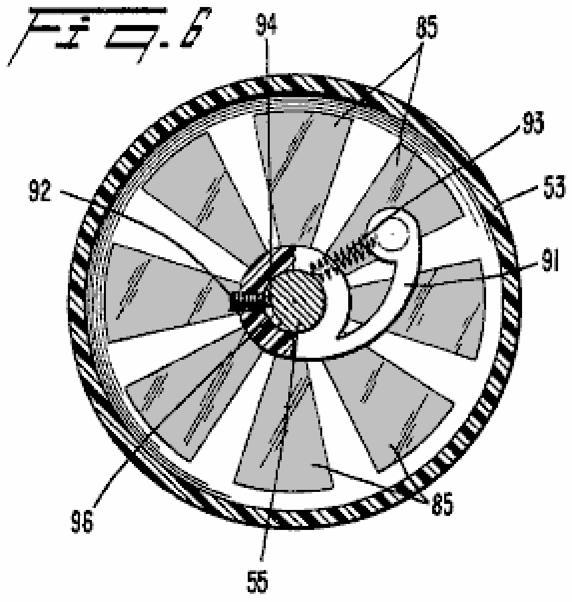
Fig.6

Shown in **Fig.6** and **Fig.7**, is a third embodiment of a valve actuator **41** according to the present invention. This embodiment includes a curved insulating element **91** having it’s first end able to pivot, being secured by any suitable device such as screw **92** to the shaft **55** for co-rotation with the shaft **55**. The screw **92** is screwed into a tapped hole in the insulating element **91** so that a tab **94** at an end of the screw **92** engages a groove **96** provided in the shaft **55**. In this way, the insulating element **91** rotates positively with the shaft **55**. However, as the shaft **55** rotates faster, the other end **98** of the insulating element **91** is permitted to pivot outwards under the influence of centrifugal force because of the groove **96** provided in the shaft **55**. A spring **93**, connected between the second end **98** of the element **91** and the shaft **55** urges the second end of the element **91** towards the centre of the housing **53**.

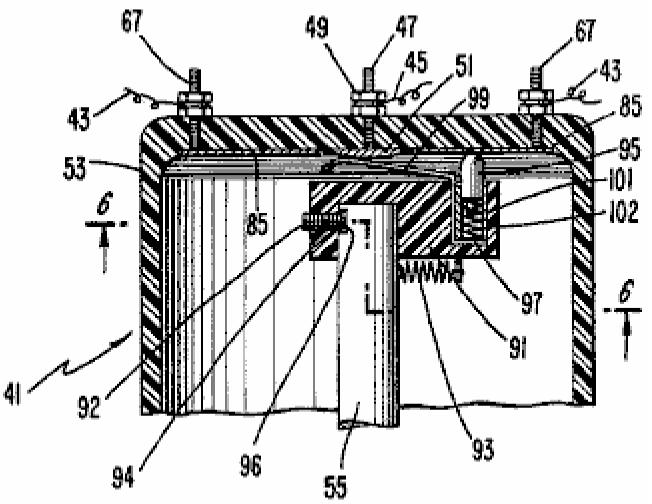

Fig-7

A contact **99** similar to the contact **59** (Fig.2) is arranged so that one end of the contact piece **99** is in constant contact with the conducting plate **51** located centrally within the housing **53**. The other end of the contact **99** engages a conductive sleeve **101** arranged in bore **102**. A contact element **95** is arranged in the conductive sleeve **101** in constant contact with the sleeve **101**. The bore **102** is arranged generally parallel to the shaft **55** near the second end of the curved insulating element **91**. The contact **95** is biased by a spring **97** towards the upper inside surface of the housing **53** for selective contact with each of the plurality of radial contacts **85** which increase in arc length towards the outer peripheral surface of the housing **53** (**Fig.6**).

When the device shown in **Fig.6** and **Fig.7** is operating, as the shaft **55** rotates the curved insulating element **91** rotates with the shaft **55** and the second end **98** of the insulating element **91** tends to pivot about the shaft **55** due to centrifugal force. Thus, as the effective length of the contact **95** increases, i.e., as the curved insulating element **91** pivots further outwards, the number of degrees of rotation over which the contact **95** is in contact with each of the radial contacts **85** on the upper inside surface of the housing **53** increases thereby allowing each of the valves **39** to remain open for a longer period of each engine cycle, which in turn, allows more compressed gas enter the respective cylinder **20** to further increase the speed of the engine **21**.

With reference to **Fig.1**, a mechanical advance linkage **104** which is connected to the throttle linkage **35**, advances the initiation of the opening of each valve **39** such that compressed gas is injected into the respective cylinder further before the piston **22** in the respective cylinder **20** reaches a Top Dead Centre position as the speed of the engine is increased by moving the throttle linkage **35**. The advance linkage **104** is similar to a conventional standard mechanical advance employed on an internal combustion engine. In other words, the linkage **104** varies the relationship between the angular positions of a point on the shaft **55** and a point on the housing **53** containing the contacts. Alternatively, a conventional vacuum advance could also be employed. By advancing the timing of the opening of the valves **39**, the speed of the engine can more easily be increased.

The operation of the engine cycle according to the present invention will now be described. The compressed gas injected into each cylinder of the engine **21** drives the respective piston **22** downwards to rotate a conventional crankshaft (not shown). The movement of the piston downwards causes the compressed gas to expand rapidly and cool. As the piston **22** begins to move upwards in the cylinder **20** a suitable exhaust valve (not shown), arranged to close an exhaust passageway, is opened by any suitable apparatus. The expanded gas is then expelled through the exhaust passageway. As the piston **22** begins to move downwards again, a suitable intake valve opens to admit ambient air to the cylinder. The intake valve closes and the ambient air is compressed on the subsequent upward movement of the piston until the piston reaches approximately the Top Dead Centre position at which time the compressed gas is again injected into the cylinder **20** to drive the piston **22** downwards and the cycle begins again.

In the case of adapting a conventional internal combustion engine for operation on compressed gas, a plurality of plates **103** are arranged, preferably over an end of the exhaust passageways, in order to reduce the outlet size of the exhaust passageways of the conventional internal combustion engine. In the illustrated embodiment, a single plate having an opening in the centre is bolted to the outside exhaust passageway on each bank of the V-8 engine, while another single plate having two openings in it, is arranged with one opening over each of the interior exhaust passageways on each bank of the V-8 engine. A line **105** is suitably attached to each of the adaptor plates to carry the exhaust to an appropriate location. In a preferred embodiment, the exhaust lines **105** are made from 1.5" plastic tubing.

In a preferred embodiment, the exhaust lines **105** of one bank of the V-8 engine are collected in a line **107** and fed to an inlet of a compressor **109**. The pressure of the exhaust gas emanating from the engine **21** according to the present invention is approximately 25 p.s.i. In this way, the compressor **109** does not have to pull the exhaust into the compressor since the gas exhausted from the engine **21** is at a positive pressure. The positive pressure of the incoming fluid increases the efficiency and reduces wear on the compressor **109**. The exhaust gas is compressed in the compressor **109** and returned through a line **111** and a check valve **113** to the compressed gas storage tank **23**. The check valve **113** prevents the flow of compressed gas stored in the tank **23** back towards the compressor **109**.

A suitable pressure sensor **115** is arranged at an upper end of the tank **23** and sends a signal along a line **117** when the pressure exceeds a predetermined level and when the pressure drops below a predetermined level. The line **117** controls an electrically activated clutch **119** positioned at the front end of the compressor **109**. The clutch **119** is operated to engage and disengage the compressor **109** from a drive pulley **121**. Also, the signal carried by the line **117** activates a suitable valve **123** arranged on compressor housing **125** to exhaust the air entering the compressor housing **125** from the line **107** when the clutch **119** has disengaged the compressor **109** from the drive pulley **121**.

In a preferred embodiment, when the pressure is the tank **23** reaches approximately 600 p.s.i., the clutch **119** is disengaged and the compressor **109** is deactivated and the valve **123** is opened to exhaust the expanded gas delivered to the compressor **109** from the line **107** to the atmosphere. When the pressure within the tank **23** drops below approximately 500 p.s.i., the sensor **115** sends a signal to engage the clutch **119** and close the valve **123**, thereby operating the compressor **109** for supplying the tank **23** with compressed gas.

The pulley **121** which drives the compressor **109** through the clutch **119** is driven by a belt **127** which is driven by a pulley **129** which operates through a gear box **131**. With reference to **Fig.1** and **Fig.8**, a second pulley **133** on the gear box is driven by a belt **135** from a pulley **137** arranged on a drive shaft **139** of the engine **21**. The pulley **137** drives a splined shaft **140** which has a first gear **141** and a second larger gear **143** placed on it, which rotates with the splined shaft **140**. The splined shaft **140** permits axial movement of the gears **141** and **143** along the shaft **140**.

Fig.8

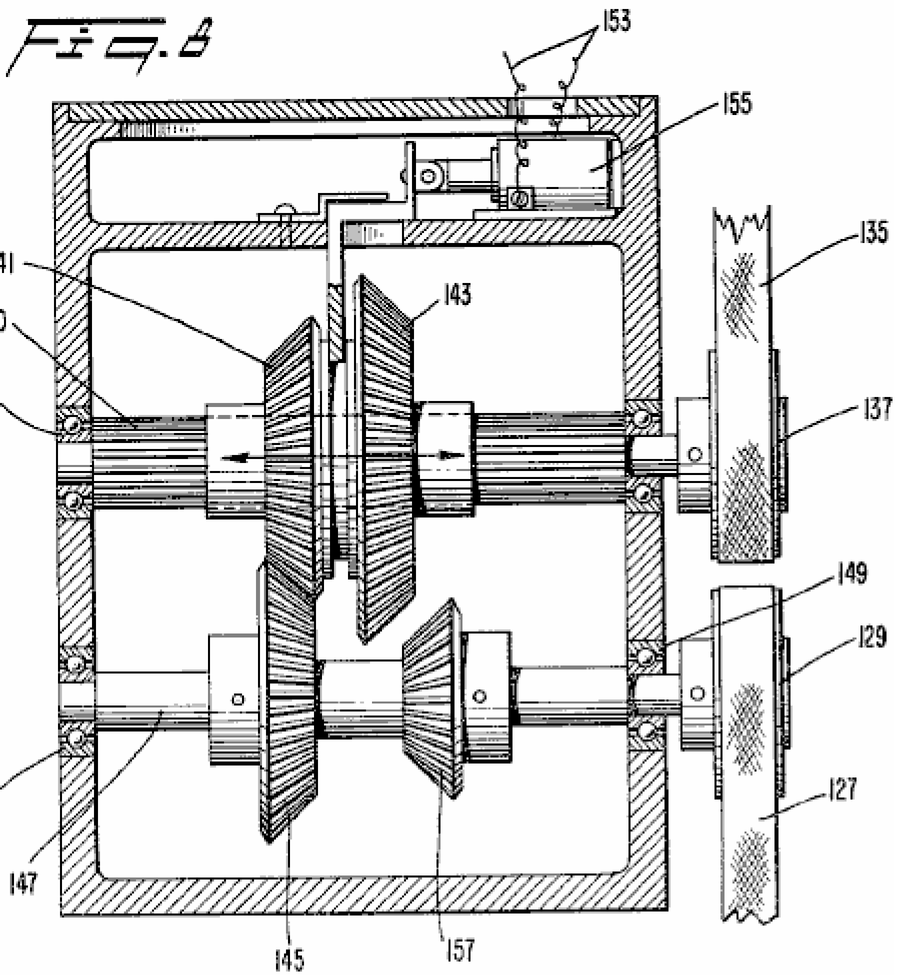

In normal operation (as seen in **Fig.8**), the first gear **141** engages a third gear **145** arranged on a shaft **147** which drives the pulley **129**. The shafts **140** and **147** are arranged in suitable bearings **149** positioned at each end of it. When the speed of the engine **21** drops below a predetermined level, a suitable sensor **151** responsive to the speed of the drive shaft **139** of the engine **21** generates a signal which is transmitted through a line **153** to a solenoid actuator **155** arranged within the gear box **131**. The solenoid actuator **155** moves the first and second gears **141**, **143** axially along the splined shaft **140** to the right as seen in **Fig.8** so that the second, larger gear **143** engages a fourth smaller gear **157** which is arranged on the shaft **147**. The ratio of the second gear **143** to the fourth gear **157** is preferably approximately 3 to 1.

In this way, when the speed of the engine **21** drops below the predetermined level as sensed by the sensor **151** (which predetermined level is insufficient to drive the compressor **109** at a speed sufficient to generate the 500-600 pounds of pressure which is preferably in the tank **23**), the solenoid actuator **155** is energised to slide the gears **143**, **141** axially along the splined shaft **140** so that the second, larger gear **143** engages the fourth, smaller gear **157** to drive the pulley **129** and hence the compressor **109** at a higher rate, to generate the desired pressure. When the speed of the engine increases above the predetermined level, which, in a preferred embodiment is approximately 1500 rpm, the solenoid actuator **155** is deactivated by the sensor **151** thereby moving the gears **143** and **141** to the left as seen in **Fig.8** so that the first gear **141**, engages again with the third gear **145** to effectuate a 1 to 1 ratio between the output shaft **139** of the engine **21** and the pulley **129**.

The other bank of the V-8 engine has its exhaust ports arranged with adapter plates **103** similar to those on the first bank. However, the exhaust from this bank of the engine **21** is not collected and circulated through the compressor **109**. In a preferred embodiment, a portion of the exhaust is collected in a line **159** and fed to an enlarged chamber **161**. A second fluid is fed through a line **163** into the chamber **161** to be cooled by the cool exhaust emanating from the engine **21** in the line **159**. The second fluid in the line **163** may be either transmission fluid contained in a transmission associated with the engine **21** or a portion of the oil used to lubricate the engine **21**. A second portion of the exhaust from the second bank of the V-8 engine is removed from the line **159** in a line **165** and used as a working fluid in an air conditioning system or for any other suitable use.

It should be noted that the particular arrangement utilised for collecting and distributing the gas exhausted from the engine **21** would be determined by the use for which the engine is employed. In other words, it may be advantageous to rearrange the exhaust tubing such that a larger or smaller percentage of the exhaust is routed through the compressor **109**. It should also be noted that since the exhaust lines **105** are plastic tubing, a rearrangement of the lines for a different purpose is both simple and inexpensive.

In operation of the engine of the present invention, the engine **21** is started by energising the solenoid valve **29** and any suitable starting device (not shown), e.g., a conventional electric starter as used on an internal combustion engine. Compressed gas from the full tank **23** flows through the line **25** and a variable amount of the compressed gas is admitted to the distributor **33** by controlling the regulator valve **31** through the linkage **33** and the operator actuated throttle linkage **35**. The compressed gas is distributed to each of the lines **37** which lead to the individual cylinders **20**. The compressed gas is admitted to each of the cylinders **20** in timed relationship to the position of the pistons within the cylinders by opening the valves **39** with the valve actuator **41**.

When it is desired to increase the speed of the engine, the operator moves the throttle linkage **35** which simultaneously admits a larger quantity of compressed gas to the distributor **33** from the tank **23** by further opening the regulator valve **31**. The timing of the valve actuator **41** is also advanced through the linkage **104**. Still further, as the speed of the engine **21** increases, the effective length of the rotating contact **83** (**Fig.4**) or **95** (**Fig.6**) increases thereby electrically contacting a wider portion of one of the stationary radial contacts **85** to cause each of the valves **39** to remain open for a longer period of each engine cycle to admit a larger quantity of compressed gas to each of the cylinders **20**.

As can be seen, the combination of the regulating valve **31**, the mechanical advance **104**, and the valve actuator **41**, combine to produce a compressed gas engine which is quickly and efficiently adaptable to various operating speeds. However, all three of the controls need not be employed simultaneously. For example, the mechanical advance **104** could be utilised without the benefit of one of the varying valve actuators **41** but the high speed operation of the engine may not be as efficient. By increasing the duration of each engine cycle over which each of the valves **39** remains open to admit compressed gas to each of the cylinders **20** as the speed increases, conservation of compressed gas during low speed operation and efficient high speed operation are both possible.

After the compressed gas admitted to the cylinder **20** has forced the piston **22** downwards within the cylinder to drive the shaft **139** of the engine, the piston **22** moves upwards within the cylinder **20** and forces the expanded gas out through a suitable exhaust valve (not shown) through the adapter plate **103** (if employed) and into the exhaust line **105**. The cool exhaust can then be collected in any suitable arrangement to be compressed and returned to the tank **23** or used for any desired purpose including use as a working fluid in an air conditioning system or as a coolant for oil.

When using the apparatus and method of the present invention to adapt a ordinary internal combustion engine for operation with compressed gas it can be seen that considerable savings in weight are achieved. For example, the ordinary cooling system including a radiator, fan, hoses, etc. can be eliminated since the compressed gas is cooled as it expands in the cylinder. In addition, there are no explosions within the cylinder to generate heat. Further reductions in weight are obtained by employing plastic tubing for the lines which carry the compressed gas between the distributor and the cylinders and for the exhaust lines. Once again, heavy tubing is not required since there is little or no heat generated by the engine of the present invention. In addition, the noise generated by an engine according to the present invention is considerably less than that generated by an ordinary internal combustion engine since there are no explosions taking place within the cylinders.

The principles of preferred embodiments of the present invention have been described in the foregoing specification. However, the invention which is intended to be protected is not to be construed as limited to the particular embodiments disclosed. The embodiments are to be regarded as illustrative rather than restrictive. Variations and changes may be made by others without departing from the spirit of the invention. Accordingly, it is expressly intended that all such variations and changes which fall within the spirit and the scope of the present invention as defined in the appended claims be embraced thereby.

Eber Van Valkinburg's Compressed Fluid Engine

Patent US 3,744,252 10th July 1973 Inventor: Eber Van Valkinburg

CLOSED MOTIVE POWER SYSTEM UTILISING COMPRESSED FLUIDS

ABSTRACT

Stored energy in a compressed elastic fluid is utilised in a controlled manner to pressurise an inelastic fluid and to maintain such pressurisation. The pressurised inelastic fluid is throttled to the impeller of a prime mover. Only a portion of the output energy from the prime mover is utilised to circulate the inelastic fluid so as to maintain a nearly constant volumetric balance in the system.

DESCRIPTION

The objective of the invention is to provide a closed-loop power system which utilises the expansive energy of a compressed elastic fluid, such as air, to pressurise and maintain pressurised throughout the operational cycle of the system a second non-elastic and non-compressible fluid, such as oil. The pressurised non-elastic fluid is released in a controlled manner by a throttle to the rotary impeller of a turbine or the like, having an output shaft. This shaft is coupled to a pump for the non-elastic fluid which automatically maintains the necessary circulation needed for the operation of the prime mover, and maintains a near volumetric balance in the system between the two fluids which are separated by self-adjusting free piston devices. The pump for the non-elastic fluid includes an automatic by-pass for the non-elastic fluid which eliminates the possibility of starving the pump which depends on the discharge of the non-elastic fluid at low pressure from the exhaust of the turbine. Other features and advantages of the invention will become apparent during the course of the following detailed description.

BRIEF DESCRIPTION OF DRAWING FIGURES

FIG I

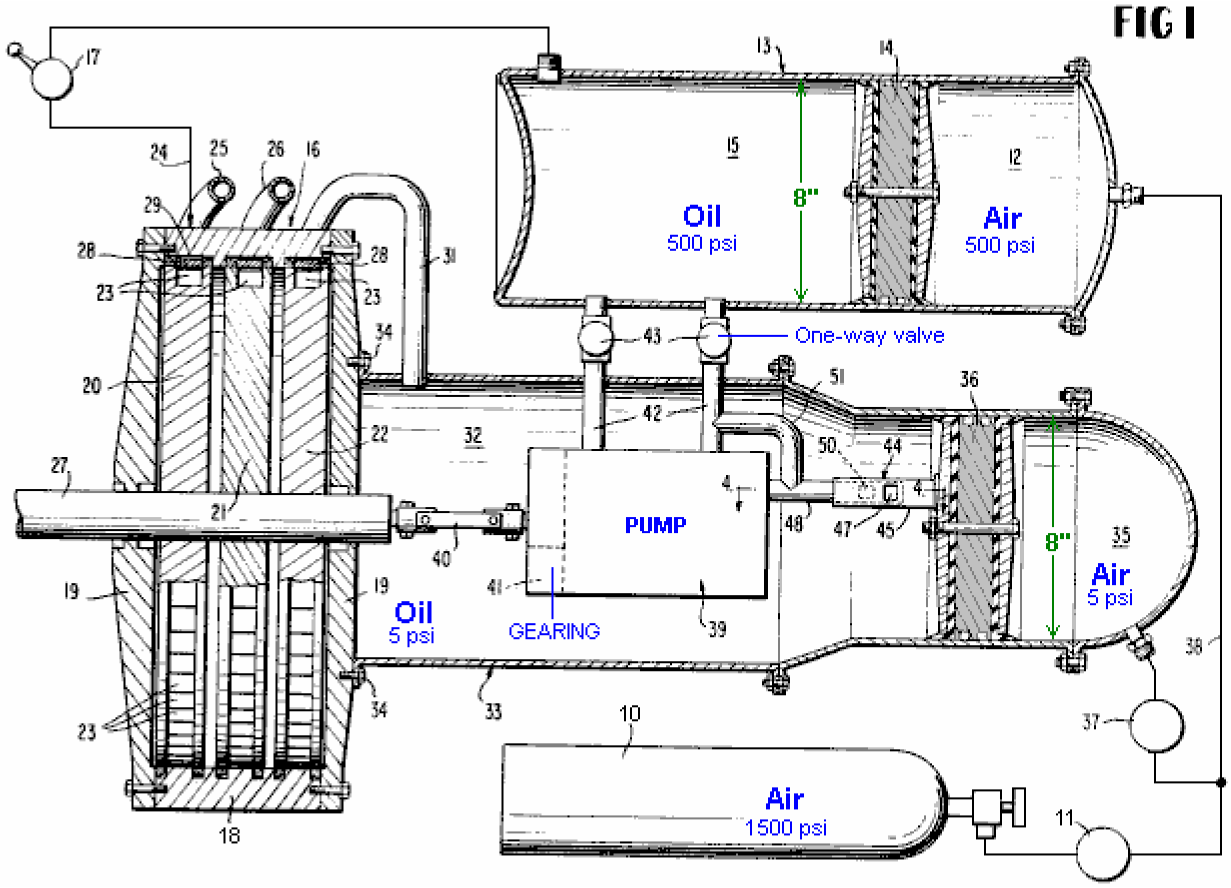

Fig.1 is a partly schematic cross-sectional view of a closed motive power system embodying the invention.

FIG 2

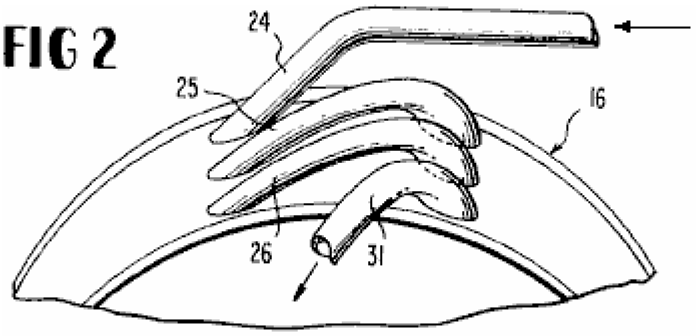

Fig.2 is a fragmentary perspective view of a rotary prime mover utilised in the system.

FIG 3

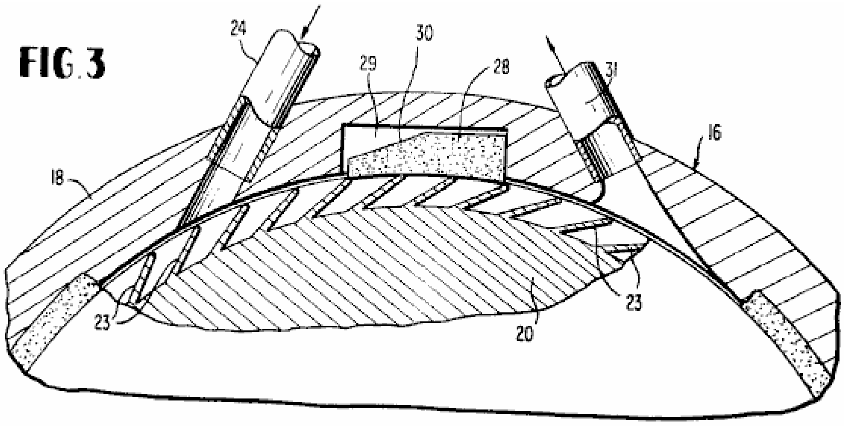

Fig.3 is an enlarged fragmentary vertical section through the prime mover taken at right angles to its rotational axis.

FIG 4

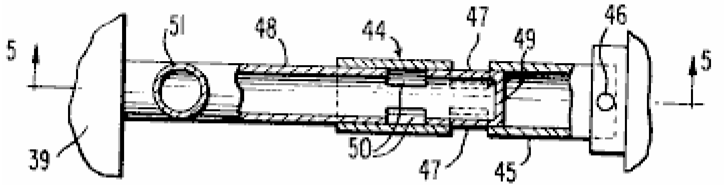

Fig.4 is an enlarged fragmentary vertical section taken on line **4--4** of **Fig.1**.

FIG.5

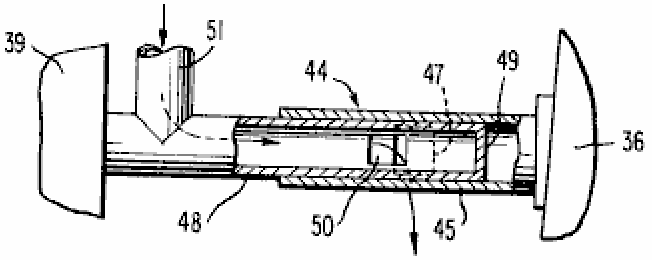

Fig.5 is a similar section taken on line **5--5** of **Fig.4**.

DETAILED DESCRIPTION

FIG I

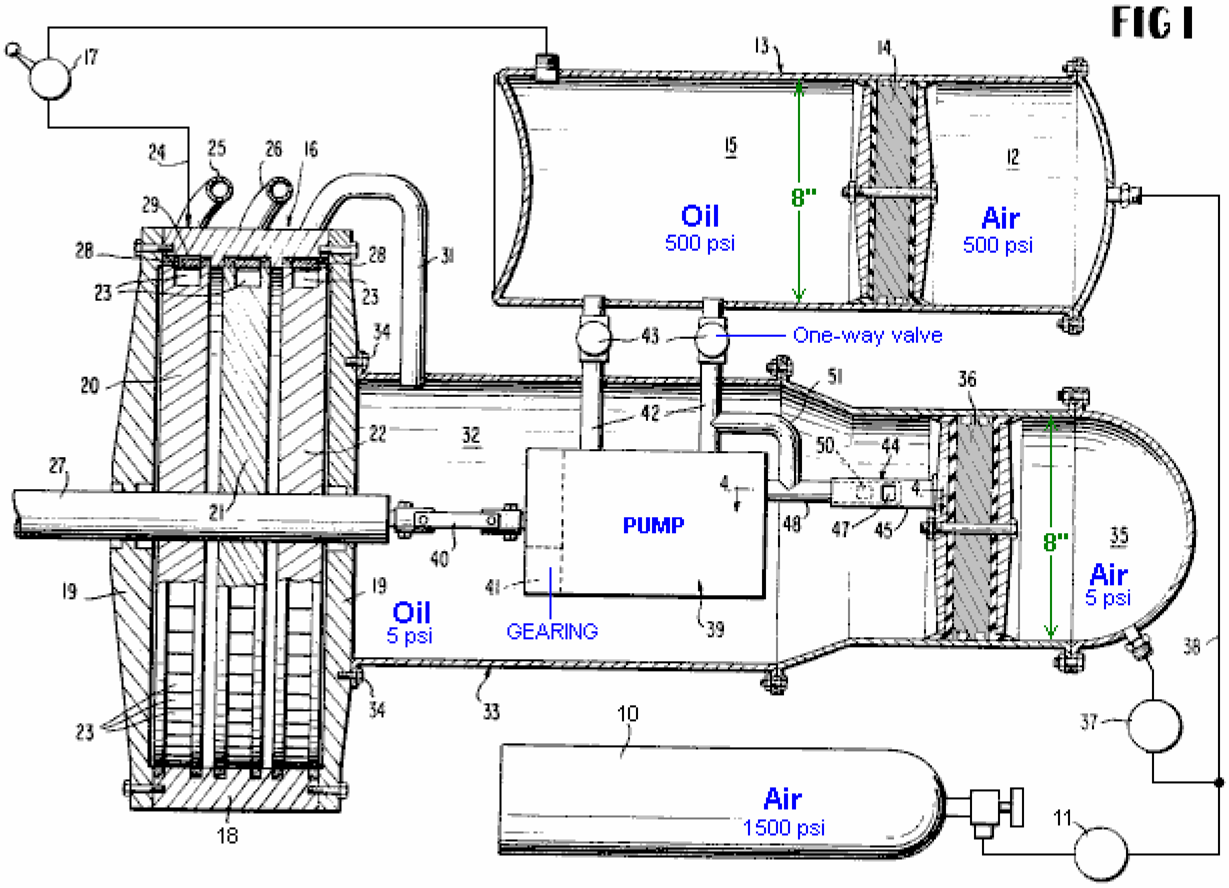

Referring to the drawings in detail, in which the same numbers refer to the same parts in each drawing, the numeral **10** designates a supply bottle or tank for a compressed elastic fluid, such as air. Preferably, the air in the bottle **10** is compressed to approximately 1,500 p.s.i. The compressed air from the bottle **10** is delivered through a suitable pressure regulating valve **11** to the chamber **12** of a high pressure tank **13** on one side of a free piston **14** in the bore of such tank. The free piston **14** separates the chamber **12** for compressed air from a second chamber **15** for an inelastic fluid, such as oil, on the opposite side of the free piston. The free piston **14** can move axially within the bore of the cylindrical tank **13** and is constantly self-adjusting there to maintain a proper volumetric balance between the two separated fluids of the system. The free piston has the ability to maintain the two fluids, air and oil, completely separated during the operation of the system.

The regulator valve **11** delivers compressed air to the chamber **12** under a pressure of approximately 500 p.s.i. The working inelastic fluid, oil, which fills the chamber **15** of high pressure tank **13** is maintained under 500 p.s.i. pressure by the expansive force of the elastic compressed air in the chamber **12** on the free piston **14**. The oil in the chamber **15** is delivered to a prime mover **16**, such as an oil turbine, through a suitable supply regulating or throttle valve **17** which controls the volume of pressurised oil delivered to the prime mover.

The turbine **16** embodies a stator consisting of a casing ring **18** and end cover plates **19** joined to it in a fluid- tight manner. It further embodies a single or plural stage impeller or rotor having bladed wheels **20**, **21** and **22** in the illustrated embodiment. The peripheral blades **23** of these turbine wheels receive the motive fluid from the pressurised chamber **15** through serially connected nozzles **24**, **25** and **26**, connected generally tangentially through the stator ring **18**, as shown in **Fig.3**. The first nozzle **24** shown schematically in **Fig.1** is connected directly with the outlet of the throttle valve **17**. The successive nozzles **25** and **26** deliver the pressurised working fluid serially to the blades **23** of the turbine wheels **21** and **22**, all of the turbine wheels being suitably coupled to a central axial output or working shaft **27** of the turbine **16**.

FIG.3

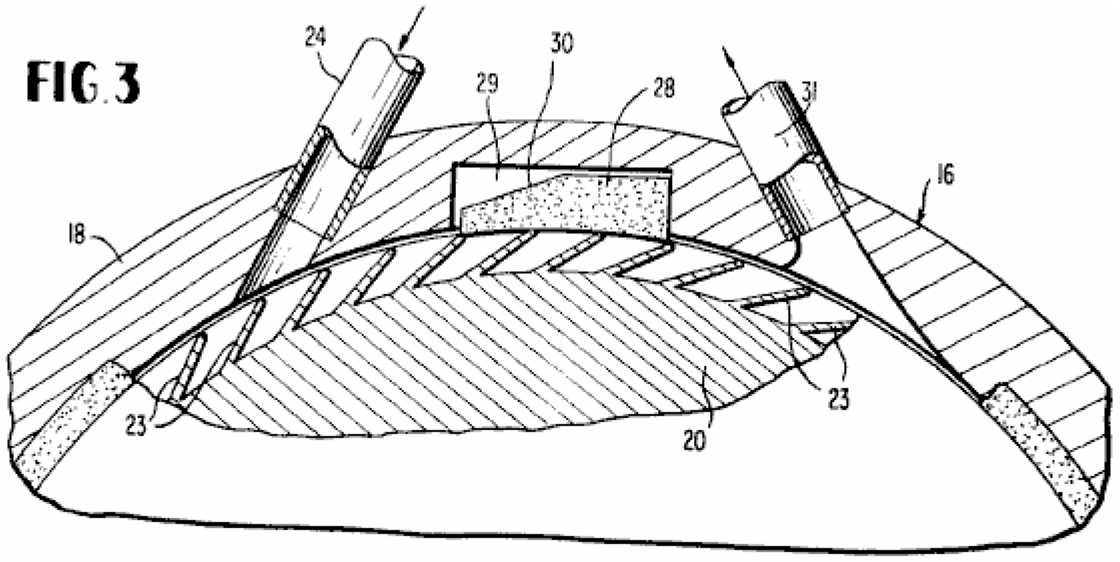

Back-pressure sealing blocks **28**, made of fibre, are contained within recesses **29** of casing ring **18** to prevent co-mingling of the working fluid and exhaust at each stage of the turbine. A back-pressure sealing block **28** is actually only required in the third stage between inlet **26** and exhaust **31**, because of the pressure distribution, but such a block can be included in each stage as shown in **Fig.1**. The top surface, including a sloping face portion **30** on each block **28**, reacts with the pressurised fluid to keep the fibre block sealed against the adjacent, bladed turbine wheel; and the longer the slope on the block to increase it's top surface area, the greater will be the sealing pressure pushing it against the periphery of the wheel.

Leading from the final stage of the turbine **16** is a low-pressure working fluid exhaust nozzle **31** which delivers the working fluid, oil, into an oil supply chamber or reservoir **32** of a low pressure tank **33** which may be bolted to the adjacent end cover plate **19** of the turbine, as indicated at **34**. The oil entering the reservoir chamber **32** from the exhaust stage of the turbine is at a pressure of about 3-5 p.s.i. In a second chamber **35** of the low pressure tank **33** separated from the chamber **32** by an automatically moving or self-adjusting free piston **36**, compressed air at a balancing pressure of from 3-5 p.s.i. is maintained by a second pressure regulating valve **37**. The pressure regulating valve **37** is connected with the compressed air supply line **38** which extends from the regulating valve **11** to the high pressure chamber **12** for compressed air.

Within the chamber **32** is a gear pump **39** or the like having its input shaft connected by a coupling **40** with the turbine shaft **27**. Suitable reduction gearing **41** for the pump may be provided internally, as shown, or in any other conventional manner, to gear down the rotational speed derived from the turbine shaft. The pump **39** is supplied with the oil in the filled chamber **32** delivered by the exhaust nozzle or conduit **31** from the turbine. The pump, as illustrated, has twin outlet or delivery conduits **42** each having a back-pressure check valve **43** connected therein and each delivering a like volume of pressurised oil back to the high pressure chamber **15** at a pressure of about 500 p.s.i. The pump **39** also has twin fluid inlets. The pump employed is preferably of the type known on the market as "Hydreco Tandem Gear Pump," Model No. 151515, L12BL, or equivalent. In some models, other types of pumps could be employed including pumps having a single inlet and outlet. The illustrated pump will operate clockwise or counter-clockwise and will deliver 14.1 g.p.m. at 1,800 r.p.m. and 1,500 p.s.i. Therefore, in the present application of the pump **39**, it will be operating at considerably less than capacity and will be under no undue stress.

FIG. 4

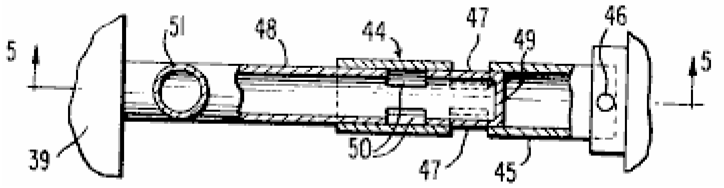

FIG. 5

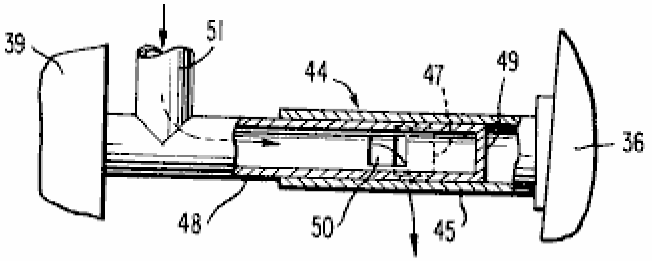

Since the pump depends for its supply of fluid on the delivery of oil at low pressure from the turbine **16** into the chamber **32**, an automatically operating by-pass sleeve valve device **44** for oil is provided as indicated in **Fig.1**, **Fig.4** and **Fig.5**. This device comprises an exterior sleeve or tube **45** having one end directly rigidly secured as at **46** to the movable free piston **36**. This sleeve **45** is provided with slots **47** intermediate its ends. A co-acting interior sleeve **48** engages telescopically and slidably within the sleeve **45** and has a closed end wall **49** and ports or slots **50** intermediate its ends, as shown. The sleeve **48** communicates with one of the delivery conduits **42** by way of an elbow **51**, and the sleeve **48** is also connected with the adjacent end of the pump **39**, as shown.

As long as the chamber **32** is filled with low pressure oil sufficient to balance the low air pressure in the chamber **35** on the opposite side of free piston **36**, such piston will be positioned as shown in **Fig.1** and **Fig.4** so that the slots **47** and **50** of the two sleeves **45** and **48** are out of registration and therefore no flow path exists through them. Under such circumstances, the oil from the chamber **32** will enter the pump and will be delivered by the two conduits **42** at the required pressure to the chamber **15**. Should the supply of oil from the turbine **16** to the chamber **32** diminish so that pump **39** might not be adequately supplied, then the resulting drop in pressure in the chamber **32** will cause the free piston **36** to move to the left in **Fig.1** and bring the slots **47** into registration or partial registration with the slots **50**, as depicted in **Fig.5**. This will instantly establish a by-pass for oil from one conduit **42** back through the elbow **51** and tubes **48** and **45** and their registering slots to the oil chamber **32** to maintain this chamber filled and properly pressurised at all times. The by-pass arrangement is completely automatic and responds to a diminished supply of oil from the turbine into the chamber **32**, so long as the required compressed air pressure of 3-5 p.s.i. is maintained in the chamber **35**.

Briefly, in summary, the system operates as follows. The pressurised inelastic and non-compressible fluid, oil, from the chamber **15** is throttled into the turbine **16** by utilising the throttle valve **17** in a control station. The resulting rotation of the shaft **27** produces the required mechanical energy or work to power a given instrumentality, such as a propeller. A relatively small component of this work energy is utilised through the coupling **40** to drive the pump **39** which maintains the necessary volumetric flow of oil from the turbine back into the high pressure chamber **15**, with the automatic by-pass **44** coming into operation whenever needed.

The ultimate source of energy for the closed power system is the compressed elastic fluid, air, in the tank or bottle **10** which through the regulating valves **11** and **37** maintains a constant air pressure in the required degree in each of the chambers **12** and **35**. As described, the air pressure in the high pressure chamber **12** will be approximately 500 p.s.i. and in the low pressure chamber **35** will be approximately 3-5 p.s.i.

It may be observed in **Fig.1** that the tank **33** is enlarged relative to the tank **13** to compensate for the space occupied by the pump and associated components. The usable volumes of the two tanks are approximately equal.

In an operative embodiment of the invention, the two free pistons **14** and **36** and the tank bores receiving them are 8 inches in diameter. The approximate diameters of the bladed turbine wheels are 18 inches. The pump **39** is approximately 10 inches long and 5 inches in diameter. The tank **13** is about 21 inches long between its crowned end walls. The tank **33** is 10 inches in diameter adjacent to the pump **39**.

The terms and expressions which have been employed herein are used as terms of description and not of limitation, and there is no intention, in the use of such terms and expressions, of excluding any equivalents of the features shown and described or portions thereof but it is recognised that various modifications are possible within the scope of the invention claimed.

Josef Papp's Inert Gas Engine

US Patent 4,428,193 **31st January 1984** **Inventor: Josef Papp**

INERT GAS FUEL, FUEL PREPARATION APPARATUS AND SYSTEM FOR EXTRACTING USEFUL WORK FROM THE FUEL

ABSTRACT

An inert gas fuel consisting essentially of a precise, homogeneous mixture of helium, neon, argon, krypton and xenon. Apparatus for preparing the fuel includes a mixing chamber, tubing to allow movement of each inert gas into and through the various stages of the apparatus, a plurality of electric coils for producing magnetic fields, an ion gauge, ionises, cathode ray tubes, filters, a polarise and a high frequency generator. An engine for extracting useful work from the fuel has at least two closed cylinders for fuel, each cylinder being defined by a head and a piston. A plurality of electrodes extend into each chamber, some containing low level radioactive material. The head has a generally concave depression facing a generally semi-toroidal depression in the surface of the piston. The piston is axially movable with respect to the head from a first position to a second position and back, which linear motion is converted to rotary motion by a crankshaft. The engine's electrical system includes coils and condensers which circle each cylinder, an electric generator, and circuitry for controlling the flow of current within the system.

BACKGROUND OF THE INVENTION

This invention relates to closed reciprocating engines, i.e., ones which do not require an air supply and do not emit exhaust gases, and more particularly to such engines which use inert gases as fuel. It also concerns such inert gas fuels and apparatus for preparing same.

Currently available internal combustion engines suffer from several disadvantages. They are inefficient in their utilisation of the energy present in their fuels. The fuel itself is generally a petroleum derivative with an ever-increasing price and sometimes limited availability. The burning of such fuel normally results in pollutants which are emitted into the atmosphere. These engines require oxygen and, therefore, are particularly unsuitable in environments, such as underwater or outer space, in which gaseous oxygen is relatively unavailable. Present internal combustion engines are, furthermore, relatively complex with a great number of moving parts. Larger units, such as fossil-fuel electric power plants, escape some of the disadvantages of the present internal combustion engine, but not, inter alia, those of pollution, price of fuel and availability of fuel.

Several alternative energy sources have been proposed, such as the sun (through direct solar power devices), nuclear fission and nuclear fusion. Due to the lack of public acceptance, cost, other pollutants, technical problems, and/or lack of development, these sources have not wholly solved the problem.
Moreover, the preparation of fuel for nuclear fission and nuclear fusion reactors has heretofore been a complicated process requiring expensive apparatus.

SUMMARY OF THE INVENTION

Among the several objects of the present invention may be noted the provision of an engine which is efficient; the provision of an engine which does not require frequent refuelling; the provision of an engine which develops no pollutants in operation; the provision of an engine which is particularly suited for use in environments devoid of free oxygen; the provision of an engine which requires no oxygen in operation; the provision of an engine having a relatively small number of moving parts; the provision of an engine of a relatively simple construction; the provision of an engine which can be used in light and heavy-duty applications; the provision of an engine which is relatively inexpensive to make and operate; the provision of a fuel which uses widely available components; the provision of a fuel which is relatively inexpensive; the provision of a fuel which is not a petroleum derivative; the provision of relatively simple and inexpensive apparatus for preparing inert gases for use as a fuel; the provision of such apparatus which mixes inert gases in precise, predetermined ratios; and the provision of such apparatus which eliminates contaminants from the inert gas mixture. Other objects and features will be in part apparent and in part pointed out hereinafter.

Briefly, in one aspect the engine of the present invention includes a head having a generally concave depression in it, the head defining one end of a chamber, a piston having a generally semi-toroidal depression in its upper surface, the piston defining the other end of the chamber, and a plurality of electrodes extending into the chamber for exciting and igniting the working fluid. The piston can move along its axis towards and away from the head, causing the volume of the chamber to alter, depending on the position of the piston relative to the head.

In another aspect, the engine of the present invention includes a head which defines one end of the chamber, a piston which defines the other end of the chamber, a plurality of magnetic coils wound around the chamber for generating magnetic fields inside the chamber, and at least four electrodes extending into the chamber for exciting and igniting the working fluid. The magnetic coils are generally coaxial with the chamber. The electrodes are generally equidistantly spaced from the axis of the chamber and are each normally positioned 90 degrees from the adjacent electrodes. Lines between opposed pairs of electrodes intersect generally on the axis of the chamber to define a focal point.

In a further aspect, the engine of the present invention includes a head which defines one end of a chamber, a piston which defines the other end of the chamber, at least two electric coils wound around the chamber for generating magnetic fields inside the chamber, and a plurality of electrodes extending into the chamber for exciting and igniting the working fluid. The electric coils are generally coaxial with the chamber. And the working fluid includes a mixture of inert gases.

The apparatus of the present invention for preparing a mixture of inert gases for use as a fuel includes a chamber, electric coils for generating predetermined magnetic fields inside the chamber, tubing adapted to be connected to sources of preselected inert gases for flow of the gases from the sources to the chamber, and ionisers for ionising the gases.

The fuel of the present invention includes a mixture of inert gases including approximately 36% helium, approximately 26% neon, approximately 17% argon, approximately 13% krypton, and approximately 8% xenon by volume.

BRIEF DESCRIPTION OF THE DRAWINGS

Fig.1 is a side elevation of an engine of this invention:
Fig.2 is a rear elevation of an engine of this invention:

FIG. 1

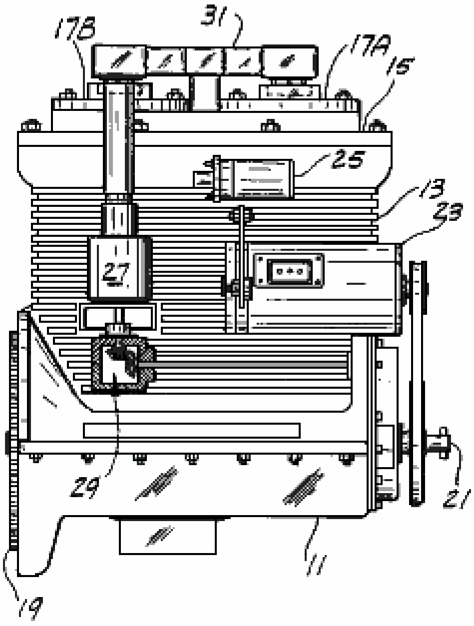

FIG. 2

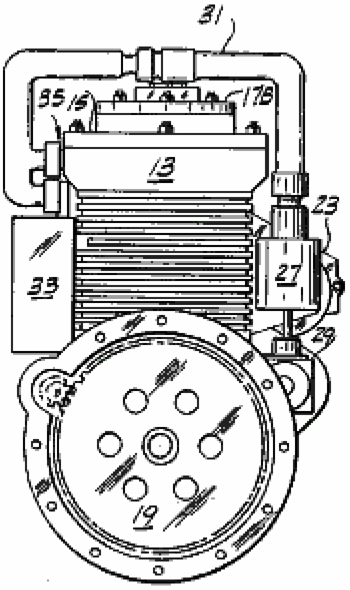

Fig.3 is a top view of an engine of this invention:

FIG.3

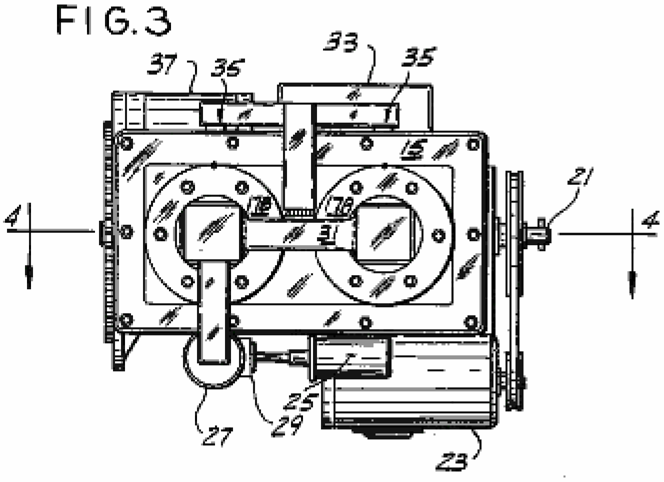

Fig.4 is a cross-sectional view generally along line **4--4** of **Fig.3** of an engine of this invention:

FIG.4

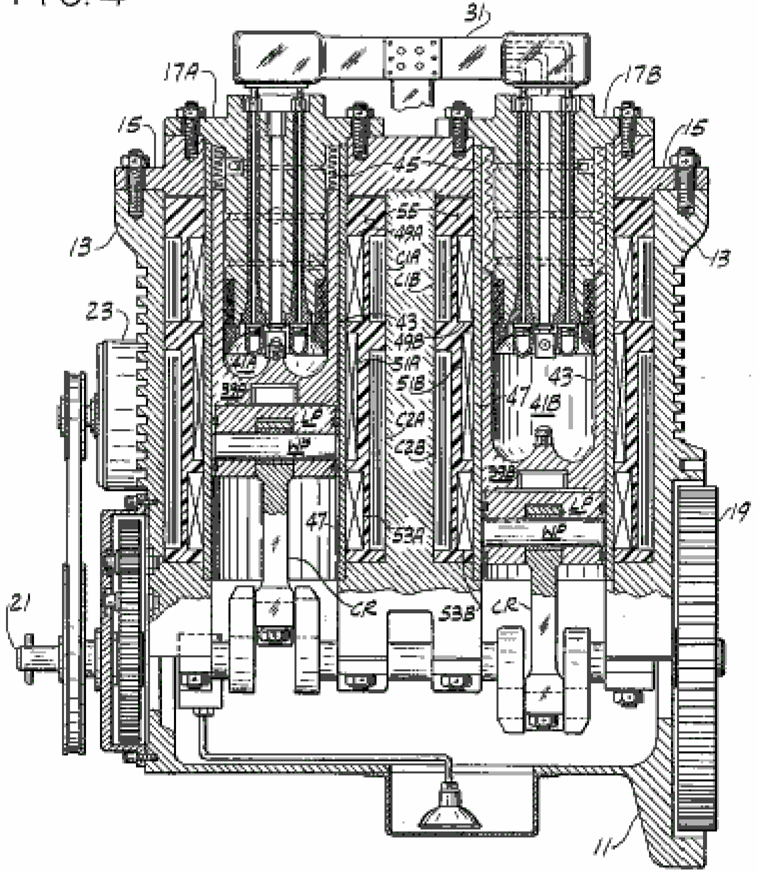

Fig.5 is a cross-sectional view of a cylinder of an engine of this invention:

FIG.5

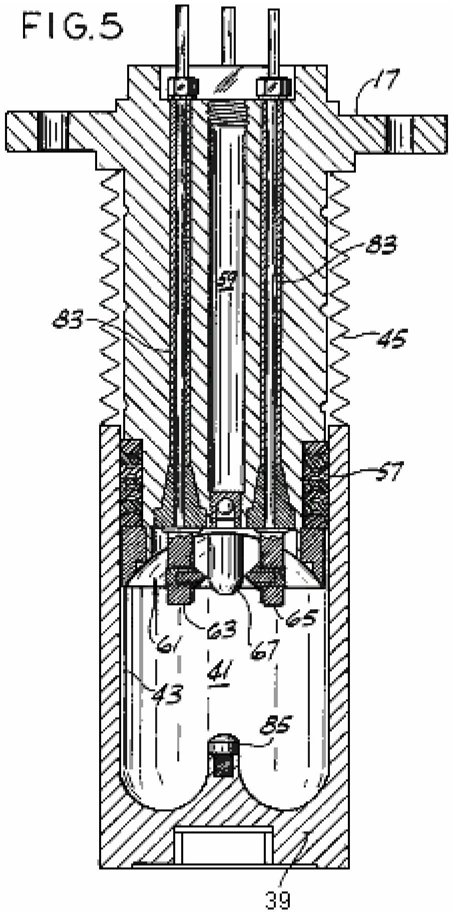

Fig.6 is a plan of the base of a cylinder head of an engine of this invention:

FIG.6

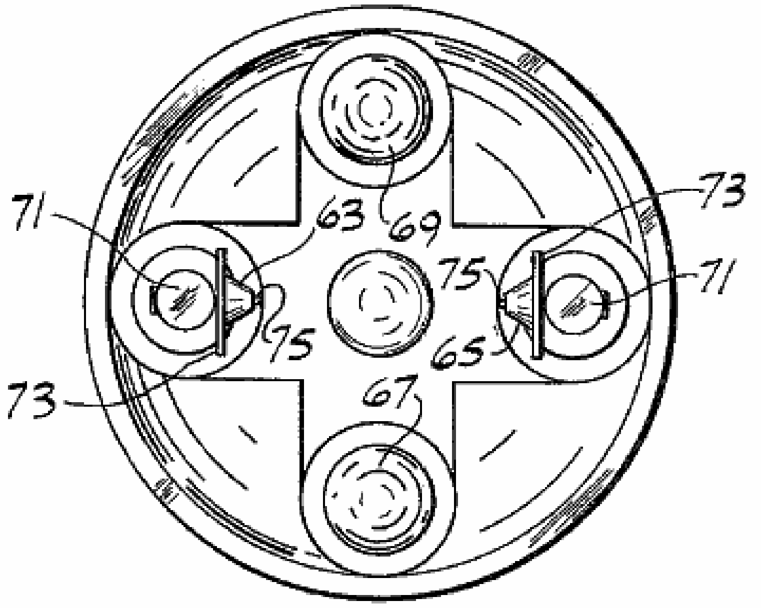

Fig.7 is an elevation of an electrode rod of an engine of this invention:

FIG.7

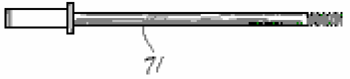

Fig.8 is an elevation, with parts broken away, of one type of electrode used in an engine of this invention:

FIG.8

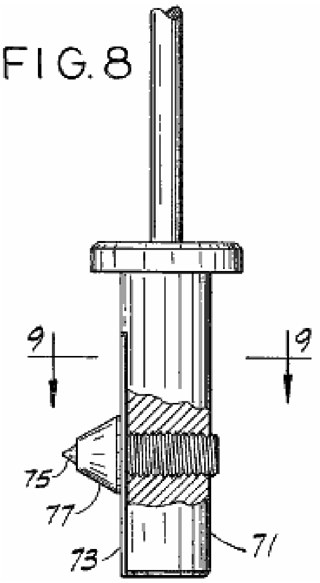

Fig.9 is a view taken generally along line **9--9** of **Fig.8**:

FIG.9

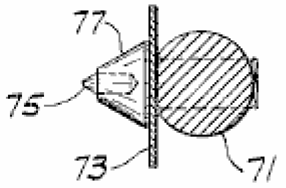

Fig.10 is a cross-sectional view of a second type of electrode used in an engine of this invention:

FIG.10

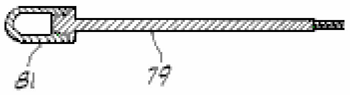

Fig.11 is a cross-sectional view similar to **Fig.5** showing the piston in its uppermost position:

FIG.11

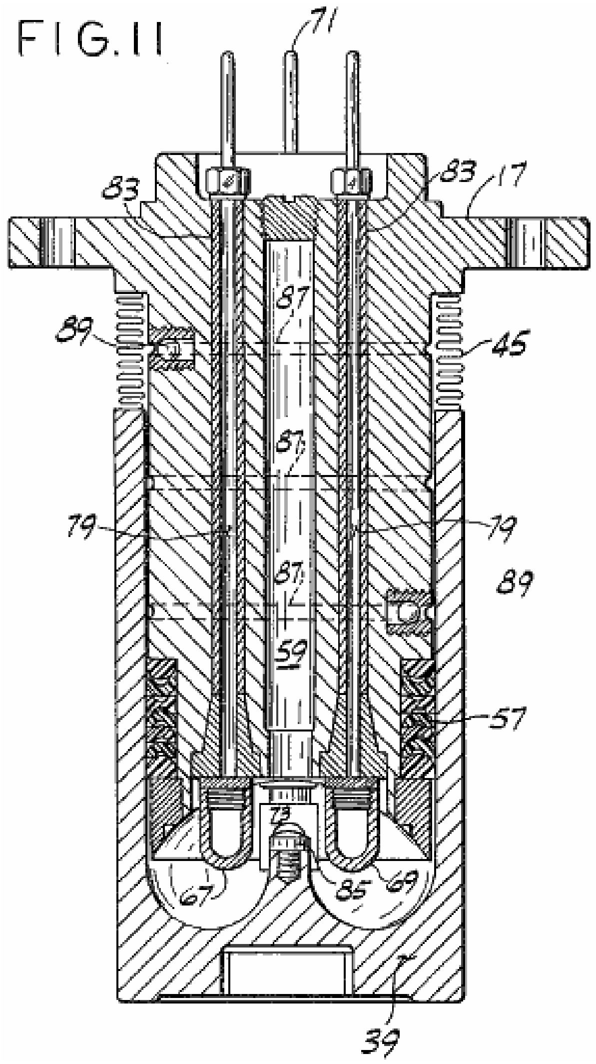

Fig.12 is a cross-sectional view similar to **Fig.5** showing an alternative cylinder used in an engine of this invention:

FIG.12

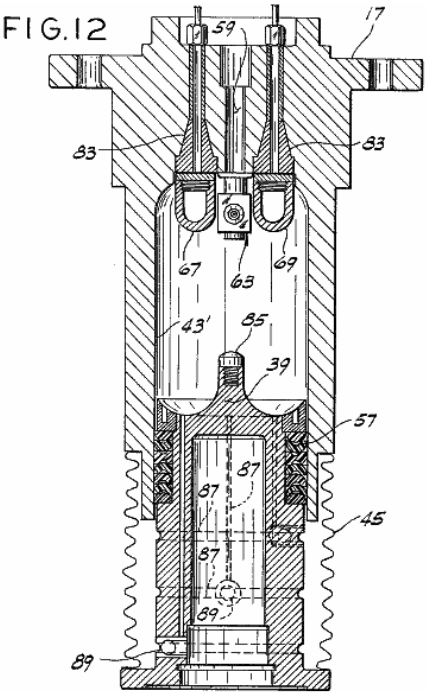

Fig.12A is a cross-sectional view similar to **Fig.5** and **Fig.12**, but on a reduced scale and with parts broken away, showing an additional embodiment of a cylinder head used in an engine of this invention:

FIG.12A

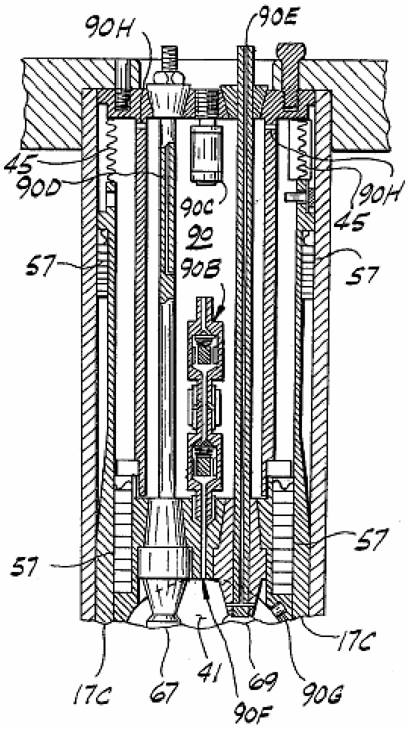

Fig.13A and **Fig.13B** are schematic diagrams of the electrical circuitry for an engine of this invention:

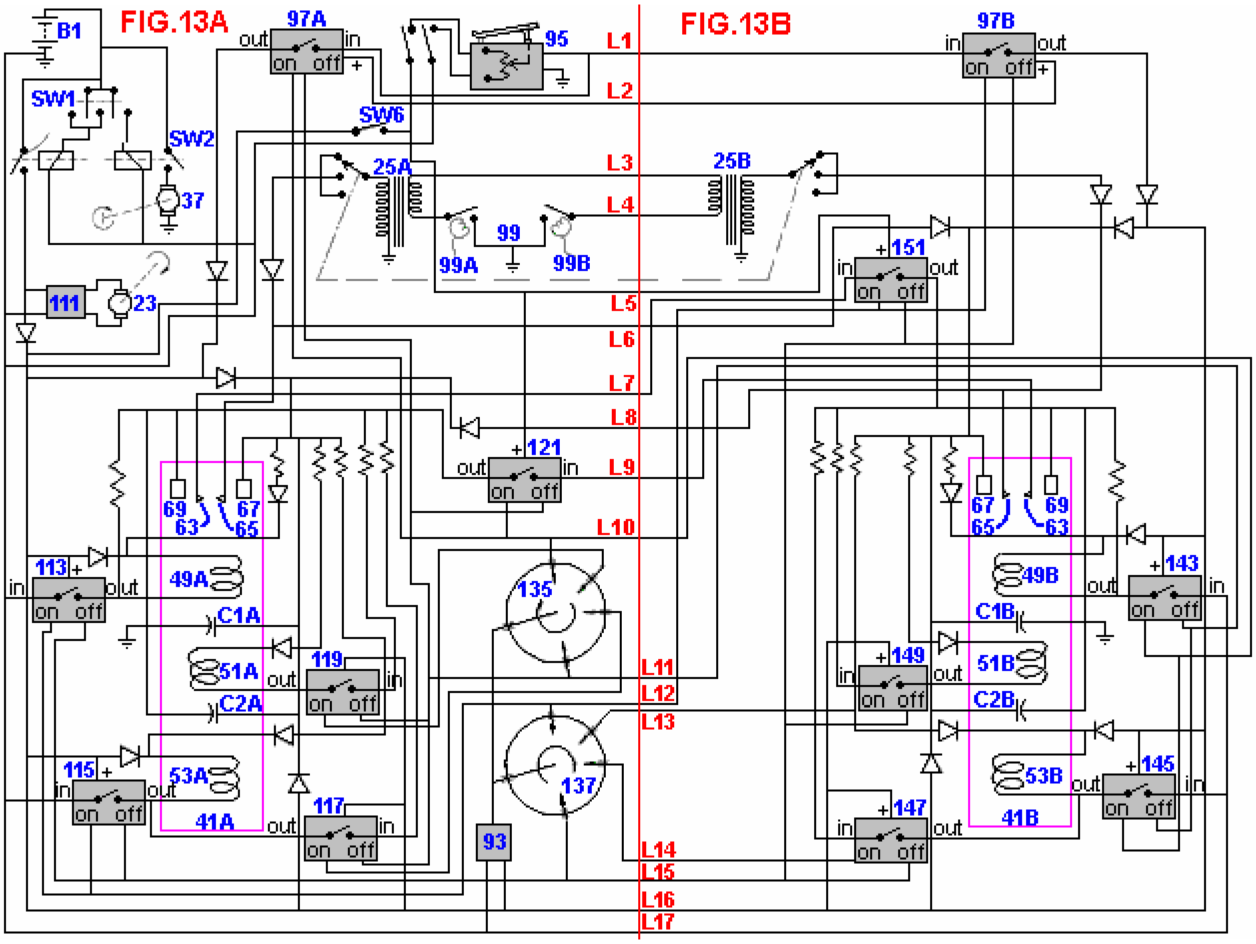

Fig.14 is a schematic diagram of an alternative high-voltage ignition system for an engine of this invention:

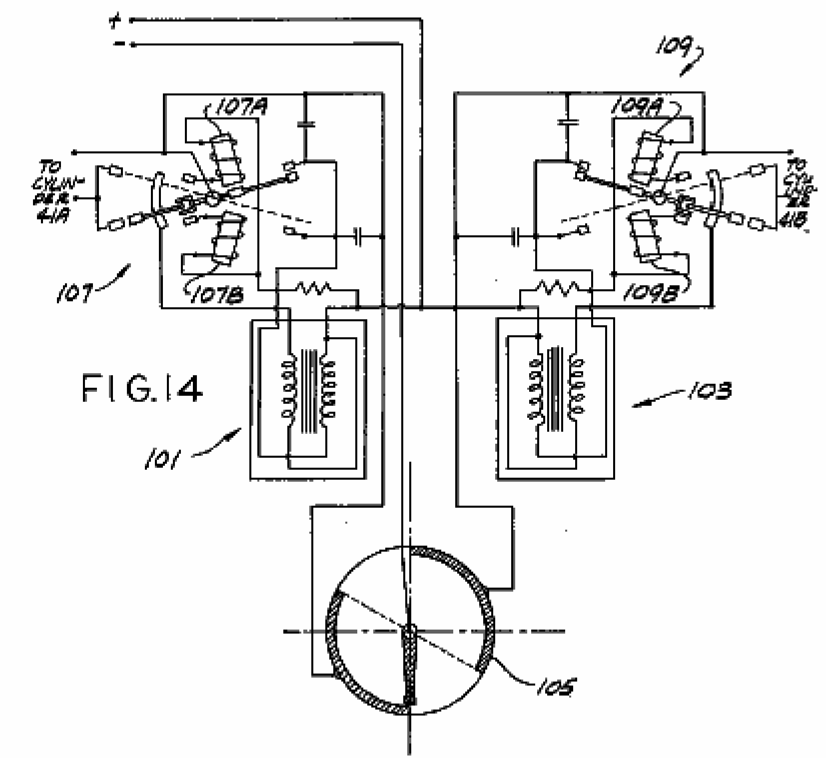
FIG.14

Fig.15 is a schematic diagram of an electronic switching unit for an engine of this invention:
Fig.16 is a schematic diagram of a regulator/electronic switching unit for an engine of this invention:

FIG.15

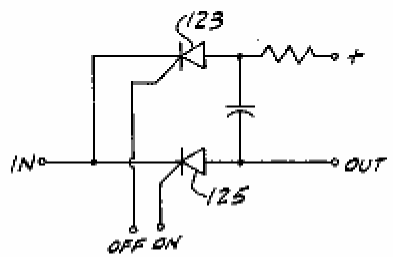

FIG.16

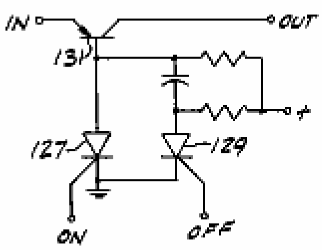

Figs.17A-17D are schematic diagrams of a fuel mixer of the present invention:

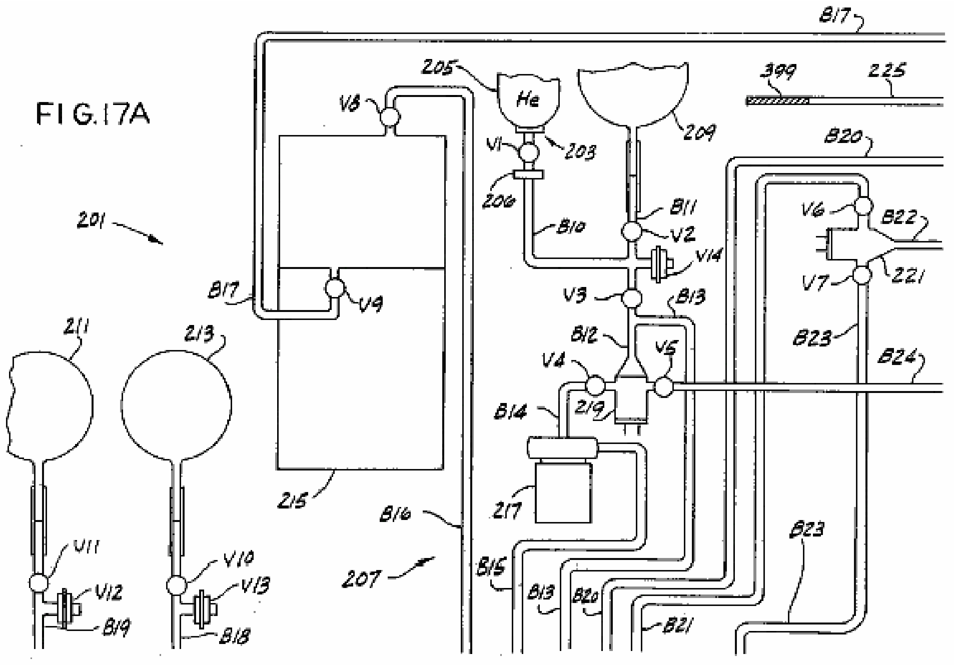
FIG.17A

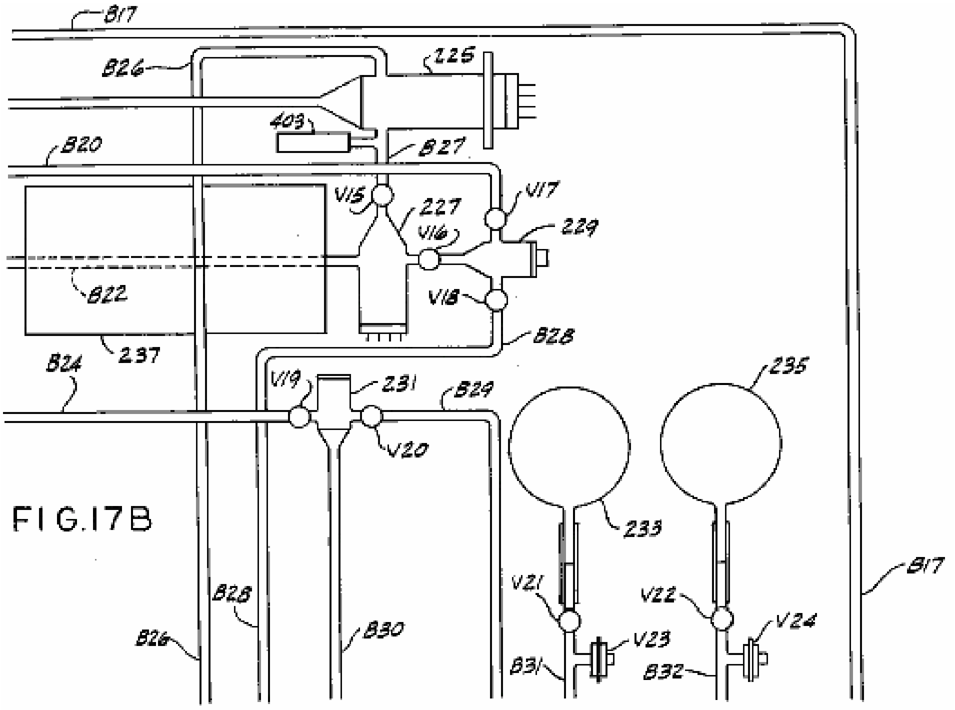
FIG.17B

FIG.17C

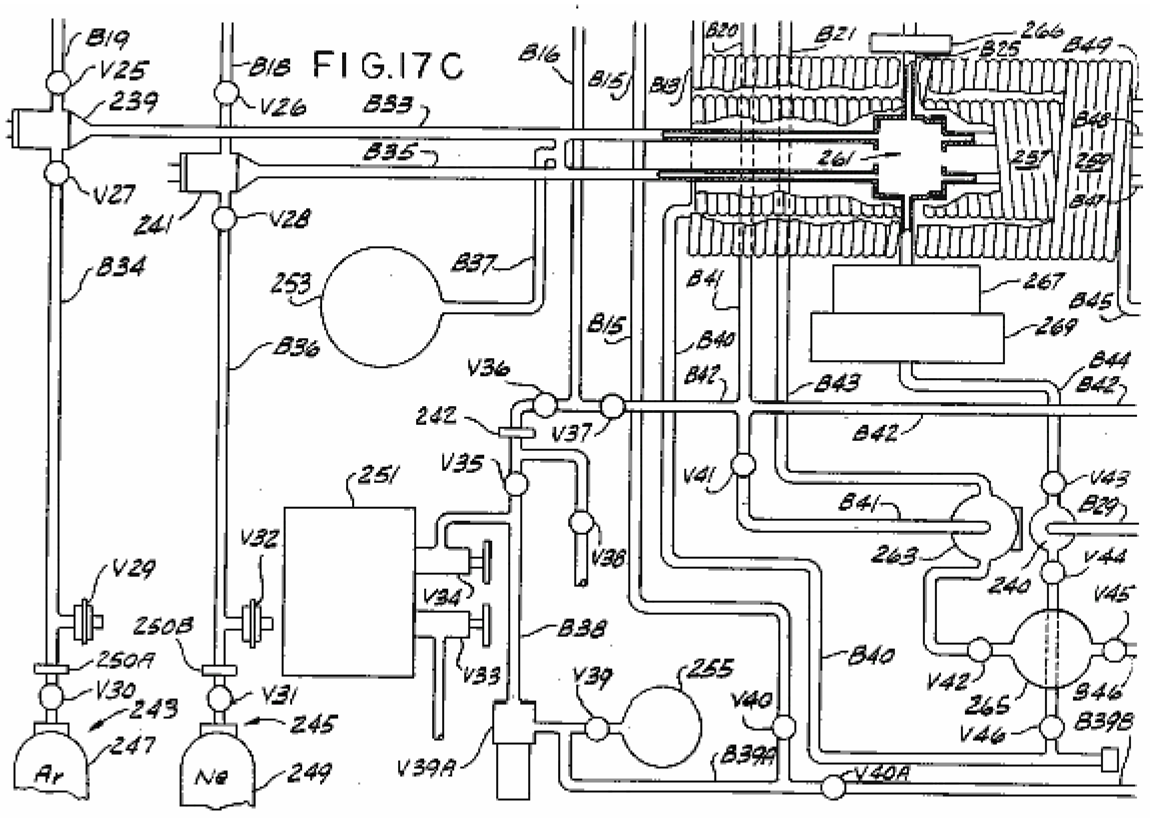

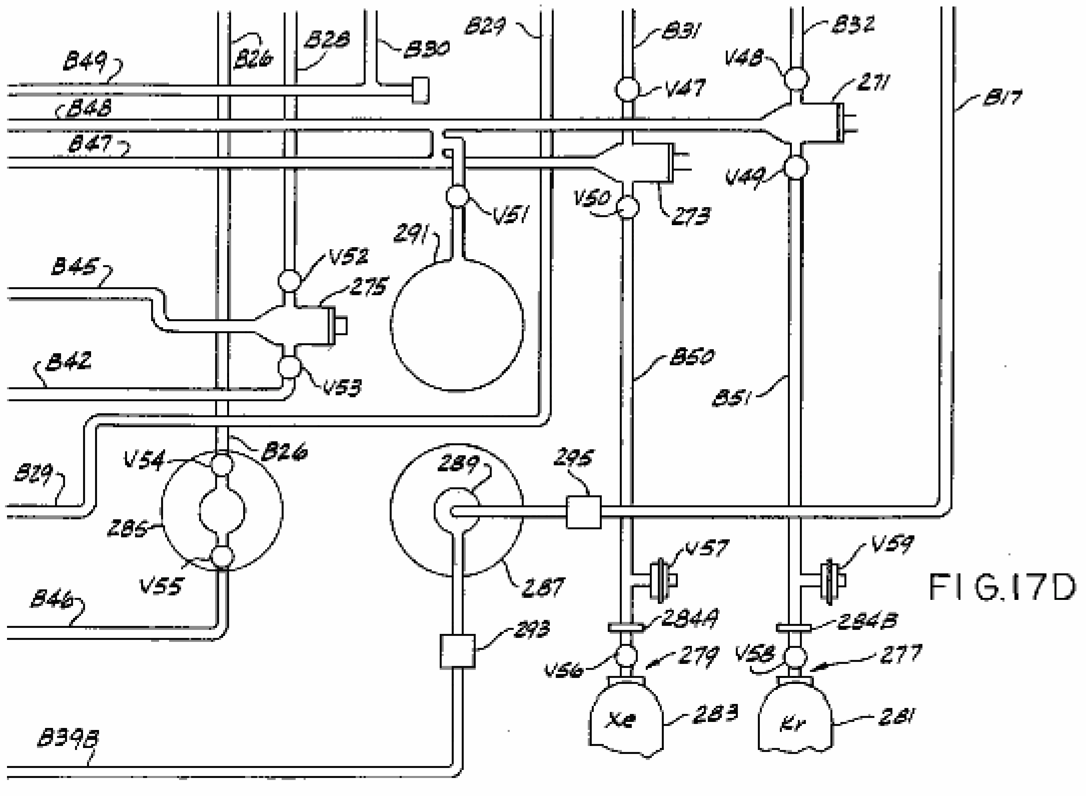

FIG.17D

Fig.18 is a schematic diagram of the mixing chamber portion of the fuel mixer shown in **Figs.17A-17D**:

FIG.18

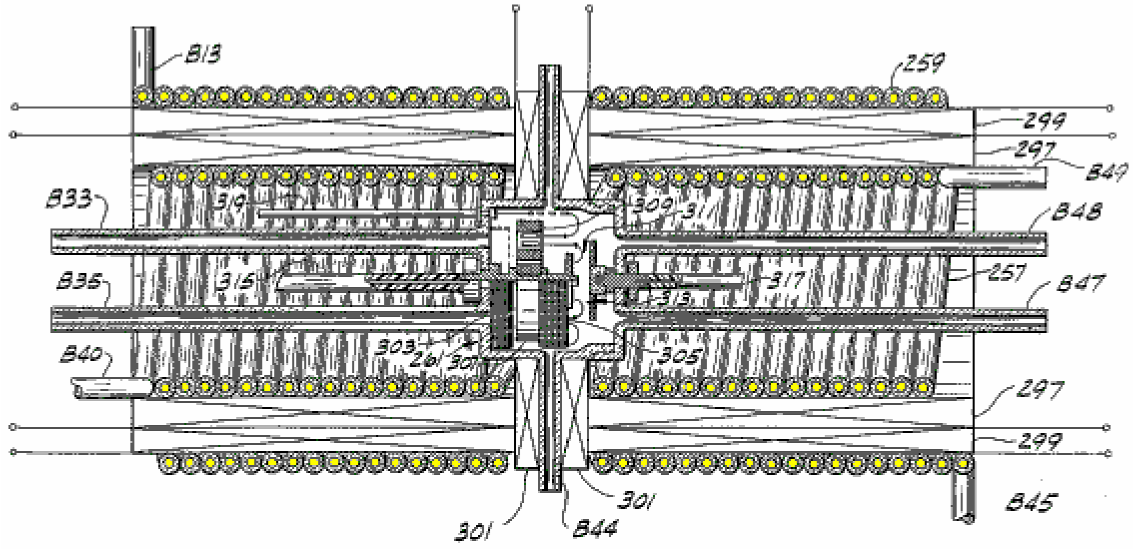

Figs.19A-19E are schematic diagrams of a portion of the electrical circuitry of the fuel mixer shown in **Figs.17A-17D**:

FIG.19A

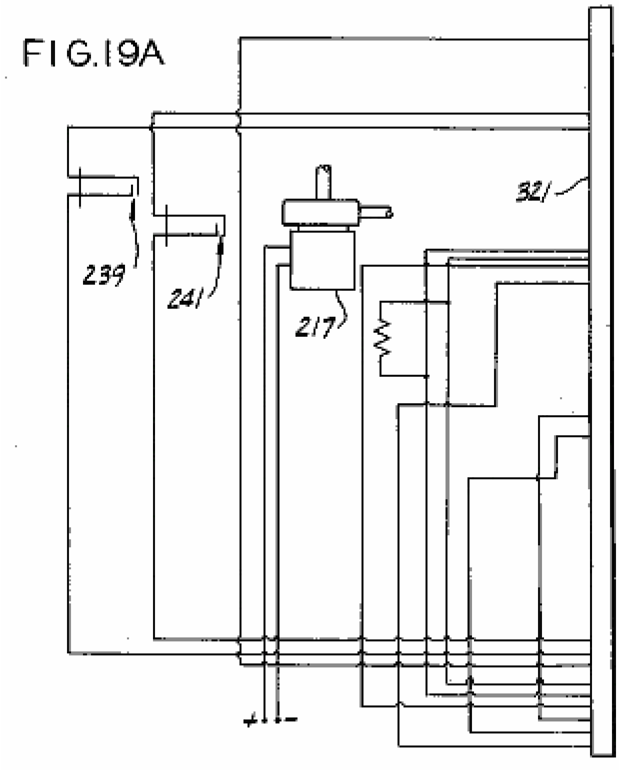

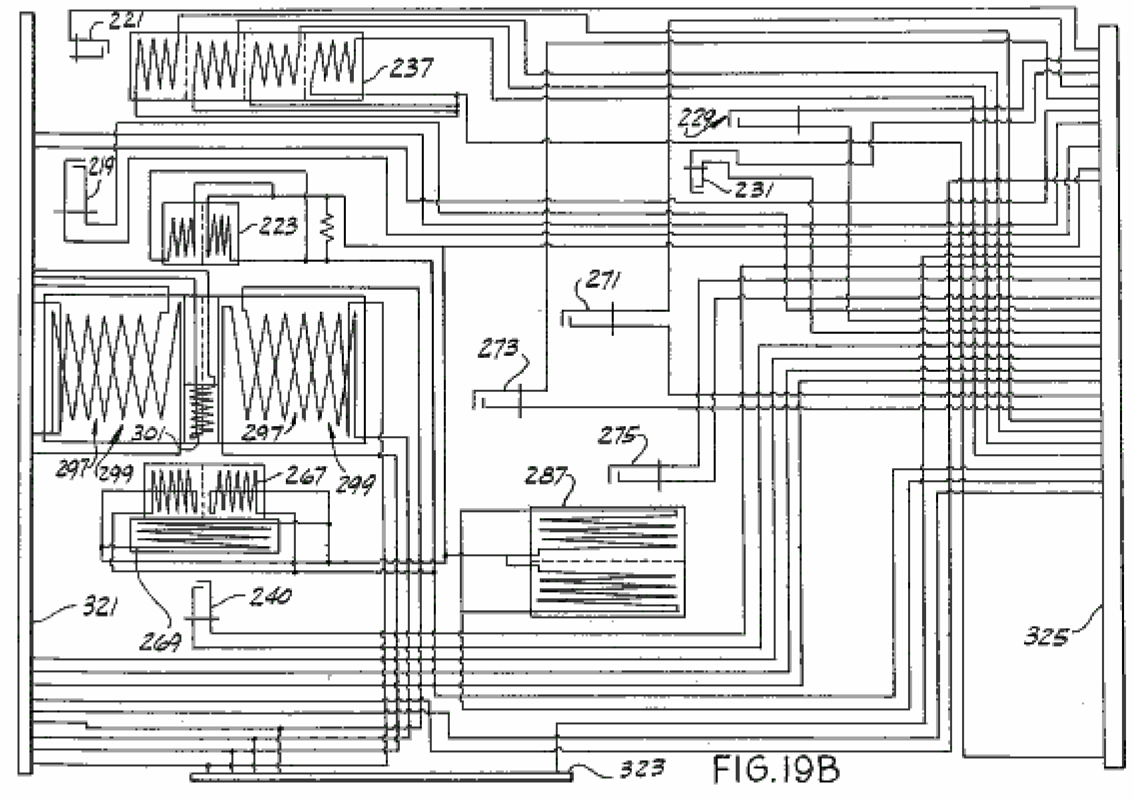

FIG.19B

FIG.19C

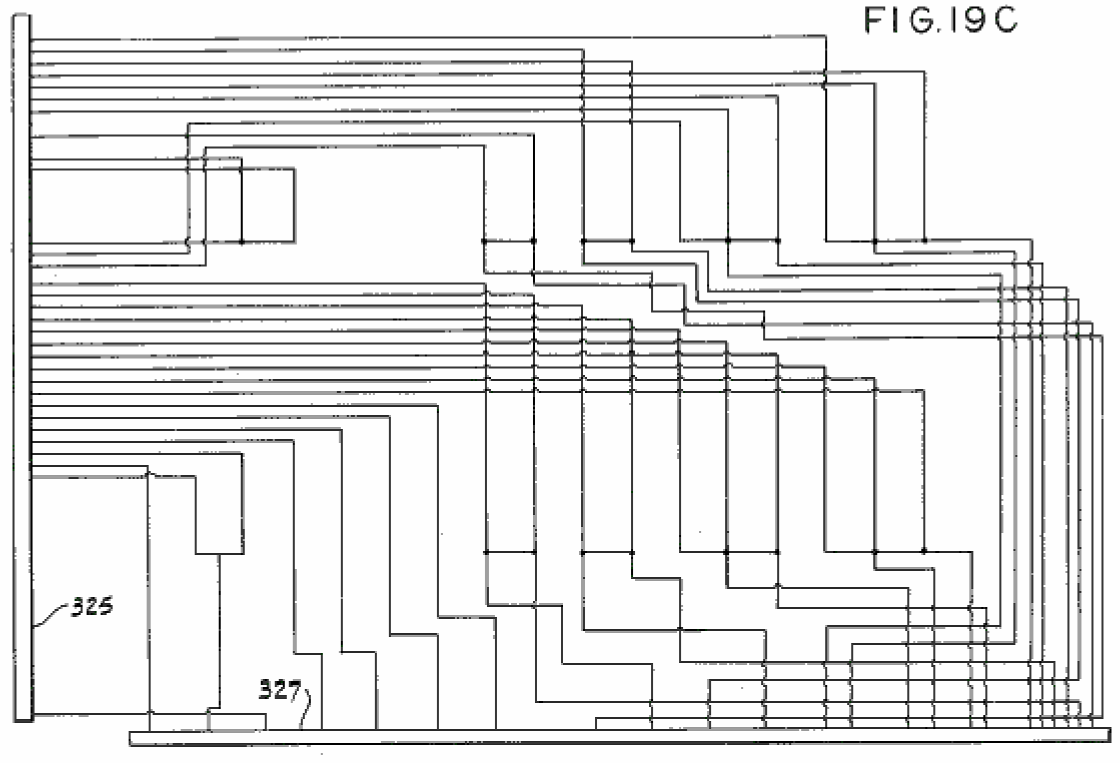

FIG.19D

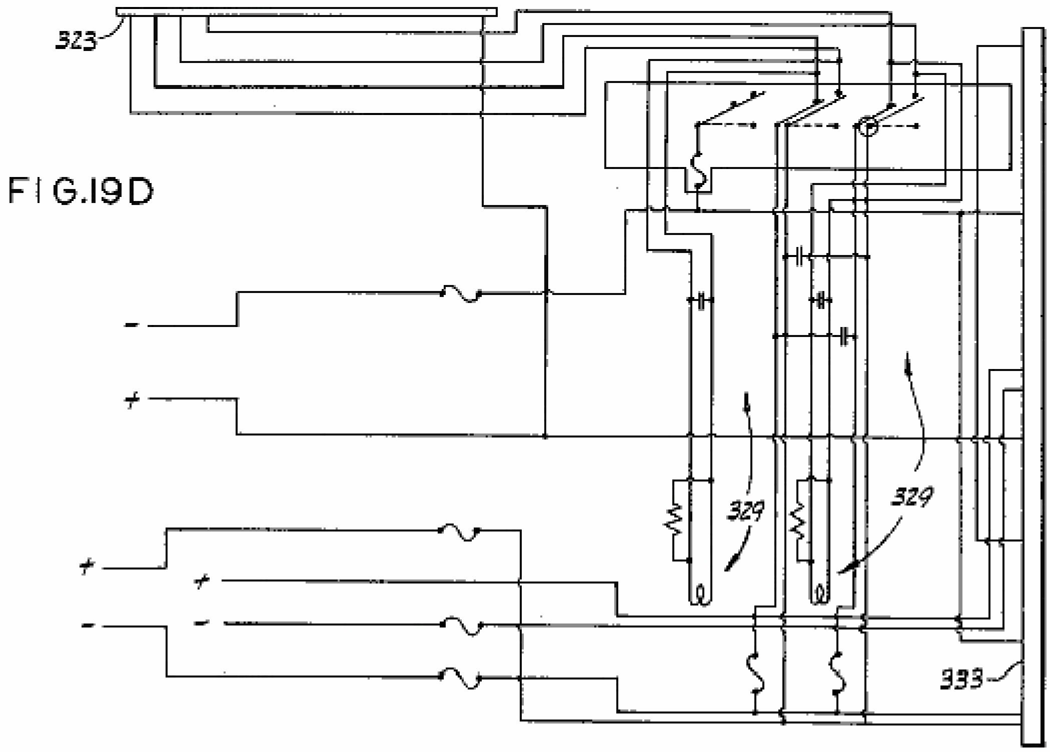

FIG.19E

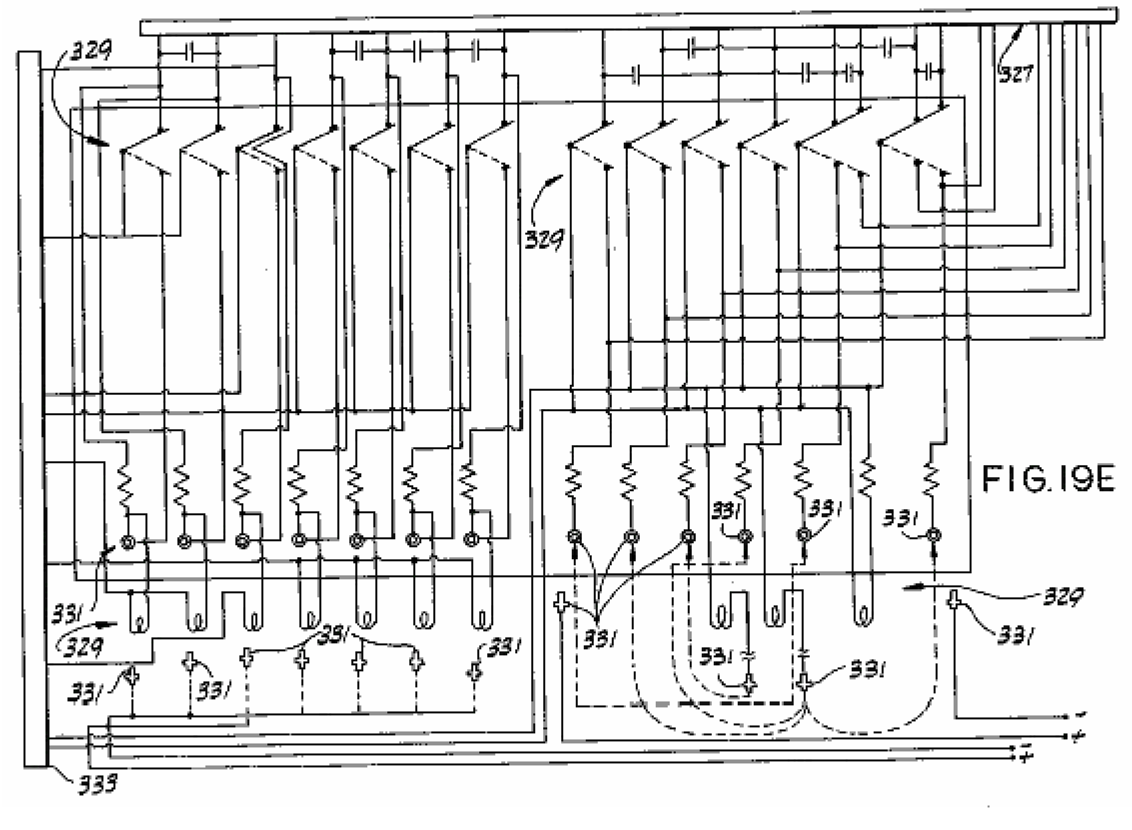

Figs.20A-20F are schematic diagrams of the rest of the electrical circuitry of the fuel mixer shown in **Figs.17A-17D**:

FIG.20A

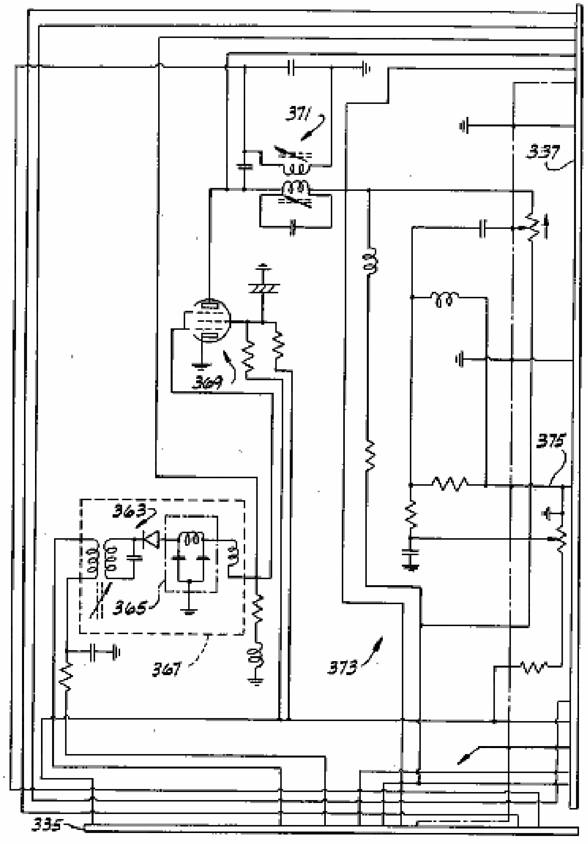

FIG.20B

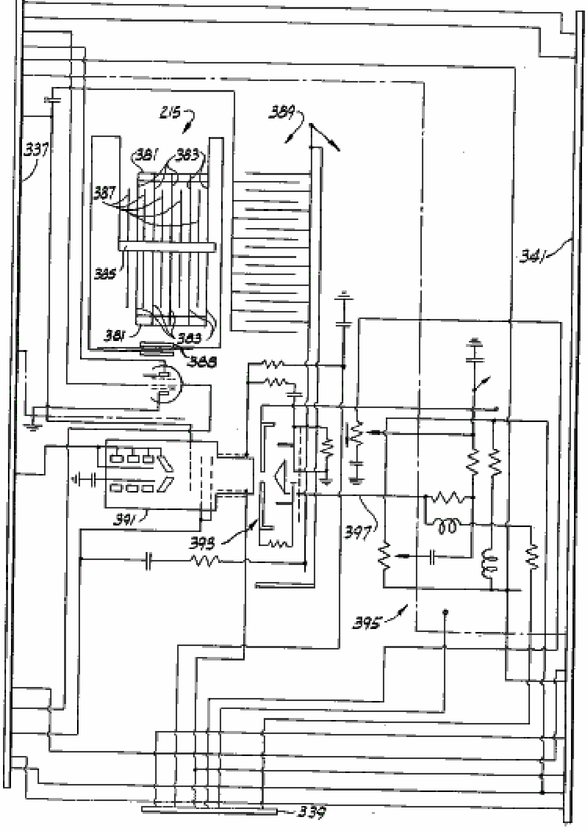

FIG. 20C

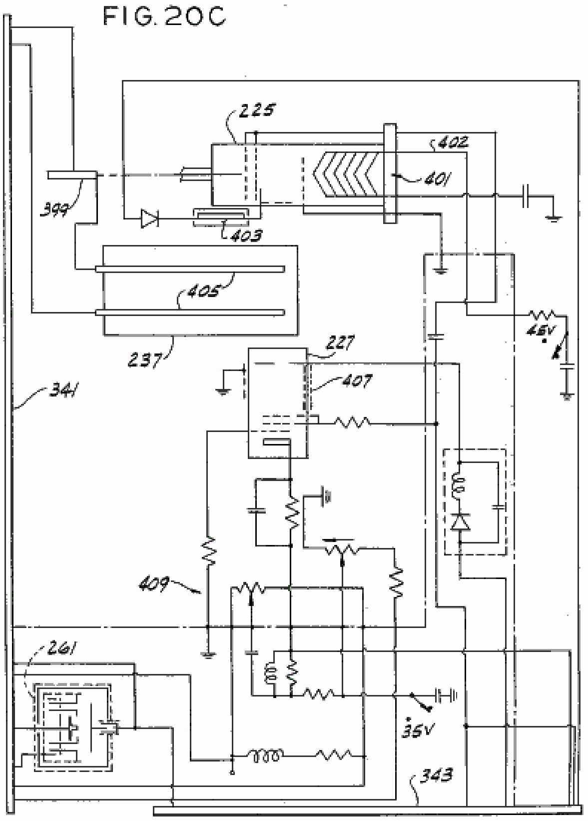

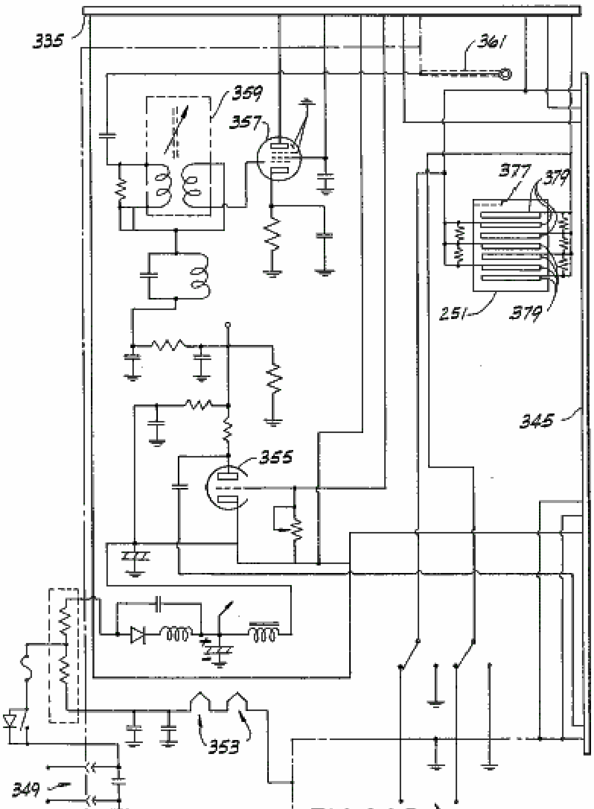

FIG. 20D

FIG. 20E

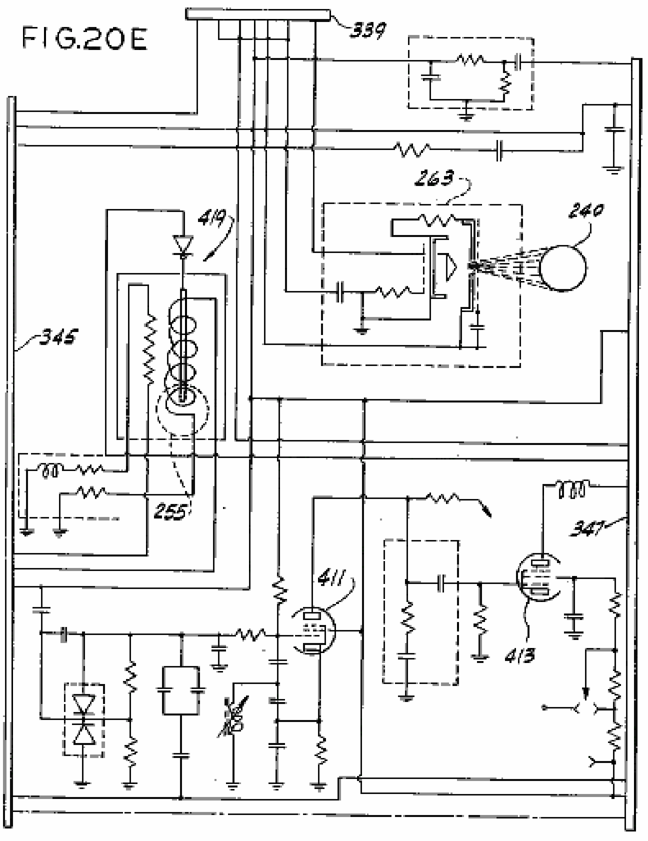

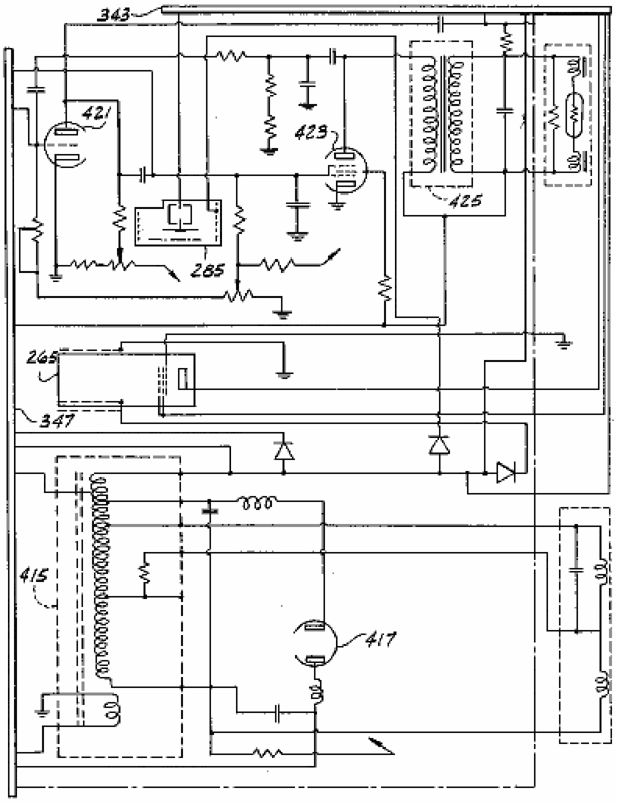

FIG. 20F

Note: Corresponding reference characters indicate corresponding parts throughout all of the views of the drawings.

DESCRIPTION OF A PREFERRED EMBODIMENT

FIG.1

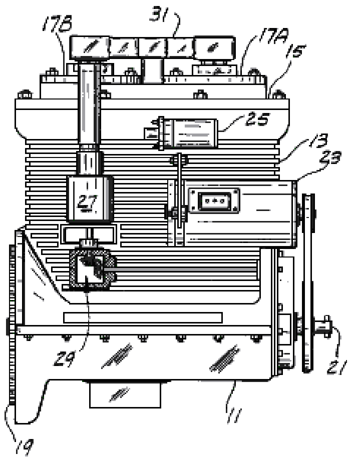

FIG.2

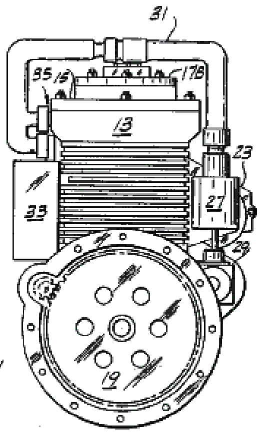

Referring to the drawings, there is shown in **Fig.1** a two-cylinder engine **11** comprising a block **13** preferably of a nonmagnetic material such as aluminium, a nonmagnetic head **15**, and a pair of cylinder heads **17A** and **17B** of a magnetisable material such as 0.1-0.3% carbon steel. Also shown in **Fig.1** is a flywheel **19** attached to a crankshaft **21**, a generator **23**, a high-voltage coil **25**, a distributor **27** attached by a gear arrangement shown in part at **29** to the crankshaft, and an electrical cable **31** which is connected to the distributor and to both cylinders. Cable **31** (see **Fig.2**) is also electrically connected to a switching unit **33** which preferably comprises a plurality of silicon controlled rectifiers (SCRs) or transistors. Also shown in **Fig.2** is a second electrical connection of the cable to the cylinders, which connection is indicated generally at **35**. Turning to **Fig.3**, there is shown a starter motor **37** as well as a clearer view of the connections **35** to each cylinder.

FIG.3

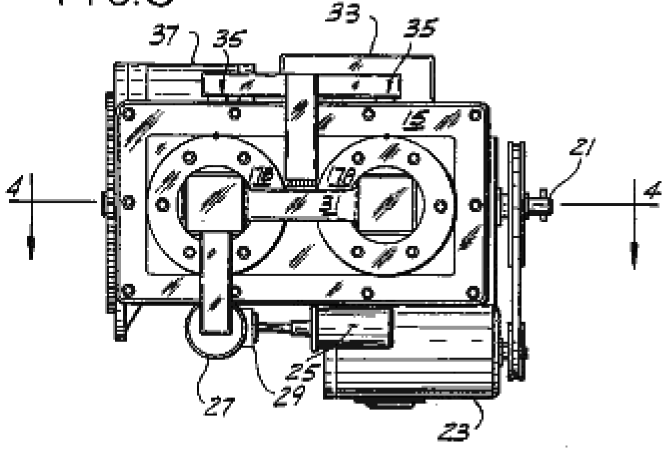

A cross section of the engine is shown in **Fig.4**. The cylinder heads have associated with them, pistons marked **39A** and **39B**, respectively, the heads and pistons define opposite ends of a pair of chambers or cylinders **41A** and **41B** respectively. The pistons are made of a magnetisable material. Although only two chambers are shown, the engine can include any number. It is preferred, however, for reasons set forth below, that there be an even number of cylinders. Pistons **39A** and **39B** move axially with respect to their corresponding heads from a first position (the position of piston **39A** in **Fig.4**) to a second position (the position of piston **39B**) and back, each piston being suitably connected to crankshaft **21**. As shown in **Fig.4**, this suitable connection can include a connecting rod **CR**, a wrist pin **WP**, and a lower piston portion or power piston **LP**. The connecting rods and/or power pistons must be of non-magnetisable material. When a split piston is used, pistons **39A** and **39B** are suitably connected to lower piston portions **LP** by bolting, spring-loaded press fitting, or the like. Pistons **39A** and **39B** are attached 180 degrees apart from each other with respect to the crankshaft so that when one piston is at top dead centre (TDC) the other will be at bottom dead centre (BDC) and vice versa. Additional pairs of cylinders may be added as desired but the pistons of each pair should be attached to the crankshaft 180 degrees from each other. Of course, the relative position of each piston with respect to its respective head determines the volume of its chamber.

FIG. 4

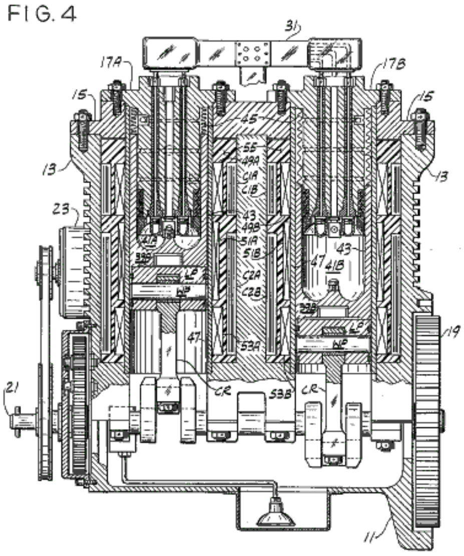

Integral with the piston bodies are walls **43** which form the walls of the chambers. Preferably, a set of air-tight bellows **45**, of similar construction to that sold under the designation ME 197-0009-001 by the Belfab Company of Daytona Beach, Fla., are suitably secured between walls **43** and cylinder heads **17A** and **17B** respectively to form an airtight seal between each piston and its cylinder head. While walls **43** and piston **39** can be made of one magnetisable piece, a preferable and more efficient construction has walls **43** separate from piston **39** and made of a non-magnetisable material. The length of time that a given engine will run is a function of the efficacy of its sealing system. Means, such as bellows **45**, for hermetically sealing the cylinders will optimise said length of time. Such a hermetic seal should be secured between walls **43** and cylinder heads **17** to form an airtight seal between them. This seal could be the airtight bellows system shown or some other sealing system such as an oil sealing system.

Cylinder bodies **47** (see **Fig.4**), made of nonmagnetic material such as stainless steel, extend from the point of attachment of each bellows to its cylinder head to the base of the corresponding pistons, forming sleeves for each piston in which each piston moves. Three sets of electric coils **49A, 49B, 51A, 51B**, and **53A, 53B**, are wound around sleeves **47**, and hence around chambers **41A** and **41B**, respectively, for generating magnetic fields in the chambers, those coils being generally coaxial with their respective chambers. Each of these coils has an inductance of approximately 100 mH. It is preferred that 14-19 gauge wire be used to wind these coils and that the coils be coated with a suitable coating, such as #9615 hardener from Furane Plastics, Inc., of Los Angeles, California, or the coating sold by the Epoxylite Corp. of South El Monte, California under the trade designation Epoxylite 8683. Each chamber is also surrounded by a pair of capacitors, **C1A**, **C1B** and **C2A, C2B** wound around it, capacitors **C1A**, **C1B** having a capacitance of approximately 1.3 microfarads and capacitors **C2A, C2B** having a capacitance of approximately 2.2 microfarads. The coils and capacitors are potted in hardened epoxy of fibreglass material **55**. The epoxy resin and hardener sold under the designations EPI Bond 121 and #9615 hardener by Furane Plastics, supra, are satisfactory, but other epoxy material which will remain stable at temperatures up to 200 degrees F would probably also be acceptable. It is preferred that a small amount of graphite such as that sold under the trade designation Asbury 225 by Asbury Graphite, Inc. of Rodeo, Calif., be included in the epoxy potting to prevent nuclear particles formed in the chamber from escaping from the apparatus. Ten to 15% graphite to epoxy by weight is more than enough.

FIG.5

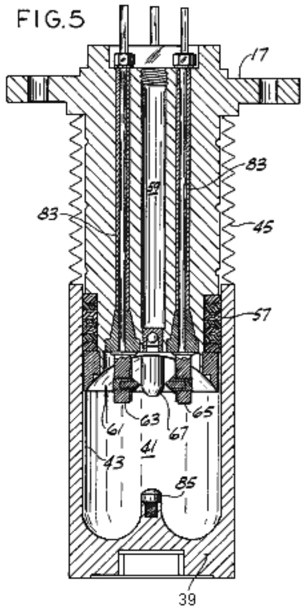

A typical cylinder is shown in section in **Fig.5**, showing the piston in its fully extended position with respect to the head and showing many details on a somewhat larger scale than that of **Fig.4**. A set of seals **57**, made of a material such as that sold under the trade designation Teflon by the DuPont Company of Delaware, is positioned between the cylinder head and wall **43** to prevent escape of the working fluid from chamber **41**. A filler tube **59** with a ball valve at its lower end is used in filling the chamber with the working fluid but is closed during operation of the engine.

The cylinder head has a generally concave depression therein, indicated at **61**, which defines the top end of the chamber. A plurality of electrodes for exciting and igniting the working fluid extend through the cylinder head into the chamber. Two of those electrodes, shown in section in **Fig.5** and labelled **63** and **65**, have tungsten points **75**, while the other two, labelled **67** and **69** (see **Fig.6** for electrode **69**) are containers called, respectively, the anode and the cathode. The electrodes are generally equidistantly spaced from the axes of their chambers and are generally coplanar to each other, their mutual plane being perpendicular to the axes of their chambers. Each electrode is positioned 90 degrees from adjacent electrodes in this embodiment and are generally positioned so that a line from the anode to the cathode and a line between the other two electrodes intersect at a focal point generally on the axis of the chamber. The radial distance of each electrode from the focal point is fixed for a reason discussed below. The general construction of electrodes **63** and **65** is shown in **Fig.6** to **Fig.9**. These electrodes include a conductive rod **71** (see **Fig.7**) preferably of brass or copper; a conductive, generally rectangular plate **73** (see **Fig.6**, **Fig.8** and **Fig.9**); and tungsten point **75** mounted in a conductive base **77** generally at right angles to the plate (see **Fig.8** and **Fig.9**).

FIG.10

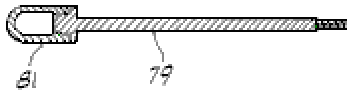

The construction of the anode and cathode is shown in **Fig.10**. Each includes a conductive rod **79** and a container **81**. The cathode container is substantially pure aluminium. If desired, aluminium alloys with, e.g., less than 5% copper, 1% manganese and 2% magnesium may be used. In one embodiment, the cathode container contains approximately four grams of thorium-232 and is filled with argon. In this same embodiment the anode container is copper or brass and contains approximately two grams of rubidium-37 and approximately three grams of phosphorus-15 hermetically sealed in mineral oil. In a second embodiment, the cathode is still aluminium, but it contains at least two grams of rubidium-37 in addition to the approximately four grams of thorium-232 in either argon or mineral oil. In this second embodiment, the anode is also aluminium and contains at least 4 grams of phosphorus-15 and at least 2 grams of thorium-232 in argon or mineral oil. Alternatively, mesothorium may be used for the thorium, strontium-38 may be used for the rubidium, and sulphur-16 may be used for the phosphorus. Rods **71** and **79** extend through cylinder head **17** to the exterior where electrical connections are made to the electrodes. Each rod is surrounded by one of four insulating sleeves **83**, the lower portion of each of which being flared outwards to seat firmly in the cylinder head.

FIG.11

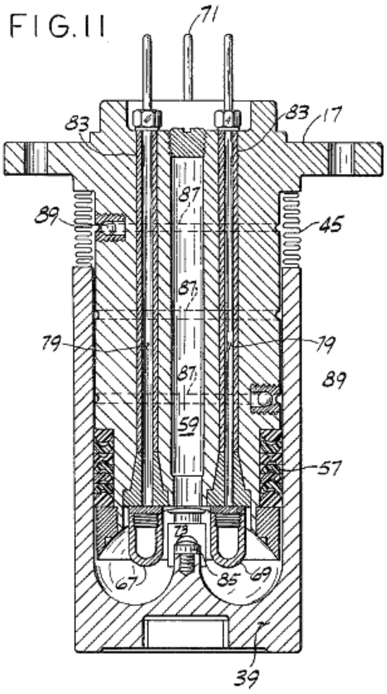

The piston has a generally semi-toroidal depression in its upper surface (see **Fig.4**, **Fig.5** and **Fig.11**) and carries a conductive discharge point **85** of copper, brass or bronze generally along the axis of the chamber. When the piston is generally extended, the discharge point is a substantial distance from the electrodes. But when the piston is in its upper position (see **Fig.11**), the discharge point is positioned generally between all four electrodes and close to them, there being gaps between the electrodes and the discharge point. When the piston is in this upper position, the electrodes extend somewhat into the semi-toroidal depression in the piston's upper surface and the chamber is generally toroidal in shape. The volume of the chamber shown in **Fig.11** can be from approximately 6.0 cubic inches (100 cc) or larger. Given the present state of the art, 1500 cubic inches (25,000 cc) appears to be the upper limit. A plurality of ports **87** and one-way valves **89** return working fluid which escapes from the chamber back into it, so long as a sealing system such as bellows **45** is used.

An alternative cylinder head/piston arrangement is shown in **Fig.12**. The main difference between this arrangement and that of **Fig.5** is that the chamber walls, here labelled **43'** are integrally formed with the head. As a result seals **57** are carried by the piston rather than by the head, the attachment of bellows **45** is somewhat different, and the fluid-returning valves and ports are part of the piston rather than of the head. Otherwise these arrangements are substantially the same. Preferably, the cylinders of both arrangements are hermetically sealed.

FIG.12A

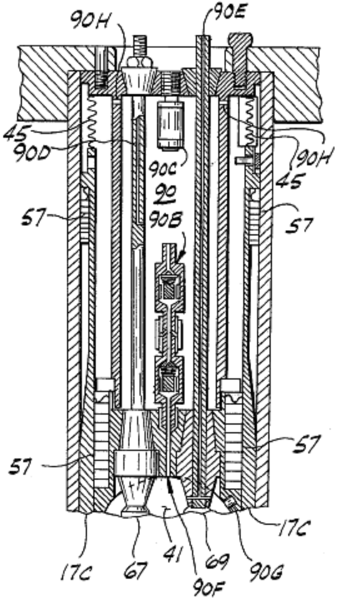

An additional embodiment of a cylinder head/piston arrangement used in the present invention is shown in **Fig.12A**. In this arrangement, a tapered sleeve **17C** mates between cylinder head **17** and piston **39**, a plurality of seals **57** are provided, and electrodes **67** and **69** have a somewhat different shape. Also, in this embodiment, a chamber **90** is provided in cylinder head **17** for storing additional working fluid, i.e., the purpose of chamber **90** is to extend the operating time between refuelling by circulating the working fluid, viz. the mixture of inert gases described, between cylinder **41** and chamber **90** as needed so that the reactions in cylinder 41 are not adversely affected. To accomplish this, this embodiment further includes a two-way circulation valve **90B**, a relief valve **90C**, and duct or passageway **90D** for evacuating and filling chamber **90**, a duct or passageway **90E** for evacuating and filling cylinder **41**, a passageway **90F** between chamber **90** and cylinder **41** in which two-way valve **90B** is disposed, a sensor **90G** and a plurality of small pressure relief holes **90H**. Relief holes **90H** serve to relieve the pressure on bellows **45** as the piston moves from BDC to TDC.

In larger engines holes **90H** should be replaced with one way valves. Two-way valve **90B** is either controlled by sensor **90G** or is manually operated, as desired, to allow the circulation of gases between chamber **90** and cylinder **41**. The sensor itself detects a condition requiring the opening or closing of valve **90B** and signals that condition to the valve. For example, sensor **90G** can measure pressure in cylinder **41** while the piston is at top dead centre. A predetermined cylinder pressure can cause a spring to compress, causing the valve to open or close as appropriate. A subsequent change in the cylinder pressure would then cause another change in the valve. Another sensor (not shown) could measure the physical location of the piston by a physical trip switch or an electric eye, or it could measure angular distance from top dead centre on the distributor or the crankshaft. The sensor must keep the gas pressure in chamber **90** at one atmosphere, plus or minus 5%, and at top dead centre, cylinder **41** should also be at that pressure. If gas is lost from the system, it is more important to maintain the proper pressure in cylinder **41**. Alternatively, a small passage between cylinder **41** and chamber **90** could function in a passive manner to satisfactorily accomplish the same result. From the above, it can be seen that this embodiment utilises the hollowed out centre of the cylinder head for storing additional working fluid, which fluid is circulated between chamber **90** and cylinder **41** through a valve system comprising valve **90B** and sensor **90G** with the moving piston causing the gases to circulate.

The electrical circuitry for engine **11** includes (see **Fig.13A**) a 24 V battery **B1**, an ignition switch **SW1**, a starter switch **SW2**, starter motor **37**, a main circuit switch **SW4**, a step-down transformer **93** (e.g., a 24 V to 3.5 V transformer), a switch **SW6** for supplying power to ignition coil **25** (shown in **Fig.13A** and **Fig.13B** as two separate ignition coils **25A** and **25B**), and various decoupling diodes.

The circuitry of **Fig.13A** also includes a high frequency voltage source or oscillator **95** for supplying rapidly varying voltage through two electronic current regulators **97A, 97B** (see **Fig.13B** for regulator **97B**) to the anode and cathode electrodes of each cylinder, and a high-voltage distributor **99** for distributing 40,000 volt pulses to the cylinders. Distributor **99** has two wipers **99A** and **99B** and supplies three pulses to each cylinder per cycle. Wipers **99A** and **99B** are 180 degrees out of phase with each other and each operates to supply pulses to its respective cylinder from TDC to 120 degrees thereafter. More pulses are desirable and therefore a better distributor arrangement (shown in **Fig.14**) may be used. The arrangement shown in **Fig.14** includes two ignition coils **101**, **103**, a simple distributor **105** and a pair of magnetic ignition circuits **107** and **109**, described below. Of course many other ignition systems could also be developed. For example, a single circuit might be used in place of circuits **107**, **109**, additional induction coils might be added to the ignition coils to assist in starting or a resistor could be added to the ignition coils to ensure a constant 40,000 volt output regardless of engine rpm. Also, a solid-state distributor could be used instead of the mechanical distributor labelled **99**.

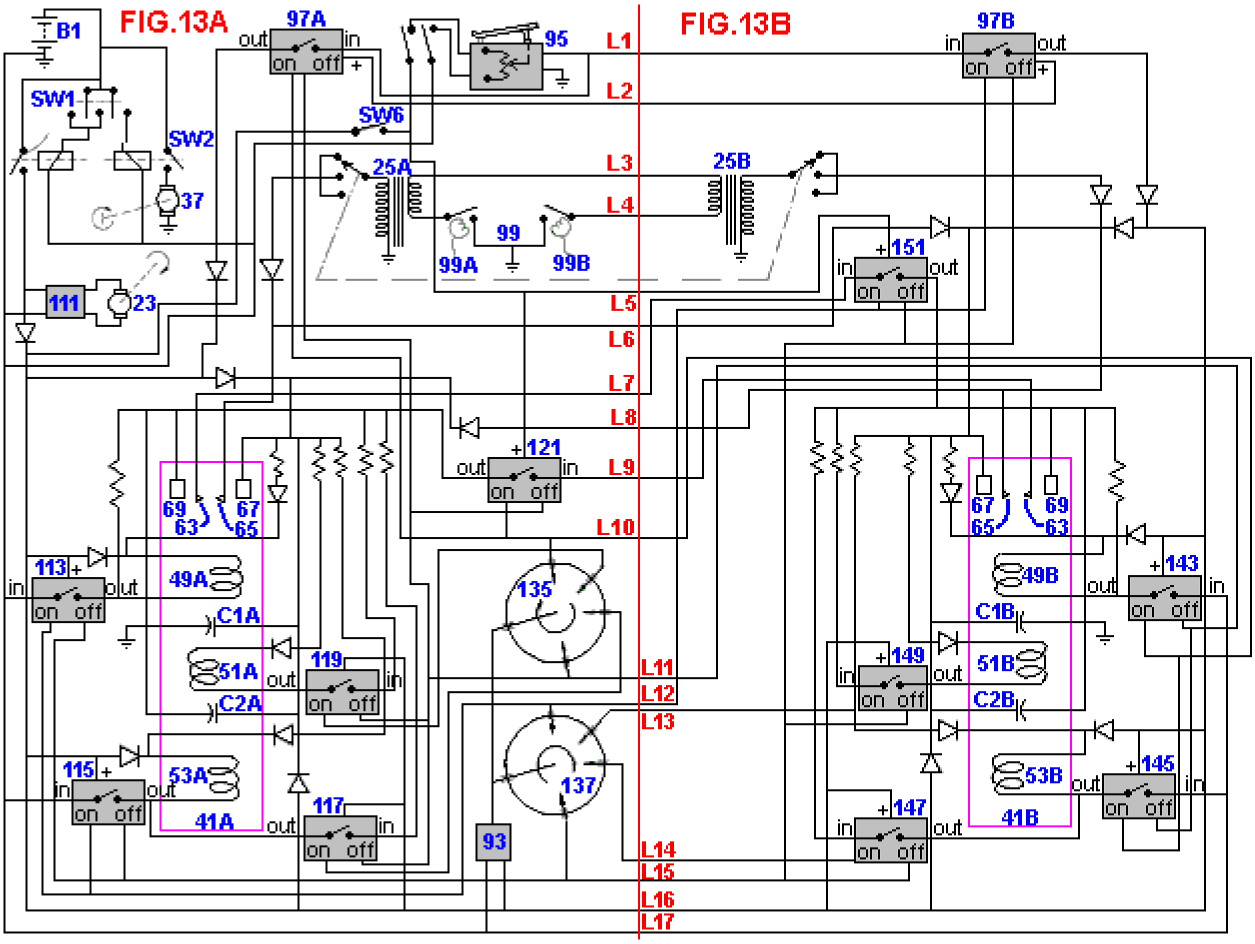
FIG.13A
FIG.13B

Referring back to **Fig.13A**, for engines of more than 1000 hp a high frequency source **95** could be used to control engine RPM. The output frequency is controlled by a foot pedal similar to an accelerator pedal in a conventional vehicle. The output frequency varies through a range of from approximately 2.057 MHz to approximately 27.120 MHz with an output current of approximately 8.4 amps. The speed of engine **11** is controlled by the output frequency of source **95**. The high frequency current, as described below, is directed to each cylinder in turn by circuitry described below. For engines producing from 300 to 1000 hp (not shown), a high frequency source having a constant output of 27.120 MHz with a constant current of 3.4 amps which is continually supplied to all cylinders could be used. In this case an autotransformer, such as that sold under the trade designation Variac by the General Radio Company, controlled by a foot pedal varies the voltage to each cylinder from 5 to 24 volts DC at 4.5 amps, using power from the batteries or the alternator. The DC current from the Variac is switched from cylinder to cylinder by two small electronic switching units which in turn are controlled by larger electronic switching units. For the smallest engines (not shown), a high frequency generator could supply a constant output of 27.120 MHz with a constant current of 4.2 amps to the cylinders during starting only. Speed control would be achieved by a Variac as described above which controls the DC voltage supplied to the cylinders in turn within a range of from 5 to 24 volts at a current of 5.2 amps. In this case, once the engine is running, the full voltage needed to ignite the (smaller) quantity of gases is obtained from the electrodes in the other cylinder of the pair.

The circuitry of **Fig.13A** also includes the generator, a voltage regulator and relay **111**, five electronic switching units **113, 115, 117, 119** and **121**, electrodes **63** and **65** associated with chamber **41A** (hereinafter chamber **41A** is sometimes referred to as the "**A**" cylinder and chamber **41B** is sometimes referred to as the "**B**" cylinder), anode **67**, cathode **69**, magnetic coils **49A, 51A** and **53A**, capacitors **C1A** and **C2A**, and various decoupling diodes. The electronic switching units can take a variety of forms. For example, one simple form (see **Fig.15**) includes a pair of SCRs **123** and **125**. The switching unit is connected at terminal IN to the corresponding line on the input side and at terminal OUT to the corresponding line on the output side. When a voltage of 3.5 volts is supplied from the battery through a distributor, for example, to the ON terminal, SCR **125** conducts, thereby completing a circuit through the switching unit. Conversely, when 3.5 volts is applied to the OFF terminal, SCR **123** conducts and the circuit is broken. Likewise, the circuit for regulators **97A** and **97B** (see **Fig.16**) includes two SCRs **127** and **129** and a PNP transistor **131**. In this circuit when SCR **127** is gated on, it forces transistor **131** into conduction, thereby completing the circuit through the regulator. When SCR **129** is gated on, the circuit through transistor **131** is broken. A number of other configurations may be used in place of those of **Fig.15** and **Fig.16** and not all would use SCRs. For example, one triode could be used to replace two main SCRs, or transistors could be used instead of SCRs.

A pair of low-voltage distributors **135** and **137** are also shown in **Fig.13A**. Distributors **135** and **137** provide gating pulses for the electronic switching units of **Fig.13A** and **Fig.13B**. Of course, solid-state distributors could also replace mechanical distributors **135** and **137**.

In addition, the engine circuitry includes (see **Fig.13B**) five electronic switching units **143, 145, 147, 149** and **151** corresponding to units **113, 115, 117, 119** and **121** of **Fig.13A**, electrodes **63** and **65** of the "**B**" cylinder, anode **67**, cathode **69**, electric coils **49B, 51B** and **53B**, capacitors **C1B** and **C2B**, and various decoupling diodes. The circuitry of **Fig.13B** is generally the same as the corresponding portions of **Fig.13A**, so the description of one for the most part applies to both. Of course, if more than two cylinders are used, each pair of cylinders would have associated with them, circuitry such as that shown in **Fig.13A** and **Fig.13B**. The circuitry of **Fig.13A** is connected to that of **Fig.13B** by the lines **L1-L17**.

The working fluid and the fuel for the engine are one and the same and consist of a mixture of inert gases, which mixture consists essentially of helium, neon, argon, krypton and xenon. It is preferred that the mixture contain 35.6% helium, 26.3% neon, 16.9% argon, 12.7% krypton, and 8.5% xenon by volume, it having been calculated that this particular mixture gives the maximum operation time without refuelling. Generally, the initial mixture may contain, by volume, approximately 36% helium, approximately 26% neon, approximately 17% argon, approximately 13% krypton, and approximately 8% xenon. This mixture results from a calculation that equalises the total charge for each of the gases used after compensating for the fact that one inert gas, viz. radon, is not used. The foregoing is confirmed by a spectroscopic flashing, described below, that occurs during the mixing process. If one of the gases in the mixture has less than the prescribed percentage, it will become over-excited. Similarly, if one of the gases has more than the prescribed percentage, that gas will be under-excited. These percentages do not vary with the size of the cylinder.

Operation of the engine is as follows: At room temperature, each cylinder is filled with a one atmosphere charge of the fuel mixture of approximately 6 cubic inches (100 cc) /cylinder (in the case of the smallest engine) by means of filler tube **59**. The filler tubes are then plugged and the cylinders are installed in the engine as shown in **Fig.4**, one piston being in the fully extended position and the other being in the fully retracted position. To start the engine, the ignition and starter switches are closed, as is switch **SW6**. This causes the starter motor to crank the engine, which in turn causes the wiper arms of the distributors to rotate. The starting process begins, for example, when the pistons are in the positions shown in **Fig.4**. Ignition coil **25** and distributor **99** (see **Fig.13A**) generate a 40,000 volt pulse which is supplied to electrode **65** of chamber **41A**. Therefore, a momentary high potential exists between electrodes **63** and **65** and the plates on each. The discharge point on piston **39A** is adjacent these electrodes at this time and sparks occur between one or more of the electrodes and the discharge point to partially excite, e.g. ionise, the gaseous fuel mixture.

The gaseous fuel mixture in cylinder **41A** is further excited by magnetic fields set up in the chamber by coil **49A**. This coil is connected to the output side of electronic switching unit **121** and, through switching unit **113**, to the battery and the generator. At this time, i.e., between approximately 5 degrees before TDC and TDC, distributor **135** is supplying a gating signal to unit **121**. Any current present on the input side of unit **121**, therefore, passes through unit **121** to energise coil **49A**. Moreover, high frequency current from oscillator **95** is supplied via regulator **97A** to coil **49A**. This current passes through regulator and relay **97A** because the gating signal supplied from distributor **135** to unit **121** is also supplied to relay **97A**. The current from switching unit **121** and from oscillator **95** also is supplied to the anode and the cathode. It is calculated that this causes radioactive rays (x-rays) to flow between the anode and the cathode, thereby further exciting the gaseous mixture.

As the starter motor continues cranking, piston **39A** begins moving downward, piston **39B** begins moving upward, and the wiper arms of the distributors rotate. (Needless to say, a solid-state distributor would not rotate. The distributor could utilise photo cells, either light or reflected light, rather than contact points). After 45 degrees of rotation, distributor **135** supplies a gating pulse to electronic switching unit **119**, thereby completing a circuit through unit **119**. The input to unit **119** is connected to the same lines that supply current to coil **49A**. The completion of the circuit through unit **119**, therefore, causes coil **51A** to be energised in the same manner as coil **49A**. After an additional 45 degrees of rotation, distributor **135** gates on electronic switching unit **117** which completes a circuit to the same lines. The output terminal of unit **117** is connected to coil **53A**, and so this coil is energised when unit **117** is gated on. All three coils of the "**A**" cylinder remain energised and, therefore, generating magnetic fields in chamber **41A** until piston **39A** reaches BDC.

As piston **39A** moves from TDC to BDC, two additional 40,000 volt pulses (for a total of three) are supplied from distributor **99** to the "**A**" cylinder. These pulses are spaced approximately 60 degrees apart. If more pulses are desired, the apparatus shown in **Fig.14** may be used. In that case, the solenoids indicated generally at **107A, 107B** and **109A, 109B** are energised to create a number of rapid, high-voltage pulses which are supplied as indicated in **Fig.14** to the cylinders, distributor **105** operating to supply pulses to only one of the pair of cylinders at a time.

As piston **39A** reaches BDC, distributor **135** sends a pulse to the OFF terminals of electronic switching units **121, 117** and **119**, respectively, causing all three coils **49A, 51A** and **53A** to be de-energised. At about the same time, i.e., between approximately 5 degrees before TDC and TDC for piston **39B**, distributor **137** supplies a gating pulse to the ON terminals of electronic switching units **113** and **115**. The power inputs to units **113** and **115** come from the generator through regulator **111** and from the battery, and the outputs are directly connected to coils **49A** and **53A**. Therefore, when units **113** and **115** are gated on, coils **49A** and **53A** are reenergised. But in this part of the cycle, the coils are energised with the opposite polarity, causing a reversal in the magnetic field in chamber **41A**. Note that coil **51A** is not energised at all during this portion of the cycle. Capacitors **C1A** and **C2A** are also charged during the BDC to TDC portion of the cycle. (During the TDC to BDC portion of the cycle, these capacitors are charged and/or discharged by the same currents as are supplied to the anode and cathode since they are directly connected to them).

As piston **39A** moves upwards, electrodes **63** and **65** serve as pick-up points in order to conduct some of the current out of chamber **41A**, this current being generated by the excited gases in the chamber. This current is transferred via line **L7** to electronic switching unit **151**. The same gating pulse which gated on units **113** and **115** was also supplied from distributor **137** via line **L12** to gate on switching unit **151**, so the current from the electrodes of chamber **41A** passes through unit **151** to the anode, cathode and capacitors of chamber **41B**, as well as through switching units **147** and **149** to coils **49B, 51B** and **53B**. Thus it can be seen that electricity generated in one cylinder during a portion of the cycle is transferred to the other cylinder to assist in the excitation of the gaseous mixture in the latter. Note that this electricity is regulated to maintain a constant in-engine current. It should be noted, that twenty four volts from the generator is always present on electrodes **63** and **65** during operation to provide for pre-excitement of the gases.

From the above it can be seen that distributors **135** and **137** in conjunction with electronic switching units **113, 115, 117, 119, 121, 143, 145, 147, 149** and **151** constitute the means for individually energising coils **49A**, **49B, 51A, 51B, 53A** and **53B**. More particularly, they constitute the means to energise all the coils of a given cylinder from the other cylinder when the first cylinder's piston is moving from TDC to BDC and operate to energise only two (i.e., less than all) of the coils from the alternator when that piston is moving from BDC to TDC. Additionally, these components constitute the means for energising the coils with a given polarity when the piston of that cylinder is moving from TDC to BDC and for energising the first and third coils with the opposite polarity when that piston is moving from BDC to TDC.

As can also be seen, switching units **121** and **151** together with distributors **135** and **137** constitute the means for closing a circuit for flow of current from chamber **41A** to chamber **41B** during the BDC to TDC portion of the cycle of chamber **41A** and for closing a circuit for flow of current from chamber **41B** to chamber **41A** during the TDC to BDC portion of the cycle of chamber **41A**. Oscillator **95** constitutes the means for supplying a time varying electrical voltage to the electrodes of each cylinder, and oscillator **95**, distributors **135** and **137**, and regulators **97A** and **97B** together constitute the means for supplying the time varying voltage during a predetermined portion of the cycle of each piston. Moreover, distributor **99** together with ignition coils **25A** and **25B** constitute the means for supplying high-voltage pulses to the cylinders at predetermined times during the cycle of each piston.

The cycle of piston **39B** is exactly the same as that of piston **39A** except for the 180 degree phase difference. For each cylinder, it is calculated that the excitation as described above causes the gases to separate into layers, the lowest atomic weight gas in the mixture, namely helium, being disposed generally in the centre of each chamber, neon forming the next layer, and so on until we reach xenon which is in physical contact with the chamber walls. The input current (power) to do this is the calculated potential of the gas mixture. Since helium is located in the centre of the chamber, the focal point of the electrode discharges and the discharges between the anode and cathode is in the helium layer when the piston is near TDC. As the piston moves slightly below TDC, the electrons from electrodes **63** and **65** will no longer strike the tip of the piston, but rather will intersect in the centre of the cylinder (this is called "focal point electron and particle collision") as will the alpha, beta and gamma rays from the anode and cathode. Of course, the helium is in this exact spot and is heavily ionised at that time. Thus the electrodes together with the source of electrical power connected thereto constitute the means for ionising the inert gas.

It is calculated that as a result of all the aforementioned interactions, an ignition discharge occurs in which the helium splits into hydrogen in a volume not larger than 2 or 3 x 10^{-6} cubic millimetres at a temperature of approximately 100,000,000 degrees F. Of course this temperature is confined to a very small space and the layering of the gases insulates the cylinder walls from it. Such heat excites the adjacent helium so that a plasma occurs. Consequently, there is a minute fusion reaction in the helium consisting of the energy conversion of a single helium atom, which releases sufficient energy to drive the piston in that chamber toward BDC with a force similar in magnitude to that generated in a cylinder of a conventional internal combustion engine. Electrodes **63** and **65** extend into the argon layer while each piston is in its BDC to TDC stroke so as to pick up some of the current flowing in that layer. It may take a cycle or two for the gases in the cylinders to become sufficiently excited for ignition to occur.

Once ignition does occur, the electrical operation of the engine continues as before, without the operation of the starter motor. Distributor **99** supplies three pulses per cycle (or more if the magnetic ignition system of **Fig.14** is used) to each cylinder; and distributors **135** and **137** continue to supply "on" and "off" gating pulses to the electronic switching units. The rpm of the engine is, as explained above, governed by the frequency of the current from oscillator **95** (or in the case of smaller horsepower units, by the DC voltage supplied to the cylinders from the Variac).

Because of the minute amount of fuel consumed in each cycle, it is calculated that a cylinder can run at 1200 rpm approximately 1000 hours, if not more, on a single charge of gas. Note that even at 1200 rpm, there will be intense heat occurring only 0.002% of the time. This means that input power need be applied only sporadically. This power can be supplied to a cylinder from the other cylinder of its pair by means of electronic switching units which, in the case of SCRs, are themselves triggered by low voltage (e.g. 3.5 V) current. Thus, since electrical power generated in one cylinder is used to excite the gases in the other cylinder of a pair, it is practical that the cylinders be paired as discussed above. Capacitors are, of course, used to store such energy for use during the proper portion of the cycle of each cylinder.

From the above, it should be appreciated that the engine of this invention has several advantages over presently proposed fusion reactors, such as smaller size, lower energy requirements, etc. But what are the bases of these advantages? For one, presently proposed fusion reactors use hydrogen and its isotopes as a fuel instead of inert gases. Presumably this is because hydrogen requires less excitement power. While this is true, the input power that is required in order to make hydrogen reactors operate makes the excitation power almost insignificant. For example, to keep a hydrogen reactor from short circuiting, the hydrogen gas has to be separated from the reactor walls while it is in the plasma state. This separation is accomplished by the maintenance of a near vacuum in the reactor and by the concentration of the gas in the centre of the reactor (typically a toroid) by a continuous, intense magnetic field. Accordingly, separation requires a large amount of input energy.

In the present invention, on the other hand, the greater excitation energy of the fuel is more than compensated for by the fact that the input energy for operation can be minimised by manipulation of the unique characteristics of the inert gases. First, helium is the inert gas used for fusion in the present invention. The helium is primarily isolated from the walls of the container by the layering of the other inert gases, which layering is caused by the different excitation potential (because of the different atomic weights) of the different inert gases, said excitation being caused by the action of the electrodes, anode and cathode in a magnetic field. This excitation causes the gases each to be excited in inverse proportion to their atomic numbers, the lighter gases being excited correspondingly more. Helium, therefore, forms the central core with the other four gases forming layers, in order, around the helium. The helium is secondarily isolated from the walls of the container by a modest vacuum (in comparison to the vacuum in hydrogen reactors) which is caused partially by the "choking" effect of the coils and partially by the enlargement of the combustion chamber as the piston moves from TDC to BDC. (Unexcited, the gases are at one atmosphere at TDC). Second, argon, the middle gas of the five, is a good electrical conductor and becomes an excellent conductor when (as explained below) it is polarised during the mixing process. By placing the electrodes such that they are in the argon layer, electrical energy can be tapped from one cylinder for use in the other. During a piston's movement from BDC to TDC, the gases are caused to circulate in the cylinder by the change in the polarity of the coils, which occurs at BDC.

During such circulation, the gases remain layered, causing the argon atoms to be relatively close to each other, thereby optimising the conductivity of the argon. This conductivity optimisation is further enhanced by a mild choking effect that is due to the magnetic fields. The circulation of the highly conductive argon results in a continuous cutting of the magnetic lines of force so that the current flows through the electrodes. This production of electricity is similar to the rotating copper wire cutting the magnetic lines of force in a conventional generator except that the rotating copper wire is replaced by the rotating, highly conductive argon. The amount of electricity that can be produced in this manner is a function of how many magnetic field lines are available to be cut. If one of the coils, or all three of the coils or two adjacent coils were energised, there would be only one field with electricity produced at each end. By energising the top and the bottom coil, two separate fields are produced, with electricity produced at four points.

A five coil system, if there were sufficient space, would produce three fields with the top, bottom and middle coils energised. Six points for electricity production would result. The number of coils that can be installed on a given cylinder is a function of space limitations. The recombination of gas atoms during the BDC to TDC phase causes the radiation of electrical energy which also provides a minor portion of the electricity that the electrode picks up. Additional non-grounded electrodes in each cylinder would result in more electricity being tapped off. It should be noted that during the BDC to TDC phase, the anode and the cathode are also in the argon layer and, like the electrodes, they pick up electricity, which charges the capacitors around the cylinder. Third, inert gases remain a mixture and do not combine because of the completeness of the electron shells. They are therefore well suited to a cycle whereby they are continually organised and reorganised. Fourth, as the helium atoms are consumed, the other gases have the capacity to absorb the charge of the consumed gas so that the total charge of the mixture remains the same.

The second basis of these advantages of the present engine over proposed fusion reactors concerns the fact that hydrogen reactors develop heat which generates steam to turn turbines in order to generate electrical power. This requires tremendous input energy on a continuous basis. The present invention operates on a closed cycle, utilising pistons and a crankshaft which does not require a continuous plasma but rather an infrequent, short duration (10^{-6} second) plasma that therefore requires much less input energy. In the present invention, a plasma lasting longer than 10^{-6} second is not necessary because sufficient pressure is generated in that time to turn the engine. A plasma of longer duration could damage the engine if the heat were sufficiently intense to be transmitted through the inert gas layers to the cylinder walls. A similar heat build-up in the engine can occur if the repetition rate is increased. Such an increase can be used to increase the horsepower per engine size but at the cost of adding a cooling system, using more expensive engine components, and increasing fuel consumption. Note that even though layers of inert gases insulate the cylinder walls, there might be some slight increase in the temperature of the gas layers after a number of cycles, i.e., after a number of ignitions.

Whereas hydrogen fusion reactors cannot directly produce power by driving a piston (because of the required vacuum), the present invention uses the layered inert gases to transmit the power from the plasma to each gas in turn until the power is applied to a piston, which can easily be translated into rotary motion. The layered gases also cushion the piston from the full force of the ignition. Moreover, the fields inside the cylinder undergoing expansion cause the gases to shrink, thereby taking up some of the pressure generated by the explosion and preventing rupturing of the cylinder walls.

Turning now to **Fig.17A** to **Fig.17D**, there is shown apparatus **201** for preparing the fuel mixture for engine **11**. For convenience apparatus **201** is called a mixer although it should be understood that the apparatus not only mixes the gases which form the fuel but also performs many other vital functions as well. The five constituent inert gases are introduced in precise, predetermined proportions. The mixer extracts, filters and neutralises the non-inert gases and other contaminants which may be found in the gas mixture. It also increases the potential capacity of gas atoms, discharges the krypton and xenon gases, polarises the argon gases, ionises the gases in a manner such that the ionisation is maintained until the gas has been utilised and otherwise prepares them for use as a fuel in engine **11**. In particular, the mixer makes the gases easier to excite during operation of the engine. Mixing does not mean an atomic or molecular combination or unification of gases because inert gases cannot chemically combine, in general, due to the completeness of the outer shell of electrons. During mixing, the various gases form a homogeneous mixture. The mixing of the five inert gases in apparatus **201** is somewhat analogous to preparing a five part liquid chemical mixture by titration. In such a mixture, the proportions of the different chemicals are accurately determined by visually observing the end point of each reaction during titration. In apparatus **201**, a visible, spectroscopic flash of light accompanies the desired end point of the introduction of each new gas as it reaches its proper, precalculated proportion. (Each gas has its own distinctive, characteristic, spectroscopic display). The ends points are theoretically calculated and are determined by pre-set voltages on each of a group of ionising heads in the apparatus, as described below.

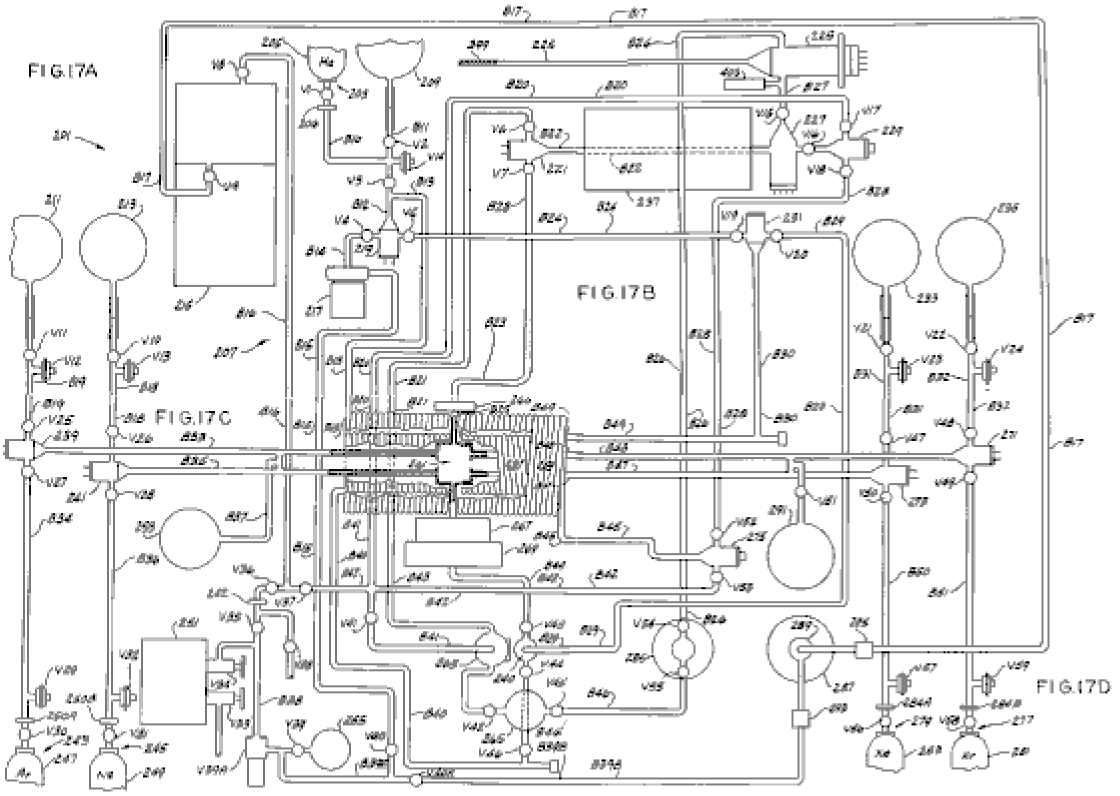

Mixer **201** includes (see **Fig.17A**) an intake port, indicated generally at **203**, which during operation is connected to a source **205** of helium gas, a gauge **206**, glass tubing **207** comprising a plurality of branches **B10-B25** for flow of the gases through the mixer, a plurality of valves **V1-V11** in the branches, which valves may be opened or closed as necessary, three gas reservoirs **209, 211** and **213** for storing small quantities of helium, argon and neon gas respectively, an ionising and filtering unit **215** for filtering undesired non-inert gases and contaminants out of the fuel mixture, for regulating the gas atom electron charge and to absorb the free flowing electrons, a gas flow circulation pump **217**, two ionising heads **219** and **221**, and three quality control and exhaust valves **V12-V14**. The mixer also comprises (see **Fig.17B**) a high frequency discharge tube **225**, a non-directed cathode ray tube **227**, two more ionising heads **229** and **231**, two additional gas reservoirs **233** and **235** for storing small quantities of xenon and krypton, a quadruple magnetic coil **237**, a group of valves **V15-V24**, valves **V23** and **V24** being quality control and exhaust valves, and a plurality of additional glass tubing branches **B26-B32**.

Turning to **Fig.17C**, mixer **201** also includes additional ionising heads **239, 240** and **241**, additional valves **V25-V46**, **V39A** and **V40A**, valves **V29** and **V32** being quality control and exhaust valves and valve **V39A** being a check valve, a vacuum and pressure gauge **242** between valves **V35** and **V36**, tubing branches **B34-B49** (branch **B39** consisting of two parts **B39A** and **B39B**), a pair of intake ports **243** and **245** which during operation are connected to sources **247** and **249** of argon and neon gas respectively, gauges **250A** and **250B**, a spark chamber **251**, a hydrogen and oxygen retention chamber **253** containing No. 650 steel dust in a silk filter, an ion gauge **255** (which can be an RG 75K type Ion Gauge from Glass Instruments, Inc. of Pasadena, Calif.) for removing excess inert gases from the mixture, inner and outer coils of glass tubing **257** and **259** surrounding a mixing chamber **261**, a focused x-ray tube **263** for subjecting the mixture flowing through it to 15-20 millirem alpha radiation and 120-125 millirem beta radiation, a directed cathode ray tube **265**, two twin parallel magnetic coils **266** and **267**, and a focusing magnetic coil **269**. It is important that coils **266** and **267** be immediately adjacent mixing chamber **261**. And (see **Fig.17D**) the mixer also comprises three more ionising heads **271**, **273** and **275**, two entry ports **277** and **279** which during operation are connected to sources **281** and **283** of krypton and xenon respectively, gauges **284A** and **284B**, a high frequency discharge tube **285**, a twin parallel magnetic coil **287** surrounding a polariser **289** for polarising the argon, said polarise containing fine steel particles which are polarised by coils **287** and which in turn polarise argon, a second hydrogen retention chamber **291**, a pair of tubing branches **B50** and **B51**, two filters **293** and **295** and a plurality of valves **V47-V59**, valves **V57** and **V59** being quality control and exhaust valves.

Inner and outer glass tubing coils **257** and **259** and mixing chamber **261** are shown in cross section in **Fig.18**. Intermediate glass coils **257** and **259** are two magnetic coils **297** and **299** having an inductance of approximately 130 mH. A yoke coil **301** is positioned in a semi-circle around mixing chamber **261.** Inside mixing chamber **261** are located a pair of screens **303** and **305**, insulators **307** and **309**, and a pair of spark gaps indicated generally at **311** and **313**. A high frequency amplitude modulated source provides 120 V AC, 60 Hz, 8.4 amp, 560 watt, 27,120 to 40,000 MHz plus or minus 160 KHz current via heavily insulated wires **315** and **317** to the chamber.

These wires are about twelve gauge, like those used as spark plug wires on internal combustion engines. Additionally 95 volt Direct Current is supplied via a smaller (e.g. sixteen to eighteen gauge) insulated wire **319**. As described below, the gases to be mixed and prepared flow through chamber **261** and are suitably treated therein by the action of the various fields present in the chamber.

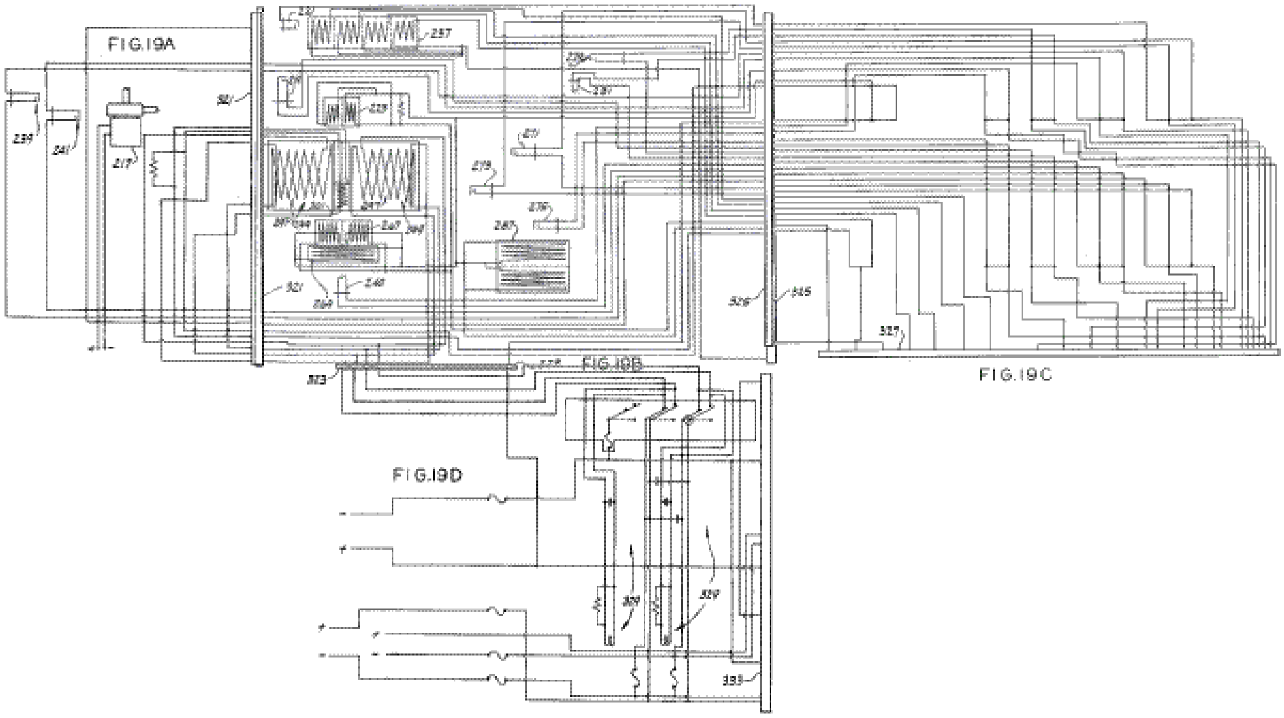

The magnetic coils, ionisation heads, and pump **217**, along with the required electrical interconnections, are schematically shown in **Fig.19A** to **Fig.19E**. More particularly, heads **239** and **241** are shown in **Fig.19A**, as is pump **217**. Each ionising head has two electrodes with a gap between them to cause ionisation of gases flowing through the head, the electrodes being connected to a source of electrical power. Pump **217** is directly connected to a source of power (either AC or DC as required by the particular pump being used). The connections between the circuitry on **Fig.19A** and that on **Fig.19B** are shown as a plug **321**, it being understood that this plug represents a suitable one-to-one connection between the lines of **Fig.19A** and those of **Fig.19B**.

The remaining ionising heads and all the magnetic coils are shown in **Fig.19B**. For clarity, the coils are shown in an unconventional form. Quadruple coil **237** (shown at the top of **Fig.19B**) has one side of each winding connected in common but the other sides are connected to different lines. Coil **223** consists of two windings in parallel. Coils **297** and **299**, the ones around the mixing chamber, are shown overlapping, it being understood that coil **297** is actually interior of coil **299**. Yoke coil **301**, as shown, extends half-way from the bottom to the top of coils **297** and **299**. Twin parallel magnetic coils **267** are connected in parallel with each other, both sides of focusing coil **269** being connected to one node of coils **267**. Likewise coils **287** are connected in parallel. The connections between the lines of **Fig.19B** and those of **Fig.19C** and **Fig.19D** are shown as plugs **323** and **325**, although other suitable one-to-one connections could certainly be made. **Fig.19C** shows the interconnecting lines between **Fig.19B** and **Fig.19E**. A plug **327** or other suitable one-to-one connections connects the lines of **Fig.19C** and **Fig.19E**.

A plurality of power sources, like the above-mentioned Variacs, of suitable voltages and currents as well as a plurality of relays **329**, and plugs **331** are shown on **Fig.19D** and **Fig.19E**. The connections between these two Figures is shown as a plug **333**. It should be appreciated that the Variacs can be adjusted by the operator as necessary to supply the desired voltages to the aforementioned coils and ionising heads. It should also be realised that the desired relays can be closed or opened as needed by connecting or disconnecting the two parts of the corresponding plug **331**. That is, by use of plugs **331**, the operator can control the energising of the ionising heads and magnetic coils as desired. Plugs **331** are also an aid in checking to ensure that each component is in operating condition just prior to its use. Of course, the manipulation of the power sources and the relays need not be performed manually; it could be automated.

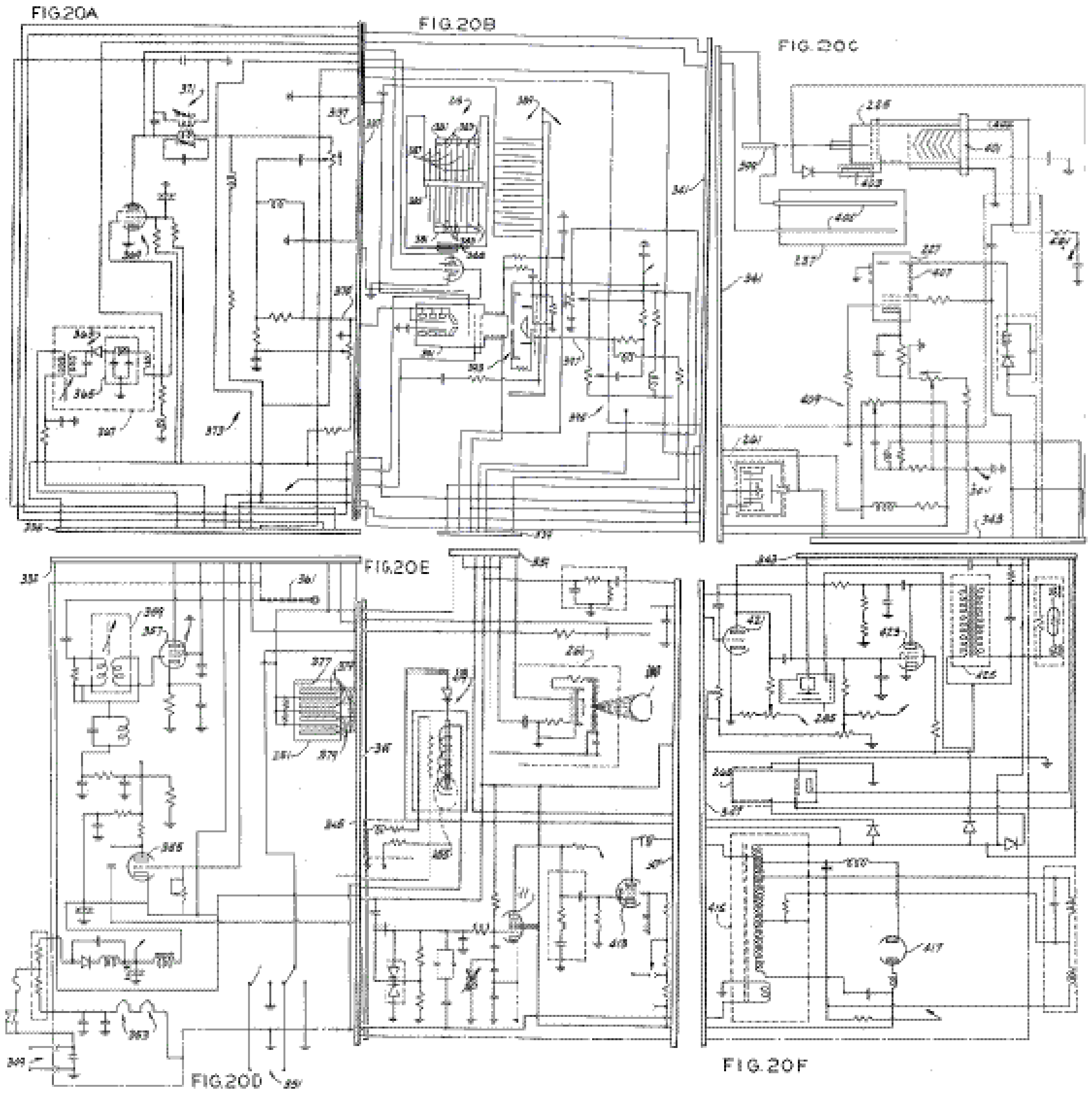

The remaining circuitry for the mixer is shown on **Fig.20A** to **Fig.20F**. For convenience, plugs **335**, **337**, **339, 341, 343, 345** and **347** are shown as connecting the circuitry shown in the various Figures, although other suitable one-to-one connections may be used. The chassis of the apparatus is shown on these Figures in phantom and is grounded. The power supply for the apparatus is shown in part on **Fig.20A** and **Fig.20D** and includes an input **349** (see **Fig.20D**) which is connected to 120 volt, 60 Hz power during operation and an input **351** which is connected to the aforementioned high frequency generator or some other suitable source of approximately 27,120 MHz current. The power supply includes a pair of tuners **353**, numerous RLC circuits, a triode **355**, a pentode **357** with a ZnS screen, a variable transformer **359**, an input control **361**, a second variable transformer **363** (see **Fig.20A**) which together with a filter **365** forms a 2.0 volts (peak-to-peak) power supply **367**, a pentode **369**, a variable transformer **371**, and a resistor network indicated generally at **373**. Exemplary voltages in the power supply during operation are as follows: The anode of triode **355** is at 145 V, the control grid at 135 V and the cathode at -25 V. The voltage at the top of the right-hand winding of transformer **359** is -5 V. The anode of pentode **357** is at 143 V, the top grid is grounded (as is the ZnS screen), the bottom grid is connected to transformer **359**, and the control electrode is at 143 V. The input to supply **367** is 143 volts AC while its output, as stated above, is 2 V (peak-to-peak). The anode of pentode **369** is at 60 V, the grids at -1.5 V, the control electrode at 130 V, and the cathode is substantially at ground. The output of resistor network **373**, labelled **375**, is at 45 V.

Also shown on **Fig.20D** is spark chamber **251**. Spark chamber **251** includes a small amount of thorium, indicated at **377**, and a plurality of parallel brass plates **379**. When the gases in the mixer reach the proper ionisation, the alpha particles emitted by the thorium shown up as flashes of light in the spark chamber.

Turning now to **Fig.20B**, ionising and filtering unit **215** includes a pair of conductive supports **381** for a plurality of conductors **383**, said supports and conductors being connected to a voltage source, an insulating support **385** for additional conductors **387**, and a ZnS screen **388** which emits light when impurities are removed from the gaseous fuel mixture. Unit **215** also includes a second set of interleaved conductors indicated generally at **389**, a cold-cathode tube **391**, and an x-ray tube indicated generally at **393**. Also shown on **Fig.20B** is an RLC network **395** which has an output on a line **397** which is at 35 V, this voltage being supplied to the x-ray tube.

High frequency discharge tube **255** (see **Fig.20C**) has a conductive electrode **399** at one end to which high frequency current is applied to excite the gases in the mixer, and an electrode/heater arrangement **401** at the other, a voltage of 45 V being applied to an input **402** of the tube. It is desirable that a small quantity of mercury, indicated at **403**, be included in tube **225** to promote discharge of the helium gas. Magnetic coils **237** have disposed therein a pair of generally parallel conductors **405** to which a high frequency signal is applied. When gas flows through coils **237** and between parallel conductors **405**, therefore, it is subjected to the combination of a DC magnetic field from the coil and high frequency waves from the conductors, which conductors act as transmitting antennas. The resulting high frequency magnetic field causes the atoms to become unstable, which allows the engine to change a given atom's quantum level with much less input power than would normally be required. The volume of each gas atom will also be smaller. Also shown on **Fig.20C** is non-directed cathode ray tube **227**. The grids of tube **227** are at 145 V, the control electrode is at ground, while the anode is at 35 V to 80 V (peak-to-peak). The purpose of non-directed cathode ray tube **227** is to add photons to the gas mixture. To generate these photons, tube **227** has a two layer ZnS coating indicated generally at **407**. Chamber **261**, described above, is also shown schematically on **Fig.20C**, along with an RLC network **409**.

The power supply for the mixer (see the lower halves of **Fig.20E** and **Fig.20F**) also includes two pentodes **411** and **413**, a transformer **415**, and a diode tube **417**. The control electrode of pentode **411** is at 5 V to 40 V (peak-to-peak), the grids are at 145 V, the anode is at 100 V, and the cathode is at 8 V to 30 V (peak-to-peak). The control electrode of pentode **413** is at 115 V, while its grids and cathode are at -33 V. The anode of tube **413** is connected to transformer **415**. Also shown on **Fig.20E** are a relay **419** associated with ion gauge **255**, and focused x-ray tube **263** associated with ionisation head **240**. The upper input to tube **263** is at 45 V to 80 V (peak-to-peak).

Turning to **Fig.20F**, there is shown tubes **265** and **285**. Directed cathode ray tube **265** is a pentode connected like tube **227**. High frequency discharge tube **285** includes a phosphor screen and is connected to a high frequency source. Also shown on **Fig.20F** is a triode **421** with its anode at 30 V, its cathode at ground, and its control grid at -60 V; a pentode **423** with its anode at 135 V to 1000 V peak to peak, its cathode at ground, its control electrode at 143 V, its grids at 20 V; and a transformer **425**. It should be understood that various arrangements of electrical components other than those described above could be designed to perform the same functions.

The operation of the mixer is best understood with reference to **Fig.17A** to **Fig.17D** and is as follows: Before and during operation, the mixer, and particularly chamber **261** is kept hermetically sealed and evacuated. To begin the mixing process, helium is admitted into the mixer via intake port **203**. Then a vacuum is again drawn, by a vacuum pump (not shown) connected to valve **V38**, to flush the chamber. This flushing is repeated several times to completely cleanse the tubing branches of the mixer. The mixer is now ready. The ionisation heads next to mixing chamber **261** are connected to a voltage corresponding to approximately 36% of the calculated total ionising voltage, DC current is allowed to flow through magnetic coils **297** and **299** around chamber **261**, and high frequency current is allowed to pass through the mixing chamber. Helium is then slowly admitted, via port **203**, into the mixer. From port **203**, the helium passes through ionisation head **219** into glass tubing coil **259**. This glass coil, being outside magnetic coils **297** and **299**, is in the diverging portion of a magnetic field. The helium slowly flowing through glass coil **259** is gently excited. From coil **259**, the helium flows through branch **B45** to ionisation head **275** and from there, via branch **B28**, to ionisation head **229** (see **Fig.17B**). From head **229**, the gas flows through non-directed cathode ray tube **227** to high-frequency discharger **225**. The high frequency discharger **225**, with heating element, discharges, separates or completely neutralises the charge of any radioactive and/or cosmic particles that are in the helium atom in addition to the protons, neutrons and electrons.

The gas exits discharger **225** via branch **B26** and passes to high-frequency discharger **285**. The high frequency discharger **285**, without heating element, disturbs the frequency of oscillation which binds the gas atoms together. This prepares the helium atoms so that the electrons can more easily be split from the nucleus during the excitation and ignition process in the engine. Discharger **285** includes a phosphorus screen or deposit (similar to the coating on a cathode ray tube) which makes discharges in the tube visible. From discharger **285**, the helium passes through directed cathode ray tube **265** and focused x-ray tube **263**. Directed cathode ray tube **265** produces cathode rays which oscillate back and forth longitudinally underneath and along the gas carrying tube. After that, the helium passes successively through branch **B21**, ionisation head **221**, branch **B23**, twin parallel magnetic coil **266**, and branch **B25** into mixing chamber **261**. Helium flows slowly into and through apparatus **201**. The helium atoms become ionised as a result of excitation by magnetic force, high frequency vibrations and charge acquired from the ionisation heads. When sufficient helium has entered the apparatus, the ionisation energy (which is approximately 36% of the total) is totally absorbed. A spectroscopic flash of light in the mixing chamber signals that the precise, proper quantity of helium has been allowed to enter. The entry of helium is then immediately halted by the closing of valve **V3**.

The next step in preparing the fuel is to add neon to the mixture. The potential on the relevant ionisation heads, particularly head **241** (see **Fig.17C**), is raised by the addition of approximately 26% which results in a total of approximately 62% of the total calculated potential and valve **V31** is opened, thereby allowing neon to slowly enter the mixer via port **245**. This gas passes through branch **B36**, ionisation head **241**, and branch **B35** directly into the mixing chamber. Since the previously admitted helium is fully charged, the neon absorbs all of the increased ionisation potential. As soon as the neon acquires the additional charge, a spectroscopic flash of light occurs and the operator closes valve **V31**.

In the same manner, the potential on the ionisation heads is increased by the addition of approximately 17% for a total of approximately 79% of the total calculated potential and then valve **V30** is opened to admit argon into the mixer via port **243**. This gas passes through branch **B34**, ionisation head **239**, and branch **B33** into mixing chamber **261**. Again, when the proper amount of argon has been admitted, it emits a spectroscopic flash of light and the operator closes valve **V30**. Next, the potential on the ionisation heads is increased by the addition of approximately 13% to result in a total of approximately 92% of the total calculated potential and valve **V58** (see **Fig.17D**) is opened to admit krypton into the system. The krypton gas passes through branch **B51**, ionisation head **271** and branch **B48** into chamber **261**. Upon the emission of a spectroscopic flash of light by the gas, the operator closes valve **V58**. Finally, the potential on the ionisation heads is increased by the addition of approximately 8% which brings the ionisation potential to the full 100% of the calculated ionisation voltage and valve **V56** is opened to admit xenon into the mixer via port **279**. This gas passes through branch **B50**, ionisation head **273** and branch **B47** to the mixing chamber. When the proper amount of gas has been admitted, a spectroscopic flash of light occurs signalling the operator to close valve **V56**. Note that there are two filter/absorber units, labelled **253** and **291**. Unit **253** is connected to the neon and argon inlet branches **B33** and **B35** while unit **291** is connected to the krypton and xenon inlet branches **B47** and **B48**. These two units absorb hydrogen residue and immobilise the water vapour created when the pump circulates the gases and generates vacuum states.

After all the gases are admitted in the desired proportions, all the valves are closed. (The mixture in the mixing chamber and in the adjacent tubing is at one atmosphere pressure at this time). Once this is done, the interval valves of the system are all opened (but the inlet and outlet valves remain closed) to allow the mixture to circulate throughout the tubing as follows: branch **B44**, magnetic coils **267** and **269**, ionisation head **240**, branch **B29**, ionisation head **231**, branch **B24**, ionisation head **219**, pump **217**, branches **B15** and **B39A**, ionisation gauge **255**, branches **B38** and **B42**, ionisation head **275**, branch **B28**, ionisation head **229**, non-directed cathode ray tube **227**, quadruple magnetic coil **272**, ionisation head **221**, branch **B23**, twin parallel magnetic coil **266**, branch **B25** and mixing chamber **261**. When this circuit is initially opened, the pressure of the mixture drops 40-50% because some of the tubing had previously been under vacuum. Pump **217** is then started to cause the gases to be slowly and evenly mixed.

Because of dead space in the tubing and the reaction time of the operator, it may occur that the proportions of the gases are not exactly those set forth above. This is remedied during the circulation step. As the gas flows through ionisation gauge **255**, excess gas is removed from the mixture so that the correct proportions are obtained. To do this the grid of gauge **255** is subjected to 100% ionisation energy and is heated to approximately 165 degrees F. This temperature of 165 degrees F is related to xenon's boiling point of -165 degrees F in magnitude but is opposite in sign. Xenon is the heaviest of the five inert gases in the mixture. As the gas mixture flows through ionisation gauge **255**, the gas atoms that are in excess of their prescribed percentages are burned out of the mixture and their charge is acquired by the remaining gas atoms from the grid of the ionisation gauge. Because the gases are under a partial vacuum, the ionisation gauge is able to adjust the gas percentages very precisely. (Note: The steps described in the last two paragraphs are repeated if the finished gases are rejected in the final quality control step described below).

The next step involves purifying the mixture so that only the five inert gases remain, absorbing any free electrons and regulating the electrical charge in the mixture. To do this, the circuit consisting of the following components is opened: Branch **B44**, magnetic coil **267**, magnetic coil **269**, ionisation head **240**, branch **B29**, ionisation head **231**, branch **B24**, ionisation head **219**, pump **217**, branches **B15** and **B39**, magnetic coil **287** (see **Fig.17D**) polariser **289**, branch **B17**, ionising and filtering unit **215**, branches **B16**, **B42**, and **B41**, x-ray tube **263**, branch **B21**, ionisation head **221**, branch **B23**, magnetic coil **266**, branch **B25**, and mixing chamber **261**. The gases should complete this circuit at least three times.

The last step required to prepare the mixture for bottling is polarisation of the argon. The circuit required to do this consists of the following components: mixing chamber **261**, branch **B44**, magnetic coil **267**, magnetic coil **269**, ionisation head **240**, cathode ray tube **265**, branch **B40**, tubing coil **257**, branches **B49** and **B30**, ionisation head **231**, branch **B24**, ionisation head **219**, pump **217**, branches **B15** and **B39**, twin parallel magnetic coil **287** (see

Fig.17D), polariser **289**, branch **B17**, ionising and filtering unit **215**, branches **B16**, **B42** and **B20**, ionisation head **229**, cathode ray tube **227**, magnetic coil **237**, ionisation head **221**, branch **B23** and magnetic coil **266**. This too is repeated at least three times. The key to the polarisation of argon is polariser **289** and twin parallel magnetic coil **287** that encircles it. Polariser **289** is a glass bottle which is filled with finely powdered soft iron which can be easily magnetised. The filled bottle is, in effect, the iron core of the coils. The iron particles align themselves with the magnetic lines of force, which lines radiate from the centre toward the north and south poles. The ionised gas mixture is forced through the magnetised iron powder by means of pump pressure and vacuum, thereby polarising the argon gas. Filters **293** and **295** are disposed as shown in order to filter metallic particles out of the gas.

The mixture is now double-checked by means of spark chamber **251** at atmospheric pressure since the fusion reaction in the engine is started at one atmosphere. Because the gases in mixing apparatus **201** are at a partial vacuum, sufficient gases must be pumped into spark chamber **251** to attain atmospheric pressure. To do this valves **V33**, **V36** and **V40A** are closed and circulating pump **217** pumps the gases in the mixing apparatus via branches **B15** and **B39A**, through check valve **V39A** into spark chamber **251** until the vacuum and pressure gauge **242** indicates that the gases within spark chamber **251** are at atmospheric pressure. Valve **V34** is then closed. The spark chamber is similar to a cloud chamber. Six or more high capacity brass capacitor plates are spaced 1/8" to 1/4" apart in the chamber. A small plastic container holds the thorium 232. One side of the chamber is equipped with a thick glass window through which sparks in the chamber may be observed. A potential is placed on the brass plates in the chamber and the current flowing between the plates is measured. If this current exactly corresponds to the ionisation current, the mixture is acceptable. A difference of greater than 5% is not acceptable. A lesser difference can be corrected by recirculating the gas in the mixer and particularly through ionisation gauge **255** as previously described in the circulation step. A second test is then given the gases that pass the first test. A calculated high frequency current is gradually imposed on the spark chamber capacitor plates. This excitation causes neutrons to be emitted from the thorium 232 which, if the mixture is satisfactory, can be easily seen as a thin thread of light in the chamber. If the mixture is not satisfactory, light discharges cannot be seen and the high frequency circuit will short out and turn off before the desired frequency is reached.

To bottle the mixture, valve **V33** is opened and valves **V36** and **V40** are closed. During bottling polariser **289**, twin parallel magnetic coil **287**, ionisation unit **215** and ion gauge **255** are electrically energised (all electrical circuits are previously de-energised) to improve the stability of the mixture. The prepared gases are withdrawn from the mixing apparatus via branches **B24** and **B16**, ionisation unit **215**, branch **B17**, filters **293** and **295**, polariser **289**, twin parallel magnetic coil **287**, branch **B39**, ion gauge **255**, check valve **V39A**, branch B38 and spark chamber 251. If desired, after bottling the mixer may be exhausted by opening valves **V12, V13, V14, V23, V24, V29, V32, V57** and **V59**. Of course, one can also automate the fuel preparation process to be continuous so that it would never be necessary to exhaust the gas.

In operation of mixing apparatus **201**, certain operational factors must be considered. For one, no electrical devices can be on without the pump being in operation because an electrical device that is on can damage adjacent gas that is not circulating. For another, it should be noted that directed cathode ray tube **265**, non-directed cathode ray tube **227** and focused x-ray tube **263** serve different functions at different points in the mixing process. In one mode, they provide hot cathode radiation, which can occur only in a vacuum. When gases are flowing through these devices, they provide a cold cathode discharge. For example, during argon polarisation and the circulation step, focused x-ray tube **263** is under vacuum and affects the gases flowing through ionisation head **240** by way of hot cathode radiation. During the introduction of the different gases into mixing apparatus **201** and during the recirculation step, the gases are flowing through focused x-ray tube **263**, which affects the gases by way of a cold cathode discharge.

It is preferred that each switchable electrical component in mixing apparatus **201** be wired into a separate circuit despite the fact that one of the poles of each could be commonly wired. In a common ground circuit if one device is turned on, all of the other units may also turn on because the gases in the device are conductive. In addition, if one unit on a common circuit were energised with high frequency current, the others would also be affected. In the same vein, the high frequency current cannot be used when the cathode ray tubes, the x-ray tubes or the dischargers are heated and under vacuum because the heater filaments will burn out.

Finally, the current source, the variable rectifiers and the electrical measuring instruments must be located more than ten feet from mixing apparatus **201** because the high frequency current is harmful to the rectifiers, causing them to burn out or short out.

It is hoped that a brief summary of the concepts used by the inventor in developing the above invention will be helpful to the reader, it being understood that this summary is in no way intended to limit the claims which follow or to affect their validity. The first concept is that of using an inert gas mixture at approximately one atmosphere at TDC (at ignition) as a fuel in a thermonuclear energy production process. The second concept is the layering of the various inert gases, which layering is designed to confine the input energy in the innermost layers during pre-excitement and ignition, to provide thermal insulation for the container walls during and after ignition, to transmit power resulting from the ignition through the layers in turn to the piston, to absorb the pressure generated during ignition to protect the cylinder walls, and to provide an orderly, predictable positioning of the argon layer during the BDC to TDC portion of the engine cycle. The third concept of this invention involves utilising electric current produced in one cylinder of a pair to perform functions in the other cylinder of that pair. This concept includes the sub-concepts of generating electric current by atomic recombination and of electric generation in place resulting from the rotation of layered inert gases within each cylinder because of the changed polarity of the encircling coils at BDC, from judicious placement of coils which produce magnetic field lines which are cut by a near perfect conductor (polarised argon), and from movement of said near perfect conductor through the magnetic field.

The fourth and fifth concepts of this invention are the transformation of rapid, intense, but short duration thermonuclear reactions into pressure that is transmitted from inert gas to inert gas until it creates linear kinetic energy at the piston, which energy is converted into rotary kinetic energy by a crankshaft, and the use of a shaft-driven generator to provide power to spaced field coils during the BDC to TDC portion of the cycle of each cylinder.

The sixth concept concerns adequate pre-excitement of the inert gas fuel and more particularly involves the sub-concepts of pre-exciting the fuel in the mixing process, of manipulation of the currents in the coils surrounding each cylinder, of discharging the capacitors surrounding each cylinder at predetermined times in the cycles, of causing a stream of electrical particles to flow between electrodes and a conductive discharge point on the piston, of emitting alpha, beta and gamma rays from an anode and a cathode containing low level radioactive material to the piston's discharge point, of accelerating the alpha, beta and gamma rays by the application of a high-voltage field, and of situating capacitor plates 90 degrees from the anode and cathode to slow and reflect neutrons generated during ignition. The seventh concept involves the provision of a minute, pellet-type fission ignition, the heat from which causes a minute fusion as the result of the ignition chamber shape and arrangement, as a result of the collision of the alpha, beta and gamma rays and the electrical particles at a focal point in conjunction with the discharge of the capacitors that surround the cylinder through the electrodes, and as a result of increasing the magnetic field in the direction of the movement of each piston.

Robert Britt’s Inert Gas Engine

US Patent 3,977,191 **31st August 1976** **Inventor: Robert G. Britt**

ATOMIC EXPANSION REFLEX OPTICS POWER SOURCE (AEROPS) ENGINE

ABSTRACT

An engine is provided which will greatly reduce atmospheric pollution and noise by providing a sealed system engine power source which has no exhaust nor intake ports. The engine includes a spherical hollow pressure chamber which is provided with a reflecting mirror surface. A noble gas mixture within the chamber is energised by electrodes and work is derived from the expansion of the gas mixture against a piston.

SUMMARY OF THE INVENTION

An atomic expansion reflex optics power source (AEROPS) engine, having a central crankshaft surrounded by a crankcase. The crankcase has a number of cylinders and a number of pistons located within the cylinders. The pistons are connected to the crankshaft by a number of connecting rods. As the crankshaft turns, the pistons move in a reciprocating motion within the cylinders. An assembly consisting of a number of hollow spherical pressure chambers, having a number of electrodes and hollow tubes, with air-cooling fins, is mounted on the top of each cylinder. The necessary gaskets are provided as needed to seal the complete engine assemblies from atmospheric pressure. A means is provided to charge the hollow spherical pressure chamber assembly and the engine crankcase with noble gas mixtures through a series of valves and tubes. A source of medium-voltage pulses is applied to two of the electrodes extending into each of the hollow spherical pressure chambers.

When a source of high-voltage pulses is applied from an electrical rotary distributor switch to other electrodes extending into each of the hollow spherical pressure chambers in a continuous firing order, electrical discharges take place periodically in the various hollow spherical pressure chambers. When the electrical discharges take place, high energy photons are released on many different electromagnetic frequencies. The photons strike the atoms of the various mixed gases, e.g., xenon, krypton, helium and mercury, at different electromagnetic frequencies to which each is selectively sensitive, and the atoms become excited. The first photons emitted are reflected back into the mass of excited atoms by a reflecting mirror surface on the inside wall of any particular hollow spherical pressure chamber, and this triggers more photons to be released by these atoms. They are reflected likewise and strike other atoms into excitation and photon energy release. The electrons orbiting around the protons of each excited atom in any hollow spherical pressure chamber increase in speed and expand outward from centre via centrifugal force causing the atoms to enlarge in size. Consequently, a pressure wave is developed, the gases expand and the pressure of the gas increases.

As the gases expand, the increased pressure is applied to the top of the pistons in the various cylinders fired selectively by the electrical distributor. The force periodically applied to the pistons is transmitted to the connecting rods which turn the crankshaft to produce rotary power. Throttle control valves and connecting tubes form a bypass between opposing hollow spherical pressure chambers of each engine section thereby providing a means of controlling engine speed and power. The means whereby the excited atoms are returned to normal minimum energy ground-state and minimum pressure level, is provided by disrupting the electrical discharge between the medium-voltage electrodes, by cooling the atoms as they pass through a heat transfer assembly, and by the increase in the volume area above the pistons at the bottom of their power stroke. The AEROPS engine as described above provides a sealed unit power source which has no atmospheric air intake nor exhaust emission. The AEROPS engine is therefore pollution free.

BRIEF OBJECTIVE OF THE INVENTION

This invention relates to the development of an atomic expansion reflex optics power source (AEROPS) engine, having the advantages of greater safety, economy and efficiency over those disclosed in the prior art. The principal object of this invention is to provide a new engine power technology which will greatly reduce atmospheric pollution and noise, by providing a sealed system engine power source which has no exhaust nor intake ports.

Engine power is provided by expanding the atoms of various noble gas mixtures. The pressure of the gases increases periodically to drive the pistons and crankshaft in the engine to produce safe rotary power. The objects and other advantages of this invention will become better understood to those skilled in the art when viewed in light of the accompanying drawings.

BRIEF DESCRIPTION OF THE DRAWINGS

Fig.1 is an elevational view of the hollow spherical pressure chamber assembly, including sources of gas mixtures and electrical supply:

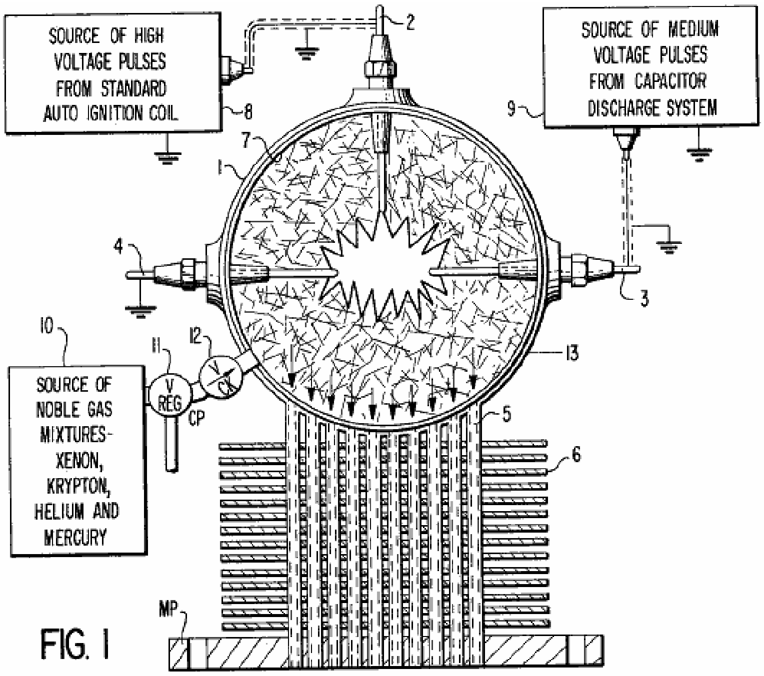

FIG. 1

Fig.2 is an elevational view of the primary engine power stroke:

FIG. 2

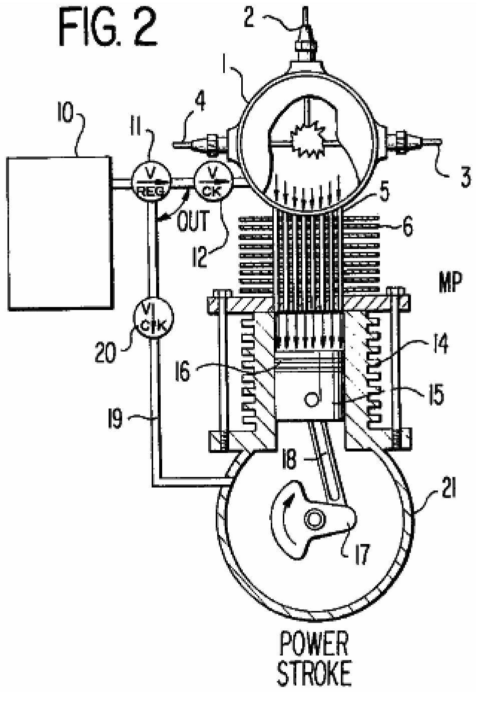

Fig.3 is an elevational view of the primary engine compression stroke:

FIG. 3

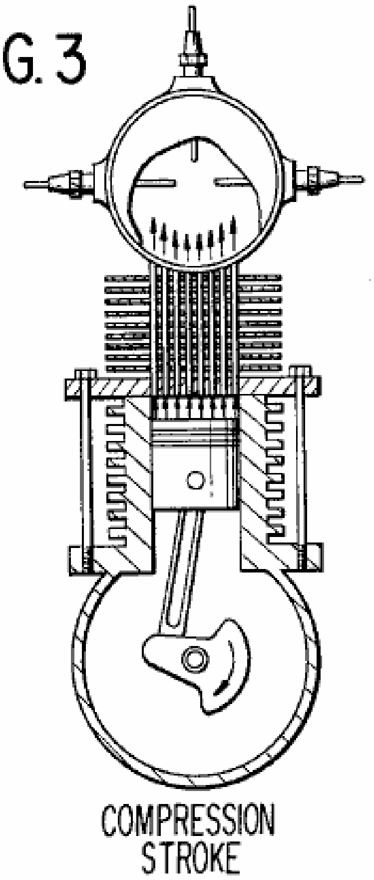

Fig.4 is a rear elevational view of a six cylinder AEROPS engine:

FIG. 4

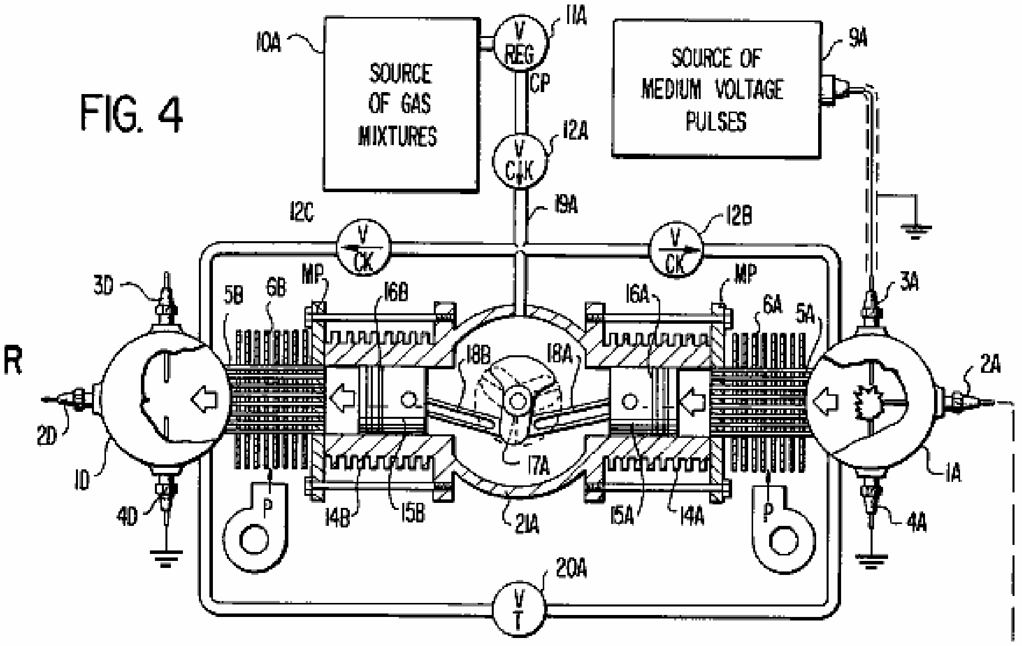

Fig.5 is a top view of the six cylinder AEROPS engine:

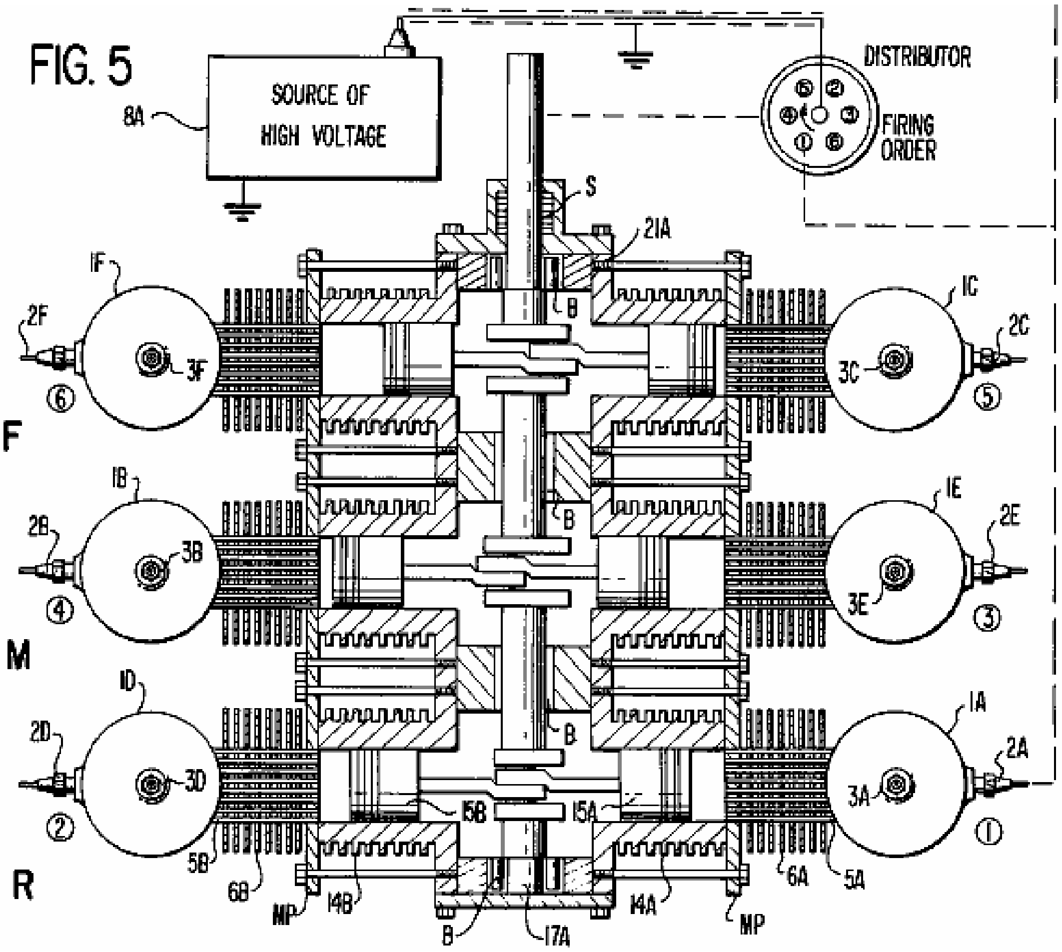

Fig.6 is an electrical schematic of the source of medium-voltage:

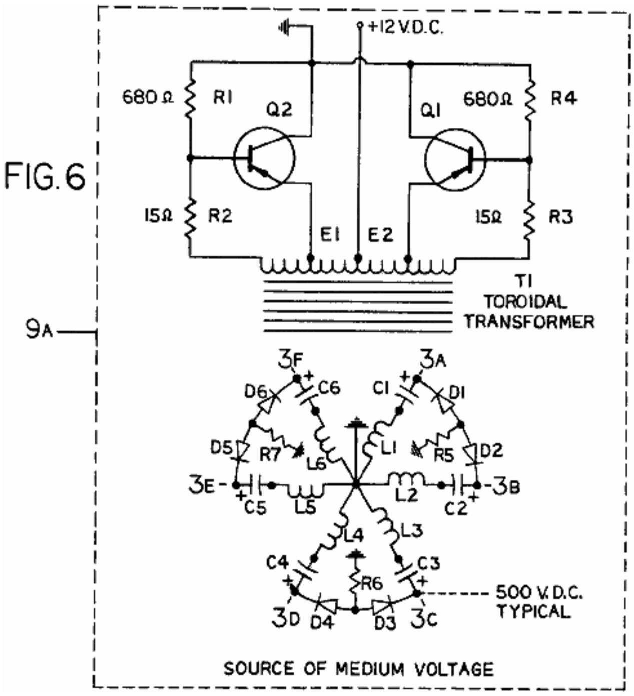

Fig.7 is an electrical schematic of the source of high-voltage:

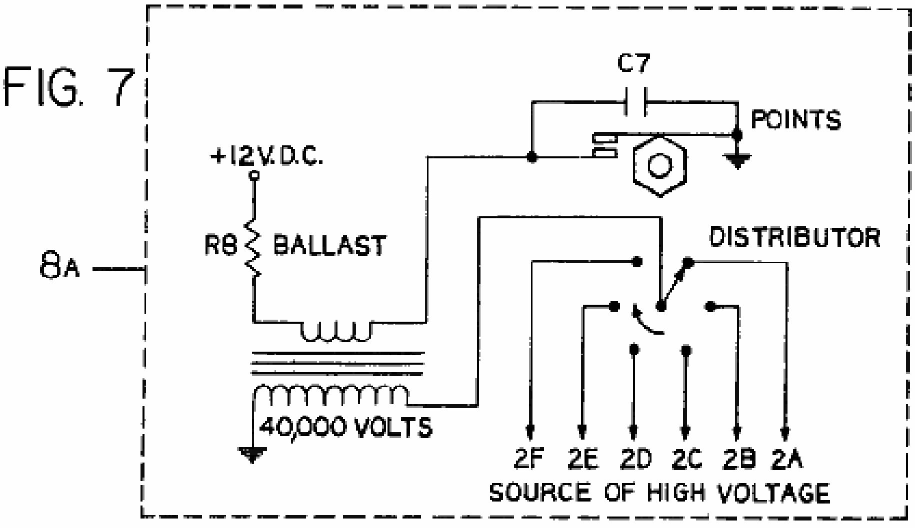
FIG. 7

DETAILED DESCRIPTION

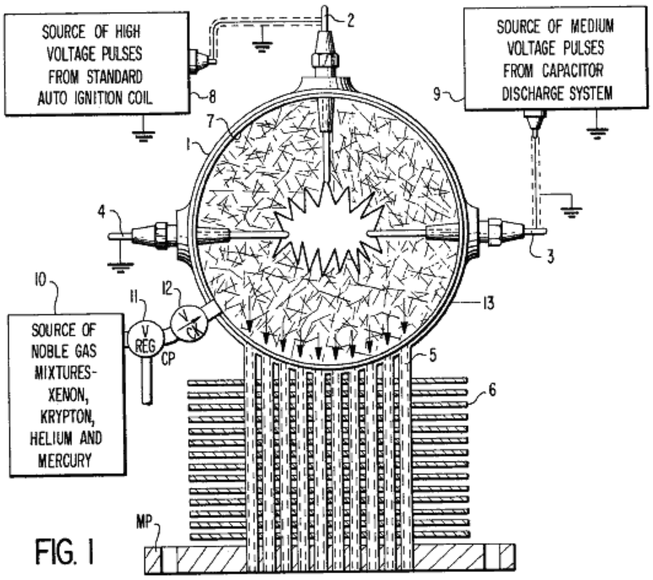
FIG. 1

Referring to **Fig.1** of the drawings, the AEROPS engine comprises a hollow spherical pressure chamber **1** having an insulated high-voltage electrode **2** mounted on the top, an insulated medium-voltage electrode **3** mounted on the right, and an insulated common ground electrode **4** mounted on the left, as shown in this particular view. Electrodes **2, 3** and **4** extend through the wall of the hollow spherical pressure chamber **1** and each electrode forms a pressure seal. A plurality of hollow tubes **5** arranged in a cylindrical pattern extend through the wall of the hollow spherical pressure chamber **1**, and each hollow tube is welded to the pressure chamber to form a pressure seal. The opposite ends of hollow tubes **5** extend through the mounting plate **MP** and are welded likewise to form a pressure seal. A plurality of heat transfer fins **6** are welded at intervals along the length of said hollow tubes **5**. A bright reflecting mirror surface **7** is provided on the inner wall of the hollow spherical pressure chamber **1**. A source of high-voltage **8** is periodically connected to the insulated high-voltage electrodes **2** and **4**. A source of medium-voltage **9** from a discharge capacitor is connected to the insulated medium-voltage electrodes **3** and **4**. A source of noble gas mixtures **10**, e.g., xenon, krypton, helium and mercury is applied under pressure into the hollow spherical pressure chamber **1** through pressure regulator valve **11** and check valve **12**.

FIG. 2

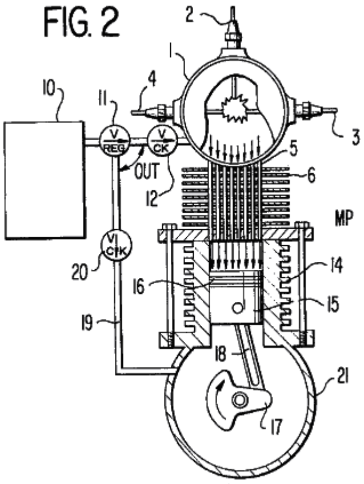

POWER STROKE

Referring now to **Fig.2** of the drawings, the complete assembly **13** shown in **Fig.1** is mounted on the top of the cylinder **14** via mounting plate **MP**. The necessary gaskets or other means are provided to seal the engine and prevent loss of gases into the atmosphere. The piston **15** located within cylinder **14** has several rings **16** which seal against the inner wall of the cylinder. The piston **15** is connected to the crankshaft **17** by connecting rod **18**. The source of noble gas mixtures **10** is applied under pressure into the crankcase **21** through pressure regulator valve **11**, check valve **12** and capillary tube **19**. The piston **15** is now balanced between equal gas pressures. Assuming that the engine is running and the piston **15** is just passing Top-Dead-Centre (TDC), a source of medium-voltage from a capacitor discharge system **9** (**Fig.6**, a single typical capacitor section) is applied to electrodes **3** and **4**. A source of high-voltage pulses from a standard ignition coil **8** (such as shown in **Fig.7**) is applied to electrodes **2** and **4** and the gases within the hollow spherical pressure chamber **1** are ionised and made electrically conductive. An electrical discharge takes place between electrodes **3** and **4** through the gases in the hollow spherical pressure chamber **1**.

The electrical discharge releases high energy photons on many different electromagnetic frequencies. The photons strike the atoms of the various gases, e.g., xenon, krypton, helium and mercury at different electromagnetic frequencies to which each atom is selectively sensitive and the atoms of each gas become excited. The first photons emitted are reflected back into the mass of excited atoms by the reflecting mirror surface **7**. This triggers more photons to be released by these atoms, and they are reflected likewise from the mirror surface 7 and strike other atoms into excitation and more photons are released as the chain reaction progresses. The electrons orbiting around the protons of each excited atom increase in speed and expand outward in a new orbital pattern due to an increase in centrifugal force. Consequently, a pressure wave is developed in the gases as the atoms expand and the overall pressure of the gases within the hollow spherical pressure chamber **1** increases. As the gases expand they pass through the hollow tubes **5** and apply pressure on the top of piston **15**. The pressure pushes the piston **15** and the force and motion of the piston is transmitted through the connecting rod **18** to the crankshaft **17** rotating it in a clockwise direction. At this point of operation, the power stroke is completed and the capacitor in the medium-voltage capacitor discharge system **9** is discharged. The excited atoms return to normal ground state and the gases return to normal pressure level. The capacitor in the medium-voltage capacitor discharge system **9** is recharged during the time period between (TDC) power strokes.

FIG. 3

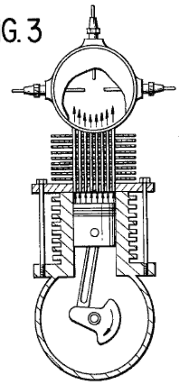

COMPRESSION STROKE

Referring now to **Fig.3** of the drawings, the compression stroke of the engine is shown. In this engine cycle the gases above the piston are forced back into the hollow spherical pressure chamber through the tubes of the heat transfer assembly. The gases are cooled as the heat is conducted into the fins of the heat transfer assembly and carried away by an air blast passing through the fins. An example is shown in **Fig.4**, the centrifugal air pump **P** providing an air blast upon like fins.

FIG. 4

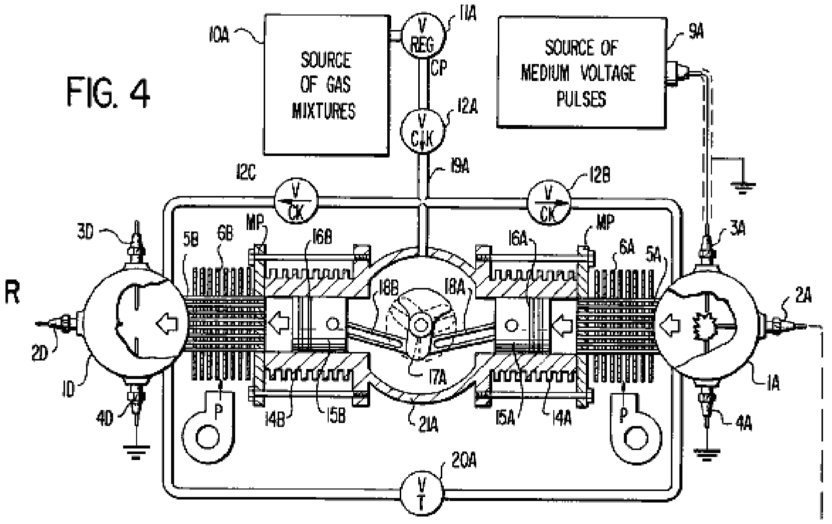

Some of the basic elements of the invention as set forth in **Fig.1**, **Fig.2**, and **Fig.3** are now shown in **Fig.4** and **Fig.5** which show complete details of a six-cylinder horizontally-opposed AEROPS engine.

Referring now to **Fig.4** and **Fig.5** of the drawings. **Fig.4** is a view of the rear section of the engine showing the crankshaft, centre axis and two of the horizontally-opposed cylinders. In as much as the rear **R**, middle **M** and front **F** sections of the engine possess identical features, only the rear **R** engine section will be elaborated upon in detail in order to prevent repetition and in the interest of simplification. The crankshaft **17A** consists of three cranks spaced 120 degrees apart in a 360 degree circle as shown. Both connecting rods **18A** and **18B** are connected to the same crank. Their opposite ends connect to pistons **15A** and **15B**, located in cylinders **14A** and **14B** respectively. Each piston has pressure sealing rings **16A** and **16B**. The hollow spherical pressure chamber assemblies consisting of **1A** and **1D** are mounted on cylinders **14A** and **14B** via mounting plates **MP**. The necessary gaskets are provided as needed to seal the complete engine assemblies from atmospheric pressure.

FIG. 5

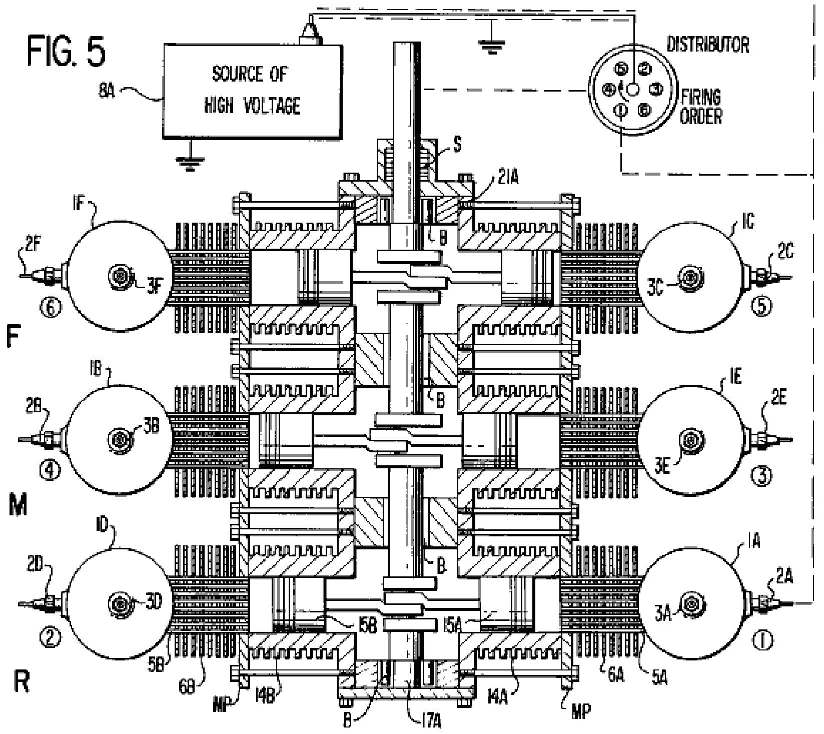

The source of gas mixtures **10A** is applied under pressure to pressure regulator valve **11A** and flows through check valve **12A**, through check valve **12B** to the hollow spherical pressure chamber **1A**, and through check valve

12C to the hollow spherical pressure chamber **1D**. The gas flow network consisting of capillary tubes below point **19A** represents the flow of gases to the rear section **R** of the engine. The middle section **M** and the front section **F** both have gas flow networks identical to that consisting of capillary tubes below point **19A**, while the gas flow network above is common to all engine sections. Throttle valve **20A** and the connecting tubing form a variable bypass between hollow spherical pressure chambers **1A** and **1D** to control engine speed and power. Engine sections **R**, **M** and **F** each have this bypass throttle network. The three throttle valves have their control shafts ganged together. A source of medium-voltage pulses **9A** is connected to medium-voltage electrodes **3A** and **3D**. In one particular embodiment the medium-voltage is 500 volts. A source of high-voltage pulses **8A** is connected to electrode **2A** through the distributor as shown. Electrode **4A** is connected to common ground. Centrifugal air pumps **P** force air through heat transfer fins **6A** and **6B** to cool the gases flowing in the tubes **5A** and **5B**.

Fig.5 is a top view of the AEROPS engine showing the six cylinders and crankshaft arrangement consisting of the rear **R**, middle **M** and front **F** sections. The crankshaft **17A** is mounted on bearings **B**, and a multiple shaft seal **S** is provided as well as the necessary seals at other points to prevent loss of gases into the atmosphere. The hollow spherical pressure chambers **1A, 1B, 1C, 1D, 1E** and **1F** are shown in detail with high-voltage electrodes **2A, 2B, 2C, 2D, 2E, 2F** and medium-voltage electrodes **3A, 3B, 3C, 3E** and **3F**. The common ground electrodes **4A, 4B, 4C, 4D, 4E, 4F** are not shown in **Fig.5** but are typical of the common ground electrodes **4A** and **4D** shown in **Fig.4**. It should be noted that the cranks on crankshaft **17A** are so arranged to provide directly opposing cylinders rather than a conventional staggered cylinder design.

FIG.6

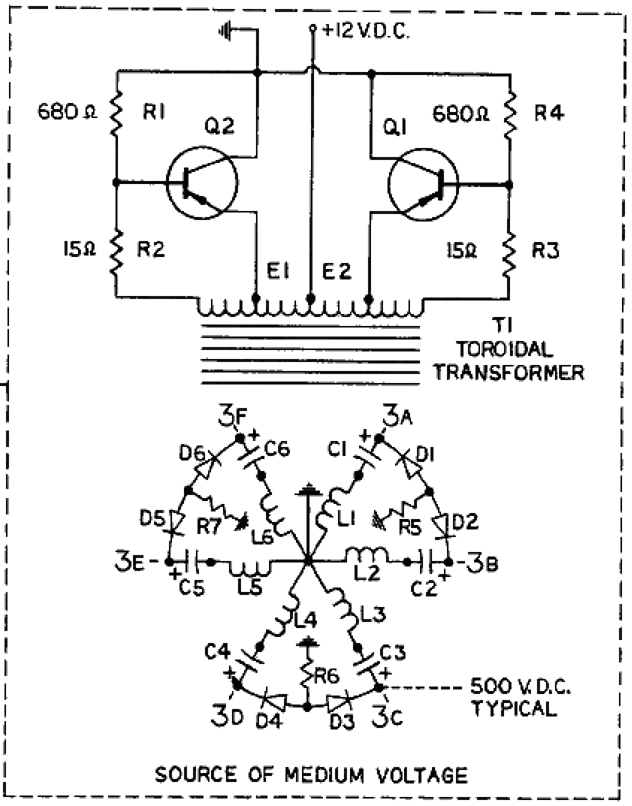

Fig.6 is an electrical schematic of the source of medium-voltage **9A**. The complete operation of the converter is explained as follows: The battery voltage 12 VDC is applied to transformer **T1**, which causes currents to pass through resistors **R1, R2, R3** and **R4**. Since it is not possible for these two paths to be exactly equal in resistance, one-half of the primary winding of **T1** will have a somewhat higher current flow. Assuming that the current through the upper half of the primary winding is slightly higher than the current through the lower half, the voltages developed in the two feedback windings (the ends connected to **R3** and **R2**) tend to turn transistor **Q2** on and transistor **Q1** off. The increased conduction of **Q2** causes additional current to flow through the lower half of the transformer primary winding. The increase in current induces voltages in the feedback windings which further drives **Q2** into conduction and **Q1** into cut-off, simultaneously transferring energy to the secondary of **T1**. When the current through the lower half of the primary winding of **T1** reaches a point where it can no longer increase due to the resistance of the primary circuit and saturation of the transformer core, the signal applied to the transistor from the feedback winding drops to zero, thereby turning **Q2** off. The current in this portion of the primary winding drops immediately, causing a collapse of the field about the windings of **T1**. This collapse in field flux, cutting across all of the windings in the transformer, develops voltages in the transformer windings that are opposite in polarity to the voltages developed by the original field. This new voltage now drives **Q2** into cut-off

and drives **Q1** into conduction. The collapsing field simultaneously delivers power to the secondary windings **L1, L2, L3, L4, L5** and **L6**. The output voltage of each winding is connected through resistors **R5, R6** and **R7** and diode rectifiers **D1, D2, D3, D4, D5** and **D6**, respectively, whereby capacitors **C1, C2, C3, C4, C5** and **C6** are charged with a medium-voltage potential of the polarity shown. The output voltage is made available at points **3A, 3B, 3C, 3D, 3E** and **3F** which are connected to the respective medium-voltage electrodes on the engine shown in **Fig.4** and **Fig.5**.

FIG. 7

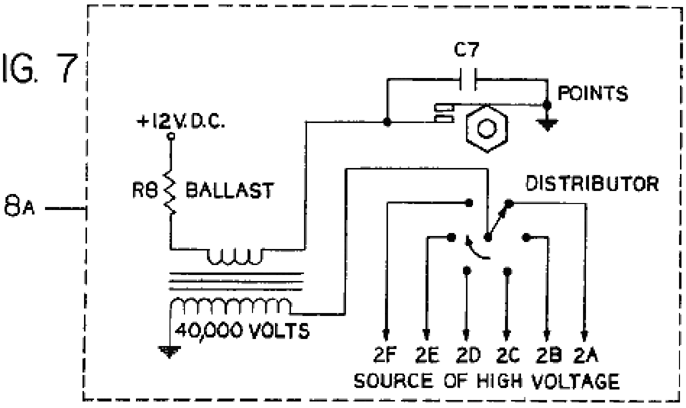

Referring now to **Fig.7** of the drawings, a conventional "Kettering" ignition system provides a source of high-voltage pulses **8A** of approximately 40,000 volts to a distributor, which provides selective voltage output at **2A, 2B, 2C, 2D, 2E** and **2F**, which are connected to the respective high-voltage electrodes on the engine shown in **Fig.4** and **Fig.5**. The distributor is driven by the engine crankshaft **17A** (**Fig.5**) at a one to one mechanical gear ratio.

Referring again to **Fig.4** and **Fig.5** of the drawings, the operation of the engine is as follows: Assuming that a source of noble gas mixtures, e.g., xenon, krypton, helium and mercury is applied under pressure to the hollow spherical pressure chambers **1A, 1B, 1C, 1D, 1E** and **1F** and internally to the crankcase **21A** through pressure regulator valve **11A** and check valves **12A**, **12B** and **12C**; and the source of medium-voltage **9A** is applied to electrodes **3A, 3B, 3C, 3D, 3E** and **3F**; and a source of high-voltage pulse **8A** is applied to electrode **2A** through the timing distributor, the gas mixtures in the hollow spherical pressure chamber **1A** is ionised and an electrical discharge occurs immediately between electrodes **3A** and **4A**.

High-energy photons are released on many different electromagnetic frequencies. The photons strike the atoms of the various gases, e.g., xenon, krypton, helium and mercury at different electromagnetic frequencies to which each is particularly sensitive and the atoms of each gas become excited. The first photons emitted are reflected back into the mass of excited atoms by the internal reflecting mirror surface on the inside wall of the hollow spherical pressure chamber **1A**. This triggers more photons to be released by these atoms and they are reflected likewise from the mirror surface and strike other atoms into excitation and more photons are released as the chain reaction progresses. The electrons orbiting around the protons of each excited atom in the hollow spherical pressure chamber **1A** increase in speed and expand outward in a new orbital pattern due to an increase in centrifugal force. Consequently, a pressure wave is developed in the gases as the atoms expand and the overall pressure of the gases within the hollow spherical pressure chamber **1A** increases.

As the gases expand they pass through the hollow tubes **5A** applying pressure on the top of piston **15A**. The pressure applied to piston **15A** is transmitted through connecting rod **18A** to the crankshaft **17A** rotating it in a clockwise direction. As the crankshaft **17A** rotates it pushes piston **15B** via connecting rod **18B** in the direction of a compression stroke, forcing the gases on the top of the piston through hollow tubes **5B** into the hollow spherical pressure chamber **1D**. As the gases pass through the hollow tubes **5A** and **5B** the heat contained in the gases is conducted into the heat transfer fins **6A** and **6B**, where it is dissipated by a blast of air passing through said fins from the centrifugal air pumps **P**. At this point of operation the power stroke of piston **15A** is completed and the capacitor in the medium-voltage capacitor discharge system **9A** is discharged. The excited atoms return to normal ground state and the gases return to normal pressure level. The capacitor in the medium-voltage capacitor discharge system **9A** is recharged during the time period between the power strokes of piston **15A**.

The above power stroke cycle occurs exactly the same in the remaining cylinders as the high-voltage firing order progresses in respect to the position of the distributor switch. In as much as the AEROPS engine delivers six power strokes per single crankshaft revolution, the crankshaft drives the distributor rotor at a one to one shaft ratio. The complete high-voltage firing order is 1, 4, 5, 2, 3, 6, whereas, the high-voltage is applied to electrodes **2A, 2B, 2C, 2D, 2E** and **2F** respectively. A means of controlling engine speed and power is provided by a plurality of throttle control valves and connecting tubes which form a bypass between opposing hollow spherical pressure chambers of each engine section.

The AEROPS engine as described above provides a sealed unit power source which has no atmospheric air intake nor exhaust emission and is therefore pollution free.

Floyd Sweet

Recently, some additional information on Floyd Sweet's device, has been released publicly by an associate of Floyd's who goes just by his first name of "Maurice" and who, having reached the age of seventy has decided that it is time to release this additional information.

Maurice says: After observing the comments made over the past year regarding the Sweet-VTA Energy Device, I decided to "come out of the woodwork" and explain what basically is NOT known regarding Floyd Sweet ("Sparky") and his energy device.

Keep in mind that I am 70 years old, quite computer illiterate, my background Being mainly Political Science (Graduate Degree); consulting with State Legislatures; Mental Health (former Executive Director of five clinics); and, acquiring Venture Capital for High Tech. Equipment (such as medical equipment) and various Projects. My story is very unusual and strange, but, nevertheless TRUE! At my age I have no one to impress with what I am about to tell you. My only interest is to correct error where possible and to make certain information known!

Remember, that I have never had any education in electronics. This was a real advantage for me because I did not have any electrical principles which I had to UN-LEARN in anything that Floyd told us. Unfortunately, one of my brothers who trained for 35 years in electronics was "blown away" when Floyd told him that "he needed to reverse the concepts which he was taught about the action of an electron and treat it like it was positive". Therefore, for Sparky's modelling, electrons were flowing and acting in the opposite direction to what was normally modelled by a trained physicist. See what I mean? The Dean of the School of Science of MIT that verified that Sparky had an MSEE degree and came third in his class of more than two hundred.

Hopefully sincere researchers will be able to obtain some useful information in what I attempt to explain in the future that will help them to duplicate what Floyd had. In this respect, one day after Floyd had repeatedly asked me: "What is this device Maurice?" and I repeatedly gave him the wrong answer, saying that it was an energy device, I finally realised that what was important to him was that he considered the device to be a TIME MACHINE - his emphasis was NOT on the energy. He told me never to forget that the most important thing was that the device was a "Time Machine".

Maurice draws attention to the fact that Floyd Sweet graduated as an M.S.E.E. from the Massachusetts Institute of Technology in 1969 and his thesis "Dynamics of Magnetic Domains" is considered by the M.I.T. scientific community to be unparalleled in magnetic concepts. He received the coveted Dean's Award for his scientific research and his academic level in Electrical Engineering achievement ranks third in the history of the M.I.T. School of Science. He has an extraordinary talent in the area of Engineering Mathematics not to mention his concept of electromagnetic and related electrical phenomena and understanding of abstract intangibles needed to predict the unforeseen.

Maurice says: In about 1988 John, who my two brothers and I were involved with in the High Tech field realised that my brother, who was a Doctor (Doctor brother), was interested in negative energy devices for the treatment of the physical body (similar to Rife/Tesla Frequency Machines). John had formerly been employed at NASA with Floyd Sweet. John lived in California close to Floyd (Sherman Oaks).

My doctor brother and I were introduced to Floyd by John and we waited patiently for the time when we could see the VTA device. We saw it on the table at his house during various visits but it was not operating. Floyd was like many inventors who played games with you. Each time we would drive 13 hours to see him thinking we could see the device operating, but he would have some excuse for not turning it on, or he would just ignore the purpose of our visit.

On one visit, I looked over at Floyd and he was “showing off” his Barium Ferrite bar magnet. The magnet was approximately 1/2” thick, 7” long and 3” wide. He had a small piece of metal that was standing on the top of the magnet at a 45 degree angle. As I recall, he claimed that the 45 degree angle was needed in the treatment of the magnet so that it could capture Scalar waves. The magnets were mainly functioning as a “gate” for the Scalar waves. Additionally, if you placed a piece of thin “flexible” (ribbon type) metal flat on the top of the magnet, the middle of the “ribbon metal” would be “sucked down” flat at the middle of the magnet and both ends of the “ribbon metal” would be bowed-up at each end of the magnet. Also, I came to understand from another inventor that we introduced later on to Floyd that the “figure eight” design (flux flow?) on the top of the magnet played an important part in the functioning of the magnet - I don’t really know about the concept and can’t relay any additional information.

On another visit, Floyd demonstrated the flowing flux of the magnet. He had a TV monitor and he would place the magnet by the screen and you could see all the beautiful colours of the flux as it moved across the monitor screen. My electronics brother told me that Floyd had told him that he had a way of treating the magnet by calibrating the Scalar wave angle coming in using the TV monitor. A side note is that Floyd delighted in telling people, when they asked how he treated his magnets, they should get the magnets real hot first. This apparently "screwed up" the magnetism and he enjoyed doing this for some weird reason!

Finally, after 12 trips across the California Desert, Floyd agreed to show us the Device in operation. In his defence, Floyd did claim that on some earlier planned demonstrations that his magnets had been "pulverized" by artificial earthquakes coming up through Mexico. He designed some type of buffer in the Device that eliminated the problem, but, it was an on-going problem for quite a period of time. This reminds me now that I must digress because I need to tell you about the Government (or who?) involvement with us.

When we first started to visit Floyd, our phones were all "tapped" - I do not know by whom. My electronics brother worked full-time with the Air National Guard and his specialty was electronic Security, Crypto, etc. tied in with SAC bases in our area and the surrounding States. Additionally, he had set-up the "clean room" for the President of the United States when he visited our State. I mention this because even my electronics brother was doubtful in the beginning that we were all being monitored. On one occasion, my doctor brother had his complete prior telephone conversation played back to him when he answered the phone (twenty minutes later) - I think it was probably some type of "screw-up" by whoever was monitoring our phones. My biggest complaint was the consistent early morning 3am call and then a "hang-up" when you answered - for what reason I don't know other than for harassment purposes.

I give you the above information so that you can understand the seriousness of what we were involved with.

Floyd's Energy Device was mainly three things:

(1) It was a healing device - negative electricity - negative time. In theory, you could re-set the template in your DNA with this energy source and therefore cleanse the body of all impurities that your ancestors had acquired over time. Additionally, you could kill current disease (virus/bacteria) in the body by using the right frequencies, and this did not disturb any other body cells. This is why Floyd needed my doctor brother to help him arrive at the proper medical protocol for using his technology. Additionally, if you note in the Payroll Expenses attachment of this e-mail, a one-line item of expenditure is for AIDS-related materials in which Floyd and my doctor brother had a real interest. My doctor brother had an agreement with Floyd to build three medical interferometers which would all have a noble gas plasma inside them. I actually witnessed one of these devices in operation. At the end of the (approximately 20 inch long) tube-like structure you could feel a pulsing being emitted at the end of the tube on to whichever part of the body you wanted treated. My doctor brother had ordered two Interferometers from Floyd which were about 4 feet long.

(2) The VTA energy device is probably the world's worst weapon. Floyd claimed that like Nicola Tesla, you could cause "artificial earthquakes" - besides destroying buildings. As I understood from people in the intelligence world, which we de-briefed after we saw the device operate, three countries have what is called the "Tesla Cannon"; Russia, America and I never found out who the third country was. As mentioned earlier, this energy source is what disabled Floyd's VTA equipment over many months until he got his "buffer" built into his device. Further, this is why the Federal Government had such an interest in what we were doing with Floyd during the time we spent with him.

(3) The device was an Energy source for the home (could change negative energy to positive energy). It was also an energy source for the car and many other purposes. The cost of building one of these energy devices was only about US $200.00 - incredible!

Description of the VTA device:

On the day that we finally got to see the device operating, my doctor brother and I had finally convinced my electronics brother to accompany us to Sherman Oaks, California to see the demonstration. My doctor brother and I had made ALL the preliminary trips to see Floyd minus our electronics brother because he was literally a "doubting Thomas", being heavily involved in the electronics field and full of Maxwell's Theories of electronics, etc. Yes, you could say that he was a traditional electronics person. But, for this reason, we needed my electronics brother to be our DEBUNKER in case the device was not what it was portrayed to be. We had one other witness "Gary", an associate of mine who was to bring in

the venture capital funding if the device proved to be as good as claimed.

The day when we witnessed the VTA device operating is a day which I shall never forget. To actually see a device working, which cost only $200 dollars to make and which could create all the clean energy you would ever need, was “awesome”. I know I have been “altered” ever since knowing that such a device existed. Now for a brief description of the Device:

These are not exact measurements but only approximations. The device was on what I believe to be "Plexi glass" (acrylic). Nothing was hidden. You could see everything, top and bottom through the plastic. The Plexi glass structure was approximately 18” square. We were allowed to pick-up the device and carry it around Floyd’s living room so you could see that there were no other electrical connections to it.

On top of the Plexi glass case there were three toroidal coils wound with thin windings of varnished copper wire. There were two barium ferrite bar magnets (approx. 7”x 3”x 1/2”). Present was a volt meter which displayed 120v when the device was turned on. Also, there was an ampere meter which measured the electrical currents flowing when Floyd switched different things on-and-off during the demonstration. The items used for load demonstration included the burner part of the stove, a hair dryer, a fan, and five one-hundred watt globe lights. The fascinating thing to me about the light demo was that the lights had a glow like the overhead lights in your kitchen - a very soft, COOL appearance. Not the look of a traditional bright light bulb such as you have in your lamp on a traditional night stand.

I forgot to mention that the device was started by attaching a 9-volt battery which, I understand, started the magnetic flux in motion. Floyd would then connect the “pigtail” on the device and it would become just one circular energy unit.

As Floyd put more load on the device, the ambient temperature around the device (coils) would start to get lower. Additionally, depending on how much load you added, the device would start to lose some of its weight and you then had levitation beginning to take place. I should note at this point that on one meeting with Floyd, his wife Rose, used some expletives when telling how one day, Floyd kept adding more-and-more load to the device and he almost “brought down” the Apartment Complex he lived in at Sherman Oaks. He turned off the equipment, went out on his patio and pretended that it was a California Earthquake! His neighbours never did know what he had in his apartment. In this respect, I never did find out what the big piece of equipment was in his bedroom. It literally stretched from the ceiling to the floor. It was so heavy that the floor was bowed-in and sunken and that “big sucker” had a growling noise when it was on - I never did find out what it was. It was big like some kind of transformer.

***The Rest of The Story*:**

You are probably wondering what the article on Ron Brandt is about. It’s a long story, but after I moved Ron and his laboratory all the way from the mouth of Zion's National Park to “someplace” Oregon to hide him out - he was using “Tachyon Beams" with his medical equipment and after only a couple of minutes the “Black Helicopters” would show up - soooo at my doctor brother’s request I moved Ron to Oregon. At the time I thought Ron was a “real flake” because when I helped him forward his mail from a small town in Southern Utah, he asked me how to spell the word “electric” so he could put in the full address of “Brandt Electric”. Further, Ron said he was only here on this Earth until 2012 - It was now 1987-88 - and then he had to leave to go to another planet! I now wanted to shoot my doctor brother who got me into this whole moving-Ron thing! My doctor brother told me that Ron had to move fast because Ron had told him that an earthquake was coming in the next few days - Right!

Well, guess what happened a few days later? The largest earthquake in many years in that particular location took place and it even wiped out the hot springs at the Resorts along the Virgin River which runs through Zion's National Park and through the small town of Virgin where Ron lived. I since found out that Ron had invented earthquake equipment along with Philo T. Farnsworth’s (Inventor of Television) grandson and six months ahead, they had actually predicted the previous great earthquake in California and their prediction was off by only six minutes! The Government is insisting that they want the equipment, so that is one of the reasons for everyone “hiding out”.

Now, why am I giving you all this preliminary information regarding Ron Brandt? Well it seems that Ron has a Magnet Motor which weighs only 75 pounds and which can generate power equivalent to that of a 300 horsepower internal combustion engine. Also, the motor can be a retro-fit in any existing car without the need to design a whole new car. This is the connection I will explain later regarding Ron who could not even spell “electric” and Floyd who was placed 3rd in all the inventions to ever come out of MIT - All I can say is “WOW”!

EVENTS SURROUNDING FLOYD'S DEATH:

I will now leave it up to you to decide whether or not Floyd died of natural causes or was "taken out" by some person, group, or some Government.

In the summer of 1994, my doctor brother suddenly "passed out" at one of our Venture Capital meetings and was rushed to the hospital. After an MRI of his head, it was discovered that he had a brain tumour and it was of the worst kind (very fast growing). This seemed impossible as my doctor brother had always monitored his body daily as he did an occasional experiment on himself with certain medicines. By 11th November 1994, my doctor brother had died. He told us prior to death that "they" (whoever "they" were) had succeeded in placing the fastest growing cancer tumour into his brain - How? - I have no idea! I never did find out. What is important to the free-energy field was that my doctor brother was in daily contact with Floyd and his Associates regarding the energy devices. I was not that important and basically only accompanied my doctor brother to meetings and kind of "got lost in the woodwork". Intellectually, I really was not a threat to anyone. I was only there at meetings to help acquire venture capital.

On the very day that my doctor brother died, my electronics brother and I were at the home of John, (Floyd's Associate from NASA) who for some strange reason had followed my brothers and I to our home city where we lived, bought a home and took up residence there. We did not complain as he was our go-between with Floyd. But the move still seemed strange to me. The reason my electronics brother and I were with John is that John had arranged a conference call with Floyd and us, to see if there was a possibility for Floyd to make some type of energy device which could power the magnet motor that Ron Brandt had. My brothers and I had all the contractual rights to Ron's Magnet Motor which could be used in any car. I thought to myself that now I can really find out how "real" Ron (who could not even spell "electric") was when I matched him up with Floyd from MIT. I could not believe what I heard as Floyd and Ron conversed at the highest electronic levels - "who the 'hell' is Ron?" I thought. Floyd agreed that he would have no problem doing the prototype for Ron's Magnet Motor to power the car.

Floyd mainly worked with my electronics brother on this project as Floyd needed old vacuum tubes which my electronics brother had to acquire for the device and my electronics brother was a real "bench" person which Floyd seemed to favour over academic Electrical Engineers.

During the Spring of 1995, while Floyd was working on our energy device for the car, John (from NASA) and Floyd were elated that there was supposed to be an announcement from the White House regarding Floyd's VTA Energy Device. It seems that Floyd was a past friend of Senator John Glen (the former NASA astronaut) and he had given Glen one of the energy devices. Unfortunately, Glen gave the device to the Department of Energy, who, according to Floyd, passed the device on to General Motors. Floyd was furious and as I understood Floyd was then going to sue GM for two hundred million dollars. As far as I know Floyd never got the device back. I will always remember the extreme disappointment on the faces of Floyd and John when they realised that the trip to Washington DC for the announcement, was not going to take place.

In July 1995, Floyd let us know that the Energy Device was finished and we were to take possession of it. Floyd now lived in Desert Palms, California and that is where we would pick it up. After much thought, we decided we better not board a plane with the device as we were not sure of any magnetic effects on the instruments of the plane in having it transported - it was new technology which still had many questions to be answered. Instead, we decided to drive our car to Desert Palms and bring the device back ourselves.

Floyd called us the day before we were to leave and asked us if he could keep the device for a couple of extra days. He said he had "someone" coming (I thought he said China) and wanted to show them the device. We said ok, we would plan to pick it up when he was done.

A day later, at about 7:00 am Pacific time, there was a frantic call from Floyd's wife Violet (Floyd's wife Rose had died and he had re-married) to my electronics brother's house. My electronics brother was not at home and my sister-in-law, his wife, took the call from Violet. Violet was very traumatised when she told my sister-in-law that Floyd was dead. There was a lot of shouting going on in the background. The people who were there claimed they were from the FBI and that Floyd's equipment belonged to them. Rose was extremely confused with the death of Floyd and people she had never seen before taking all the equipment out of her house to waiting vans. She asked my sister-in-law what to do and my sister-in-law had NO idea as she was not aware of what my brothers and I had going on!

Violet also said that about 5:00 pm the previous night, two men whom she had never seen before, showed up to see Floyd. Floyd was with them for a period of time and then they left. At about 8:00 pm, Floyd was having a cup of coffee when he fell out of the chair on to the floor. She called for an ambulance and when they arrived they would not let her ride with them. Violet was 75 years old and didn't drive. About twenty minutes later the ambulance called back to Violet and told her they didn't think Floyd was going to "make it"!! As I understand it, Floyd's body was cremated. How soon afterwards, I don't know. The end result for my brothers and I is that ALL of our energy equipment that Floyd made for us was taken - By Whom??

Who were the two men who met with Floyd a few hours before his death? Was anything put in Floyd's coffee by these men? Violet said she had never seen them before and they seemed strange!
Why could Violet not go with her husband in the ambulance? I have seen it happen many times when family is allowed, especially where age is concerned!

How did the FBI (if that is who they were) know that Floyd was dead and show up in the very early morning (about 6:00 am) just hours after he died late at night?

YOU BE THE JUDGE - ALL I KNOW IS THAT ALL OF OUR ENERGY DEVICES (MEDICAL AND CAR-MAGNET MOTOR) ARE GONE!!! WHERE ARE THEY AND WHO ARE THE ONES RESPONSIBLE FOR TAKING THEM ??

Here are some of the known facts about Floyd's energy device:

The invention is a unified-field device and so combines both electromagnetic and gravitational effects in the same unit. For a tiny power input of just 0.31 milliwatt, the unit produces over 500 watts of output power, which is an energy gain of more than 1,500,000. The prototype, has no moving parts, is about 6" x 6" x 4" in size and taps an inexhaustible source of energy. To date, up to one kilowatt of power has been produced in actual tests which required only tiny input power to make the device operate.

Our normal day-to-day energy is "positive energy". The energy produced by Floyd's device is "negative energy" but in spite of this, it powers ordinary equipment, producing light and heat as normal. A device like this has to have a major impact on the world as we know it, because:

1. **It can be easily built. The components are quite ordinary and the cost of the materials in the demonstration prototype was only a few hundred US dollars and it was constructed in just a few hours, using simple tools and equipment.**

2. **The test results are so impressive that there can be no question of errors of measurement when the energy gain is of the order of 1,500,000 times.**

3. **It demonstrates with laboratory precision that the 'law' of Conservation of Energy does not appear to apply during the operation of this device, which is something which most scientists have difficulty in accepting.**

The device has very high performance. When a 1-milliwatt 60Hz sine wave is fed into it, the out put powers 500 watts of standard mains-voltage light bulbs, producing both heat and light. The device has a positive-feedback loop so it's gain is depends directly on the output load and the input power remains unchanged. So to increase the output power, all that is necessary is to connect extra light bulbs or equipment across the output.

When a motor was connected in addition to the light bulbs, the motor ran perfectly well under load and the light bulbs remained as bright as ever. Because it is a "cold electricity" device, the wires feeding the load can be very much smaller in diameter than would be normal for the load and these wires run cold at all times. When the power hits the resistance of the filaments of the light bulbs, it converts into conventional "hot electricity" and the filaments perform in exactly the same way as they do when powered by "hot electricity".

In 1988, Floyd produced a paper which he considered to be very important. The following text is an attempt to reproduce the content his highly mathematical style of presentation. If you are not into complicated mathematical presentations, then just move on past and don't worry about the following technical material, or alternatively, take a quick skim through it and don't bother with the maths. Floyd says:

What is thought of as "empty space" actually contains almost everything in the universe. It is home to all kinds of invisible energy fields and is seething with all kinds of very real forces.

Every kind of matter produces an energy field and these energy fields interact with each other in many complicated ways, producing all sorts of additional effects. These energy fields are the "stuff" of space, or as it is sometimes described, "the virtual vacuum". Space is packed full of all sorts of things but because it does not contain air, we tend to think that there is nothing at all in it. Most people think that "vacuum" means "without air" but when scientists speak of space as "the vacuum" they do not mean that at all, and they use the word "vacuum" to describe to describe (loosely speaking) the place which is between the stars and planets of the universe, and Floyd refers to that vast place as "the vacuum", so please don't think that it has anything to do with air, as it definitely doesn't.

Floyd says: We all think that we know what light is, but the reality is that a particle of light is nothing more than a large interference in the electromagnetic field. Unless it interacts with matter or with another field, any electromagnetic field with not be changed in any way by the vacuum. Electromagnetic fields are a fundamental part of the structure of the vacuum itself. The whole universe is permeated by a constant magnetic field. That field is made up of countless numbers of North and South pole magnets in a completely random scatter.

Einstein has pointed out that $E = mC^2$ which is one way of saying that energy and matter are interchangeable (or are two different faces of the same thing). The energy everywhere in the universe is so great that new particles of matter pop into existence and drop back into their energy form many trillions of times per second. Actually, they exist for such a very short time that calling them "particles" is not really appropriate, so perhaps "virtual particles" might be a better description.

However, if we generate a moving magnetic field, it alters the random nature of this energy in the tiny part of the vacuum where we happen to be, and the vacuum energy becomes much less random and allows a very large amount of vacuum energy to be drawn into our equipment and do what we think of as "useful work" - producing heat and light, powering motors and vehicles, etc. This was proved in laboratory experiments during the week of 19th June 1988 and it is the underlying operating principle of my "Phase-Conjugated Vacuum Triode" device.

The energy produced by this device is "negative energy" which is the reverse of the energy with which we are familiar. The spark caused by a short-circuit in a negative energy system is excessively bright and cold and it produces a barely audible hiss with no explosive force. Melting of wires does not occur and this type of negative current passes through the human body with only the feeling of a chill.

Wires which carry a lot of negative energy remain cool at all times and so tiny wires can feed equipment with hundreds of watts of power. This has been demonstrated in the laboratory and the source of energy is unlimited as it is the virtual vacuum of space itself.

The Nature of Space:

Space itself is the ability to accommodate energy. Consider for a moment, the following illustration:

> **A signal (energy) is transmitted from point "A" to point "B" which are separated by a finite distance. Consider three periods of time:**
>
> **1. The signal is launched from point A.**
> **2. The signal resides in the space between point A and point B.**
> **3. The signal arrives at point B.**
>
> **If 3. occurs simultaneously with 1. we say that the signal has travelled at infinite velocity. If that were the case, then the signal never resided in the intervening space and therefore there must be no space between point A and point B and so both points A and B must be at the same location. For real space to exist between the two points, it is necessary that a signal moving between them has to get "lost" to both points, that is, out of touch with both points for a finite period of time.**

Now, we know that for real space to exist between two points, a signal passing between them has to move at a finite speed between them and if it can't do that, then there can't be any space between them. If space can't accommodate a signal passing between two points, then it has no function and no reality. We are left then with the only real space, the home of the real and virtual vacuum - space which supports a finite, non-zero signal velocity.

A similar argument applies to the impedance of space. A medium can only accommodate positive energy if the medium resists it to a reasonable degree. Neither an infinitely strong spring nor an infinitely weak spring can absorb energy by being compressed. Neither an infinitely large mass nor an infinitely small mass can absorb or accommodate energy imparted by a collision and the same holds true for space.

Energy cannot enter a space of zero impedance any more than a force can bear on a mass of zero magnitude. Similarly, energy could not enter space which has an infinite impedance. It follows therefore, that real space must have:

1. **Finite propagation velocity and**
2. **Finite impedance.**

Another way of looking at this is instead of considering the actual speed of propagation of a signal through space, to consider the length of time "t" which it takes the signal to pass through that part of space. We can think of a section of space as being, say, 1 nanosecond wide if it takes a signal 1 nanosecond to traverse it. That is, the energy or signal entering that part of space, leaves it again 1 nanosecond later. Signal propagation speed in the space in which we live is at the speed of light.

General Description of Energy Transfer:

Consider energy flowing straight and level down a transmission line. The energy does not "know" the width of the channel through which it is passing. If the energy flow reaches a point where the conductivity of the channel lowers but the size and shape of the channel remain the same, then not as much energy can flow and some gets reflected back along the channel. The energy current will not "know" if (a) the conductivity has changed or (b) the geometry has changed. The energy current can change direction very easily and so as far as it is concerned, the change caused by (a) is equivalent to the change caused by (b).

The channel through which the energy flows has width and height and the width divided by the height is called the "aspect ratio" of the channel. Energy current has an aspect ratio and if that aspect ratio is forced to change, then some of the flowing energy will reflect so as to keep the *overall* aspect ratio unchanged.

The aspect ratio of energy current is much like the aspect ratio of space itself. While the aspect ratio of space itself can change, it's fundamental velocity of "C" the speed of light in space can't really change. That speed is just our way of visualising time delay when energy resides in a region of space. Uniform space has only two parameters:

(1) Aspect ratio and
(2) Time delay

Aspect ratio defines the shape (but not the magnitude) of any energy flow which enters a given region of space. Velocity or length define the time during which that energy can be accommodated in a region of space.

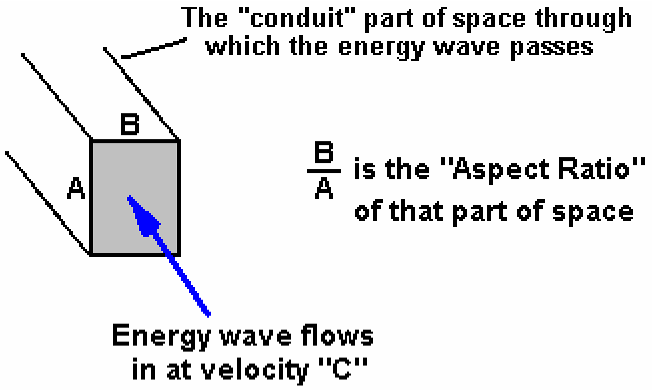

Does an energy flow travel unimpeded through an interface, or does a large part of it get reflected? Space has quiet zones through which energy glides virtually unreflected. It also has noisy zones where the energy current becomes incoherent, bounces around and splits apart. These noisy zones in space either have either rapidly changing geometry or rapidly changing impedance.

Electromagnetic Energy:

The rate of flow of energy through a surface can be calculated using "E" the Electric field, and "H" the Magnetic field intensity. The energy flow through space is E x H per unit area (of it's "conduit's" cross-sectional area) and the energy density is E x H / C where C is the speed of light in space.

If there happen to be two signals of exactly the same strength, passing through each other in opposite directions in such a way that their "H" fields cancel out, then if each has a strength of E/2 and H/2, the

energy density will be E x H / 2C and it will have the appearance of a steady E-field. In the same way, if the E fields cancel out, the result will appear to be a steady "H" field.

Modern physics is based on the faulty assumption that electromagnetics contains two kinds of energy: electric and magnetic. This leads to the Baroque view of physical reality. Under that view, energy seems to be associated with the square of the field intensity, rather than a more reasonable view that it is directly to the field intensity. It is worth remembering that neither Einstein nor most modern physicists were, or are, familiar with the concept of "energy current" described here. However, their work still survives by ignoring the energy current concept, scalar electromagnetics, the works of Tom Bearden, kaluza-Klein and others who dispute Heaviside's interpretations of Maxwell's equations.

The Fallacy of Displacement Current:

Conventional electromagnetic theory proposes that when an electric current flows down a wire into a capacitor, it spreads out across the plate, producing an electric charge on the plate which in turn, leads to an electric field between the plates of the capacitor. The valuable concept of continuity is then retained by postulating a displacement current "after Maxwell". This current is a manipulation of the electric field "E" between the plates of the capacitor, the field having the characteristics of electric current, thus completing the flow of electricity in the circuit. This approach allows Kirchoff's laws and other valuable concepts to be retained even though superficially, it appears that at the capacitor there is a break in the continuous flow of electric current.

The flaw in this model appears when we notice that we notice that the current entered the capacitor at only one point on the capacitor plate. We are then left with the major difficulty of explaining how the electric charge flowing down the wire suddenly distributes itself uniformly across the entire capacitor plate at a velocity in excess of the speed of light. This paradoxical situation is created by a flaw in the basic model. Work in high-speed logic carried out by Ivor Catt has shown that the model of lumped capacitance is faulty and displacement current is an artefact of the faulty model. Since any capacitor behaves in a similar way to a transmission line, it is no more necessary to postulate a displacement current for the capacitor than it is necessary to do so for a transmission line. The removal of "displacement current" from electromagnetic theory has been based on arguments which are independent of the classic dispute over whether the electric current causes the electromagnetic field or vice versa.

The Motional E-Field:

Of all of the known fields; electric, magnetic, gravitational and motional E-field, the only ones incapable of being shielded against are the induced motional E-field and the gravitational field. The nature of the motionally-induced electric field is quite unique. In order to understand it more fully, we must start by discarding a few misleading ideas. When magnetic flux is moved perpendicularly across a conductor, an electromotive force ("e.m.f.") is electromagnetically induced "within" the conductor. "Within" is a phrase which comes from the common idea of comparing the flow of electric current within a wire to the flow of water in a pipe. This is a most misleading comparison. The true phenomenon taking place has little been thought of as involving the production of a spatially- distributed electric field. We can see that the model's origins are likely to have arising from the operation called "flux cutting" which is a most misleading term. A better term "time-varying flux modulation" does not imply any separation of lines of flux. Truly, lines of flux always form closed loops and are expressed mathematically as line integrals.

It is a fallacy to use the term "cutting" which implies time-varying separation which does not in fact ever occur. A motionally-induced E-field is actually created within the space occupied by the moving magnetic flux described above. The field is there whether or not a conductor is present in the space. In terms of a definition, we can say that when magnetic flux of vector intensity B-bar is moved across a region of space with vector velocity V-bar, an electromagnetically induced electric field vector B x V appears in the space at right angles to both B-bar and V-bar. Therefore:

E = B-bar x V-bar . . . . (1)

It is this field which is related to gravity and which is virtually unshieldable. This field may be called the Motional E-field. According to Tom Bearden, "It seems that the charged particles in the atom act like tiny magnets and their motion in the space surrounding the atom would create this motional E-field". The fields created by both the positive and negative charges would cancel to some degree, but due to the high orbital velocity of the negative electron relative to that of the positive proton, the induced field of the electron would dominate the resulting field. The field produced as a result of these charges would vary in proportion to the inverse square of the distance as gravity does. The field produced by the translational motion of the charges would vary inversely as the cube of distance. This concept totally unites the

electromagnetic and gravitational field theories and accounts for the strong and weak force within the atom.

Field Super-Position and the Vacuum Triode:

Electromagnetic induction with no measurable magnetic field is not new. It is well known that in the space surrounding a properly wound toroidal coil, there is no magnetic field. This is due to the superposition of the fields. However, when alternating current is surging through a transformer, an electric field surrounds it. When we apply the principle of super-position to the vacuum triode, it becomes more obvious how the device is operating.

The principle of super-position states that "in order to calculate the resultant intensity of superimposed fields, each field must be dealt with individually as though the others were not present" The resultant is produced by the vector addition of each of the fields considered on its own. Consider for a moment, the construction of the triode which includes two bi-filar coils located within the fields of two conditioned magnets. When the current in one half of the conductors in the coils (that is, just one strand of the twin windings in each coil) is increasing, both the current and the magnetic field follow the right-hand rule. The resulting motional E-field would be vertical to both and directed inwards. At the same time, the current in the other strand of each winding is decreasing and both the current and the magnetic field also follow the right-hand rule. The resulting motional E-field is again vertical to both, and directed inwards. So, the resultant combined field intensity is double the intensity produced by either one of the conductors considered on its own. Expressed mathematically, this is:

$$E = (B \times V) + (-B \times -V) \quad \text{or}$$

$$E = 2\,(B \times V) \;.\; (2)$$

Where: E is the electric field intensity
B is the magnetic field intensity and
V is the electron drift velocity

(B x V), the first term in the equation, represents the flow of the magnetic field when the electrons are moving in one direction, while (-B x -V), the second term in the equation, defines the flow of the magnetic field when the electrons are moving in the other direction. This indicates that field intensity is directly proportional to the square of the current required by the load placed on the device. This is due to it's proportional relationship with the virtual value of the magnetic field which theory states is proportional to the current. Electrometer readings were always close to parabolic, indicating that the source was of infinite capacity. It was further determined through experiment, that the magnetic field does not change with temperature. Also, there is no reason yet identified, which would lead one to believe that electron drift velocity changes. It has been found remarkable that the vacuum triode runs approximately 20^{O}F below ambient.

Induced Electromotive Force - Positive Energy:

When an e.m.f. ("electromotive force") is applied to a closed metallic circuit, current flows. The e.m.f. along a closed path "C" in space is defined as the work per unit charge (that is, W / Q) done by the electromagnetic fields on a small test charge moved along path C. Since work is the line integral of Force ("F"), the work per unit charge is the line integral of force per unit charge (in Newtons per Coulomb) we have:

$$\text{e.m.f.} = \int_{c} F / Q \ \times \ dtdl \ \ \text{volts} \;.\; (3)$$

The scalar product "(F/Q) x dtdl" is the product of (F/Q) x Cosθ x dl where θ denotes the angle between the vectors F/Q and dl.

The electric force per unit charge is the electric field intensity ("E") in volts per metre. The magnetic force per unit charge is V x B where "V" denotes the velocity of the test charge in metres per second and "B" denotes the magnetic flux density in webers per metre squared. In terms of the smaller angle θ between V and B, the cross product of V and B is a vector having the magnitude VBSinθ. The direction of vector V x B is at right angles to the plane which contains vectors V and B in accordance with the right-hand rule (that is, V x B is in the direction of the thumb while the fingers curl through the angle θ from V towards B). Since the total force per unit charge is E + VB, the total e.m.f. in terms of the fields is:

$$\text{e.m.f.} = \int_C (E + V \times B)\, dtdl \;\ldots\ldots\ldots\ldots\ldots\ldots\; (4)$$

It appears from equation (4) that the e.m.f. depends on the forward velocity with which the test charge moves along the path C. This, however, is not the case. If V and dl in equation (4) have the same direction, then their associated scalar product is zero. So, only the component of V which is not aligned with dl (that is, with θ = 0), can contribute to the e.m.f. This component has value only if the differential path length dl has a sideways motion. So, V in equation (4), represents the sideways motion of dl, if there is any. The fields E and B in equation (4) could well be represented as functions of time as well as functions of the space co-ordinates. In addition, the velocity V of each differential path length dl, may vary with time. However, equation (4) correctly expresses the e.m.f. or voltage drop along path C as a function of time. That component of the e.m.f. consisting of the line integral V x B is the motional E-field since it has value only when path C is ,moving through a magnetic field, traversing lines of magnetic flux. For stationary paths, there is no motional E-field and the voltage drop is simply the integral of the electric field "E". Devices which separate charges, generate e.m.f.s and a familiar example of this is a battery which utilises chemical forces to separate charge. Other examples include the heating of a thermocouple, exposure of a photovoltaic cell to incident light or the rubbing together of different material to produce electrostatic charge separation. Electric fields are also produced by time-varying magnetic fields. This principle is already exploited extensively in the production of electrical power by the utility companies.

The line integral of electric field intensity "E" around any closed path "C" equals -dφ/dt where φ represents the magnetic flux over any surface "S" having the closed path "C" as it's contour. The positive side of the surface S and the direction of the line integral around contour C, are related by the right-hand rule (the curled fingers are oriented so as to point around the loop in the direction of integration and the extended thumb points out the positive side of the surface S). The magnetic flux φ is the surface integral of magnetic flux density "B" as shown here:

$$\varphi = \iint_s B \times ds \quad \text{webers} \;\ldots\ldots\ldots\ldots\ldots\; (5)$$

In Equation (5), the vector differential surface "ds" has an area of ds and in direction, it is perpendicular to the plane of ds, projecting out of the positive side of that surface. The partial time derivative of φ is defined as:

$$\frac{\partial \varphi}{\partial t} = \iint_s \frac{\partial b}{\partial t} \times ds \quad \text{volts} \;\ldots\ldots\ldots\ldots\ldots\ldots\; (6)$$

This is referred to as the magnetic current through surface S. For a moving surface S, the limits of the surface integral in equation (6) are functions of time, but the equation still applies. It is important to clarify at this point, that when we evaluate the value of dφ/dt over a surface which is moving in proximity to magnetic field activity, we treat the surface as though it were stationary for the instant under consideration. The partial time derivative of φ, is the time rate of change of flux through surface S, due only to the changing magnetic field density B. Any increase of φ due to the motion of the surface in the B-field, is not included in that calculation.

Continuing this discussion leads us to note that an electric field must be present in any region containing a time-varying magnetic field. This is shown by the following equation:

$$\oint_C E \times dl = \frac{-\partial \varphi}{\partial t} \quad \ldots\ldots\ldots\ldots\ldots\ldots\; (7)$$

In this equation, φ is the magnetic flux in webers out of the positive side of any surface having path C as its contour. Combining equations (7) and (4), we are able to calculate the e.m.f. about a closed path C as shown here:

$$\text{e.m.f.} = \oint_C E \times dl \;+\; (V \times B)\, dl \;\ldots\ldots\ldots\ldots\ldots\ldots\ldots (8)$$

or in another form:

$$\text{e.m.f.} = \frac{-\partial \varphi}{\partial t} \;+\; \oint_C (V \times B)\, dl \;\ldots\ldots\ldots\ldots\ldots\ldots\ldots (9)$$

So, the e.m.f. around a closed path consists in general of two components. The component dφ/dt is the variational e.m.f. and the second component is the motional E-field. In equation (9), (V x B)dl can, by means of a vector identity, be replaced with B x (V x dl)A. V is the sideways velocity of d: the vector V x dl has magnitude Vdl and a direction normal to the surface ds swept out by the moving length dl in time dt. Letting Bn denote the component of B normal to this area, we can see that the quantity -B x (V x dl) becomes -BnVdl and equation 9 can be re-written as:

$$\text{e.m.f.} = \frac{-\partial \varphi}{\partial t} \;+\; \oint_C Bn\; V\; dl \;\ldots\ldots\ldots\ldots\ldots\ldots\ldots (10)$$

Clearly, the integral of BnV around the closed contour C with sideways velocity of magnitude V for each length dl traversed, is simply the time rate of change of the magnetic flux through the surface bounded by C. This change is directly due to the passage of path C through lines of magnetic flux. Hence, the complete expression for e.m.f. in equation (10) is the time rate of change of the magnetic flux over any surface S, bounded by the closed path C, due to the changing magnetic field and the movement of the path through the magnetic field. Equation (10) may be written:

$$\text{e.m.f.} = -d\varphi / dt \;\ldots\ldots\ldots\ldots\ldots\ldots\ldots\ldots (11)$$

Note: The distinction between equations (7) and (11) is that equation (7) contains only the variational e.m.f. while equation (11) is the sum of the variational and motional e.m.f. values. In equation (7), the partial time derivative of magnetic flux φ is the rate of flux change due only to the time-varying magnetic field, while equation (11) includes the total time derivative of the rate of flux change due to the time-varying magnetic field and path C's passage through the magnetic field. If the closed path C is not passing through lines of magnetic flux, then equation (7) and equation (11) are equivalent.

It is also important to point out that dφ/dt in equation (11) does not necessarily mean the total time rate of change of the flux φ over the surface S. For example, the flux over surface S is bounded by the closed contour C of the left portion of the electric circuit shown in Fig.1.

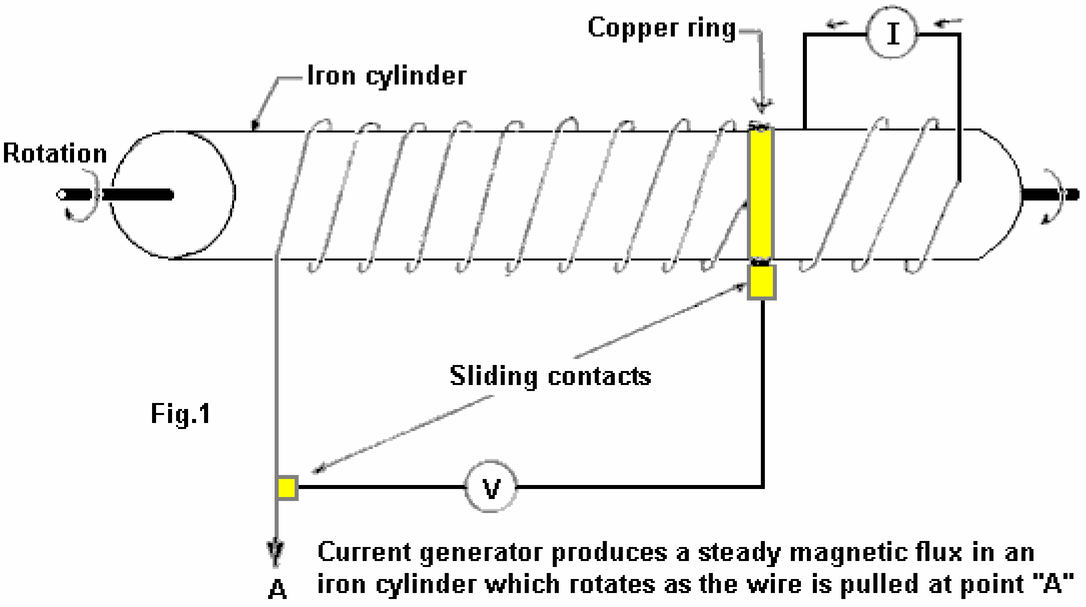

Fig.1

Current generator produces a steady magnetic flux in an iron cylinder which rotates as the wire is pulled at point "A"

The flux is changing as the coil is unwound by the rotation of the cylinder, as illustrated. However, since B is static, there is no variational e.m.f. and since the conductors are not modulating lines of flux, there is

no motional e.m.f. Thus, dφ/dt in equation (11) is zero, even though the flux is changing with time. Note that dφ/dt was defined as representing the right hand part of the expression in equation (10) and dφ/dt must not be interpreted more broadly than that.

In the application of the present equations, it is required that all flux densities and movements are referred to a single, specified co-ordinate system. In particular, the velocities will all be with respect to this system alone and not interpreted as relative velocities between conductors or moving lines of flux. The co-ordinate system is selected arbitrarily and the magnitudes of variational and motional fields depend upon the selection.

Example 1:

A fundamental electric generator is shown in Figure 2:

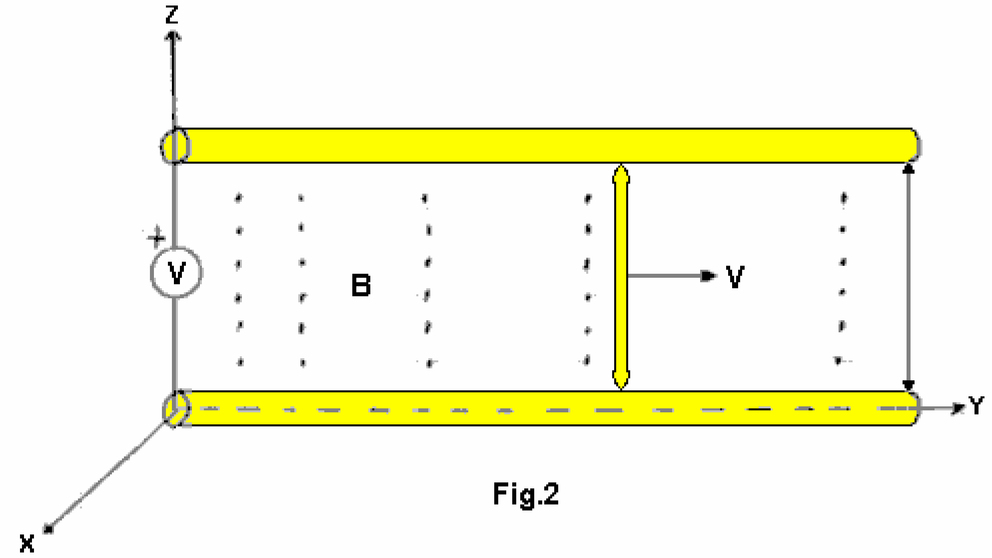

Fig.2

The parallel, stationary conductors, separated by distance "l", have a stationary voltmeter connected across them. The circuit is completed by a moving conductor connected to the parallel conductors by means of two sliding contacts. This conductor is connected at y = 0 at time t = 0, and it moves to the right at a constant velocity V = Vay. The applied flux B is represented by dots on Fig.2 and has a magnitude of B = B_O CosBy Coswt ax. The unit vectors in the direction of the co-ordinate axes are ax, ay and az respectively.

Solution: Let S denote the plane rectangular surface bounded by the closed electric circuit, with a positive side selected as the side facing you. The counter-clockwise e.m.f. around the circuit is dφ/dt with φ signifying the magnetic flux out of the positive side of S (As ds = 1 dy ax). The scalar product B x ds is B_O l CosBy, Coswt dy; integrating from y = 0 to y = y gives:

$$\varphi = B_0 l \sin By_1 \cos wt \ldots\ldots\ldots\ldots\ldots\ldots\ldots (12)$$

With y_1 denoting the instantaneous y position of the moving wire. The counter-clockwise e.m.f. is found by replacing y with vt and evaluating dφ/dt. The result is:

$$\text{e.m.f.} = wB_0 l \,/\, B \sin Bvt \sin wt - B_0 l v \cos Bvt \cos wt \ldots\ldots\ldots\ldots\ldots (13)$$

The variational (transformer) component is determined with the aid of equation (12) and is $wB_O l/B\sin By$ sinwt where y = vt. This is the first component on the right hand side of equation (13).
Note: y_1 was treated as a constant when evaluating the partial time derivative of φ.

The motional E-field is the line integral of V x B along the path of the moving conductor. As V x B is -B_O vcosBy_1 coswt ax and As dl is dz ax, evaluation of the integral -B_O vcosBy_1 coswt dz from Z = 0 to Z = 1 results in a motional E-field of -B_O lvcosBv_1 coswt. This component results from modulation of the lines of flux by the moving conductor. If the voltmeter draws no current, there can be no electromagnetic force on the free electrons of the wire. Therefore, the e.m.f. along the path of the metal conductors including the moving conductor, is zero.

Example 2:

Suppose the conductor with the sliding taps is stationary (V = 0) and it is located at $y = y_1$. Also, suppose that the magnetic field B is produced by a system of moving conductors which are not shown in Fig.2 and those conductors are travelling with a constant velocity V = Vay. At time t = 0, the magnetic field B is B_O sinBy ax. Determine the voltage across the voltmeter.

Solution: There is no motional E-field because the conductors in Fig.2 are at rest (stationary) with respect to our selected co-ordinate system. However, the magnetic field at points fixed with respect to the co-ordinate system is changing with time and as a result, there is a variational e.m.f. Since the B-field at time t = 0 is B_O sinBy ax and has a velocity of V = Vay, it can be calculated that the B-field as a function of time is BOsin[B(y-vt)] ax. This is verified by noting that an observer located at time t = 0 who is travelling at the constant velocity (V = Vay) of the moving current, would have a y co-ordinate of y = y + Vt and an accordingly different expression for B. He would observe a constant field where the magnetic current density is:

$$\frac{\partial B}{\partial t} = -BvB_o \cos B(y - Vt)\, ax$$

The counter-clockwise e.m.f. can be arrived at by taking the negative of an integral of the above expression for the rectangular surface bounded by the electric circuit with the positive side facing you, with the limits of zero and y. The resulting e.m.f. equals:

$$B_o lv[\sin B(y_1 - vt) + \sin Bvt]$$

which is the voltage across the meter.

Induced Motional Field - Negative Energy:

Conventional theory says that electric fields and magnetic fields are different things. Consider for a moment, a charge with an electric field around it. If the charge is moved, then a magnetic field develops and the moving charge constitutes a current. If an observer were to move along with the charge, then he would see no relative motion, no current and no magnetic field. A stationary observer would see motion, current and a magnetic field. It would appear that a magnetic field is an electric field observed from a motional reference frame. Similarly, if we take a mass with a gravity field around it, and we move the mass and create a mass current, a new field is also created. It is a different kind of gravity field with no source and no sink. It is called the "Protational field" and is also known as the "Lense-Thirring Effect". This field and it's governing principles will form the basis for future anti-gravitational devices (see figures 1 to 4).

Fig.3

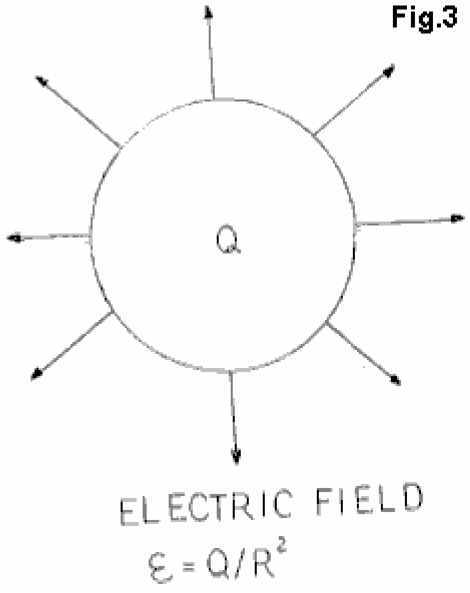

Fig.4

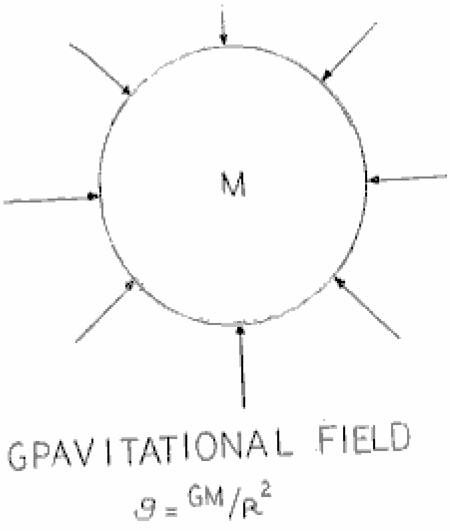

Within the confined are of the Vacuum Triode box, the space-time continuum is reversed by the fields which are produced in the presence of excited coherent space flux. These quanta have been attracted from, and ultimately extracted from the virtual vacuum, the infinitely non-exhaustible Diac Sea. For a more detailed mathematical format see Tom Bearden's paper "The Phase Conjugate Vacuum Triode" (23rd April 1987). Much of the theory which likely applies to the vacuum triode has been developed in the field of phase-conjugate optics.

With regards to over-unity phenomena, it is important to note that so long as positive energy is present in a positively-flowing time regime, then unity and over-unity power gains are not possible. The summation of the losses due to resistance, impedance, friction, magnetic hysteresis, eddy currents and windage losses of rotating machinery will always reduce overall efficiency below unity for a closed system. The laws of conservation of energy always apply to all systems. However, the induced motional E-field changes the system upon which those laws need to be applied. Since the vacuum triode operates in more than four dimensions and provides a link between the multi-dimensional reality of the quantum state and the Dirac Sea, we are now dealing with an open-ended system and not the "closed system" within which all conservation and thermodynamic laws were developed.

To achieve unity, the summation of all magnetic and ohmic losses must equal zero. To achieve this state, negative energy and negative time need to be created. When this is achieved, all ohmic resistance becomes zero and all energy then flows along the outside of conductors in the form of a special space field. Negative energy is fully capable of lighting incandescent lights, running motors and performing all of the functions of positive energy tested to date. When run in parallel with positive energy however, cancellation (annihilation) of opposing power types occurs. This has been fully tested in the laboratory.

Once unity has been achieved and the gate to the Dirac sea opened, over-unity is affected by loading the open gate more and more, which opens it further to the point where direct communication / interaction with the nucleus of the atom itself is achieved. Output of the vacuum triode is not proportional to the excitation input as the output produced by the device is directly proportional to the load which is placed on it. That load is the only dependent variable for device output. The triode's output voltage and frequency always remains constant due to the conditioning of the motional E-field in the permanent magnets and the small regulated excitation signal which is provided through a small oscillator. Regulation remains constant and the triode output looks into an in-phase condition ($\cos\theta=1$ Kvar=1) under all load characteristics.

the vacuum triode is a solid-state device consisting of conditioned permanent magnets capable of producing a motional field. This field opens the gate to the Dirac Sea from where negative energy flows into the triode's receiving coils. The coils are wound with very small-diameter wire but in spite of that, they are capable of producing more than 5 kilowatts of useful power. This in itself, is a clear indicator that the type of electrical energy collected by the device is not conventional electrical energy. The wire sizes used in the construction of the device would not be capable of carrying such large currents without excessive heat gain, however, the triode's coils actually run cooler when loaded at 5 kilowatts.

The fundamental magnets have been broken free of the binding forces which constrained them to be steady-state single-pole uniform magnetic flux devices. They are now able to simply support mass, as demonstrated with the transformer steel illustration. They can now easily be made to adopt a dynamic motional field by applying a tiny amount of excitation. Specifically, 1 milliamp at 10 volts (10 milliwatts) of excitation at 60 Hz enables the coils of the triode to receive from the Dirac Sea, more than 5,000 watts of usable negative energy. It has not yet been determined how much more energy can be safely removed.

Meguer Kalfaian's Energy Generator

There is a patent application which has some very interesting ideas and claims. It has been around for a long time but it has not been noticed until recently. Personally, I get the impression that it is more a concept rather than a solidly based prototype-proven device, but that is only my impression and you need to make up your own mind on the matter.

Patent Application GB 2130431A **31st May 1984** **Inventor: Meguer Kalfaian**

Method and means for producing perpetual motion with high power

ABSTRACT

The perpetual static energies, as provided by the electron (self spin) and the permanent magnet (push and pull) are combined to form a dynamic function. Electrons emitted from a heated coil **F** are trapped permanently within the central magnetic field of a cylindrical magnet **M5**. A second magnet **M6**, in opposite polarity to the poles of the electrons causes polar tilt, and precession. This precession radiates a powerful electromagnetic field to a coil **L** placed between the cylindrical magnet and a vacuum chamber **C** - wound in a direction perpendicular to the polar axes of the electrons. Alternatively, the electromagnetic radiation is emitted as coherent light. The original source of electrons is shut off after entrapment.

SPECIFICATION

Method and means for producing perpetual motion with high power. This invention relates to methods and means for producing perpetual motion. An object of the invention is, therefore, to produce useful perpetual motion for utility purposes.

BRIEF EMBODIMENT OF THE INVENTION

The electron has acquired self spin from the very beginning of its birth during the time of creation of matter, and represents a perpetual energy. But self spin alone, without polar motion is not functional, and therefore, useful energy cannot be derived from it. Similarly, the permanent magnet represents a source of perpetual energy, but since its poles are stationary, useful energy cannot be derived from it.

However, the characteristics of these two types of static energies differ one from the other, and therefore the two types of energies can be combined in such a manner that, the combined output can be converted into perpetual polar motion.

In one exemplary mode, a cylindrical vacuum chamber having a filament and a cathode inside, is enclosed within the central magnetic field of a cylindrical permanent magnet, the magnetisation of which can be in a direction either along the longitudinal axis, or from the centre to the circumferential outer surface of the cylinder. When current is passed through the filament, the electrons emitted from the cathode are compressed into a beam at the centre of the cylindrical chamber by the magnetic field of the cylindrical magnet. Thus, when the current through the filament is shut off, the electrons in the beam remain permanently trapped inside the magnetic field.

In such an arrangement, the poles of the electrons are aligned uniformly. When a second permanent magnet is held against the beam in repelling polarity, the poles of the electrons are pushed and tilted from their normal longitudinal polar axes. In such tilted orientations, the electrons now start wobbling (precessing) in gyroscopic motions, just like a spinning top when it is tilted to one side. The frequency of this wobbling (precessional resonance) depends upon the field strengths of the two magnets, similar to the resonance of the violin string relative to its tensional stretch. The polar movements of the electrons radiate an electromagnetic field, which can be collected by a coil and then converted into any desired type of energy. Because of the uniformly aligned electrons, the output field is coherent, and the output power is high.

Observed examples upon which the invention is based:
The apparatus can best be described by examples of a spinning top in wobbling motion. Thus, referring to the illustration of **Fig.1**, assume that the spinning top **T** is made of magnetic material, as indicated by their pole signs (**S** and **N**). Even though the top is magnetic, the spin motion does not radiate any type of field, which can be received and converted into a useful type of energy. This is due to the known fact that, radiation is created only when the poles of the magnet are in motion, and in this case, the poles are stationary.

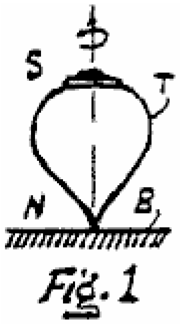

Fig.1

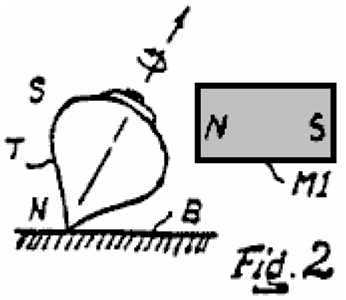

Fig.2

When a magnet **M1** is held from a direction perpendicular to the longitudinal polar axis of the top, as shown in **Fig.2**, the polar axis of the top will be tilted as shown, and keep on spinning in that tilted direction. When the magnet **M1** is removed, however, the top will try to regain its original vertical posture, but in doing so, it will wobble in gyroscopic motion, such as shown in **Fig.3**. The faster the top spins, then the faster the wobbling motion will be.

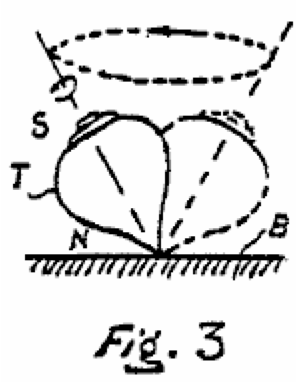

Fig. 3

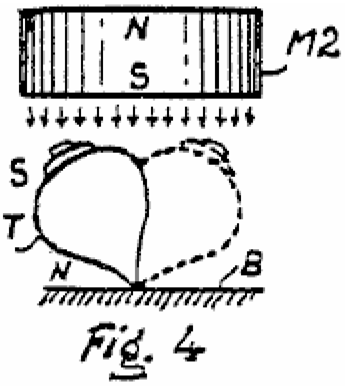

Fig. 4

The reason that the top tilts angularly, but does not wobble when the magnet **M1** is held from horizontal direction, is that, the one-sided pull prevents the top from moving away from the magnetic field for free circular wobble. Instead of holding the magnet **M1** from the side of the top, we may also hold the magnet from a direction above the top, as shown in **Fig.4**. In this case, however, the polar signs between the magnet and the top are oriented in like signs, so that instead of pulling action, there is pushing action between the magnet and the top - causing angular tilt of the top, such as shown in **Fig.4**. The pushing action of the magnetic field from above the top is now equalised within a circular area, so that the top finds freedom to wobble in gyroscopic rotation.

The important point in the above given explanation is that, the top tries to gain its original vertical position, but it is prevented from doing so by the steady downward push from the static magnetic field of magnet **M2**. So, as long as the top is spinning, it will wobble in a steady state. Since there is now, polar motion in the wobbling motion of the top, this wobbling motion can easily be converted into useful energy. To make this conversion into perpetual energy, however, the top must be spinning perpetually. Nature has already provided a perpetually spinning magnetic top, which is called, "the electron" - guaranteed to spin forever, at a rate of 1.5 x 10^{23} (one hundred fifty thousand billion billion revolutions per second).

BRIEF DESCRIPTION OF THE DRAWINGS

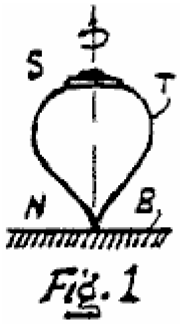

Fig.1

Fig.1 illustrates a magnetic spinning top, used to describe the basic principles of the invention.

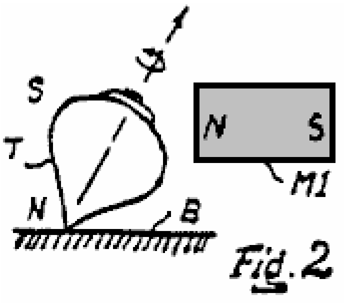

Fig.2

Fig.2 illustrates a controlled top for describing the basic principles of the invention.

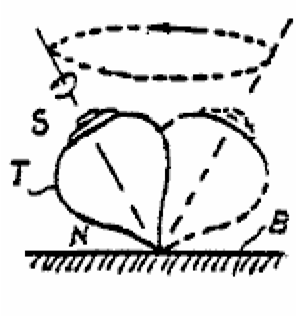

Fig. 3

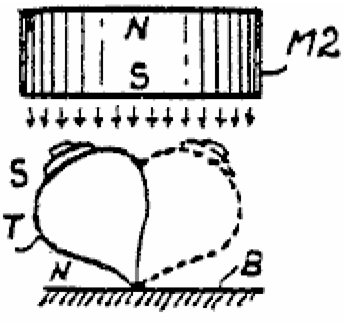

Fig. 4

Fig.3 and **Fig.4** illustrate spinning tops in wobbling states for describing the basic principles of the invention.

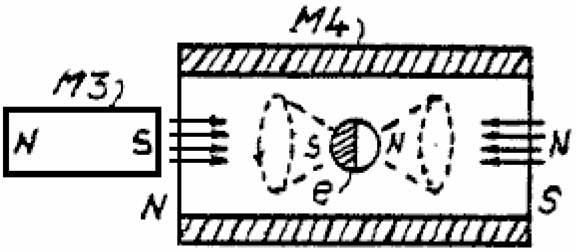

Fig. 5

Fig.5 shows how an electron can be driven into a wobbling state under the control of permanent magnets.

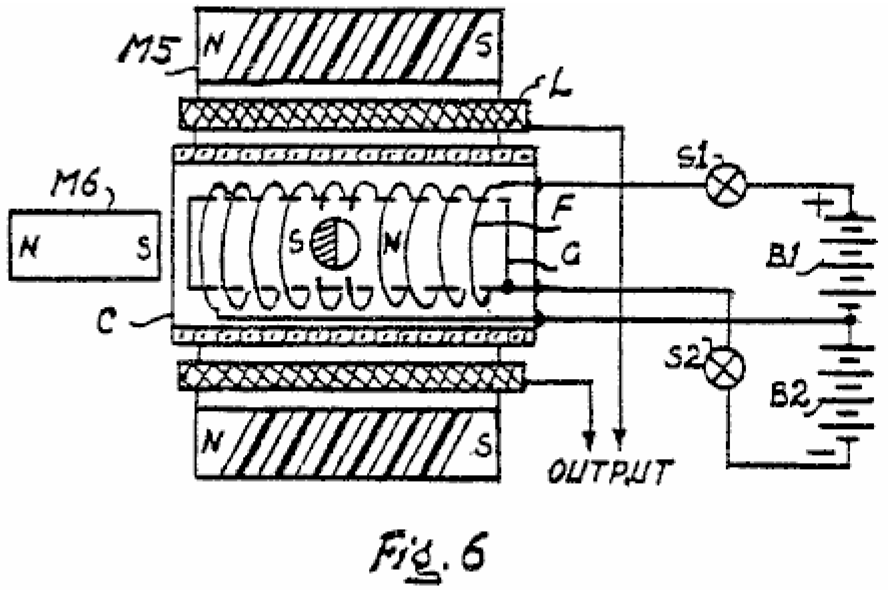

Fig.6 is a practical arrangement for obtaining perpetual motion.

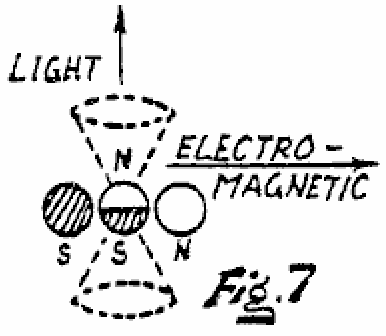

Fig.7 shows a natural atomic arrangement for obtaining precessional resonance.

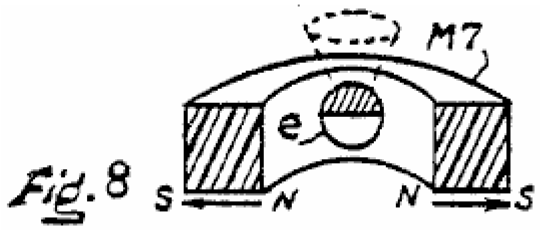

Fig.8 shows a different type of electron trapping permanent magnet, to that used in **Fig.6**.

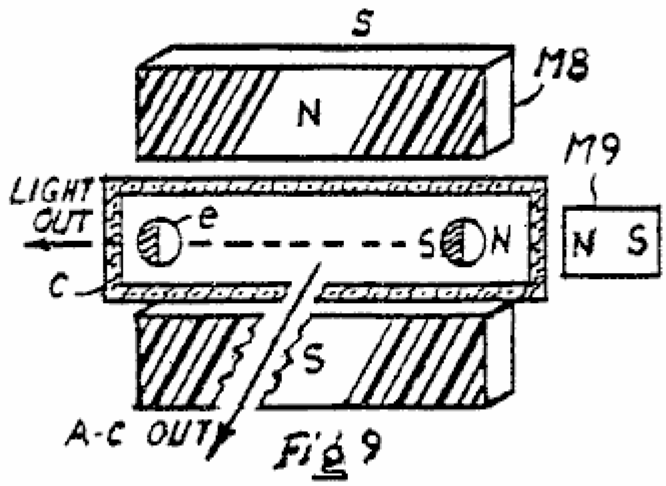

Fig 9

Fig.9 is a modification of **Fig.6**; and

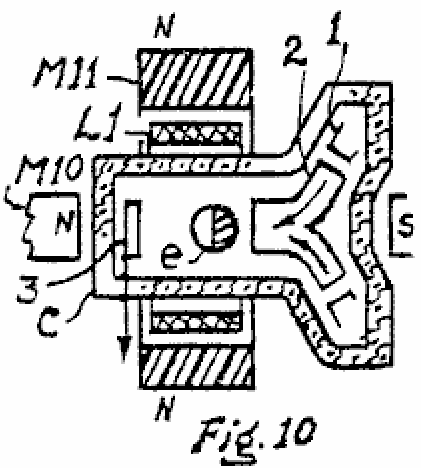

Fig. 10

Fig.10 is a modification of the electron trapping magnets, used in **Fig.6**.

BEST MODE OF CARRYING OUT THE INVENTION
Referring to the exemplary illustration of **Fig.4**, the spinning top **T** is pivoted to the base B by gravity.

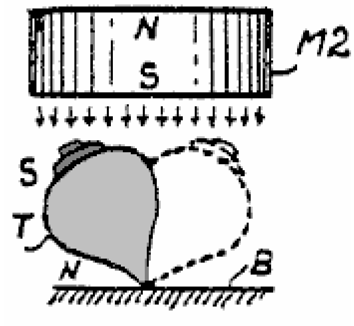

Fig. 4

In the case of the electron, however, it must be held tightly between some magnetic forces. So, referring to the illustration of **Fig.5**, assume that an electron **e** is placed in the centre of a cylindrical magnet **M4**. The direction of

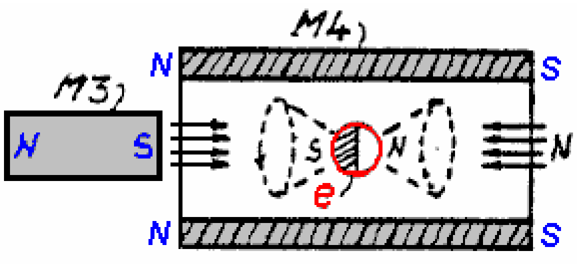

Fig. 5

magnetisation of the magnet **M4**, and the polar orientation of the electron **e** are marked in the drawing. In this case, when a permanent magnet **M3** is placed at the open end of the cylindrical magnet **M4**, the electron **e** will precess, in a manner, as described by way of the spinning top. The difficulty in this arrangement is that, electrons cannot be separated in open air, and a vacuum chamber is required, as in the following:

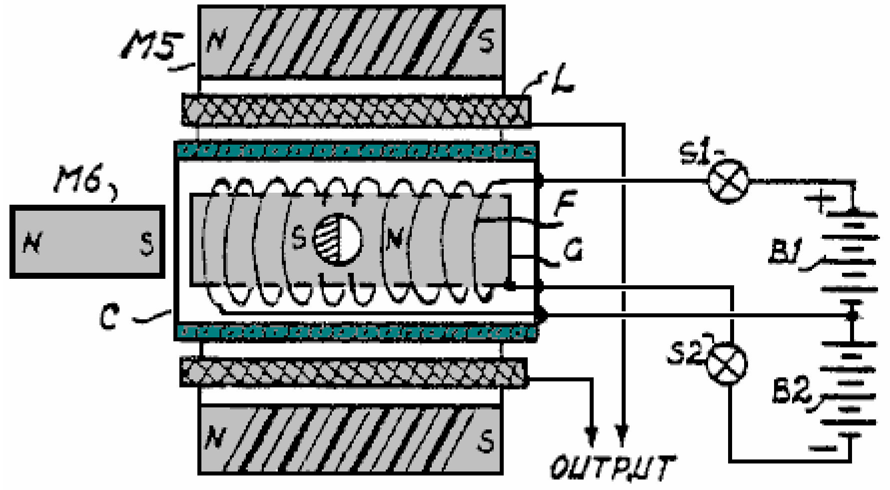

Fig. 6

Fig.6 shows a vacuum chamber **C**, which contains a cylindrically wound filament **F**, connected to the battery **B1** by way of the switch **S1**. Thus, when the switch **S1** is turned ON, the filament **F** is lighted, and it releases electrons. External to the vacuum chamber **C** is mounted a cylindrical permanent magnet **M5**, which compresses the emitted electrons into a beam at the centre of the chamber.

When the beam is formed, the switch is turned OFF, so that the beam of electrons is permanently trapped at the centre of the chamber.

The permanent trapping of the electrons in the chamber **C** represents a permanent storage of static energy. Thus, when a permanent magnet **M6** is placed to tilt the polar orientations of the uniformly poled electrons in the beam, they start precessing perpetually at a resonant frequency, as determined by the field strengths of the magnets **M5** and **M6**.

The precessing electrons in the beam will radiate quadrature phased electromagnetic field in a direction perpendicular to the polar axes of the electrons.

Thus, a coil **L** may be placed between the magnet **M5** and the vacuum chamber **C**, to receive the radiated field from the beam. The output may then be utilised in different modes for practical purposes, for example, rectified for DC power use.

The electron beam-forming cylindrical magnet **M5**, which may also be called a focusing magnet, is shown to be bipolar along the longitudinal axis. The direction of magnetisation, however, may be from the central opening to the outer periphery of the magnet, as shown by the magnet **M7**, in **Fig.8** but the precessing magnet **M6** will be needed in either case.

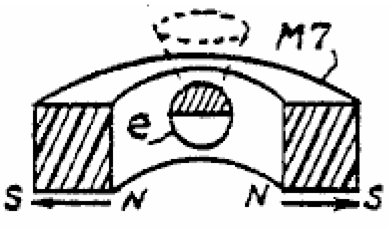

Fig.8

In the arrangement of **Fig.6**, I have included a current control grid **G**. While it is not essential for operation of the arrangement shown, it may be connected to a high negative potential **B2** by the switch **S2** just before switching the **S1** in OFF position, so that during the cooling period of the filament, there will occur no escape of any electrons from the beam to the cathode. Also, the grid **G** may be switched ON during the heating period of the cathode, so that electrons are not forcibly released from the cathode during the heating period, and thereby causing no damage to the cathode, or filament.

Biological precessional resonance

Electron precessional resonance occurs in living tissue matter, as observed in laboratory tests. This is called ESR (Electron Spin Resonance) or PMR (Paramagnetic Resonance). In tissue matter, however, the precessing electron is entrapped between two electrons, as shown in **Fig.7**, and the polar orientations are indicated by the polar signs and shadings, for clarity of drawing.

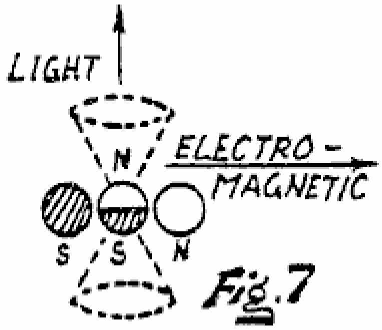

Fig.7

Simulation

The arrangement of **Fig.7** may be simulated artificially in a manner as shown in **Fig.9**, wherein, the electron trapping magnet is a pair of parallel spaced magnets **M8**. In actual practice, however, the structure of this pair of magnets **M8** can be modified. For example, a second pair of magnets **M8** may be disposed between the two pairs, so that the directions of the transverse fields between the two pairs cross mutually perpendicular at the central longitudinal axis of the vacuum chamber. The inner field radiating surfaces of these two pairs of magnets may be shaped circular, and the two pairs may be assembled, either by physical contact to each other, or separated from each other.

Modifications

Referring to the arrangements of **Fig.6**, **Fig.9** and **Fig.10**, when the electron is in precessional gyroscopic motion, the radiated field in a direction parallel to the polar axis of the electron, is a single phased corkscrew waveform, which when precessed at light frequency, the radiation produces the effect of light.

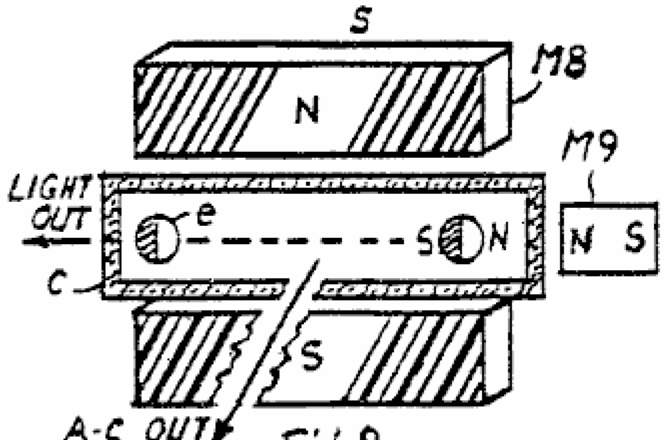

Fig 9

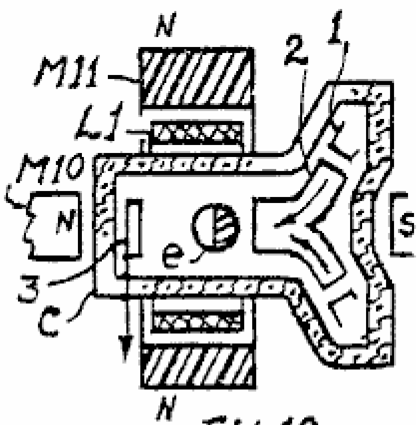

Fig.10

Whereas, the field in a direction perpendicular to the axis of the electron produces a quadrature phased electromagnetic radiation. Thus, instead of utilising the output of electron precession for energy purposes, it may be utilised for field radiation of either light or electromagnetic waves, such as indicated by the arrows in **Fig.9**. In this case, the output will be coherent field radiation.

In reference to the arrangement of **Fig.6**, the electron emission is shown to occur within the central magnetic field of the focusing magnet **M5**. It may be practically desired, however, that these electrons are injected into the central field of the cylindrical magnet from a gun assembly, as shown in an exemplary arrangement of **Fig.10**. In this case, the vacuum chamber **C** is flanged at the right hand side, for mounting an electron emitting cathode **1** (the filament not being shown), and a curved electron-accelerating gun **2**. The central part of this flange is recessed for convenience of mounting an electron-tilting magnet (as shown), as close as possible to the electron beam. In operation, when current is passed through the filament, and a positive voltage is applied (not shown) to the gun **2**, the emitted electrons from the cathode are accelerated and injected into the central field of the magnet **11**. Assuming that the open end of the gun **2** overlaps slightly the open end of the cylindrical central field of the magnet **M1**, and the positive accelerating voltage applied to the gun **2** is very low, the accelerated electrons will enter the central field of the magnet **M1**, and travel to the other end of the field. Due to the low speed acceleration of the electrons, however, they cannot spill out of the field, and become permanently entrapped therein.

In regard to the direction in which the coil **L1** is positioned, its winding should be in a direction perpendicular to the longitudinal axis of the beam to which the polar axes of the electrons are aligned uniformly in parallel. In one practical mode, the coil **L1** may be wound in the shape of a surface winding around a tubular form fitted over the cylindrical vacuum chamber.

In regard to the operability of the apparatus as disclosed herein, the illustration in **Fig.7** shows that the field output in a direction parallel to the polar axis of the electron is singular phased, and it produces the effect of light when the precessional frequency is at a light frequency. Whereas, the output in a direction perpendicular to the polar axis of the electron is quadrature phased, which is manifested in practiced electromagnetic field transmission.

In regard to experimental references, an article entitled "Magnetic Resonance at high Pressure" in the "Scientific American" by George B. Benedek, page 105 illustrates a precessing nucleus, and indicates the direction of the electromagnetic field radiation by the precessing nucleus. The same technique is also used in the medical apparatus "Nuclear magnetic resonance" now used in numerous hospitals for imaging ailing tissues (see "High Technology" Nov. Dec. 1982. Refer also to the technique of detecting Electron Spin Resonance, in which electrons (called "free radicals") are precessed by the application of external magnetic field to the tissue matter. In all of these practices, the electromagnetic field detecting coils are directed perpendicular to the polar axes of the precessing electrons or the nuclei.

In regard to the production of light by a precessing electron, in a direction parallel to the polar axis of the precessing electron, see an experimental reference entitled "Free electrons make powerful new laser" published in "high Technology" February 1983 page 69.

In regard to the aspect of producing and storing the electrons in a vacuum chamber, it is a known fact by practice that the electrons are entrapped within the central field of a cylindrical permanent magnet, and they will remain entrapped as long as the magnet remains in position.

With regard to the performance of obtaining precessional resonance of the electron, the simple example of a wobbling top is sufficient, as proof of operability.

Having described the preferred embodiments of the invention, and in view of the suggestions of numerous possibilities of modifications, adaptations, adjustments and substitutions of parts, it should be obvious to the skilled in related arts that other possibilities are within the spirit and scope of the present invention.

CLAIMS

1. The method of effecting perpetual retaining and precession of electrons, for obtaining perpetual field radiation from the polar motions of said precessing electrons, comprising the steps of:

producing electrons;
compressing said produced electrons into a perpetually retainable state; and
precessing said compressed electrons for effecting perpetual field radiation by the polar motions of said precessing electrons.

2. The method of producing perpetual field radiation for conversion into perpetual energy, the method comprising the steps of:

producing electrons;
imposing a first perpetually occurring electron controlling force from a first direction upon said produced electrons into a perpetually retainable state; and
imposing a second perpetually occurring electron controlling force from a second direction upon said retained electrons, for inducing precessional motions to the electrons, and thereby obtaining said perpetual field radiation for conversion into perpetual energy.

3. The method of generating perpetual simultaneous single phased and quadrature phased coherent field radiations, comprising the steps of:

producing electrons;
imposing a first perpetually occurring electron controlling force from a first direction upon said produced electrons into a uniformly polarised perpetually retainable compressed state; and
imposing a second perpetually occurring electron controlling force from a second direction upon said compressed electrons, for effecting precessional motions of the electrons, thereby causing a quadrature phased coherent field radiation in a direction perpendicular to the uniformly polarised polar axes of said electrons, and a simultaneous single phased coherent field in a direction parallel to the polar axes of said electrons.

4. The method of producing perpetual dynamic motions for conversion into energy, comprising the steps of:

trapping and compressing a concentrated quantity of electrons within a first electron controlling field in a vacuum space, whereby forming a tightly confined permanent concentration of statistically spinning electrons, both of their polar axes and polar orientations being uniformly aligned; and
tilting the polar axes of said trapped electrons by a second permanent electron controlling field, for inducing precessional gyrations to the electrons in the form of perpetual dynamic motions, which are adaptively convertible into energy.

5. Apparatus for producing perpetual dynamic motions, which comprises:

a vacuum chamber having an electron-emitting means; an auxiliary means for causing emission of electrons from said electron-emitting means;
a first permanent magnet disposed externally of said chamber for trapping and compressing a quantity of said emitted electrons within its magnetic field, with uniform alignments of the polar axes and polar orientations of said electrons;
means for stopping said auxiliary means from further causing emission of electrons from said electron emitting means, whereby forming a tightly confined concentration of statistically spinning electrons permanently entrapped within said first permanent magnet; and
a second permanent magnet, the field projection of which is oriented to tilt the polar a axes of said trapped electrons, for causing precessional gyrations of the electrons, as representation of said dynamic motions.

6. Apparatus comprising:
a vacuum chamber having an electron emitting means;

an auxiliary means for causing emission of electrons from said electron emitting means;
a first permanent magnet disposed externally of said chamber for permanently trapping and compressing a quantity of said emitted electrons within its magnetic field, with uniform alignments of the polar axes and polar orientations of said electrons; and
a second permanent magnet so oriented with respect to said entrapped electrons that, the field projection from the second magnet causes precessional gyrations of the uniformly aligned entrapped electrons.

7. The apparatus as set forth in claim 6, wherein said first permanent magnet is cylindrical magnet surrounding said chamber, and the magnetisation of said first magnet is in a direction along the longitudinal axis of the cylinder.

8. The apparatus as set forth in claim 6, wherein said first permanent magnet is cylindrical magnet surrounding said chamber, and the magnetisation of said first magnet is in a direction from the central hollow space to the outer surface of said cylinder.

9. The apparatus as set forth in claim 6, wherein the polar sign of field projection from said second magnet to said entrapped electrons is in repelling polar sign.

10. The apparatus as set forth in claim 6, wherein is included a field responsive coil mounted between said first magnet and said vacuum chamber, for receiving the field radiation that is effected by the motions of said gyrating electrons.

11. The apparatus as set forth in claim 6, wherein is included a field responsive coil mounted between said first magnet and said vacuum chamber, the turns of winding of said coil being in a direction perpendicular to the polar axes of said compressed electrons.

12. Apparatus for producing perpetual motion, the apparatus being substantially as hereinbefore described with reference to, and as illustrated by, the accompanying drawings.

Theodore Annis & Patrick Eberly

US Patent App. 20090096219 16th April 2009 Inventors: Theodore Annis & Patrick Eberly

ENERGY GENERATION APPARATUS AND METHODS BASED UPON MAGNETIC FLUX SWITCHING

ABSTRACT

Methods and apparatus generate electricity through the operation of a circuit based on a single magnetic flux path. A magnetisable member provides the flux path. One or more electrically conductive coils are wound around the member, and a reluctance or flux-switching apparatus is used to control the flux. When operated, the switching apparatus causes a reversal of the polarity (direction) of the magnetic flux of the permanent magnet through the member, thereby inducing alternating electrical current in each coil. The flux-switching apparatus may be motionless or rotational. In the motionless embodiments, two or four reluctance switches are operated so that the magnetic flux from one or more stationary permanent magnet(s) is reversed through the magnetisable member. In alternative embodiments, the flux-switching apparatus comprises a body composed of high-permeability and low-permeability materials, such that when the body is rotated, the flux from the magnet is sequentially reversed through the magnetisable member.

FIELD OF THE INVENTION

The present invention relates to methods and apparatus wherein the magnetic flux from one or more permanent magnets is reversed repeatedly in polarity (direction) through a single flux path around which there is wound a conducting coil or coils for the purpose of inducing electricity in the coils.

BACKGROUND OF THE INVENTION

The electromechanical and electromagnetic methods involved in motional electric generators and alternators are well known. Alternators and generators often employ permanent magnets and usually have a rotor and a stator and a coil or coils in which an EMF (electromotive force) is induced. The physics involved for producing electricity is described by the generator equation $V = \int (v \times B) . dl$.

Permanent magnets made of materials that have a high coercively, a high magnetic flux density a high magnetic motive force (mmf), and no significant deterioration of magnetic strength over time are now common. Examples include ceramic ferrite magnets (Fe_2O_3); samarium cobalt ($SmCO_5$); combinations of iron, neodymium, and boron; and others.

Magnetic paths for transformers are often constructed of laminated ferrous materials; inductors often employ ferrite materials, which are used for higher frequency operation for both devices. High performance magnetic materials for use as the magnetic paths within a magnetic circuit are now available and are well suited for the (rapid) switching of magnetic flux with a minimum of eddy currents. An example is the FINEMET® nanocrystalline core material made by Hitachi of Japan.

According to Moskowitz, "Permanent Magnet Design and Application Handbook" 1995, page 52, magnetic flux may be thought of as flux lines which always leave and enter the surfaces of ferromagnetic materials at right angles, which never can make true right-angle turns, which travel only in straight or curved paths, which follow the shortest distance, and which follow the path of lowest reluctance.

A "reluctance switch" is a device that can significantly increase or decrease (typically increase) the reluctance (resistance to magnetic motive force) of a magnetic path in a direct and rapid manner and subsequently restore it to its original (typically lower) value in a direct and rapid manner. A reluctance switch typically has analog characteristics. By way of contrast, an off/on electric switch typically has a digital characteristic, as there is no electricity "bleed-through." With the current state of the art, reluctance switches have magnetic flux bleed-through. Reluctance switches may be implemented mechanically, such as to cause keeper movement to create an air gap, or electrically by several means, or by other means. One electrical means is that of using control coils wound around the flux paths.

Another electrical means is the placement within the flux path of certain classes of materials that change (typically increase) their reluctance upon the application of electricity. Another electrical means is to saturate a region of the switch material so that the reluctance increases to that of air by inserting conducting electrical wires into the material as described by Konrad and Brudny in "An Improved Method for Virtual Air Gap Length Computation," in IEEE Transactions on Magnetics, Vol. 41, No. 10, October 2005.

The patent literature describes a number of constructs that have been devised to vary the amounts of magnetic flux in alternate flux paths by disproportionately dividing the flux from a stationary permanent magnet or magnets between or among alternate flux paths repeatedly for the purpose of generating electricity. The increase of flux in one magnetic path and the corresponding decrease in the other path(s) provide the basis for inducing electricity when coils are wound around the paths. The physics involved for producing electricity by these constructs is described by the transformer equation $V = -\int dB/dt.ds$. A variety of reluctance switching means have been employed to cause the flux to be increased/decreased through a particular alternate path with a corresponding decrease/increase in the other path and to do so repeatedly.

A means of switching flux along alternate paths between the opposite poles of a permanent magnet have included the flux transfer principle described by R. J. Radus, Engineers' Digest, July, 1963.

A result of providing alternate flux paths of generally similar geometry and permeability is that, under particular conditions, the alternate path first selected or the path selected for the majority of the flux will remain a "preferred path" in that it will retain more flux and the other path, despite the paths having equal reluctance. (There is not an automatic equalization of the flux among similar paths.)

Moskowitz, "Permanent Magnet Design and Application Handbook" 1995, page 87 discusses this effect with regard to the industrial use of permanent magnets to lift and release iron and steel by turning the permanent magnet on and (almost) off via reluctance switching that consists of the electric pulsing of coils wound around the magnetic flux paths (the reluctance switches).

Experimental results with four iron rectangular bars (relative permeability=1000) placed together in a square with a bar permanent magnet (flux density measured at one pole=5000 Gauss) between two of the opposing bars roughly in a centre position showed that removal and replacement of the one of the end bars that is parallel to the bar magnet will result in about 80% of the flux remaining in the bar that remained in contact. The results further showed that the preferred path must experience an increase of reluctance about IOx of that of the available alternate path before its disproportionate flux condition will yield and transfer to the alternate path.

Flynn U.S. Pat. No. 6,246,561; Patrick, et al. U.S. Pat. No. 6,362,718; and Pedersen U.S. Pat. No. 6,946,938 all disclose a method and apparatus for switching (dividing) the quantity of magnetic flux from a stationary permanent magnet or magnets between and among alternate paths for the purpose of generating electricity (and/or motive force). They provide for the increase of magnetic flux in one path with a corresponding decrease in the other path(s). There are always at least two paths.

SUMMARY OF THE INVENTION

The present invention relates to methods and apparatus for the production of electricity through the operation of a circuit based upon a single magnetic flux path. A magnetisable member provides the flux path. One or more electrically conductive coils are wound around the member, and a reluctance or flux switching apparatus is used to control the flux. When operated, the switching apparatus causes a reversal of the polarity (direction) of the magnetic flux of the permanent magnet through the member, thereby inducing alternating electrical current in each coil.

According to the invention, the flux switching apparatus may be motionless or rotational. In the motionless embodiments, four reluctance switches are operated by a control unit that causes a first pair of switches to open (increasing reluctance), while another pair of switches close (decreasing reluctance). The initial pair is then closed as the other pair is opened, and so on. This 2x2 opening and closing cycle repeats and, as it does, the magnetic flux from the stationary permanent magnet(s) is reversed in polarity through the magnetisable member, causing electricity to be generated in the conducting coils. An alternative motionless embodiment uses two reluctance switches and two gaps of air or other materials.

In alternative embodiments, the flux switching apparatus comprises a body composed of high-permeability and low-permeability materials, such that when the body is rotated, the flux from the magnet is sequentially reversed through the magnetisable member. In the preferred embodiment the body is cylindrical having a central axis, and the body rotates about the axis. The cylinder is composed of a high-permeability material except for section of low-permeability material that divided the cylinder into two half cylinders. At least one electrically conductive coil is wound around the magnetisable member, such that when the body rotates an electrical current is induced in the coil. The body may be rotated by mechanical, electromechanical or other forces.

A method of generating electrical current, comprises the steps of providing a magnetisable member with an electrically conductive coil wound therearound, and sequentially reversing the flux from a permanent magnet through the member, thereby inducing electrical current in the coil.

BRIEF DESCRIPTION OF THE DRAWINGS

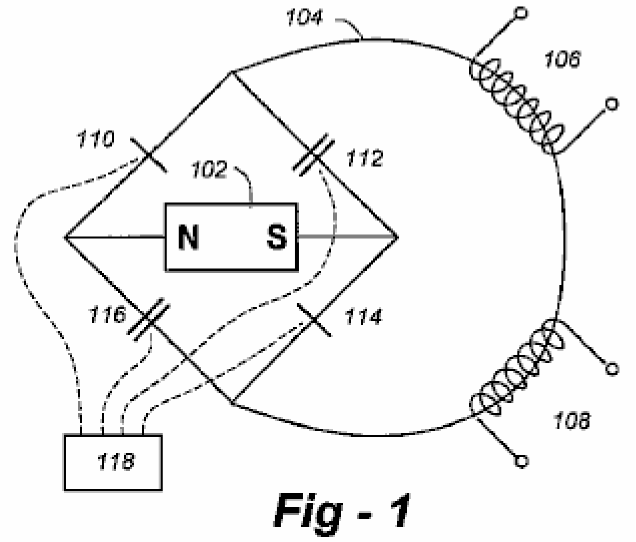

Fig - 1

Fig.1 is a schematic diagram of a magnetic circuit according to the invention.

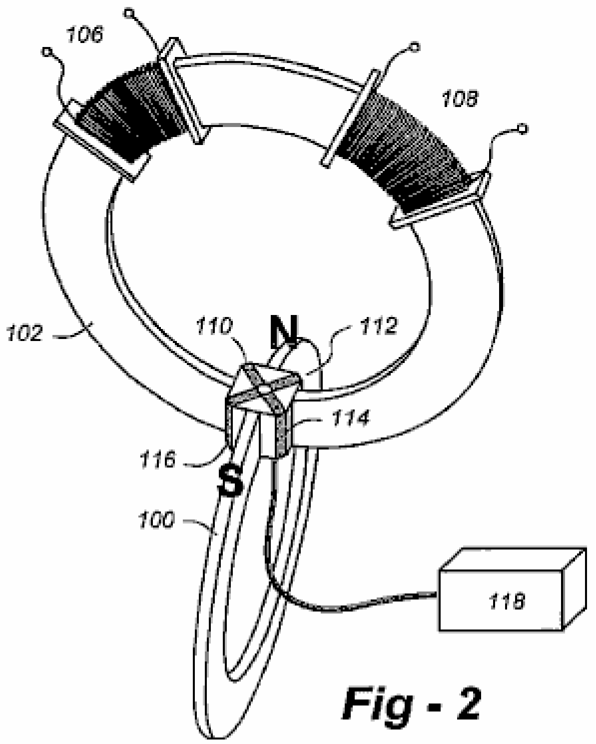

Fig - 2

Fig.2 is a perspective view of an embodiment of the invention based upon motionless magnetic flux switches.

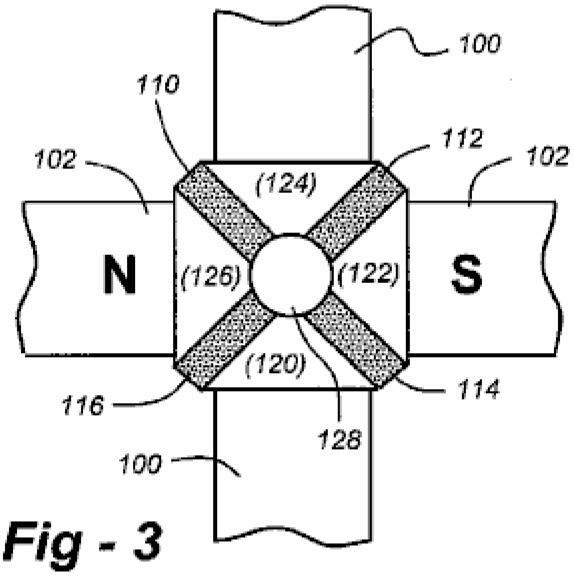

Fig - 3

Fig.3 is a detail drawing of a motionless flux switch according to the invention.

Fig - 4

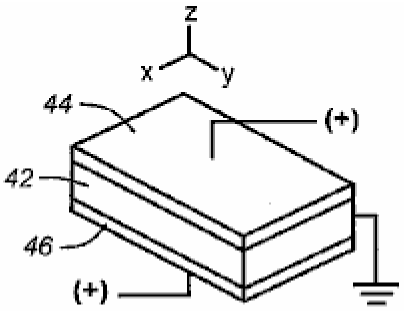

Fig.4 is a detail drawing of a reluctance switch according to the invention.

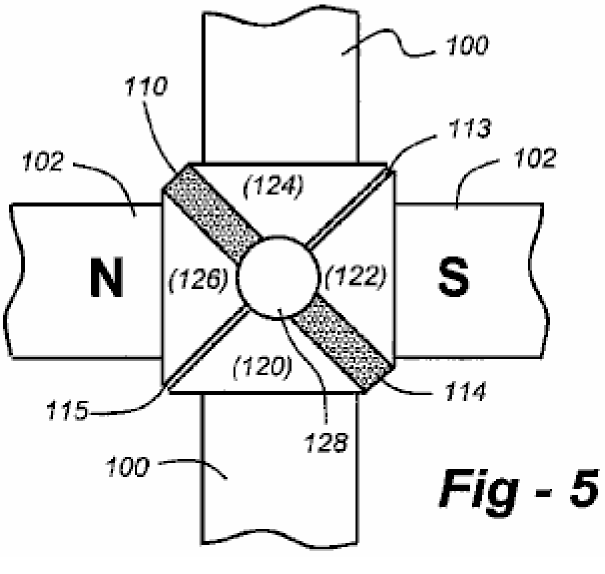

Fig - 5

Fig.5 is a detail drawing of an alternative motionless flux switch according to the invention which utilizes gaps of air or other materials.

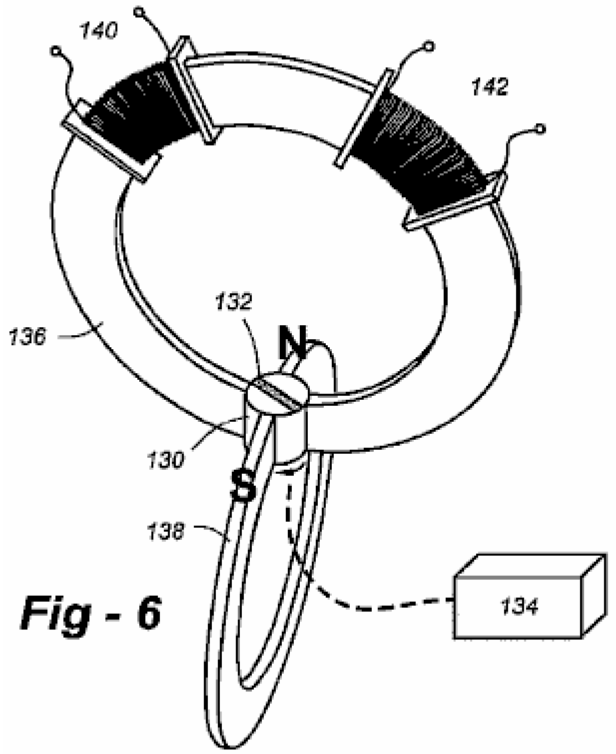

Fig - 6

Fig.6 is a schematic diagram of a system using a rotary flux switch according to the invention.

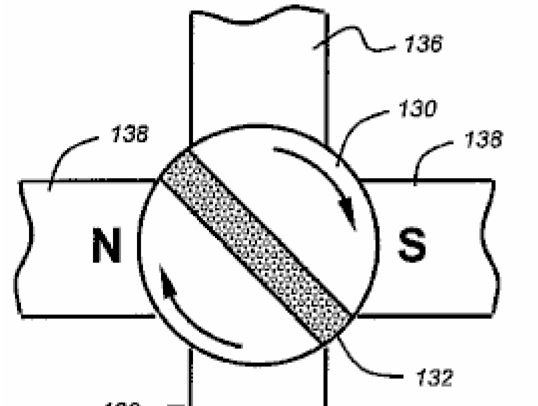

Fig - 7

Fig.7 is a detail drawing of a rotary flux switch according to the invention.

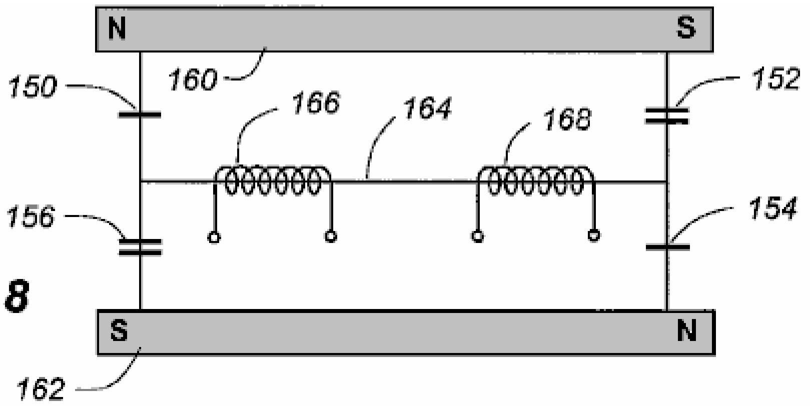

Fig - 8

Fig.8 is a schematic diagram of a circuit according to the invention utilizing two permanent magnets and a single flux path.

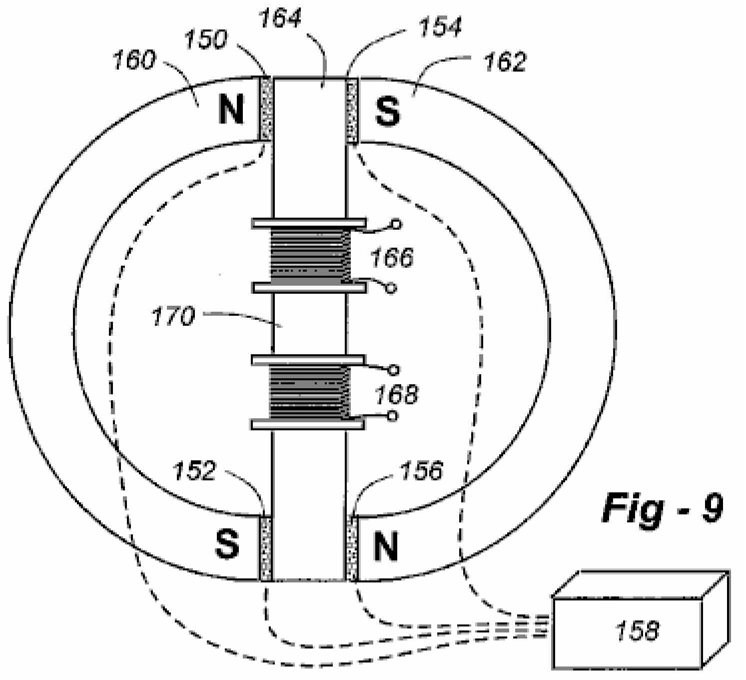

Fig - 9

Fig.9 shows one possible physical embodiment of the apparatus with the components of FIG. 8, including a reluctance switch control unit.

Fig - 10

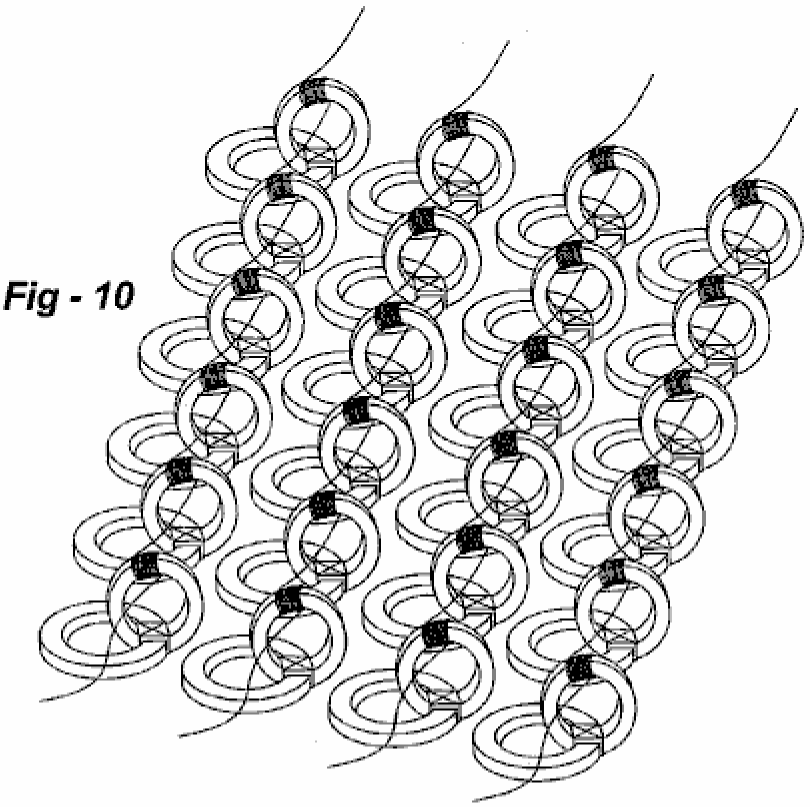

Fig.10 shows and array of interconnected electrical generators according to the invention.

DETAILED DESCRIPTION OF THE PREFERRED EMBODIMENTS

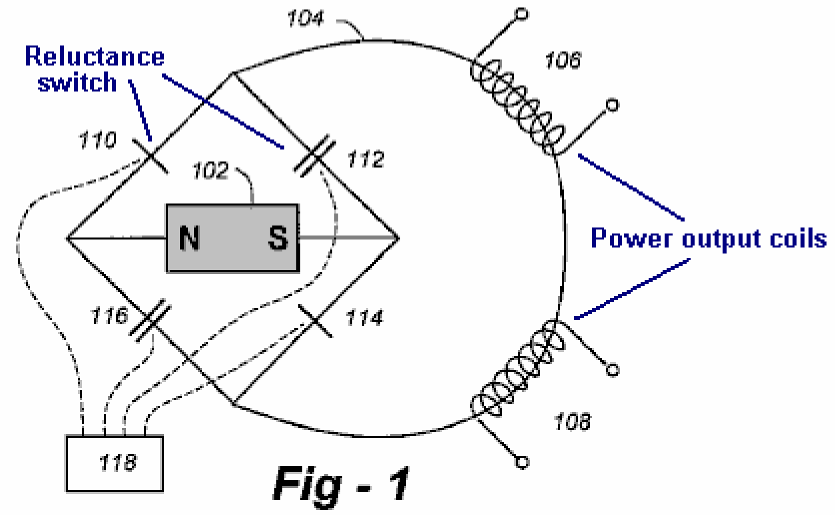

Fig - 1

Fig.1 is a schematic diagram of a magnetic circuit according to the invention utilizing a motionless flux switch. The circuit includes the following components: a permanent magnet 102, single flux path 104, conducting coils 106, 108, and four reluctance switches 110, 112, 114, 116. Under the control of unit 118, reluctance switches 110, 114 open (increasing reluctance), while switches 112, 116 close (decreasing reluctance). Reluctance switches 110, 114 then close, while switches 112, 116 open, and so on. This 2x2 opening and closing cycle repeats and, as it does, the magnetic flux from stationary permanent magnet 102 is reversed in polarity through single flux path 104, causing electricity to be generated in conducting coils 106, 108.

An efficient shape of permanent magnet 102 is a "C" in which the poles are in close proximity to one another and engage with the flux switch. The single flux is carried by a magnetisable member 100, also in a "C" shape with ends that are in close proximity to one another and also engage with the flux switch. In this, and in other embodiments, the 2x2 switching cycle is carried out simultaneously. As such, control circuit 118 is preferably implemented with a crystal-controlled clock feeding digital counters, flip-flops, gate packages, or the like, to adjust rise time, fall time, ringing and other parasitic effects. The output stage of the control circuit may use FET (Field-Effect Transistor switches) to route analog or digital waveforms to the reluctance switches as required.

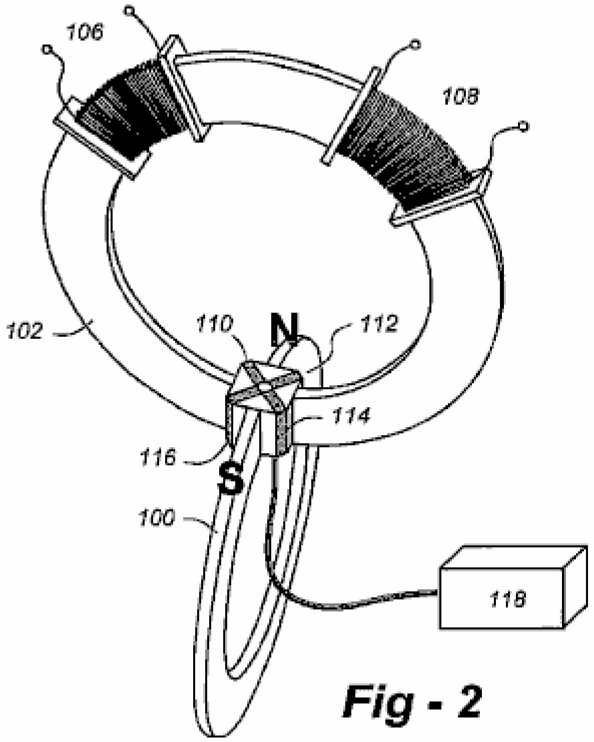

Fig - 2

Fig.2 is a perspective of one possible physical embodiment of the apparatus using the components of Fig.1, showing their relative positions to one another. Reluctance switches 110, 112, 114, 116 may be implemented differently, as described below, but will usually occupy the same relative position within the apparatus.

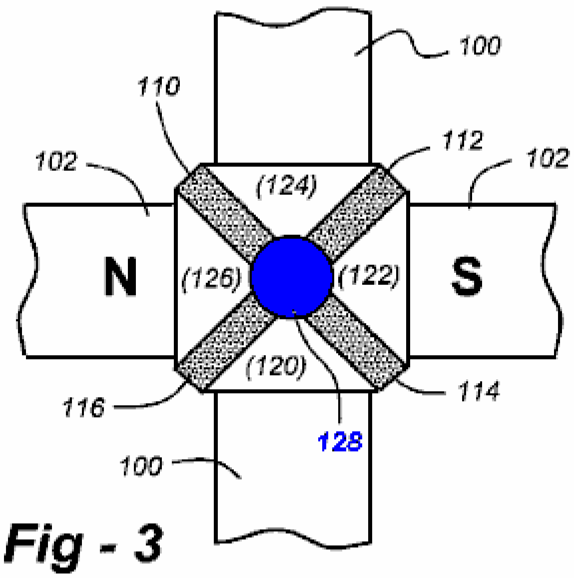

Fig - 3

Fig.3 is a detail drawing of the motionless flux switch. Connecting segments 120, 122, 124, 126 must be made of a high-permeability ferromagnetic material. The central volume 128 may be a through-hole, providing an air gap, or it may be filled with glass, ceramic or other low-permeability material. A super-conductor or other structure exhibiting the Meissner effect may alternatively be used.

In the embodiment depicted in Fig.2 and Fig.3, reluctance switches 110, 112, 114, 116 are implemented with a solid-state structure facilitating motionless operation. The currently preferred motionless reluctance switch is described by Toshiyuki Ueno & Toshiro Higuchi, in the paper "Investigation on Dynamic Properties of Magnetic Flux Control Device composed of Lamination of Magnetostrictive Material Piezoelectric Material," The University of Tokyo 2004, the entirety of which is incorporated herein by reference. As shown in Fig.4, this switch is made of a laminate of a GMM (Giant Magnetostrictive Material 42), a TbDyFe alloy, bonded on both sides by a PZT (Piezoelectric) material 44, 46 to which electricity is applied. The application of electricity to the PZT creates strain on the GMM, which causes its reluctance to increase.

Fig - 4

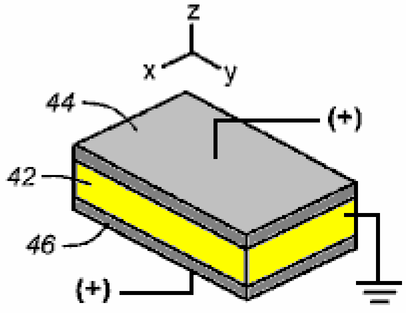

Other arrangements are applicable, including those disclosed in pending U.S. Patent Application Serial no. 2006/0012453, the entire content of which is incorporated herein by reference. These switches disclosed in this reference are based upon the magnetoelectric (ME) effects of liquid crystal materials in the form of magnetorestrictive and piezoelectric effects. The properties of ME materials are described, for example, in Ryu et al, "Magnetoelectric Effect in Composites of Magnetorestrictive and Piezoelectric Materials," Journal of Electroceramics, Vol. 8, 107-119

Filipov et al, "Magnetoelectric Effects at Piezoresonance in Ferromagnetic-Ferroelectric Layered Composites," Abstract, American Physical Society Meeting (March 2003) and Chang et al., "Magneto-band of Stacked Nanographite Ribbons," Abstract, American Physical Society Meeting (March 2003). The entire content of each of these papers are also incorporated herein.

Further alternatives include materials that may sequentially heated and allowed to cool (or cooled and allowed to warm up or actively heated and cooled) above and below the Currie temperature, thereby modulating reluctance. Gadolinium is a candidate since its Currie point is near room temperature. High-temperature superconductors are other candidates, with the material being cooled in an insulated chamber at a temperature substantially at or near the Currie point. Microwave or other energy sources may be used in conjunction with the control unit to effectuate this switching. Depending upon how rigidly the switches are contained, further expansion-limiting `yokes' may or may not be necessary around the block best seen in Fig.4.

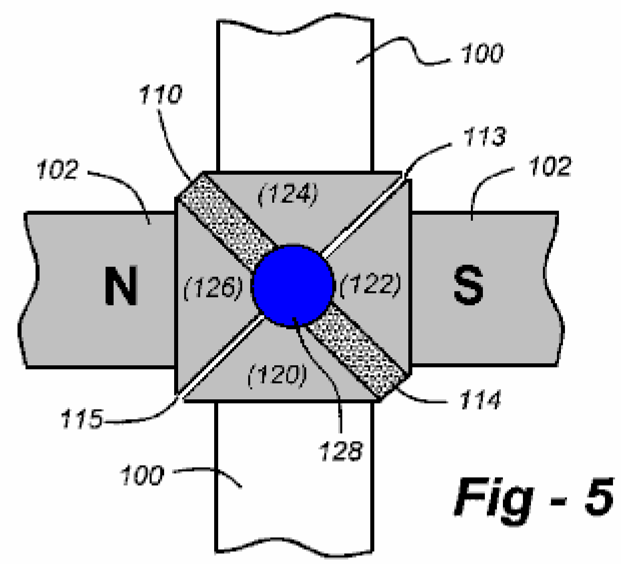

Fig - 5

Fig.5 is a detail drawing of an alternative motionless flux switch according to the invention which utilizes gaps of air or other materials. This embodiment uses two electrically operated reluctance switches 110, 114, and two gaps 113, 115, such that when the switches are activated in a prescribed manner, the flux from the magnet 102 is blocked along the switch segments containing the switches and forced through the gap-containing segments, thereby reversing the flux through the magnetisable member 100. Upon activation of the two reluctance switches 110, 114, the flux, seeking a path of significantly lower reluctance, flips back to the original path containing the (non deactivated) reluctance switches, thereby reversing the flux through the member 100. Note that the flux switches may also be electromagnetic to saturate local regions of the switch such that reluctance increases to that of air (or gap material), creating a virtual gap as described by Konrad and Brudny in the Background of the Invention.

More particularly, flux switching apparatus according to this embodiment uses a permanent magnet having a north pole `N' and a south pole `S' in opposing relation across a gap defining a volume. A magnetisable member with ends `A' and 'B' is supported in opposing relation across a gap sharing the volume, and a flux switch comprises a stationary block in the volume having four sides, 1-4, with two opposing sides interfaced to N and S, respectively and with the other two opposing sides being interfaced to A and B, respectively. The block is composed of a magnetisable material segmented by two electrically operated magnetic flux switches and two gaps filled with air or other material(s). A control unit in electrical communication with the flux switches is operative to:

a) passively allow a default flux path through sides 1-2 and 3-4, then
b) actively establish a flux path through sides 2-3 and 1-4, and
c) repeat a) and b) on a sequential basis.

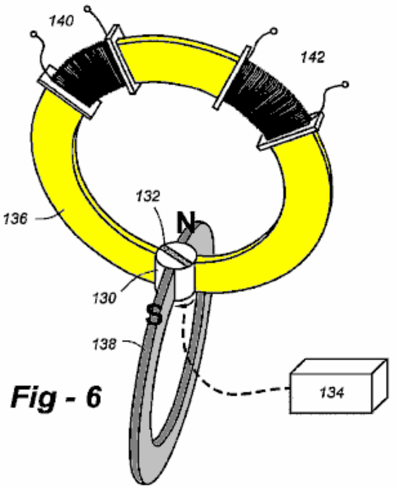

Fig - 6

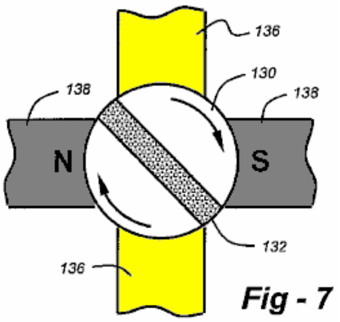

Fig - 7

As an alternative to a motionless flux switch, a rotary flux switch may be used to implement the 2x2 alternating sequence. Referring to Fig.6 and Fig.7, cylinder 130 with flux gap 132 is rotated by a motive means 134. This causes the halves of cylinder 130 to provide two concurrent and separate magnetic flux bridges (i.e., a "closed" reluctance switch condition), in which a given end of magnetisable member 136 is paired up with one of the poles of stationary permanent magnet 138. Simultaneously, the other end of single flux path carrier 136 is paired up with the opposite pole of stationary permanent magnet 138.

Fig.7 is a detail view of the cylinder. Each 90° rotation of the cylinder causes the first flux bridges to be broken (an "open" reluctance switches condition) and a second set of flux bridges to be created in which the given end of member 136 is then bridged with the opposite pole of stationary permanent magnet 138. A full rotation of cylinder 130 causes four such reversals. Each flux reversal within single flux path 2 causes an electric current to be induced in conducting coil(s) 140, 142. In this embodiment, it is important to keep a precise, consistent spacing between each of the "halves" of (rotating) cylinder 130 in relation to the poles of permanent magnet 138 and the ends of flux path carrier 136 as the magnetic flux bridges are provided by the cylinder 130 as it rotates.

Rotating cylinder 130 is made of high magnetic permeability material which is divided completely by the flux gap 132. A preferred material is a nanocrystalline material such as FINEMET® made by Hitachi. The flux gap 132 may be air, glass, ceramic, or any material exhibiting low magnetic permeability. A superconductor or other structure exhibiting the Meissner effect may alternatively be used.

An efficient shape of magnetisable member 136 is a "C" in which its opposing ends are curved with a same radius as cylinder 130 and are in the closest possible proximity with rotating cylinder 130. Permanent magnet 138 is also preferably C-shaped in which the opposing poles are curved with a same radius as cylinder 130 and are in the closest possible proximity with rotating cylinder 130. Manufacturing and assembly considerations may dictate other shapes.

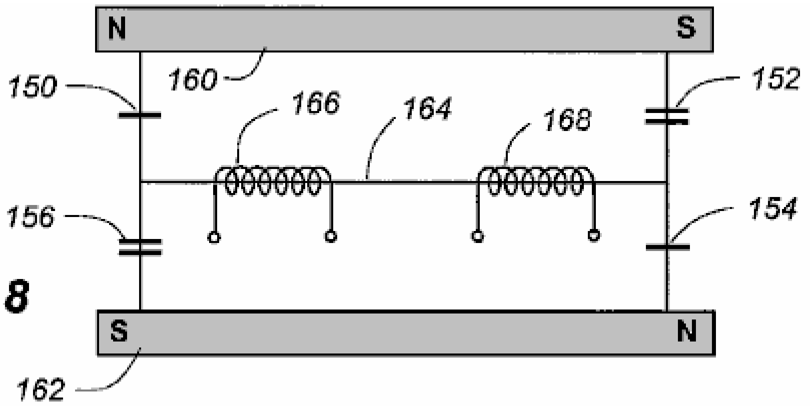

Fig - 8

While the embodiments described thus far utilize a single permanent magnet, other embodiments are possible according to the invention utilizing a plurality of permanent magnets while nonetheless generating a single flux path. Fig.8 depicts a circuit utilizing two permanent magnets and a single flux path. Fig.9 shows one possible physical embodiment of the apparatus based upon the components of Fig.8, including a reluctance switch control unit 158.

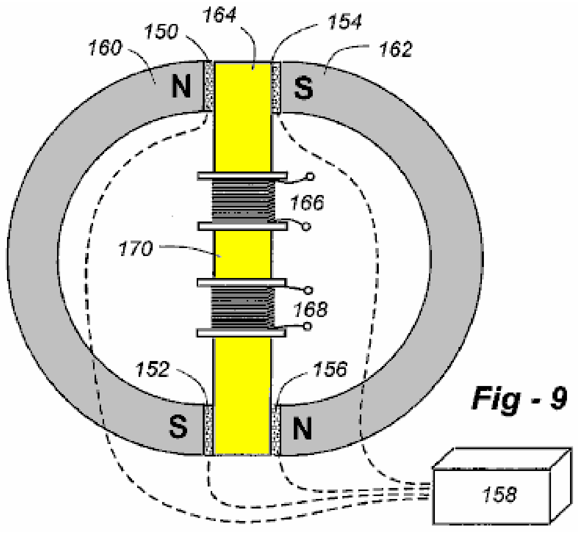

Fig - 9

Under the control of unit 158, reluctance switches 150, 152 open (increasing reluctance), while switches 154, 156 close (decreasing reluctance). Reluctance switches 150, 152 then close, while switches 154, 156 open, and so on. This 2x2 opening and closing cycle repeats and, as it does, the magnetic flux from stationary permanent magnets 160, 162 is reversed in polarity through the magnetisable member, causing electricity to be generated in conducting coils 166, 168.

In the preferred implementation of this embodiment, the magnets are arranged with their N and S poles reversed. The magnetisable member is disposed between the two magnets, and there are four flux switches, SW1-SW4, two between each end of the member and the poles of each magnet. The reluctance switches are implemented with the structures described above with reference to Figs. 1 to 3.

For added particularity, assume the first magnet has north and south poles, N1 and S1, the second magnet has north and south poles, N2 and S2 and the member has two ends A and B. Assuming SW1 is situated between N1 and A, SW2 is between A and S2, SW3 is between N2 and B, and SW4 is between B and S1, the control circuitry operative to activate SW1 and SW4, then activate SW2 and SW3, and repeat this process on a sequential basis. As with the other embodiments described herein, for reasons of efficiency, the switching is carried out simultaneously.

In all of the embodiments described herein the material used for the permanent magnet(s) may be either a magnetic assembly or a single magnetized unit. Preferred materials are ceramic ferrite magnets (Fe_20_3), samarium cobalt ($SmCO_5$), or combinations of iron, neodymium, and boron. The single flux path is carried by a material having a high magnetic permeability and constructed to minimize eddy currents. Such material may be a laminated iron or steel assembly or ferrite core such as used in transformers. A preferred material is a nanocrystalline material such as FINEMET®. The conducting coil or coils are wound around the material carrying the single flux path as many turns as required to meet the voltage, current or power objectives. Ordinary, standard, insulated, copper magnet wire (motor wire) is sufficient and acceptable. Superconducting materials may also be used. At least some of the electricity induced in the conducting coils may be fed back into the switch control unit. In this mode of operation, starting pulses of electricity may be provided from a chemical or solar battery, as required.

Fig - 10

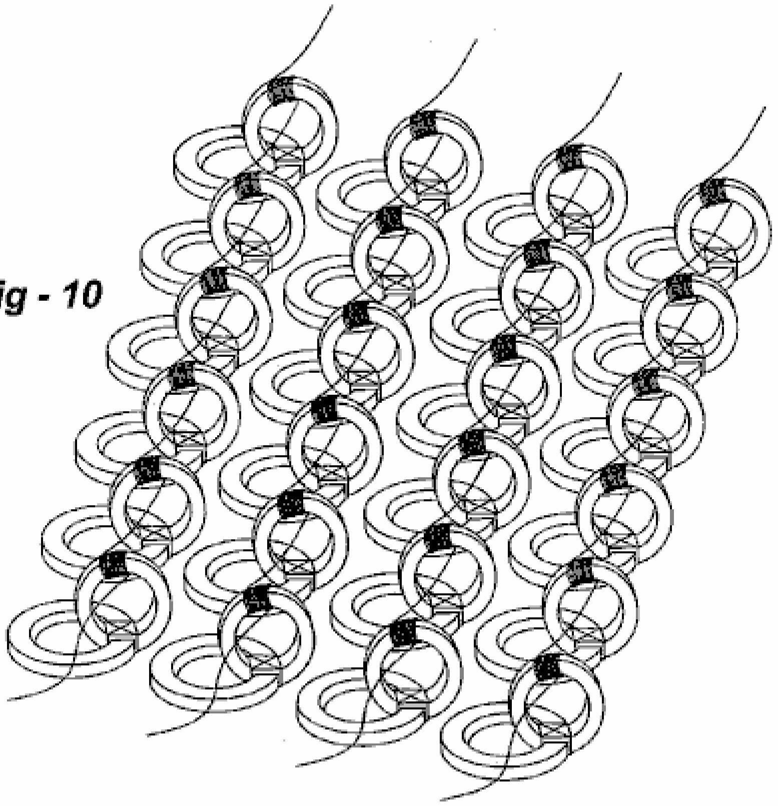

Although in the embodiments of Fig.2 and Fig.6 the magnet and flux-carrying materials are flat elements lying in orthogonal planes with flux-carrying material lying outside the volume described by the magnet, the flux path may be disposed `within' the magnet volume or configured at an angle. The physical scale of the elements may also be varied to take advantage of manufacturing techniques or other advantages. Fig.10, for example, shows an array of magnetic circuits, each having one or more coils that may be in series, parallel, or series-parallel combinations, depending upon voltage or current requirements. In each case the magnets may be placed or fabricated using techniques common to the microelectronics industry. If mechanical flux switches are used they may be fabricated using MEMs-type techniques. If motionless switches are used, the materials may be placed and/or deposited. The paths are preferably wound in advance then picked and placed into position as shown. The embodiment shown in Fig.9 is also amenable to miniaturization and replication.

CLAIMS

1. An energy generator, comprising: at least one permanent magnet generating flux; a magnetisable member; an electrical conductor wound around the member; and a plurality of magnetic flux switches operative to sequentially reverse the flux from the magnet through the member, thereby inducing electricity in the electrical conductor.

2. The energy generator of claim 1, comprising: first and second loops of magnetisable material; the first loop having four segments in order A, 1, B, 2; the second loop having four segments in order C, 3, D, 4; the magnetisable member coupling segments 2 and 4; the permanent magnet coupling segments 1 and 3, such that the flux from the magnet flows through segments A, B, C, D and the magnetisable member; four magnetic flux switches, each controlling the flux through a respective one of the segments A, B, C, D; and a controller operative to activate switches A-D and B-C in an alternating sequence, thereby reversing the flux through the segment and inducing electricity in the electrical conductor.

3. The energy generator of claim 2, wherein the loops and magnetisable member are composed of a nanocrystalline material exhibiting a substantially square BH intrinsic curve.

4. The energy generator of claim 2, wherein each magnetic flux switch is operative to add flux to the segment it controls, thereby magnetically saturating that segment when activated.

5. The energy generator of claim 2, wherein: each segment has an aperture formed therethrough; and each magnetic flux switch is implemented as a coil of wire wound through one of the apertures.

6. The energy generator of claim 2, wherein the controller is at least initially operative to activate the switches with electrical current spikes.

7. The energy generator of claim 2, wherein the first and second loops are toroids.

8. The energy generator of claim 2, wherein the first and second loops are spaced apart from one another, with A opposing C, 1 opposing 3, B opposing D and 2 opposing 4.

9. The energy generator of claim 2, wherein the first and second loops intersect to form the magnetisable member.

10. The energy generator of claim 2, wherein the flux flowing through each segment A, B, C, D is substantially half of that flowing through the magnetisable member prior to switch activation.

The Energy Conversion Device of William McDavid junior

US Patent 6,800,955 5th Oct. 2004 Inventor: William McDavid jnr.

Fluid-powered energy conversion device

Note: The wording of this patent has been altered to make it easier to understand. An unaltered copy can be downloaded from www.freepatentsonline.com. In this patent, William relates sections of his design according to the direction of flow through the housing and so he calls the first section the "downstream" chamber and the following chamber as the "upstream" chamber. Although water could be used, this patent essentially describes a high-efficiency wind-powered generator. For dimensions: one inch = 25.4 mm.

Abstract:

A fluid-powered energy conversion device which converts energy in a moving fluid into mechanical energy. A rigid cylindrical frame of toroidal baffles forms an "upstream" annular or ring-shaped chamber and a "downstream" annular chamber, each of the chambers having open sides to allow the entry of the fluid. The toroidal baffles create an upstream **drive** vortex in an upstream central vortex chamber, and a downstream **extraction** vortex rotating in the opposite direction in a downstream central vortex chamber. A set of hinged louvers surround the vortex chambers and these allow the fluid to enter each chamber only in the direction of vortex rotation, and prevent the fluid from exiting through the sides of the device. The driving vortex passes through, and rotates, a turbine positioned in a central aperture between the two chambers. The turbine blades are rotated by the rotational momentum of the driving fluid vortex, plus the lift generated by each turbine blade, plus the additional momentum imparted by the vortex reversal.

US Patent References:

McDavid, Jr. – US 6,710,469
McDavid, Jr. – US 6,518,680
Walters – US 5,664,418

Description:

BACKGROUND OF THE INVENTION

1. Technical Field of the Invention

The present invention relates generally to electrical generation and energy conversion devices, and more particularly to a fluid-powered energy conversion device which converts the energy of wind or flowing water into mechanical or electrical energy.

2. Description of Related Art

The use of wind or flowing water to provide power for various uses dates back many centuries. In modern times, wind and water have been used to generate electricity. Hydroelectric generating plants have been used to generate large quantities of electrical energy for widespread distribution. However, this requires major permanent environmental changes to the areas where dams are built and reservoirs rise. Wind-powered devices, in general, have been used to perform mechanical work, or to generate electricity, only on a limited scale. With the ever increasing demand for additional, or alternative energy sources, all possible sources are being given more scrutiny. This is particularly true for sources which are non-polluting and inexhaustible. Free-flowing hydro-electric and wind-powered systems provide such sources, and the capturing of increased energy from wind and water has received much consideration.

However, commercial hydro-electric and wind-powered electrical generation devices which are currently in use have several disadvantages. Wind-powered devices, in particular, are expensive, inefficient, dangerous, noisy, and unpleasant to be around. To capture a large volume of wind, existing wind-powered devices are very large. As a result, they cannot be distributed throughout population centres, but must be installed some distance away. Then, like dams with hydro-electric generators, the electrical energy they generate must be transmitted, at considerable cost and with considerable energy loss, to the population centres where the energy is needed.

It would be desirable to distribute smaller water-powered and wind-powered units throughout the population centres. For example, it would be desirable to have a wind-powered unit for each building structure, thus distributing the generating capacity over the entire area, and making the energy supply less vulnerable to local events such as storms or earthquakes. Such distributed generation would also solve the most common and valid objection to wind power, namely, that the wind does not blow all the time. In a large geographical area, however, wind is almost always blowing somewhere. Therefore, with wind-powered generators which are distributed throughout the area, power could be generated in the areas where the wind is blowing, and then transmitted to the rest of the power grid. However, with existing technology, smaller units suitable for distributing throughout a population area are not efficient enough to provide a sufficient amount of energy to power a structure such as a house or office building. In addition, such units are visually obtrusive and noisy, making them unsuitable for use in residential or other highly populated settings.

Existing wind-powered electrical generation devices commonly utilise a propeller mounted on the horizontal shaft of a generator which, in turn, is mounted at the top of a tower. This is an inefficient design because energy is extracted from the wind by reducing the wind velocity as it passes through the propeller. This creates a pocket of slow-moving air cantered behind the propeller, which the ambient wind blows around. Therefore, only the outer portion of the propeller blades use the wind efficiently.

To counter this effect, modern windmill designs utilise extremely long propeller blades. The use of such massive blades, however, has its own disadvantages. Firstly, the propellers are known to kill or injure thousands of large birds each year. Secondly, the massive blades can be dangerous if the device fails structurally and the propeller breaks loose. In this case, the propeller can fly a considerable distance and cause serious damage or injury to anything or anyone in its path. Thirdly, the propeller design contains an inherent gravitational imbalance. The rising blades on one side of the propeller's hub are opposing gravity, while the descending blades on the other side of the hub are falling with gravity. This imbalance creates a great deal of vibration and stress on the device. Consequently, the device must be structurally enhanced, at great expense, to withstand the vibration and stress, and thus avoid frequent maintenance and/or replacement.

It would therefore be advantageous to have a fluid-powered energy conversion device which overcomes the shortcomings of existing devices. Such a device could utilise wind energy or the energy of flowing water to provide mechanical energy or electrical energy. The present invention provides such a device.

SUMMARY OF THE INVENTION

One aspect, the present invention is a fluid-powered energy-conversion device for converting energy in a moving fluid into mechanical energy. The device includes a rigid cylindrical frame which has an “upstream” annular (ring-shaped) chamber and a “downstream” annular chamber. Each of the chambers has sides which are open to allow entry of the moving fluid. A first set of baffles are mounted longitudinally in the upstream chamber, and these create a driving vortex which rotates in a first direction when the moving fluid enters the upstream chamber through the upstream chamber's open sides. A set of hinged louvers are positioned in the openings between these baffles, creating a central vortex chamber centered on the longitudinal axis of the device.

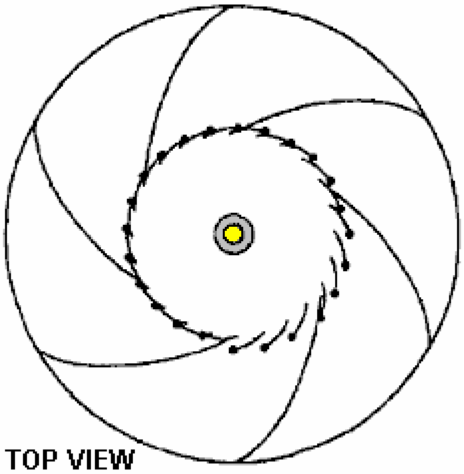

TOP VIEW

This first set of louvers permits entry of the moving fluid into the upstream central vortex chamber only when the fluid is rotating in the first direction. They also prevent the fluid from exiting from the upstream central vortex chamber through the sides of the device. The device also includes a floor of the upstream annular chamber which slopes upwards towards the downstream chamber as the floor approaches the central longitudinal axis of the device.

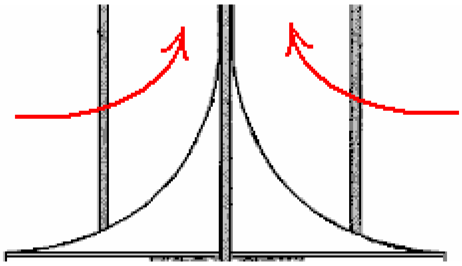

This sloping floor causes the drive vortex to flow "downstream" (upwards for air) through the upstream central vortex chamber and pass through a central aperture located between the upstream annular chamber and the downstream annular chamber. A longitudinal drive shaft is mounted centrally in the central aperture, and a turbine is mounted on the drive shaft in the central aperture. The turbine is rotated by the drive vortex as the drive vortex passes through the central aperture.

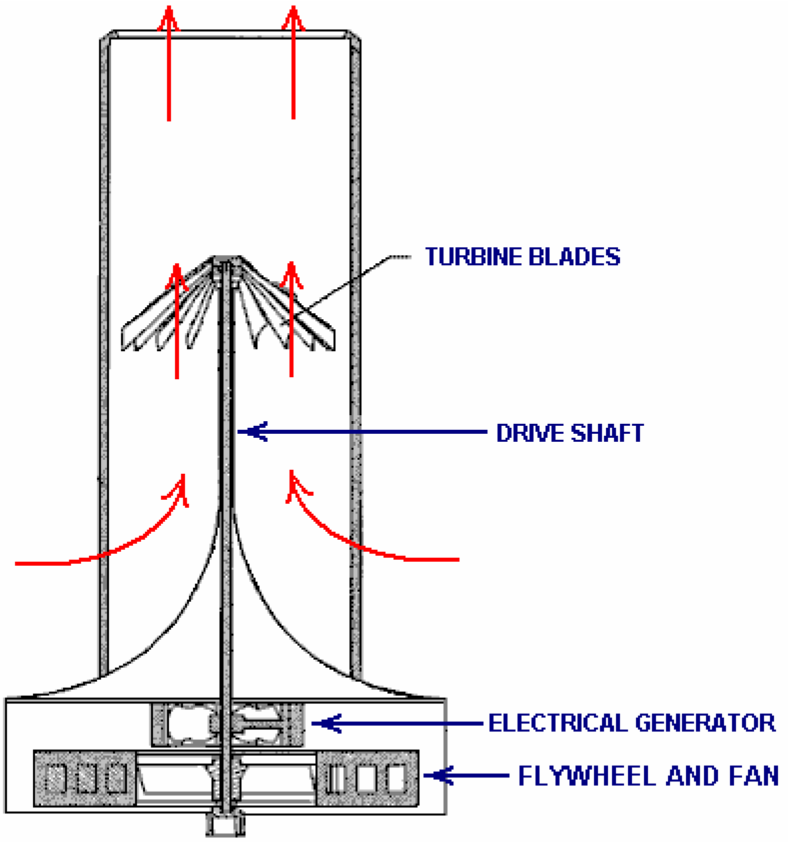

The device may also include a second set of baffles longitudinally mounted in the "downstream" (upper for air) chamber which operate to create an extraction vortex which rotates in the opposite direction when the moving fluid enters the downstream chamber through the downstream chamber's open sides. Additionally, a second set of hinged louvers may be positioned in the openings between the second set of baffles, encircling a downstream central vortex chamber. The second set of louvers permit entry of the moving fluid into the downstream central vortex chamber only when the fluid is rotating in the direction opposite to the direction of flow in the "upstream" camber. These louvers also prevent the fluid from exiting the downstream central vortex chamber through the sides of the device. In this manner, the turbine is rotated by the drive vortex as the drive vortex passes through the turbine and reverses direction to match the direction of the extraction vortex.

For high-wind conditions or when powered by water flow, the driving vortex and extraction vortex may rotate in the same direction. The first set of hinged louvers form the upstream central vortex chamber, and the second set of hinged louvers form the downstream central vortex chamber. The first set of louvers permit entry of the wind or water into the upstream central vortex chamber only when the fluid is rotating in the first direction.

BRIEF DESCRIPTION OF THE DRAWINGS

The invention will be better understood and its numerous objects and advantages will become more apparent to those skilled in the art by reference to the following drawings, in conjunction with the accompanying specification, in which:

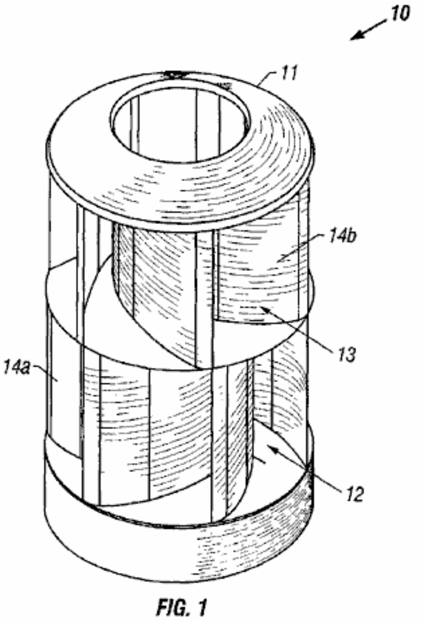

FIG. 1

FIG.1 is a perspective view of a first embodiment of the present invention that converts wind energy to mechanical or electrical energy;

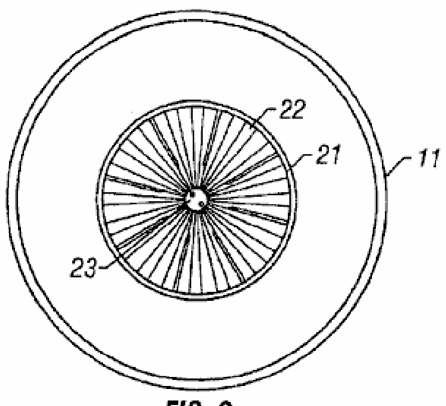

FIG. 2

FIG.2 is a top plan view of the embodiment of Fig.1

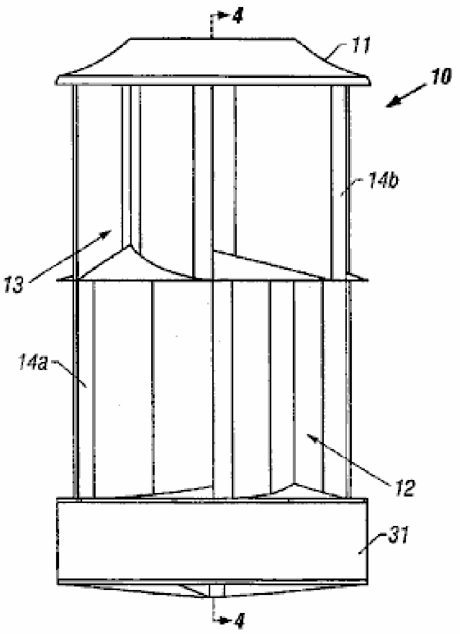

FIG. 3

FIG.3 is a side elevational view of the embodiment of Fig.1

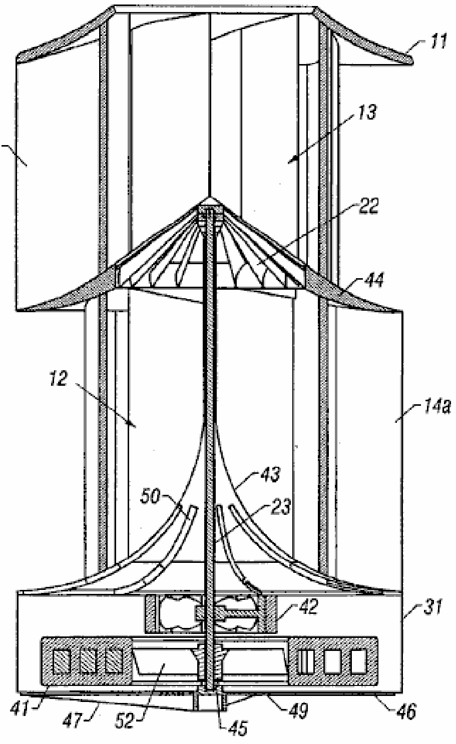

FIG. 4

FIG.4 is a cross-sectional view of the embodiment of Fig.1 taken along line **4 — 4** of Fig.3 with an electrical generator installed to produce electrical energy;

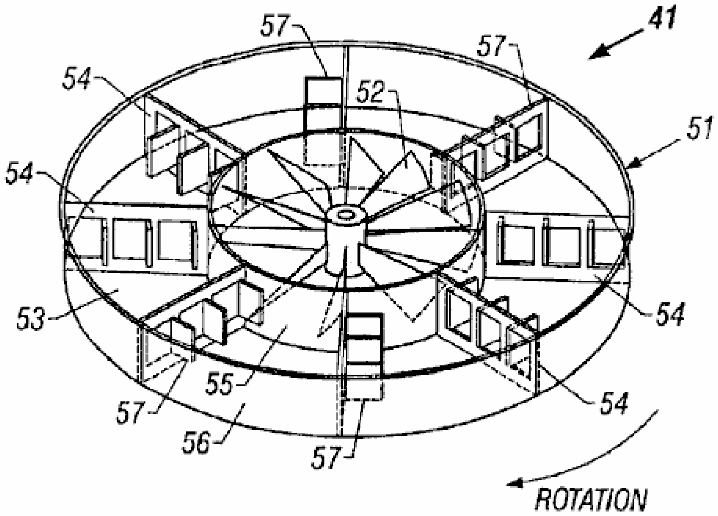

FIG. 5

FIG.5 is a perspective view of a fluid-filled flywheel suitable for use with the present invention;

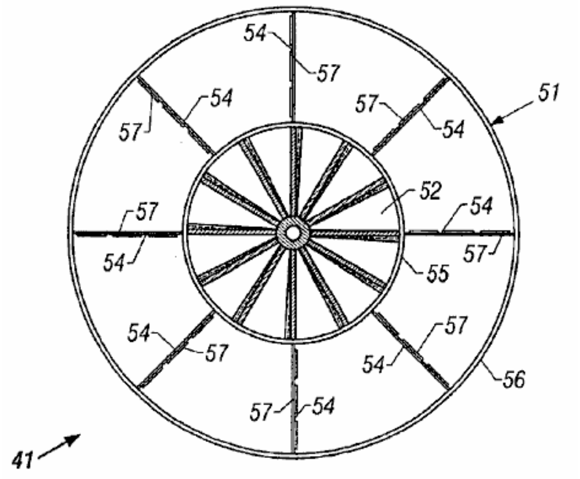

FIG. 6

FIG.6 is a top plan view of the fluid-filled flywheel of Fig.5

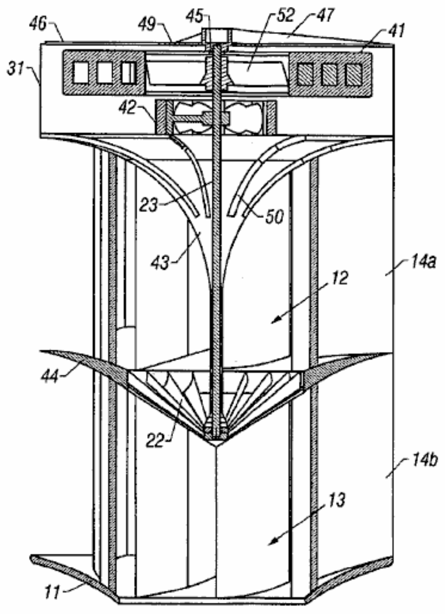

FIG. 7

FIG.7 is a cross-sectional view of an embodiment of the present invention that converts the energy of flowing **water** to electrical energy;

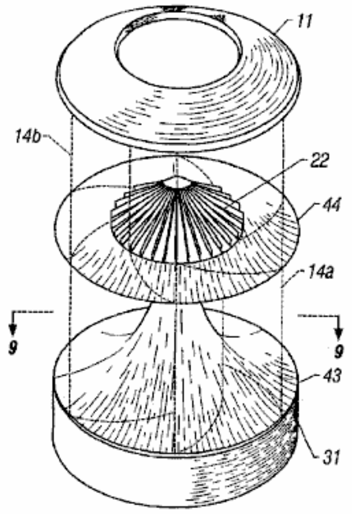

FIG. 8

FIG.8 is a perspective view of the embodiment of Fig.1 with the longitudinal baffles drawn in phantom so that the annular central divider (mid-deck) and turbine can be seen

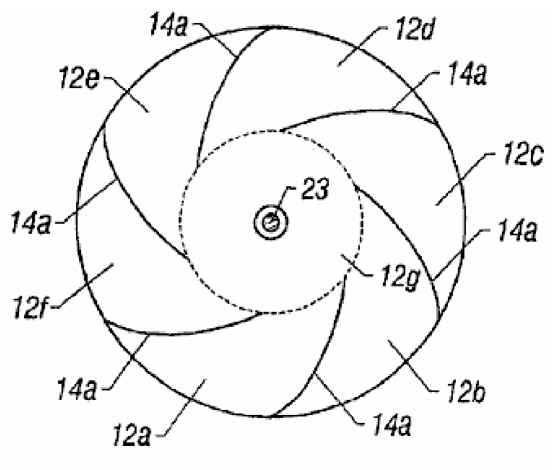

FIG. 9

FIG.9 is a horizontal cross-sectional view of the embodiment of Fig.1 taken along line **9 — 9** of Fig.8

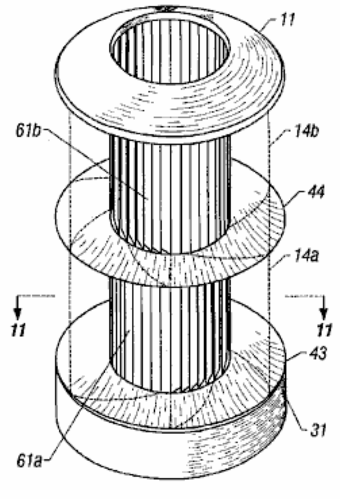

FIG. 10

FIG.10 is a perspective view of a second embodiment of the present invention that converts wind energy to mechanical or electrical energy, with the longitudinal baffles drawn in phantom so that a set of hinged longitudinal louvers can be seen; and

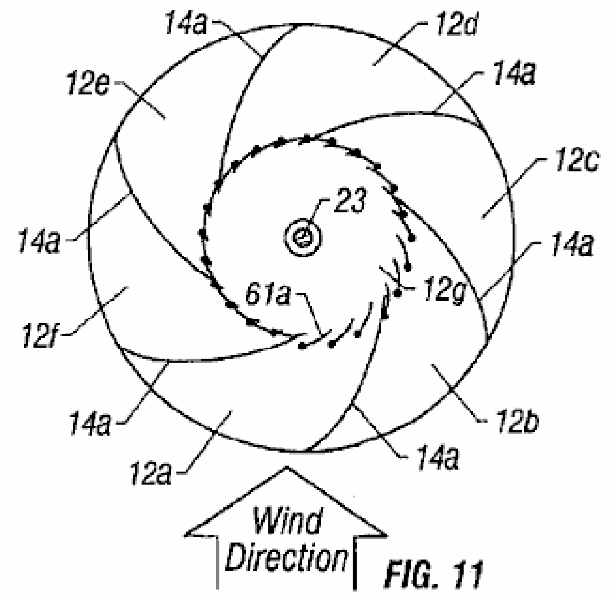

FIG. 11

FIG.11 is a horizontal cross-sectional view of the embodiment of Fig.10 taken along line **11 — 11** .

In the drawings, like or similar elements are designated with identical reference numerals throughout the various views, and the various elements shown are not necessarily drawn to scale.

DETAILED DESCRIPTION OF EMBODIMENTS

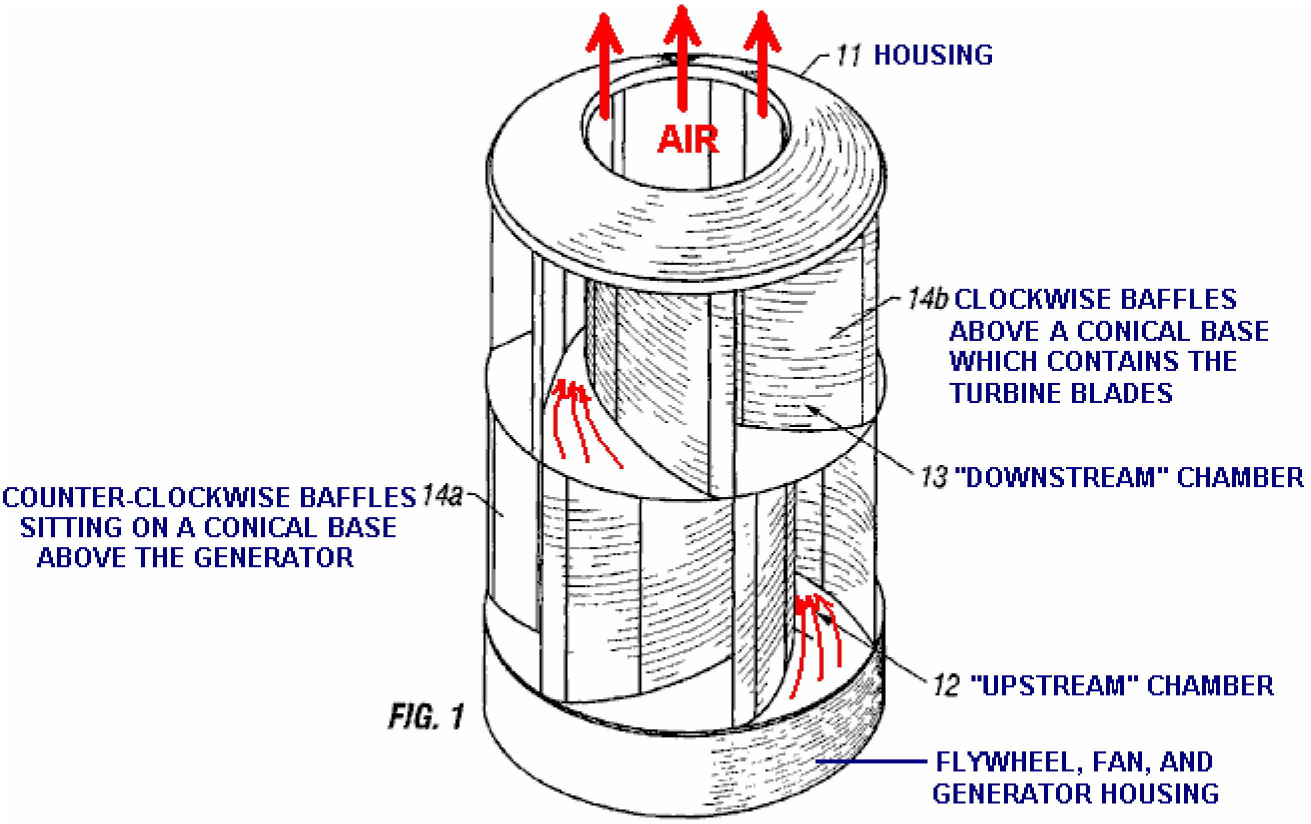

FIG. 1

Fig.1 is a perspective view of an embodiment of the present invention which converts wind energy to mechanical or electrical energy. The energy conversion device **10** includes a stationary cowling **11** surrounding an upstream (lower) ring-shaped or doughnut-shaped chamber **12** and a downstream (upper) ring-shaped chamber **13**. The cowling may be constructed of any suitable rigid material such as wood, plastic, metal, or similar. The cowling may be constructed from a transparent material, making the device visually unobtrusive. In the preferred embodiment of the present invention, the cowling is cylindrical and is constructed of a high-grade, ultraviolet-protected plastic.

The cowling **11** includes a set of longitudinal baffles which are curved and arranged in a toroidal pattern. Upstream baffles **14a** are mounted in the upstream annular chamber **12**, and downstream baffles **14b** are mounted in the downstream annular chamber **13**. In the preferred embodiment of the present invention, approximately six toroidal longitudinal baffles are mounted in each chamber. The baffles function to guide the wind into each chamber. The narrowing cross-sectional area between the baffles causes the air to accelerate as it moves toward the centre of the device, creating two high-velocity vortices (an upstream drive vortex and a downstream extraction vortex). Although the invention is described here primarily as a vertically-oriented cylinder, it should be understood that the device may be installed in other positions, such as a horizontal orientation, which results in the device having an upstream annular chamber and a downstream annular chamber which are at the same height. Alternatively, as noted below in connection with **Fig.7**, the device may be inverted when used in water since water vortices move more readily downwards rather than upwards.

In the embodiment illustrated in **Fig.1**, in which low-speed wind is the input energy source, the upstream baffles **14a** and the downstream baffles **14b** are curved in opposite directions. The baffles therefore create two high-velocity vortices which rotate in opposite directions. As described below in connection with **Fig.4** , the direction of the vortex flow is reversed in a turbine located between the upstream annular chamber **12** and the downstream annular chamber **13**, thereby adding additional rotational power to the turbine. In the hydro-electrical embodiment in which flowing water is the input energy source, and in high-speed wind conditions such as when the device is mounted on a vehicle, the upstream baffles and the downstream baffles may be curved in the same direction. In those particular embodiments, therefore, the baffles create two high-velocity vortices which rotate in the same direction. The device may be converted from a low-wind device to a high-wind device by removing the counter-rotational downstream annular chamber **13** and replacing it with a downstream annular chamber which creates a vortex rotating in the same direction as the drive vortex.

In the preferred embodiment of the present invention, plastic mesh (not shown) may surround the entry and exit openings of the cowling **11** to prevent birds, animals, or debris from entering the device **10**. In addition, should the device fail structurally, any broken parts are contained by the mesh instead of flying out into the vicinity and causing damage or injury.

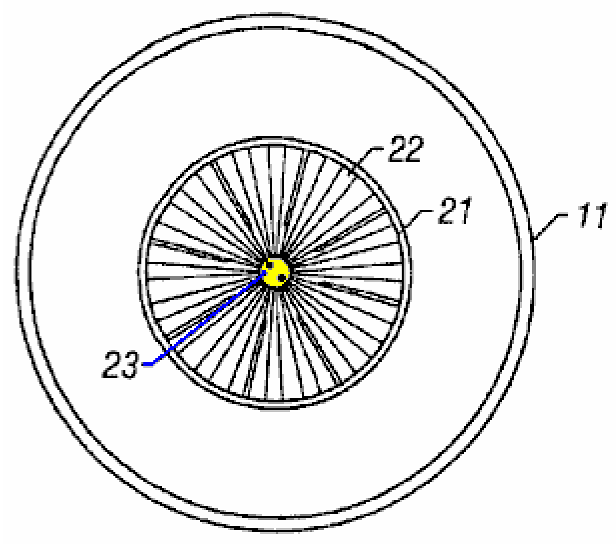

FIG. 2

Fig.2 is a top plan view of the embodiment of **Fig.1**. The top of the cowling **11** includes a central aperture **21** through which the air in the extraction vortex exits the device. In the preferred embodiment, the extraction vortex exits the device rotating in a counter-cyclonic direction (clockwise in the Northern Hemisphere) so that it dissipates rather than creating potentially damaging whirlwinds. The turbine **22** is visible through the aperture. The turbine rotates around a central drive shaft **23** .

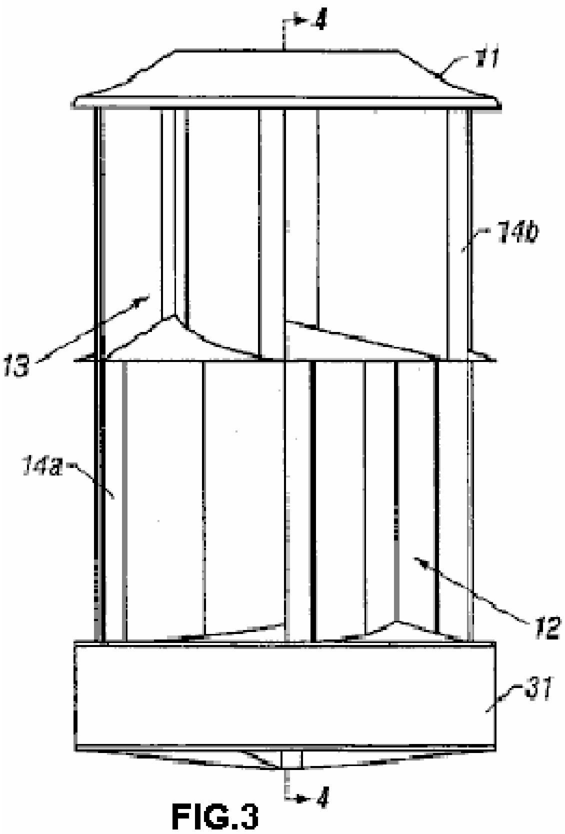

FIG.3

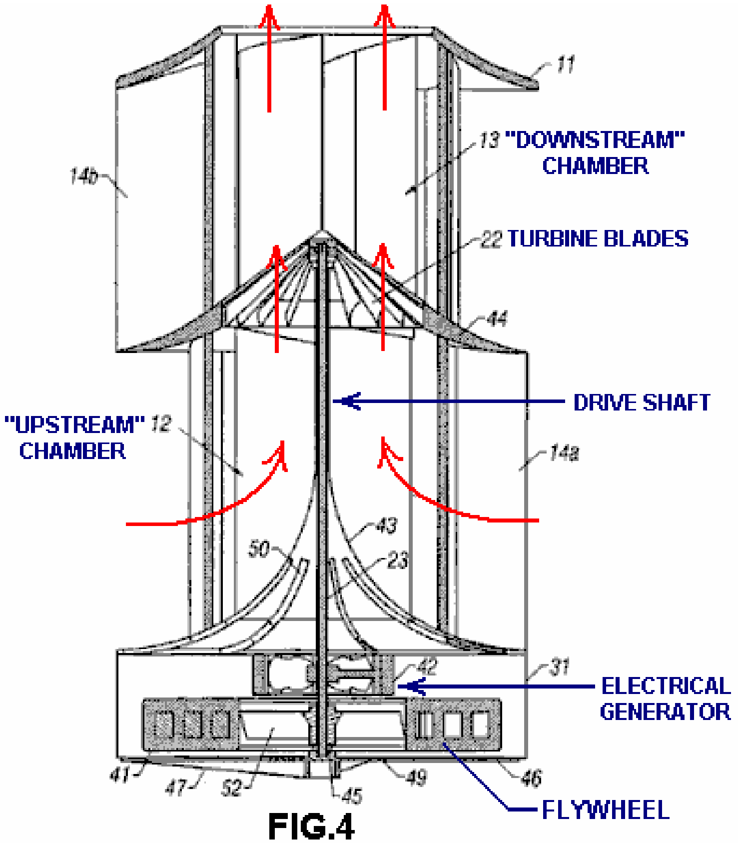

FIG.4

Fig.3 is a side-elevational view of the embodiment of **Fig.1** illustrating the profile of the cowling **11**, the upstream annular chamber **12**, the downstream annular chamber **13**, and the baffles **14a** and **14b**. The cowling may be mounted on a base **31** and the base **31** may also be used to enclose additional mechanical assemblies such as a flywheel and/or an electrical generator.

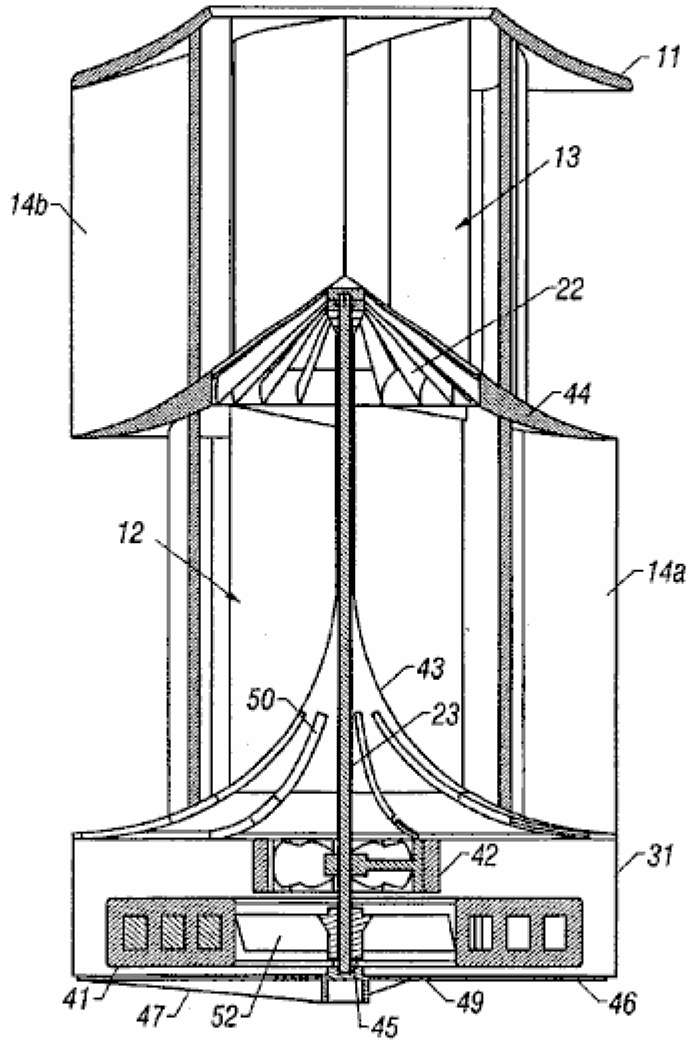

FIG. 4

Fig.4 is a cross-sectional view of the embodiment of **Fig.1** taken along line **4** — **4** of **Fig.3** with a flywheel **41** installed in the base **31** along with an electrical generator **42** to produce electricity. Ambient wind flows simultaneously into the upstream annular chamber **12** through upstream baffles **14a**, and into the downstream annular chamber **13** through the downstream baffles **14b** through the sides of the cowling **11**. The baffles guide the ambient wind towards the centre of the device **10**. A sloping parabolic floor (deck) **43** of the upstream annular chamber **12** causes the wind to flow downstream into the centrally mounted turbine **22** that rotates on the central drive shaft **23**. The device **10** produces power by guiding ambient wind flows into two high-velocity vortices arranged upstream and downstream of the turbine which converts the wind flows to mechanical energy by turning the drive shaft **23**. High-RPM and high-torque are produced by the turbine due to three primary factors:

(1) each blade of the turbine is shaped like a scoop which captures the rotational momentum of the drive vortex;

(2) each blade of the turbine has a cross-sectional shape of an airfoil that generates lift in the direction of rotation of the turbine; and

(3) in low wind conditions, the reversal of the direction of the vortex rotation adds additional force to the turbine in the direction of rotation.

The large flywheel **41** may be attached to the rotating turbine drive shaft **23**. In one embodiment, the flywheel may be a permanent magnet, surrounded by copper windings. The flywheel may serve both as an internal energy storage device due to its angular momentum, and as a dynamo for the generator **42** mounted under the deck **43** of the upstream annular chamber **12**. A solid-state electronic regulator (not shown) may be utilised to control the electrical current load. The regulator maintains a zero load until a preset rotational velocity (RPM) is reached. The load is then increased in order to generate electricity while maintaining the RPM of the turbine at a preselected level.

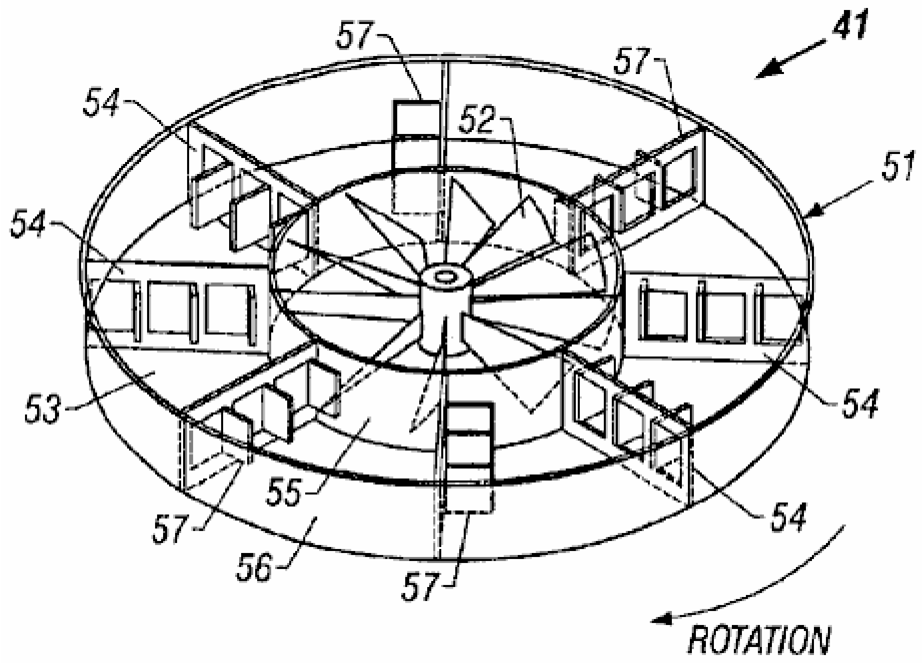

FIG. 5

In **Fig.5** is shown a perspective view of another embodiment of the flywheel **41**. In this embodiment, the flywheel (shown in phantom) includes a hollow disk-shaped shell **51** which is filled with a fluid such as water. The design shown also includes a cooling fan **52** in the hub of the flywheel which rotates with the drive shaft **23** and the flywheel to produce a flow of cooling air that is used to cool the adjacent generator **42** (**Fig.4** and **Fig.7**). The placement of the fan in the hub of the flywheel creates an annular chamber **53** whicht holds the fluid. Within the chamber, there is a set of radial bulkheads **54** extending from the interior wall **55** to the exterior wall **56** of the chamber. Each of the radial bulkheads includes hinged gates or hatches **57**. In the example version shown here, each radial bulkhead has three hinged gates.

During acceleration of the flywheel **41** , these gates **57** open in the opposite direction of rotation. This allows the fluid to flow through the radial bulkheads **54**, reducing start-up inertia. The fluid then slowly comes up to speed due to friction with the interior and exterior walls **55** and **56** of the annular chamber, and due to the motion of the radial bulkheads through the fluid. During deceleration of the flywheel, the gates close because of the forward momentum of the fluid. This creates solid radial bulkheads and causes the flywheel to perform as a solid flywheel. The angular momentum of the flywheel then helps to maintain the angular velocity of the drive shaft **23** when the input power of the wind drops off.

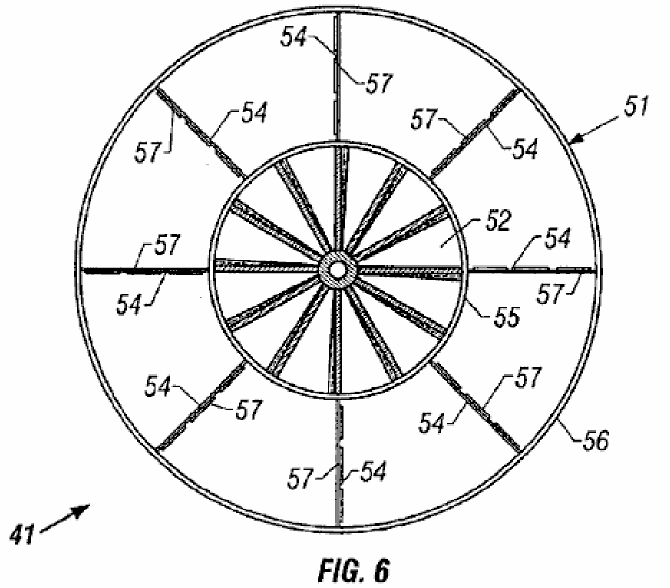

FIG. 6

Fig.6 is a top plan view of the fluid-filled flywheel **41** of **Fig.5** , showing the blades of the cooling fan **52** in the hub of the flywheel, the annular chamber **53**, the radial bulkheads **54**, and the gates **57** in the closed (decelerating) position.

Thus, the fluid-filled flywheel **41** is particularly well suited for use with this energy conversion device **10** of the present invention. The fluid-filled flywheel allows rapid spin-up of the drive shaft **23** by reducing the start-up inertia, but resists deceleration like a solid flywheel. These features can significantly boost the efficiency of a wind-powered or water-powered device that operates with varying input power levels. By simply inverting the flywheel, the fluid-filled flywheel can be used with systems that spin either clockwise or counter-clockwise. As an additional feature, shipping weight is greatly reduced because the fluid can be added at the point of use.

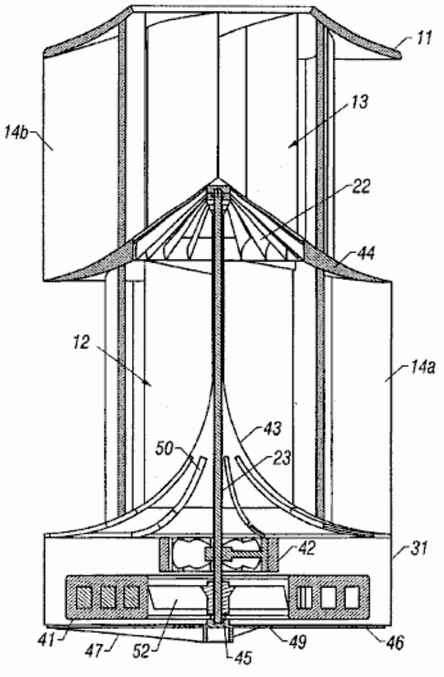

FIG. 4

Referring again to **Fig.4** , an annular central divider (mid-deck) **44** divides the upstream annular chamber **12** from the downstream annular chamber **13**. The top of the mid-deck slopes away from the turbine, causing the ambient wind entering the downstream annular chamber to flow away from the turbine. This creates an area of reduced air pressure on the downstream side of the turbine **22** that increases the flow of air from the upstream annular chamber **12** through the turbine. Each blade of the turbine **22** is a curved airfoil which receives rotational impetus from the rotation of the drive vortex, the reversal of the vortex direction, and aerodynamic lift that is generated by the airfoil in the direction of rotation of the turbine.

In the preferred embodiment of the present invention, the turbine **22** and flywheel **41** may be made of metal. Further, all metal parts may be coated with, for example, plastic, chrome, or paint to prevent corrosion. As discussed above, the flywheel may be a permanent magnet or may be a fluid-filled flywheel. All bearings such as bearing **45** may be magnetic-repulsion-levitation bearings so that there is no physical contact between the moving and stationary elements of the device. The base **31** may be mounted on a support plate **46** and/or a support brace **47**, depending on the structure on which the device is mounted and the orientation of the device.

The central drive shaft **23** may also drive the cooling fan **52** that draws cooling air through vents **49** in the support plate and directs the air through the generator **42**. The heated air may exit through louvers **50** in the parabolic deck **43** of the upstream annular chamber **12** where it then mixes with the driving airflow in the upstream annular chamber to defrost the interior of the device and the turbine **22**.

The device **10** may vary in its dimensions, depending upon the specific application for which it is utilised. For example, the dimensions of a wind-powered device that is mounted on the roof of a house may be between 40 inches and 48 inches in diameter, and between 60 inches and 78 inches in height. In this configuration, the turbine **22** has a diameter approximately one-half the diameter of the exterior of the cowling **11** (i.e. approximately 20 to 24 inches in diameter). Larger versions may be utilised for larger buildings such as factories or office buildings with increased economies of scale. For example, an office building may use a device that is 20 feet in diameter and 20 feet tall with a turbine that is 10 feet in diameter. A vehicle-mounted device (for example, for a passenger car), designed for high-wind conditions, may be about 24 inches in diameter and 6 inches in height. The generator and flywheel, if any, may be mounted inside the contour of the vehicle, or on a luggage rack. A small hydro-electric version of the device that is placed in a running stream or river may have similar dimensions to the vehicle-mounted device. In addition, since the outflow of the hydro-electric version is directed downward, a deflector may be utilised in shallow bodies of water to prevent erosion of the stream bed.

It should be noted that when the present invention is oriented vertically, the turbine **22**, the generator **42**, and the flywheel **41** rotate around a vertical axis. Therefore, the supporting structures are not subject to the vibration and stress produced by gravity effects in prior art devices in which propellers rotate around a horizontal axis. Moreover, exceptional wind-conversion efficiency is realized from the present invention as it diverts and accelerates the ambient wind flow into vortices that have several times the velocity of the ambient wind flow when they reach the turbine. Additionally, the acceleration of the air flow into the upstream and downstream annular chambers creates a low pressure area that pulls air into the device from an effective cross-sectional area that is greater than the physical cross-sectional area of the device. As a result, the present invention provides a new and improved wind-power conversion device which is quieter, safer, more efficient, and more cost effective than existing devices.

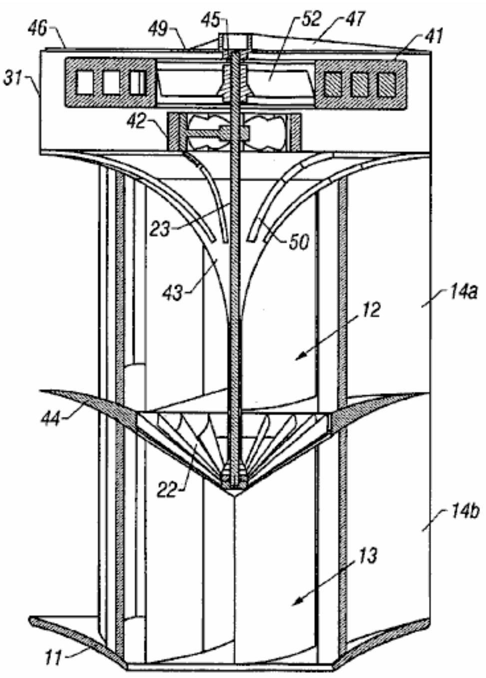

FIG. 7

Referring now to **Fig.7**, there is shown a cross-sectional view of a version of the present invention which converts the energy of flowing water to electrical energy (i.e. a hydro-electrical device). There are three key differences between the hydro-electrical embodiment from the low-wind-powered embodiment of **Figs. 1 to 4**. Firstly, the upstream baffles **14a** and the downstream baffles **14b** curve in the same direction. The baffles therefore create two high-velocity vortices which rotate in the same direction. This is a more efficient design when the fluid flowing through the device is an incompressible fluid such as water. Secondly, the device operates more efficiently when it is inverted and mounted vertically since water vortices move downward due to the force of gravity. The third difference is the ratio of the height of the device to the diameter of the device. As noted above, the hydro-electric embodiment of the device may have a height that is shorter when compared to its diameter, and may have a height that is equal to or less than its diameter.

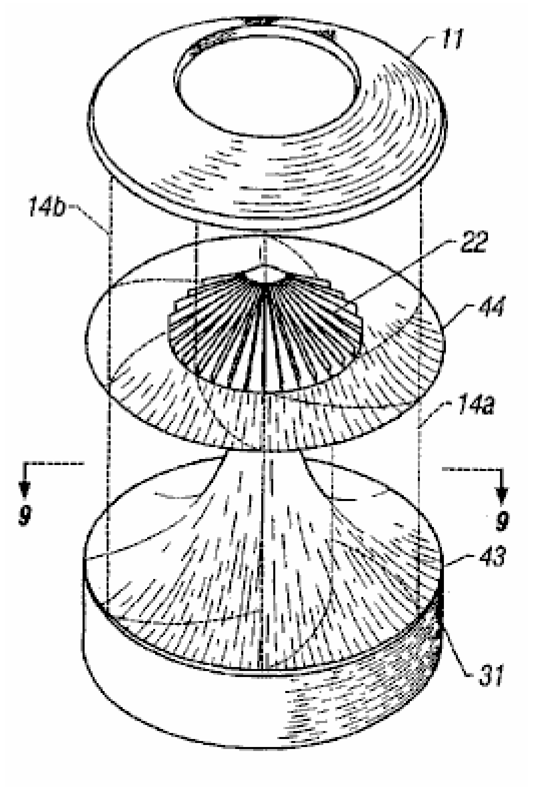

FIG. 8

Fig.8 is a perspective view of the embodiment of **Fig.1** with the toroidal longitudinal baffles **14a** and **14b** drawn in phantom so that the annular central divider (mid-deck) **44** and turbine **22** can be seen.

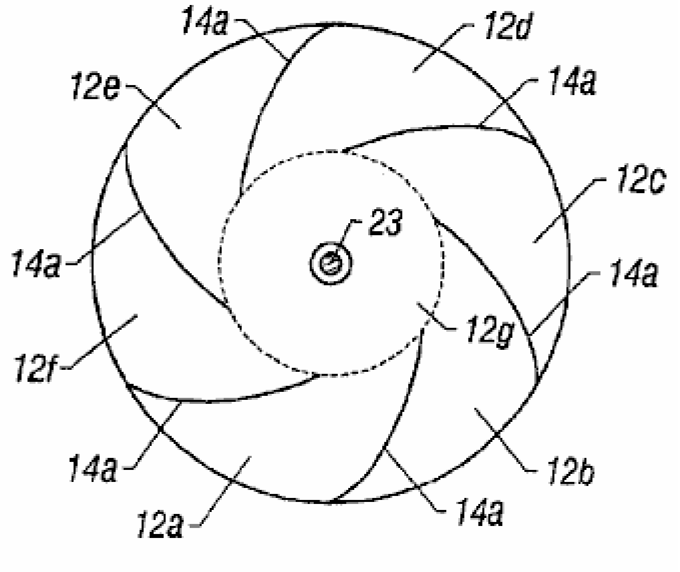

FIG. 9

Fig.9 is a horizontal cross-sectional view of the embodiment of **Fig.1** taken along line **9** — **9** of **Fig.8**. In this view, it can be seen that the upstream annular chamber **12** is divided into a set of smaller chambers **12a** through **12f** by the toroidal longitudinal baffles **14a**. The interior ends of the longitudinal baffles define a central vortex chamber **12g** (illustrated by a dashed circle) in which the upstream vortex is formed, and from which the upstream vortex enters the turbine **22**. The central vortex chamber **12g** has a diameter approximately equal to the diameter of the turbine.

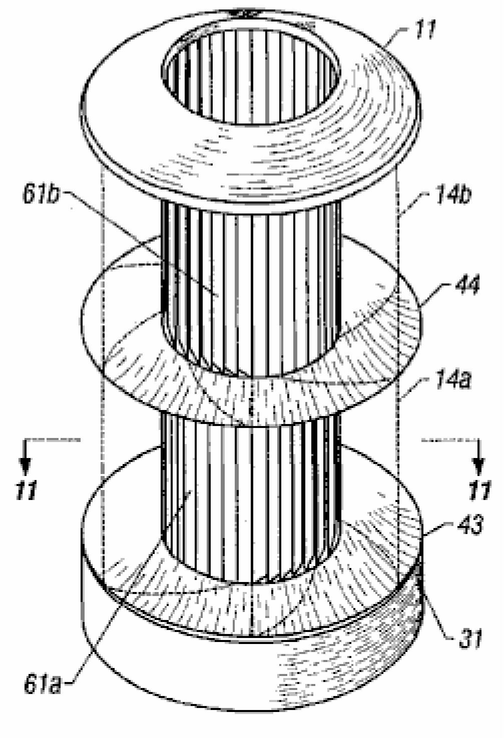

FIG. 10

Fig.10 is a perspective view of a second embodiment of the present invention that converts wind energy to mechanical or electrical energy, with the longitudinal baffles **14a** and **14b** drawn in phantom so that a set of hinged longitudinal louvers **61a** and **61b** can be seen. The hinged louvers are mounted in the openings between the longitudinal baffles. The louvers may be mounted in a circular configuration anywhere from the outside edge of the longitudinal baffles to the inside edge of the baffles. In the version shown, the louvers are longitudinally mounted at the inside edge of the baffles, around the perimeter of the central vortex chamber **12g**. Each of the louvers is hinged on one side (i.e., the windward side as wind enters through the baffles) so that the louver may be opened toward the central vortex chamber by the force of the incoming wind. The width of each louver is slightly greater than the distance between louvers so that each louver slightly overlaps the hinged edge of the next louver. This prevents the louvers from opening outward.

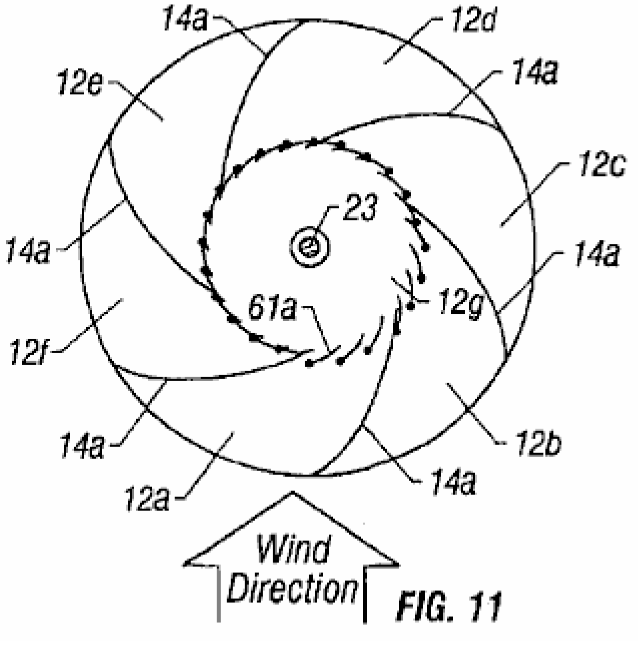

FIG. 11

In **Fig.11** there is shown a horizontal cross-sectional view of the embodiment of **Fig.10** taken along line **11 — 11**. During operation, wind blowing in the direction shown from the outside of the energy conversion device is funnelled by the toroidal longitudinal baffles **14a** into upstream chambers **12a** and **12b**. The baffles block the wind from entering the other chambers **12c** through **12f**. The wind flows through chambers **12a** and **12b**, and enters the central vortex chamber **12g** by opening the hinged longitudinal louvers **61a** which are mounted between the baffles in the openings defining chambers **12a** and **12b**. The remaining louvers remain closed, preventing the wind from exiting through the sides of the device. Thus, the wind-activated louvers are, in effect, one-way valves allowing the wind to flow into the central vortex chamber through the sides of the device, but only allowing the wind to exit through the top of the chamber, and through the turbine **22**.

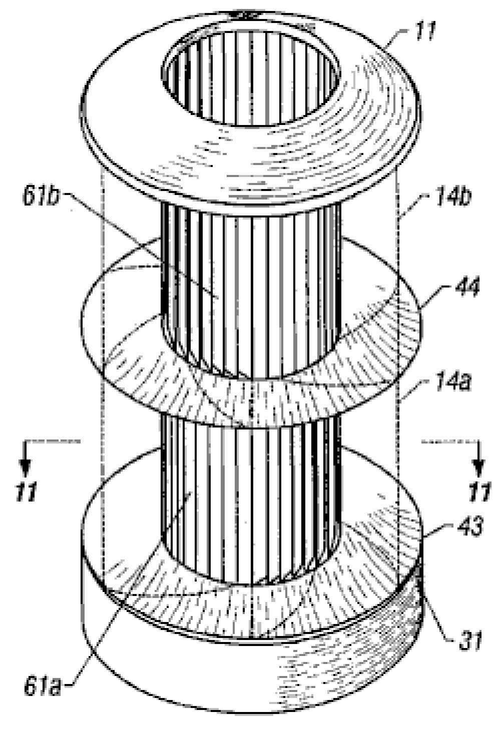

FIG. 10

Referring again to **Fig.10**, it can be seen that the longitudinal louvers **61a** mounted in the upstream chamber **12** are hinged on the opposite side from the louvers **61b** mounted in the downstream chamber **13**. This is because the vortex in the downstream chamber rotates in the opposite direction from the vortex in the upstream chamber, and the downstream toroidal baffles **14b** funnel the wind into the louvers **61b** in the opposite direction. Like the louvers **61a** in the upstream chamber **12**, the louvers **61b** in the downstream chamber **13** act as one-way valves allowing the wind to flow into the central vortex chamber through the sides of the device, but only allowing the wind to exit through the top of the chamber, and out of the device. This configuration helps to maintain the strength of both the upstream and the downstream vortices during operation of the device.

It should be recognized that some degree of improved energy-conversion performance may be obtained in a configuration in which there are toroidal baffles **14a** and hinged louvers **61a** only in the upstream annular chamber **12** because this ensures that all of the wind or other fluid entering the sides of the upstream chamber flows through the turbine. The addition of toroidal baffles **14b** in the downstream annular chamber **13** provides additional improved performance, particularly when the direction of rotation of the downstream vortex is opposite the direction of the upstream vortex. Optimum energy-conversion performance is provided by a device having oppositely configured toroidal baffles **14a** and **14b**, and oppositely hinged louvers **61a** and **61b**, for both the upstream annular chamber **12** and the downstream annular chamber **13**.

It is to be understood that even though numerous characteristics and advantages of the present invention have been set forth in the foregoing description, the disclosure is illustrative only, and changes may be made in detail, especially in matters of size, shape, and arrangement of parts within the principles of the invention to the full extent indicated by the broad general meaning of the terms in which the appended claims are expressed.

Claims:

What is claimed is:

1. A fluid-powered energy conversion device for converting energy in a moving fluid into mechanical energy, said device comprising: a rigid cylindrical frame having an upstream annular chamber and a downstream annular chamber, each of said chambers having sides that are open to allow entry of the moving fluid; a first set of baffles

longitudinally mounted in the upstream chamber that operate to create in the upstream chamber, an upstream drive vortex rotating in a first direction when the moving fluid enters the upstream chamber through the upstream chamber's open sides and through openings between the baffles; a first set of hinged louvers positioned in the openings between the first set of baffles and encircling an upstream central vortex chamber cantered around a central longitudinal axis of the device, said first set of louvers being operable to permit entry of the moving fluid into the upstream central vortex chamber only when the fluid is rotating in the first direction, and to prevent the fluid from exiting the upstream central vortex chamber through the sides of the device; a floor of the upstream annular chamber that slopes toward the downstream chamber as the floor approaches the central longitudinal axis of the device, said floor causing the drive vortex to flow downstream through the upstream central vortex chamber and pass through a central aperture located between the upstream annular chamber and the downstream annular chamber; a longitudinal drive shaft centrally mounted in the central aperture; and a turbine mounted on the drive shaft in the central aperture, said turbine being rotated by the drive vortex as the drive vortex passes through the central aperture.

2. The fluid-powered energy conversion device of claim 1 further comprising a second set of baffles longitudinally mounted in the downstream chamber that operate to create in the downstream chamber, a downstream extraction vortex rotating in a direction opposite to the first direction when the moving fluid enters the downstream chamber through the downstream chamber's open sides and through openings between the baffles, whereby the turbine is rotated by the drive vortex as the drive vortex passes through the turbine and reverses direction to match the direction of the extraction vortex.

3. The fluid-powered energy conversion device of claim 2 further comprising an annular central divider between the upstream chamber and the downstream chamber, said divider having a downstream surface that slopes downstream as it approaches the central longitudinal axis of the device, said downstream surface causing the extraction vortex to flow downstream, thereby creating an area of reduced fluid pressure downstream of the turbine.

4. The fluid-powered energy conversion device of claim 2 further comprising a second set of hinged louvers positioned in the openings between the second set of baffles and encircling a downstream central vortex chamber cantered around the central longitudinal axis of the device, said second set of louvers being operable to permit entry of the moving fluid into the downstream central vortex chamber only when the fluid is rotating in the direction opposite to the first direction, and to prevent the fluid from exiting the downstream central vortex chamber through the sides of the device.

5. The fluid-powered energy conversion device of claim 4 wherein said first set of baffles are curved to form a toroidal pattern in the first direction, and said second set of baffles are curved to form a toroidal pattern in the direction opposite to the first direction.

6. The fluid-powered energy conversion device of claim 5 wherein said turbine comprises a set of rotating blades, each of said blades having a cross-sectional shape of a curved airfoil that generates a lift force, said lift force being directed in the direction of rotation of the turbine.

7. The fluid-powered energy conversion device of claim 1 further comprising a flywheel mounted on the drive shaft, said flywheel having sufficient mass to operate as an internal energy storage device due to its angular momentum.

8. The fluid-powered energy conversion device of claim 7 wherein said flywheel is a permanent magnet.

9. The fluid-powered energy conversion device of claim 7 wherein said flywheel is a fluid-filled flywheel that rotates with the drive shaft in a direction of rotation, said fluid-filled flywheel comprising: a hollow disk-shaped shell filled with fluid; and a set of radial bulkheads that separate the interior of the shell into separate sections, each of said bulkheads having at least one gate pivotally mounted thereon to open in a direction opposite to the direction of rotation, said gate covering an aperture in the bulkhead when the gate is pivoted to a closed position, and said gate opening the aperture when the gate is pivoted to an open position; whereby the gates are opened by the fluid when the flywheel accelerates in the direction of rotation, thus allowing the fluid to flow through the apertures in the bulkheads and reduce start-up inertia of the flywheel, and whereby the gates are closed by the fluid when the flywheel decelerates, thus preventing the fluid from flowing through the apertures, and causing the flywheel to maintain angular momentum like a solid flywheel.

10. The fluid-powered energy conversion device of claim 9 wherein the hollow disk-shaped shell includes: an annular compartment filled with the fluid; and a cooling fan mounted in a central hub section of the shell.

11. The fluid-powered energy conversion device of claim 1 further comprising an electrical generator mounted on the drive shaft, said generator converting mechanical energy from the rotation of the shaft into electrical energy.

12. The fluid-powered energy conversion device of claim 11 further comprising a cooling fan mounted on the drive shaft, said cooling fan directing cooling air through the generator.

13. A wind-powered energy conversion device for converting wind energy into mechanical energy, said device comprising: a rigid cylindrical frame having an upstream annular chamber, a downstream annular chamber, and an annular central divider between the upstream chamber and the downstream chamber, each of said chambers having sides that are open to allow entry of ambient wind, and said annular central divider having a central aperture therein and having a downstream surface that slopes downstream as it approaches a central longitudinal axis of the device; a first set of baffles longitudinally mounted in the upstream chamber and curved to form a toroidal pattern that operates to create in an upstream central vortex chamber cantered around a central longitudinal axis of the device, an upstream drive vortex rotating in a first direction when the ambient wind enters the upstream chamber through the upstream chamber's open sides and through openings between the baffles; a first set of hinged louvers positioned in the openings between the first set of baffles and encircling the upstream central vortex chamber, said first set of louvers being operable to permit entry of the wind into the upstream central vortex chamber only when the wind is rotating in the first direction, and to prevent the wind from exiting the upstream central vortex chamber through the sides of the device; a second set of baffles longitudinally mounted in the downstream chamber and curved to form a toroidal pattern operable to create in a downstream central vortex chamber cantered around the central longitudinal axis of the device, a downstream extraction vortex rotating in a direction opposite to the first direction when the ambient wind enters the downstream chamber through the downstream chamber's open sides and through openings between the baffles; a second set of hinged louvers positioned in the openings between the second set of baffles and encircling the downstream central vortex chamber, said second set of louvers being operable to permit entry of the wind into the downstream central vortex chamber only when the wind is rotating in the direction opposite to the first direction, and to prevent the wind from exiting the downstream central vortex chamber through the sides of the device; a floor of the upstream annular chamber that slopes downstream as the floor approaches a central longitudinal axis of the device, said floor causing the drive vortex to flow downstream and pass through the central aperture in the annular central divider; a longitudinal drive shaft centrally mounted in the central aperture; and a turbine mounted on the drive shaft in the central aperture, said turbine comprising a set of rotating blades, each of said blades having a cross-sectional shape of a curved airfoil that generates a lift force, said lift force being directed in the direction of rotation of the turbine, said turbine being rotated by the drive vortex as the drive vortex passes through the turbine and reverses direction to match the direction of the extraction vortex.

14. The wind-powered energy conversion device of claim 13 further comprising a flywheel mounted on the drive shaft, said flywheel having sufficient mass to operate as an internal energy storage device due to its angular momentum.

15. The wind-powered energy conversion device of claim 13 further comprising an electrical generator mounted on the drive shaft, said generator converting mechanical energy from the rotation of the shaft into electrical energy.

16. The wind-powered energy conversion device of claim 13 wherein the extraction vortex rotates in a counter-cyclonic direction so that the extraction vortex dissipates after it exits the downstream chamber.

17. A wind-powered energy conversion device for converting high-speed wind energy into mechanical energy, said device comprising: a rigid cylindrical frame having an upstream annular chamber and a downstream annular chamber, each of said chambers having sides that are open to allow entry of the high-speed wind; a first set of baffles longitudinally mounted in the upstream chamber that create in an upstream central vortex chamber, an upstream drive vortex rotating in a first direction when the high-speed wind enters the upstream chamber through the upstream chamber's open sides and through openings between the baffles; a first set of hinged louvers positioned in the openings between the first set of baffles and encircling the upstream central vortex chamber, said first set of louvers being operable to permit entry of the wind into the upstream central vortex chamber only when the wind is rotating in the first direction, and to prevent the wind from exiting the upstream central vortex chamber through the sides of the device; a second set of baffles longitudinally mounted in the downstream chamber that create in a downstream central vortex chamber, a downstream extraction vortex rotating in the first direction when the high-speed wind enters the downstream chamber through the downstream chamber's open sides and through openings between the baffles; a second set of hinged louvers positioned in the openings between the second set of baffles and encircling the downstream central vortex chamber, said second set of louvers being operable to permit entry of the wind into the downstream central vortex chamber only when the wind is rotating in the first direction, and to prevent the wind from exiting the downstream central vortex chamber through the sides of the device; a floor of the upstream annular chamber that slopes downstream as the floor approaches a central longitudinal axis of the device, said floor causing the drive vortex to flow downstream and pass through a central aperture located between the upstream annular chamber and the downstream annular chamber; a longitudinal drive shaft centrally mounted in the central aperture; and a turbine mounted on the drive

shaft in the central aperture, said turbine being rotated by the drive vortex as the drive vortex passes through the turbine.

18. The wind-powered energy conversion device of claim 17 further comprising a fluid-filled flywheel mounted on the drive shaft that rotates with the drive shaft in a direction of rotation, said fluid-filled flywheel comprising: a hollow disk-shaped shell filled with fluid; and a set of radial bulkheads that separate the interior of the shell into separate sections, each of said bulkheads having at least one gate pivotally mounted thereon to open in a direction opposite to the direction of rotation, said gate covering an aperture in the bulkhead when the gate is pivoted to a closed position, and said gate opening the aperture when the gate is pivoted to an open position; whereby the gates are opened by the fluid when the flywheel accelerates in the direction of rotation, thus allowing the fluid to flow through the apertures in the bulkheads and reduce start-up inertia of the flywheel, and whereby the gates are closed by the fluid when the flywheel decelerates, thus preventing the fluid from flowing through the apertures, and causing the flywheel to maintain angular momentum like a solid flywheel.

19. A water-powered energy conversion device for converting energy in a moving stream of water into mechanical energy, said device comprising: a rigid cylindrical frame having an upstream annular chamber and a downstream annular chamber, each of said chambers having sides that are open to allow entry of the stream of water; a first set of baffles longitudinally mounted in the upstream chamber that create in an upstream central vortex chamber, an upstream drive vortex rotating in a first direction when the stream of water enters the upstream chamber through the upstream chamber's open sides and through openings between the baffles; a first set of hinged louvers positioned in the openings between the first set of baffles and encircling the upstream central vortex chamber, said first set of louvers being operable to permit entry of the water into the upstream central vortex chamber only when the water is rotating in the first direction, and to prevent the water from exiting the upstream central vortex chamber through the sides of the device; a second set of baffles longitudinally mounted in the downstream chamber that create in a downstream central vortex chamber, a downstream extraction vortex rotating in the first direction when the stream of water enters the downstream chamber through the downstream chamber's open sides and through openings between the baffles; a second set of hinged louvers positioned in the openings between the second set of baffles and encircling the downstream central vortex chamber, said second set of louvers being operable to permit entry of the water into the downstream central vortex chamber only when the water is rotating in the first direction, and to prevent the water from exiting the downstream central vortex chamber through the sides of the device; a floor of the upstream annular chamber that slopes downstream as the floor approaches a central longitudinal axis of the device, said floor causing the drive vortex to flow downstream and pass through a central aperture located between the upstream annular chamber and the downstream annular chamber; a longitudinal drive shaft centrally mounted in the central aperture; and a turbine mounted on the drive shaft in the central aperture, said turbine being rotated by the drive vortex as the drive vortex passes through the turbine.

20. The water-powered energy conversion device of claim 19 further comprising a fluid-filled flywheel mounted on the drive shaft that rotates with the drive shaft in a direction of rotation, said fluid-filled flywheel comprising: a hollow disk-shaped shell filled with fluid; and a set of radial bulkheads that separate the interior of the shell into separate sections, each of said bulkheads having at least one gate pivotally mounted thereon to open in a direction opposite to the direction of rotation, said gate covering an aperture in the bulkhead when the gate is pivoted to a closed position, and said gate opening the aperture when the gate is pivoted to an open position; whereby the gates are opened by the fluid when the flywheel accelerates in the direction of rotation, thus allowing the fluid to flow through the apertures in the bulkheads and reduce start-up inertia of the flywheel, and whereby the gates are closed by the fluid when the flywheel decelerates, thus preventing the fluid from flowing through the apertures, and causing the flywheel to maintain angular momentum like a solid flywheel.

21. A fluid-powered energy conversion device for converting energy in a moving fluid into mechanical energy, said device comprising: a rigid cylindrical frame having an upstream annular chamber and a downstream annular chamber cantered around a longitudinal axis, each of said chambers having sides that are open to allow entry of the moving fluid in a direction approximately perpendicular to the longitudinal axis, said upstream and downstream chambers being separated by an annular divider having a central aperture therein; a longitudinal drive shaft centrally mounted along the longitudinal axis and passing through the central aperture; a turbine mounted on the drive shaft in the central aperture; means for creating in the upstream chamber an upstream drive vortex rotating in a first direction when the moving fluid enters the upstream chamber through the upstream chamber's open sides: means for creating in the downstream chamber, a downstream extraction vortex rotating in a second direction opposite to the first direction when the moving fluid enters the downstream chamber through the downstream chamber's open sides; end means for causing the drive vortex to flow downstream and pass through the turbine, said turbine being rotated by the drive vortex as the drive vortex passes through the turbine and reverses direction to match the direction of the extraction vortex.

22. The fluid-powered energy conversion device of claim 21 wherein the means for creating an upstream drive vortex in the upstream chamber includes a first set of longitudinally mounted baffles having openings between

them through which the moving fluid enters the upstream chamber, said first set of baffles being curved to form a toroidal pattern in the first direction.

23. The fluid-powered energy conversion device of claim 22 wherein the means for creating an upstream drive vortex in the upstream chamber includes a first set of hinged louvers positioned in the openings between the first set of baffles and encircling the upstream chamber, said first set of louvers being operable to permit entry of the moving fluid into the upstream chamber only when the fluid is rotating in the first direction, and to prevent the fluid from exiting the upstream chamber through the sides of the device.

24. The fluid-powered energy conversion device of claim 23 wherein the means for creating a downstream extraction vortex in the downstream chamber includes a second set of longitudinally mounted baffles having openings between them through which the moving fluid enters the upstream chamber, said second set of baffles being curved to form a toroidal pattern in the second direction.

25. The fluid-powered energy conversion device of claim 24 wherein the means for creating a downstream extraction vortex in the downstream chamber includes a second set of hinged louvers positioned in the openings between the second set of baffles and encircling the downstream chamber, said second set of louvers being operable to permit entry of the moving fluid into the downstream chamber only when the fluid is rotating in the second direction, and to prevent the fluid from exiting the downstream chamber through the sides of the device.

26. The fluid-powered energy conversion device of claim 25 wherein the means for causing the drive vortex to flow downstream includes means for creating a pressure differential in which the fluid pressure in the downstream chamber is less than the fluid pressure in the upstream chamber.

27. The fluid-powered energy conversion device of claim 26 wherein the means for creating a pressure differential includes a downstream surface of the annular divider that slopes downstream as it approaches the central longitudinal axis of the device, said downstream surface causing the extraction vortex to flow downstream, thereby creating an area of reduced fluid pressure downstream of the turbine.

28. The fluid-powered energy conversion device of claim 27 wherein the means for causing the drive vortex to flow downstream includes a floor of the upstream annular chamber that slopes toward the downstream chamber as the floor approaches the central longitudinal axis of the device, said floor causing the drive vortex to flow downstream and pass through the turbine.

29. The fluid-powered energy conversion device of claim 21 further comprising a fluid-filled flywheel that rotates with the drive shaft in a direction of rotation, said fluid-filled flywheel comprising: a hollow disk-shaped shell filled with fluid: and a set of radial bulkheads that separate the interior of the shell into separate sections, each of said bulkheads having at least one gate pivotally mounted thereon to open in a direction opposite to the direction of rotation, said gate covering an aperture in the bulkhead when the gate is pivoted to a closed position, and said gate opening the aperture when the gate is pivoted to an open position; whereby the gates are opened by the fluid when the flywheel accelerates in the direction of rotation, thus allowing the fluid to flow through the apertures in the bulkheads and reduce start-up inertia of the flywheel, and whereby the gates are closed by the fluid when the flywheel decelerates, thus preventing the fluid from flowing through the apertures, and causing the flywheel to maintain angular momentum like a solid flywheel.

The 'Hotsabi' Booster

Here are the full step-by-step instructions for making a very simple single-cell booster design from "HoTsAbI" - a member of the Yahoo 'watercar' forum group. This is a very neat and simple electrolysis booster unit which has raised the average mpg from 18 to 27 (50% increase) on his 1992 5-litre Chevy Caprice.

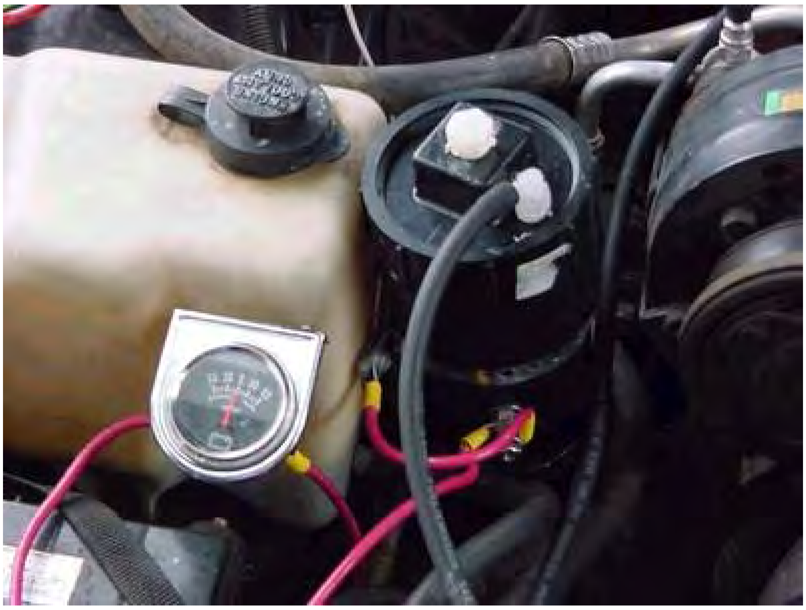

Caution: This is not a toy. If you make and use one of these, you do so entirely at your own risk. Neither the designer of the booster, the author of this document or the provider of the internet display are in any way liable should you suffer any loss or damage through your own actions. While it is believed to be entirely safe to make and use a booster of this design, provided that the safety instructions shown below are followed, it is stressed that the responsibility is yours and yours alone.

The unit draws 15 amps which is easily handled by the existing vehicle alternator. The construction uses ABS (Acrylonitrile Butadiene Styrene) plastic tubing with an electrolyte containing Sodium Hydroxide (NaOH – sold in America as "Red Devil" lye, 1 teaspoon mixed into 8 litres of distilled water) and the gas-mixture produced is fed directly into the air intake filter of the car engine. The electrodes are stainless steel with the negative electrode forming a cylinder around the positive electrode.

The circuit is wired so that it is only powered up when the car ignition switch is closed. A relay feeds power to the electrolyser which is three inches (75 mm) in diameter and about 10 inches (250 mm) tall. The electrolyser circuit is protected by a 30-amp circuit breaker. The electrolyser has several stainless steel wire mesh screens above the water surface:

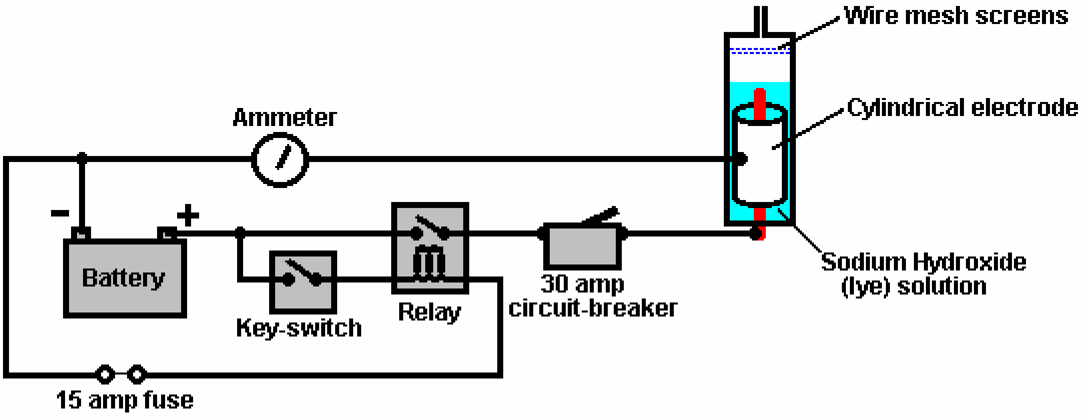

The output of the electrolyser is fed to a steam trap, also fitted with several stainless steel wire mesh screens, and then on via a one-way valve into a safety bubbler. The bubbler also has stainless steel wire mesh screens which the gas has to pass through before it exits the bubbler. The gas is then passed through an air-compressor style water trap to remove any remaining moisture, and is injected into the air intake of the vehicle. Although not shown in the diagram, the containers are protected by pop-out fittings which provide extra protection in the extremely unlikely event of any of the small volumes of gas being ignited by any means whatsoever.

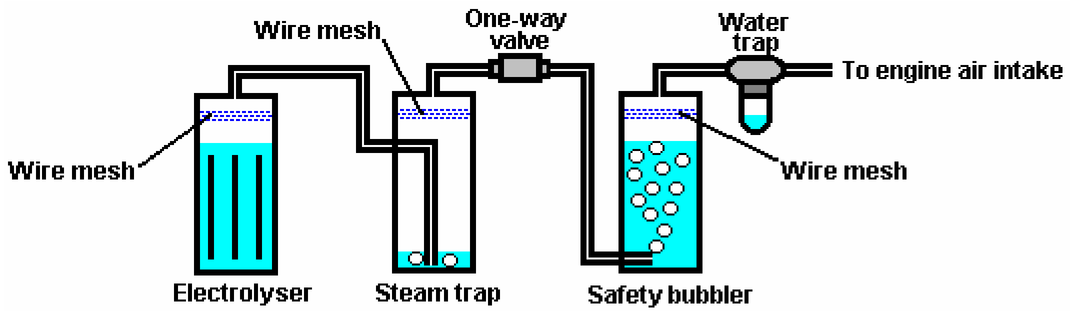

The ammeter is used to indicate when water should be added to the electrolyser, which is typically, after about 80 hours of driving and is done through a plastic screw cap on the top of the electrolyser cap (shown clearly in the first photograph). This unit used to be available commercially but the designer is now too busy to make them up, so he has generously published the plans free as shown here.

The designer says: please read all of these instructions carefully and completely before starting your project. This project is the construction of an electrolyser unit which is intended to improve the running of a vehicle by adding gases produced by the electrolysis of water, to the air drawn into the engine when it is running. There is no magic about this. The 'HHO' gas produced by the electrolysis acts as an igniter for the normal fuel used by the vehicle. This produces a much better burn quality, extracting extra energy from the normal fuel, giving better pulling power, smoother running, cooler engine operation, the cleaning out of old carbon deposits inside the engine and generally extending the engine life.

ELECTROLYSER PARTS LIST

1. One 7 inch long x 3 inch diameter piece of ABS tubing cut with square ends - de-burr the edges
2. One 3 inch (75 mm) diameter ABS Plug - clean out the threaded cap
3. One Threaded adaptor DWV 3 inch (75 mm) diameter HXFPT threaded cap ("DWV" and "HXFPT" are male and female threaded sewer-type plastic caps)
4. One 3 inch (75 mm) diameter ABS cap
5. One 4 inch (100 mm) Stainless steel cap screw 1/4 x 20
6. Two stainless steel 1 inch long (25 mm) 1/4 x 20 cap screw
7. One 10/32 inch x 1/4 inch stainless steel screw
8. Five washers and Eight stainless steel nuts 1/4 x 20
9. One piece of stainless steel shimstock 11 inch x 6 inch 0.003 inch thick
10. One piece of stainless steel 14 gauge wire mesh 8 inch x 3 inch
11. One 3/8 inch nylon plug
12. One ¼ inch x ¼ inch NPT (National Pipe Tap) barbed fitting
13. Plumbers tape

TOOLS LIST

1. Hand drill
2. Tin Snips (for cutting steel mesh and shimstock)
3. ¼ inch NPT tap and 5/16 inch drill bit
4. 3/8 inch NPT tap and ½ inch drill bit
5. 10/32 inch tap and 1/8 inch drill bit
6. One clamp and a piece of 1 inch x 1 inch wood strip
7. Hexagonal key "T-handle" wrench to fit the capscrew
8. Philips screwdriver
9. Small adjustable wrench

Cut and fit shimstock into ABS tubing, 11 inch works well as this gives a 1 inch overlap.

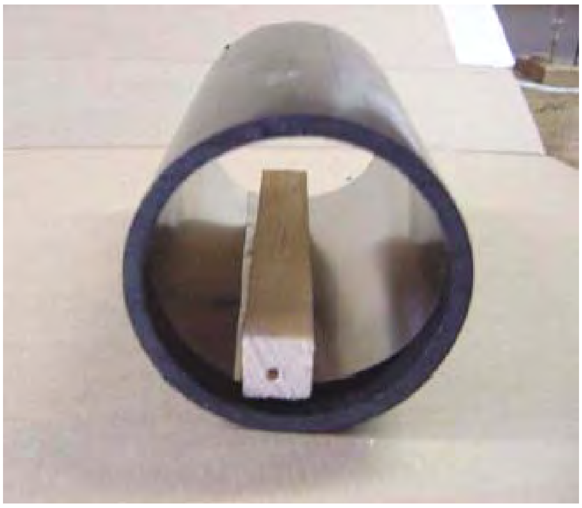

For drilling, use a strip of wood. Be sure that the shimstock is flush with at least one edge of the tube. Use the flush edge as the bottom of the electrolyser.

Clamp securely and drill two 0.165 inch holes, one on either side, perpendicular to each other, as best you can. These holes will be tapped 1/4 inch x 20

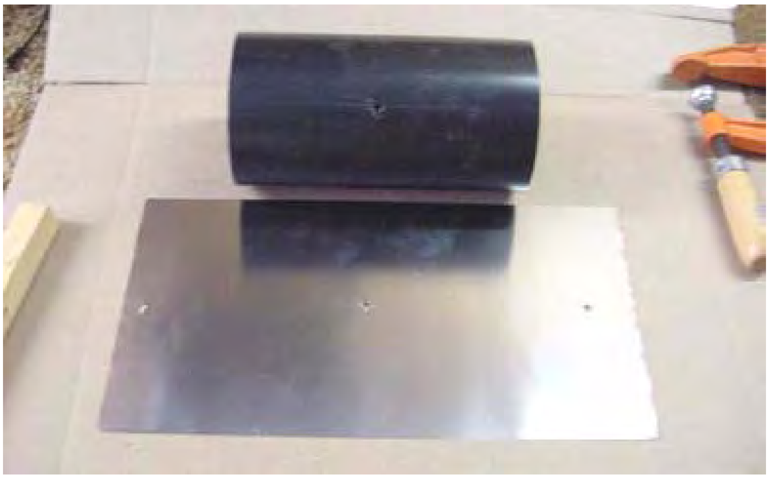

The shimstock holes need to be reamed out to accept the capscrew.

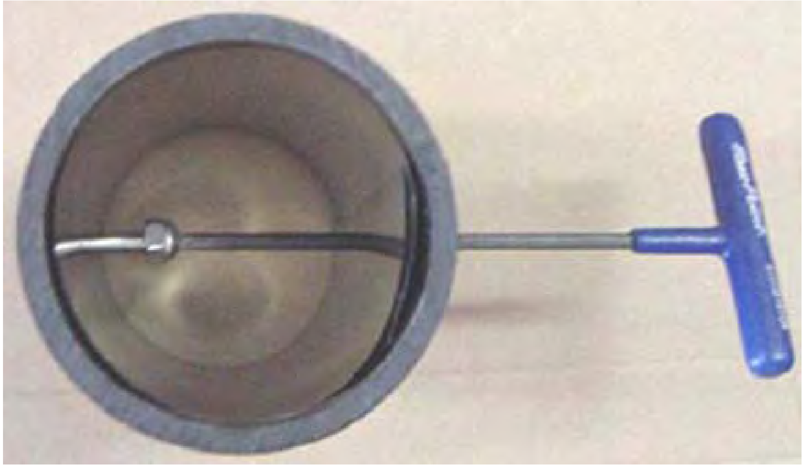

Note: This is why 2 holes are drilled (to facilitate assembly). Next, attach the electrode inside the barrel. It is **important** to us a stainless steel nut inside to seat the capscrew.

Note that the shimstock is flush with the bottom of the tube. Final assembly for the electrodes. Note that the capscrews each have stainless steel nuts inside the barrel to seat to the shimstock. The screw on the left will be used as the Negative battery connection to the cell while the screw on the right merely seats the shimstock.

The upper component is a Threaded Adaptor DWV 3 inch HXFPT. The lower component is a 3 inch ABS Plug, clean out the threaded cap. Prepare the top cap and plug: Drill and tap a 3/8 inch diameter NPT in the centre of the threaded cap (this is the main filling plug). Drill and tap a 1/4 inch NPT on the side (to take the barbed fitting).

Prepare the bottom cap: Drill and tap 1/4 inch x 20 hole in the centre. Install the capscrew with a stainless steel nut. Tighten and install a washer and stainless steel nut outside.

This is the Positive battery connection.

This is the finished cell shown here upside down. Assemble the unit using ABS glue.

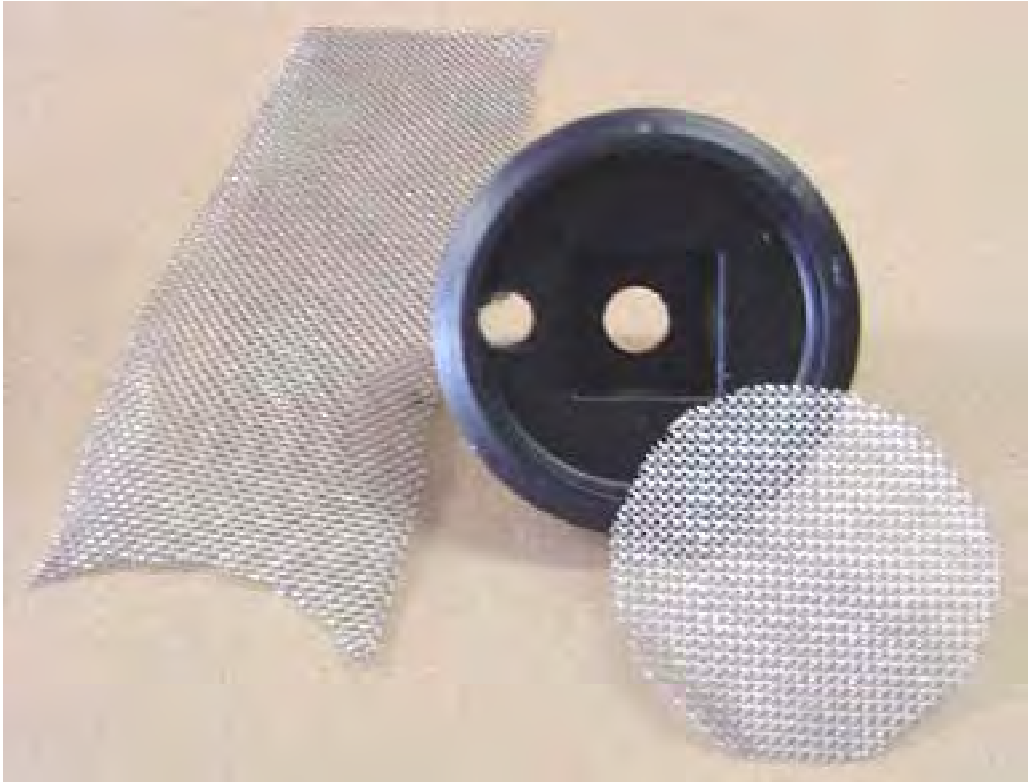

Next, prepare the stainless steel mesh. Cut it carefully to fit inside the threaded cap. Use at least 3 pieces.

After fitting the mesh tightly into the cap, mount it with a 10/32 inch stainless steel screw on the opposite side to the 1/4 inch tapped hole for the barbed fitting. This is a flame arrestor, so make CERTAIN that the entire inside is covered tightly. Note that the sides wrap up. Turn each layer to cross the grain of the mesh in the successive layers.

Use white "plumber's tape" on all threaded fittings.

This unit has raised the average miles-per-gallon performance of my 1992 5-litre Chevy Caprice from 18 to 27 mpg which is a 50% increase. It allows a very neat, professional-looking installation which works very well:

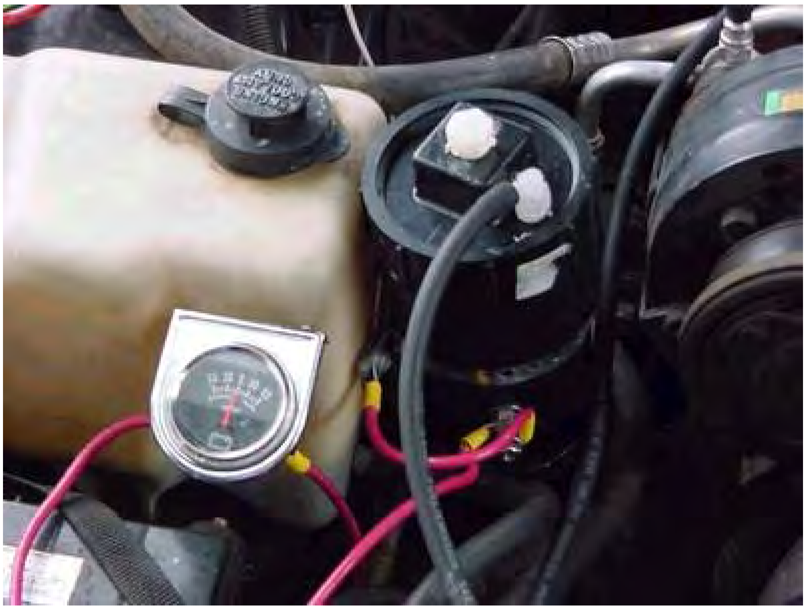

All of the 3/8 inch plastic fittings including one way valves, come from Ryanherco and are made of Kynar to withstand heat. The water trap is from an air compressor. The 3/16 inch tubing or hose is also high-heat type from automatic transmission coolant lines. I use Direct Current and limited with a thermal breaker and LYE mixture adjustment. If you need help then e-mail hotsabi (at) gmail (dot) com (put "e-cell" in the title of your mail).

Comments by Patrick Kelly:

This design is very simple to construct, but as it is just a single cell with the whole of the vehicle's voltage placed across it, a good deal of the electrical power goes in heating the electrolyte rather than making the wanted hydroxy gas.

If there is sufficient space to fit two in, then using two allows you use half the current and that halves the heat generated in the units and doubles the length of time between topping up the unit with water:

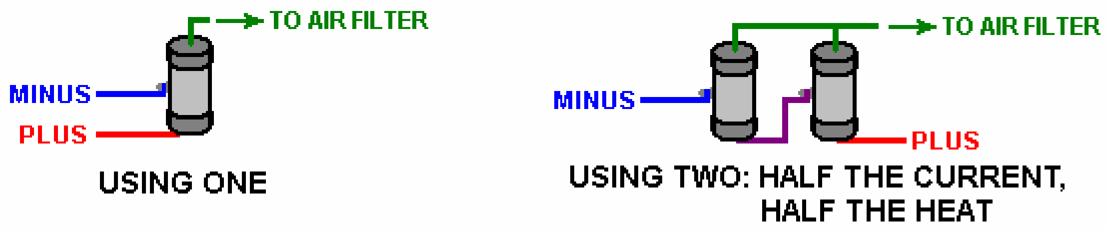

Please don't get the impression that if a small amount of HHO gas produces a very beneficial effect on the running of a vehicle, that adding much more HHO gas will give even better results, as that is not the case. Each vehicle is different and will have a different optimum flow rate of HHO gas and if that optimum rate is exceeded, then although the mpg improvement may actually be reduced rather than increased. If in doubt, start will a low current (with more dilute electrolyte) which will produce less gas and see what the mpg results are. Then try a slightly stronger mix and check the mpg over several gallons of fuel. This will allow you to determine the booster current at which your particular vehicle operates best. This is not a competition to see who can produce the highest gas output, instead, it is a process to find out what the highest mpg your vehicle can give when using this simple booster design.

Mixing the electrolyte: Please remember that the sodium hydroxide or 'lye' (Lowes store: Roebic 'Heavy Duty' Crystal Drain Opener) is a strongly caustic substance which needs to be treated with care.

Always store it in a sturdy air-tight container which is clearly labelled "DANGER! - Sodium Hydroxide". Keep the container in a safe place, where it can't be reached by children, pets or people who won't take any notice of the label. If your supply of sodium hydroxide is in a strong plastic bag, then once you open the bag, you should transfer all its contents to a sturdy, air-tight, plastic storage container, which you can open and close without risking spilling the contents. Hardware stores sell plastic buckets with air tight lids that can be used for this purpose.

When working with dry flakes or granules, wear safety goggles, rubber gloves, a long sleeved shirt, socks and long trousers. Also, don't wear your favourite clothes when handling hydroxy solution as it is not the best thing to get on clothes. It is also good practice to wear a face mask which covers your mouth and nose. If you are mixing solid sodium hydroxide with water, always add the hydroxide to the water, and not the other way round, and use a plastic container for the mixing, preferably one which has double the capacity of the finished mixture. The mixing should be done in a well-ventilated area which is not draughty as air currents can blow the dry hydroxide around.

When mixing the electrolyte, **never** use warm water. The water should be cool because the chemical reaction between the water and the hydroxide generates a good deal of heat. If possible, place the mixing container in a larger container filled with cold water, as that will help to keep the temperature down, and if your mixture should "boil over" it will contain the spillage. Add only a small amount of hydroxide at a time, stirring continuously, and if you stop stirring for any reason, put the lids back on all containers.

If, in spite of all precautions, you get some hydroxide solution on your skin, wash it off with plenty of running cold water and apply some vinegar to the skin. Vinegar is acidic, and will help balance out the alkalinity of the hydroxide. You can use lemon juice if you don't have vinegar to hand - but it is always recommended to keep a bottle of vinegar handy.

The 'Smacks' Booster

The Smack's Booster is a piece of equipment which increases the mpg performance of a car or motorcycle, and reduces the harmful emissions dramatically. It does this by using some current from the vehicle's battery to break water into a mixture of hydrogen and oxygen gasses called "hydroxy" gas which is then added to the air which is being drawn into the engine. The hydroxy gas improves the quality of the fuel burn inside the engine, increases the engine power, cleans old carbon deposits off the inside of an old engine, reduces the unwanted exhaust emissions and improves the mpg figures under all driving conditions, provided that the fuel computer does not try to pump excess fuel into the engine when it detects the much improved quality of the exhaust.

This hydroxy booster is easy to make and the components don't cost much. The technical performance of the unit is very good as it produces 1.7 litres of hydroxy gas per minute at a very reasonable current draw. This is how to make and use it.

Caution: This is not a toy. If you make and use one of these, you do so entirely at your own risk. Neither the designer of the booster, the author of this document or the provider of the internet display are in any way liable should you suffer any loss or damage through your own actions. While it is believed to be entirely safe to make and use a booster of this design, provided that the safety instructions shown below are followed, it is stressed that the responsibility is yours and yours alone.

The Safety Gear

Before getting into the details of how to construct the booster, you must be aware of what needs to be done when using any booster of any design. Firstly, hydroxy gas is highly explosive. If it wasn't, it would not be able to do it's job of improving the explosions inside your engine. Hydroxy gas needs to be treated with respect and caution. It is important to make sure that it goes into the engine and nowhere else. It is also important that it gets ignited inside the engine and nowhere else.

To make these things happen, a number of common-sense steps need to be taken. Firstly, the booster must not make hydroxy gas when the engine is not running. The best way to arrange this is to switch off the current going to the booster. It is **not** sufficient to just have a manually-operated dashboard On/Off switch as it is almost certain that switching off will be forgotten one day. Instead, the electrical supply to the booster is routed through the ignition switch of the vehicle. That way, when the engine is turned off and the ignition key removed, it is certain that the booster is turned off as well.

So as not to put too much current through the ignition switch, and to allow for the possibility of the ignition switch being on when the engine is not running, instead of wiring the booster directly to the switch, it is better to wire a standard automotive relay across the oil pressure sending unit and let the relay carry the booster current. If the engine stops running, the oil pressure drops and if the booster is connected as shown, then this will also power down the booster.

An extra safety feature is to allow for the (very unlikely) possibility of an electrical short-circuit occurring in the booster or its wiring. This is done by putting a fuse or contact-breaker between the battery and the new circuitry as shown in this sketch:

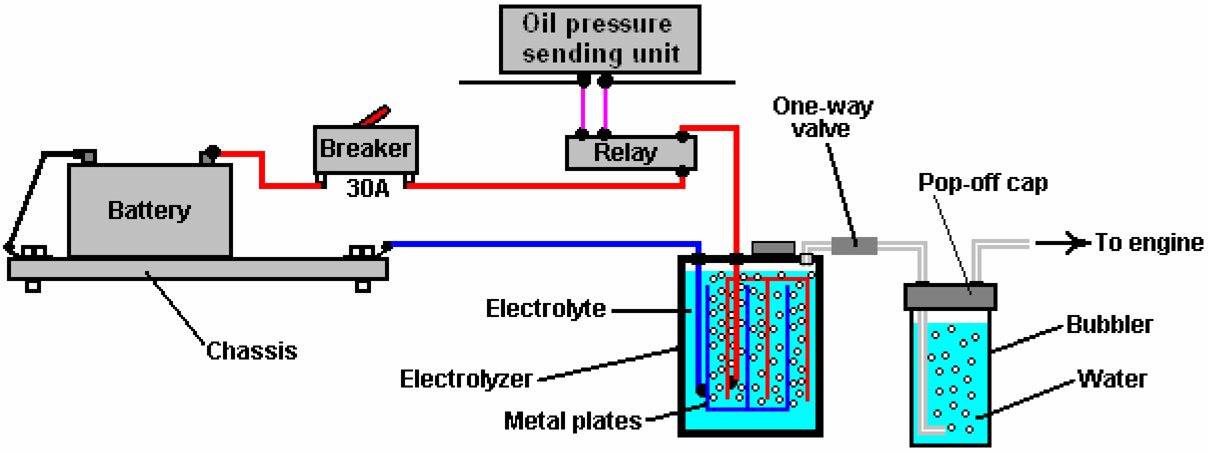

If you choose to use a contact-breaker, then a light-emitting diode ("LED") with a current limiting resistor of say, 680 ohms in series with it, can be wired directly across the contacts of the circuit breaker. The LED can be mounted on the dashboard. As the contacts are normally closed, they short-circuit the LED and so no light shows. If the circuit-breaker is tripped, then the LED will light up to show that the circuit-breaker has operated. The current through the LED is so low that the electrolyser is effectively switched off when the contact breaker opens. This is not a necessary feature, merely an optional extra:

In the first sketch, you will notice that the booster contains a number of metal plates and the current passing through the liquid inside the booster (the "electrolyte") between these plates, causes the water to break up into the required hydroxy gas mix. A very important safety item is the "bubbler" which is just a simple container with some water in it. The bubbler has the gas coming in at the bottom and bubbling up through the water. The gas collects above the water surface and is then drawn into the engine through an outlet pipe above the water surface. To prevent water being drawn into the booster when the booster is off and cools down, a one-way valve is placed in the pipe between the booster and the bubbler.

If the engine happens to produce a backfire, then the bubbler blocks the flame from passing back through the pipe and igniting the gas being produced in the booster. If the booster is made with a tightly-fitting lid rather than a screw-on lid, then if the gas in the bubbler is ignited, it will just blow the lid off the bubbler and rob the explosion of any real force. A bubbler is a very simple, very cheap and very sensible thing to install. It also removes any traces of electrolyte fumes from the gas before it is drawn into the engine.

You will notice that the wires going to the plates inside the electrolyser are both connected well below the surface of the liquid. This is to avoid the possibility of a connection working loose with the vibration of the vehicle and causing a spark in the gas-filled region above the surface of the liquid, and this volume is kept as low as possible as another safety feature.

The Design

The booster is made from a length of 4-inch diameter PVC pipe, two caps, several metal plates, a couple of metal straps and some other minor bits and pieces.

This is not rocket science, and this booster can be built by anybody. A clever extra feature is the transparent plastic tube added to the side of the booster, to show the level of the liquid inside the booster without having to unscrew the cap. Another neat feature is the very compact transparent bubbler which is actually attached to the booster and which shows the gas flow coming from the booster. The main PVC booster pipe length can be adjusted to suit the available space beside the engine.

Bubbler connections close up:

This booster uses cheap, standard electrical stainless steel wall switch covers from the local hardware store and stainless steel straps cut from the handles of a wide range of stainless steel food-preparation ladles:

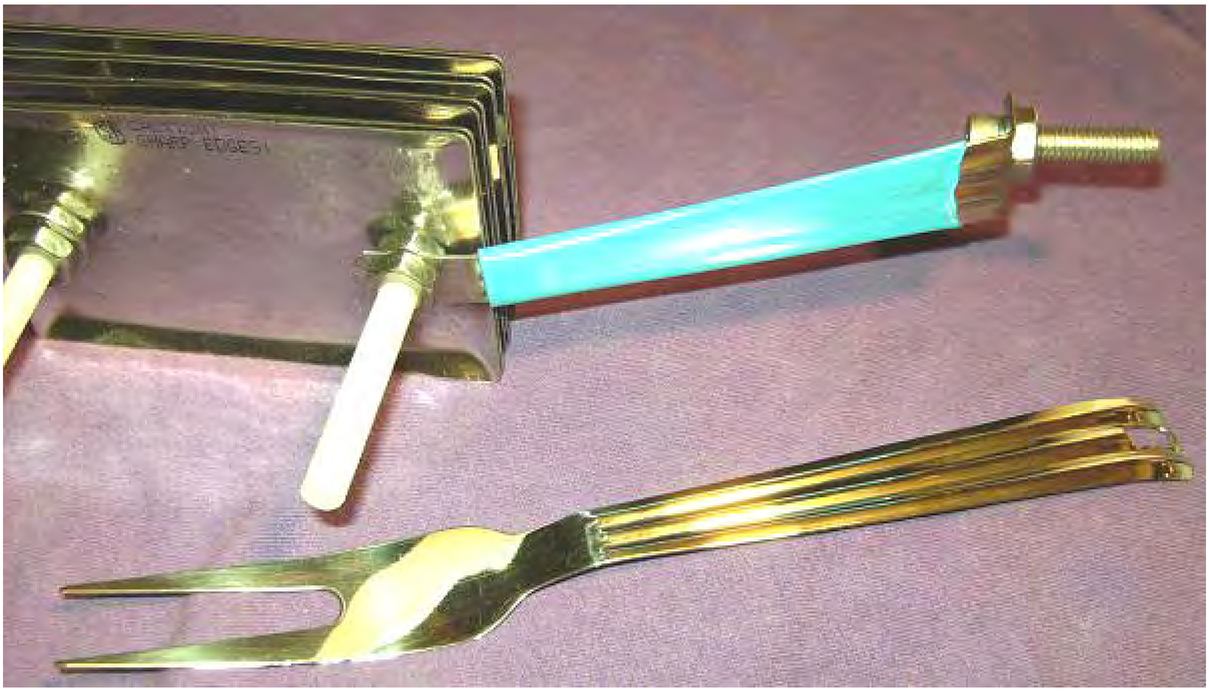

The electrical cover plates are clamped together in an array of eight closely-spaced pairs of covers. The plates are held in a vise and the holes drilled out to the larger size needed. The covers are further treated by being clamped to a workbench and dented using a centre-punch and hammer. These indentations raise the gas output from 1.5 lpm to 1.7 lpm as the both increase the surface area of the cover and provide points from which the gas bubbles can drop off the cover more easily. The more indentations the better.

The active surfaces of the plates - that is, the surfaces which are 1.6 mm apart from each other, need to be prepared carefully. To do this, these surfaces are scored in an X-pattern using 36-grade coarse sandpaper. Doing this creates miniature sharp-crested bumps covering the entire surface of each of these plates. This type of surface helps the hydroxy bubbles break away from the surface as soon as they are formed. It also increases the effective surface area of the plate by about 40%. I know that it may seem a little fussy, but it has been found that fingerprints on the plates of any electrolyser seriously hinder the gas production because they reduce the working area of the plate quite substantially. It is important then, to either avoid all fingerprints (by wearing clean rubber gloves) or finish the plates by cleaning all grease and dirt off the working surfaces with a good solvent, which is washed off afterwards with distilled water. Wearing clean rubber gloves is by far the better option as cleaning chemicals are not a good thing to be applying to these important surfaces.

Shown above are typical hand tools used to create the indentations on the plates. The active plate surfaces – that is, the surfaces which are 1.6 mm apart – are indented as well as being sanded.

An array of these prepared plates is suspended inside a container made from 4-inch (100 mm) diameter PVC pipe. The pipe is converted to a container by using PVC glue to attach an end-cap on one end and a screw-cap fitting on the other. The container then has the gas-supply pipe fitting attached to the cap, which is drilled with two holes to allow the connecting straps for the plate array to be bolted to the cap, as shown here:

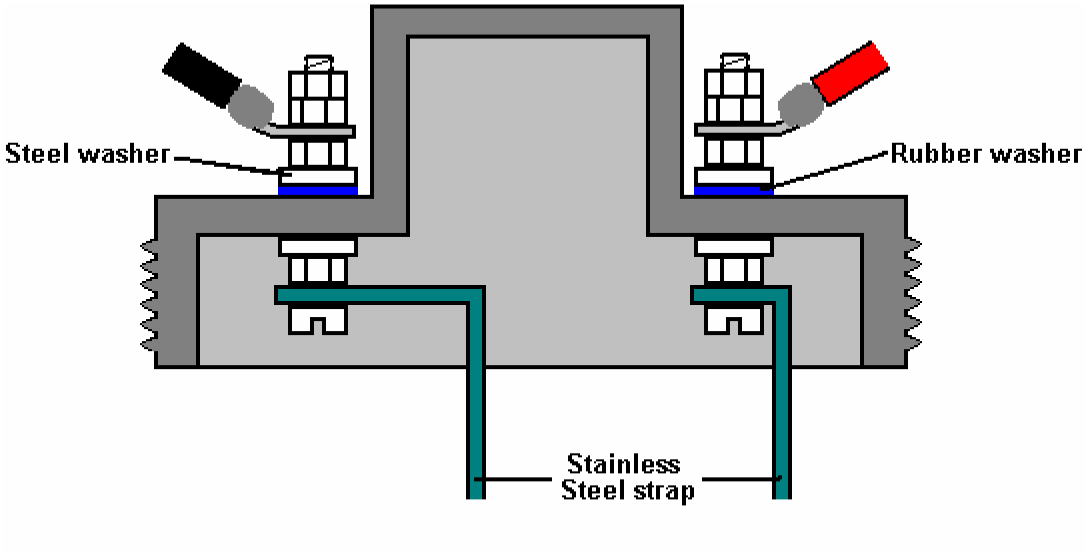

CROSS-SECTION THROUGH CAP

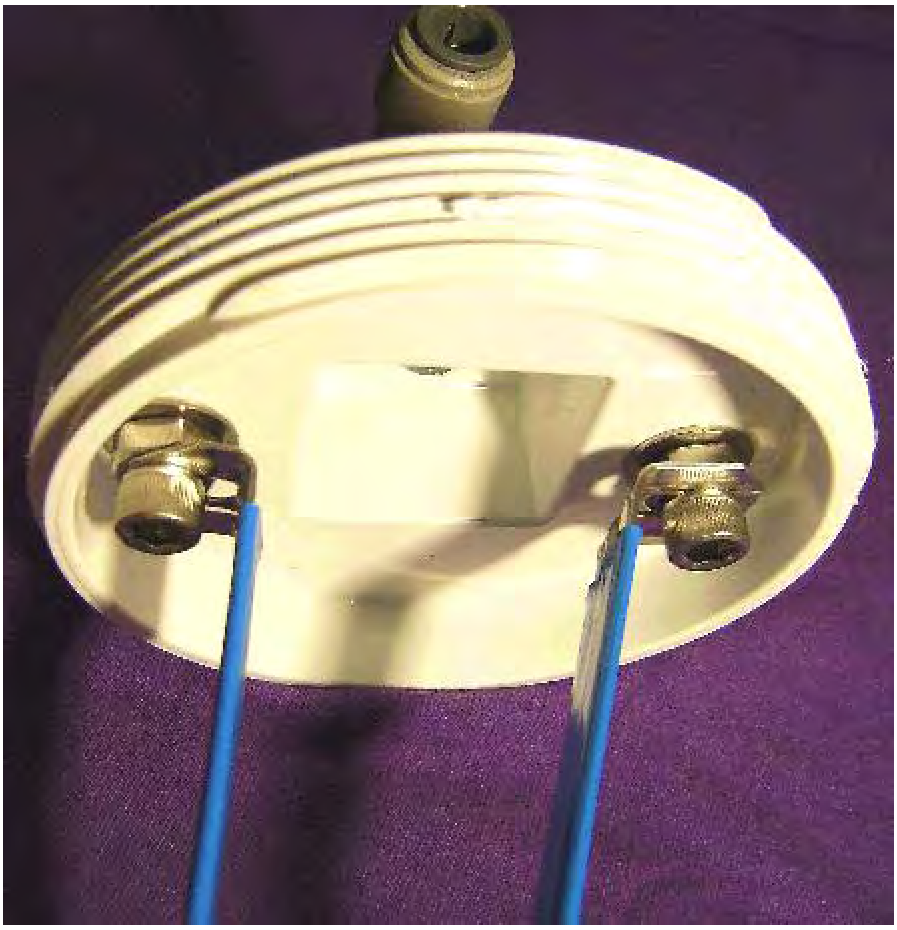

In order to ensure that the stainless steel straps are tightly connected to the electric wiring, the cap bolts are both located on the robust, horizontal surface of the cap, and clamped securely both inside and out. A rubber washer or rubber gasket is used to enhance the seal on the outside of the cap. If available, a steel washer with integral rubber facing can be used.

As the stainless steel strap which connects the booster plates to the negative side of the electrical supply connects to the central section of the plate array, it is necessary to kink it inwards. The angle used for this is in no way important, but the strap should be perfectly vertical when it reaches the plates.

The picture above shows clearly the wall plates being used and how the bubbler is attached to the body of the booster with super-glue. It also shows the various pipe connections. The stainless steel switch-cover plates are 2.75 inch x 4.5 inch (70 mm x 115 mm) in size and their existing mounting holes are drilled out to 5/16 inch (8 mm) diameter in order to take the plastic bolts used to hold the plates together to make an array. After a year of continuous use, these plates are still shiny and not corroded in any way.

Three stainless steel straps are used to connect the plate array together and connect it to the screw cap of the booster. These straps are taken from the handles of cooking utensils and they connect to the outer two plates at the top and the third strap runs across the bottom of the plate array, clear of the plates, and connects to both outside plates as can be seen in the diagrams.

The plates are held in position by two plastic bolts which run through the original mounting holes in the plates. The arrangement is to have a small 1.6 mm gap between each of eight pairs of plates. These gaps are produced by putting plastic washers on the plastic bolts between each pair of plates.

The most important spacing here is the 1.6 mm gap between the plates as this spacing has been found to be very effective in the electrolysis process. The way that the battery is connected is unusual in that it leaves most of the plates apparently unconnected. These plate pairs are called “floaters” and they do produce gas in spite of looking as if they are not electrically connected (they are connected through the electrolyte).

Stainless steel nuts are used between each pair of plates and these form an electrical connection between adjacent plates. The plate array made in this way is cheap, easy to construct and both compact and robust. The electrical straps are bolted to the screw cap at the top of the unit and this both positions the plate array securely and provides electrical connection bolts on the outside of the cap while maintaining an airtight seal for the holes in the cap.

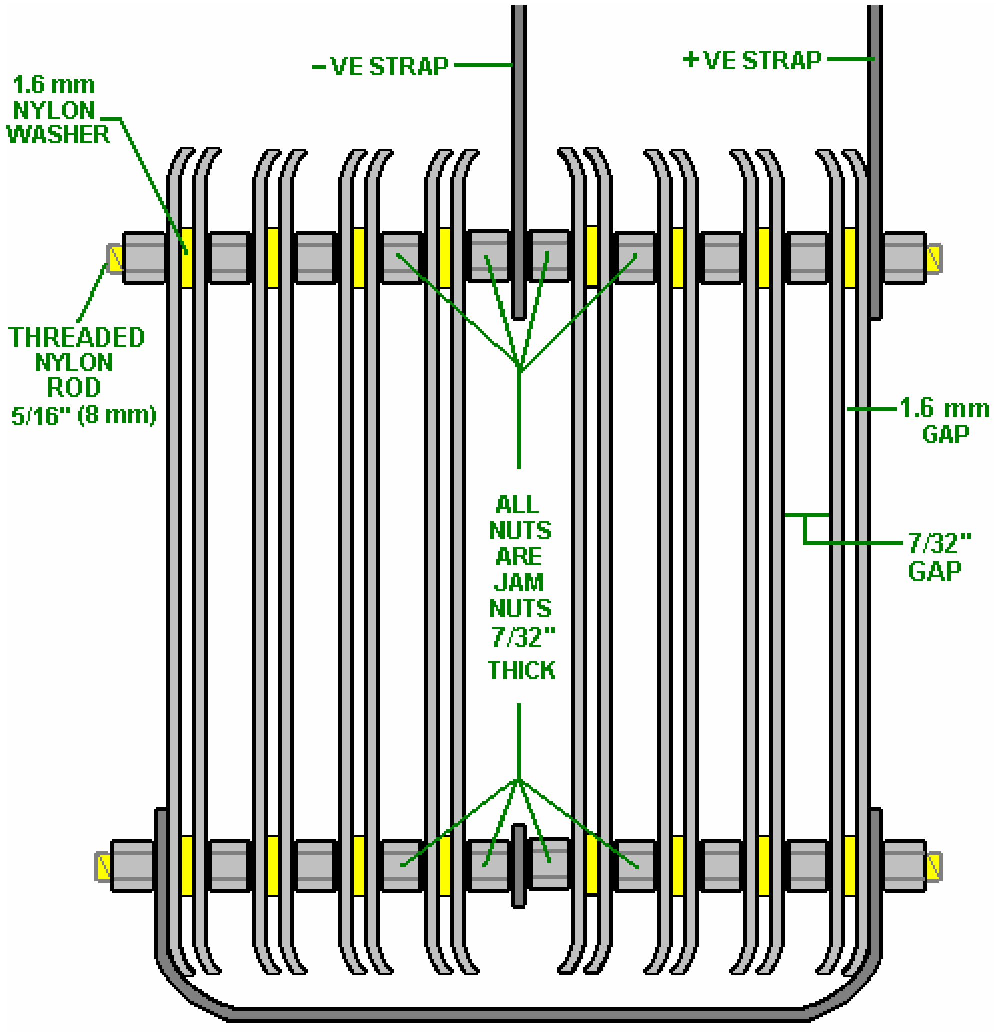

SIDE VIEW OF PLATE ARRAY

Another very practical point is that the stainless steel straps running from the screw cap to the plate array, need to be insulated so that current does not leak directly between them through the electrolyte. The same applies to the strap which runs underneath the plates. This insulating is best done with shrink-wrap. Alternatively, good quality tool dip (McMaster Carr part number 9560t71) is an effective method, but if neither of these methods can be used, then the insulating can be done by wrapping the straps in electrical insulating tape. Using that method, the tape is wrapped tightly around the straps, being stretched slightly as it is wrapped. The section running underneath the covers is insulated before the array is assembled.

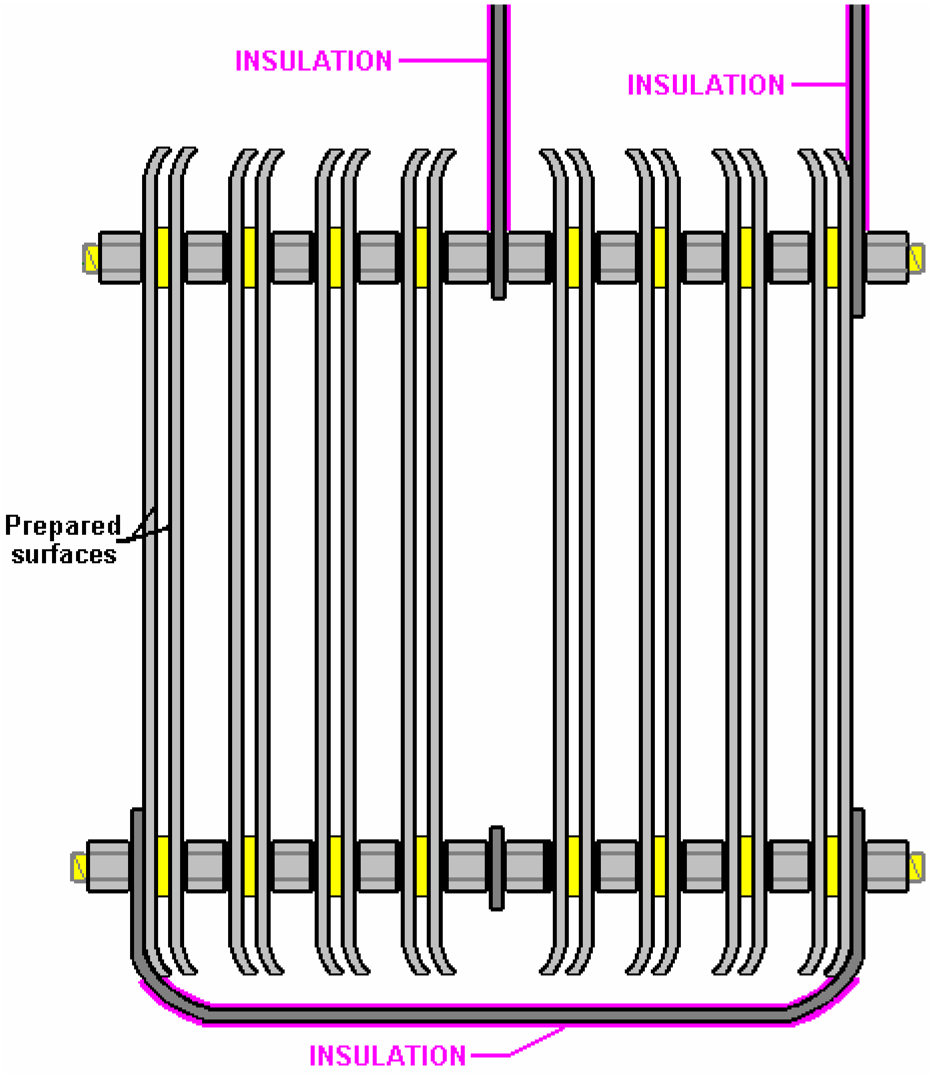

The PVC housing for the booster has two small-diameter angle pipe fittings attached to it and a piece of clear plastic tubing placed between them so that the level of the electrolyte can be checked without removing the screw cap. The white tube on the other side of the booster is a compact bubbler which is glued directly to the body of the booster using super-glue in order to produce a single combined booster/bubbler unit. The bubbler arrangement is shown here, spread out before gluing in place as this makes the method of connection easier to see.

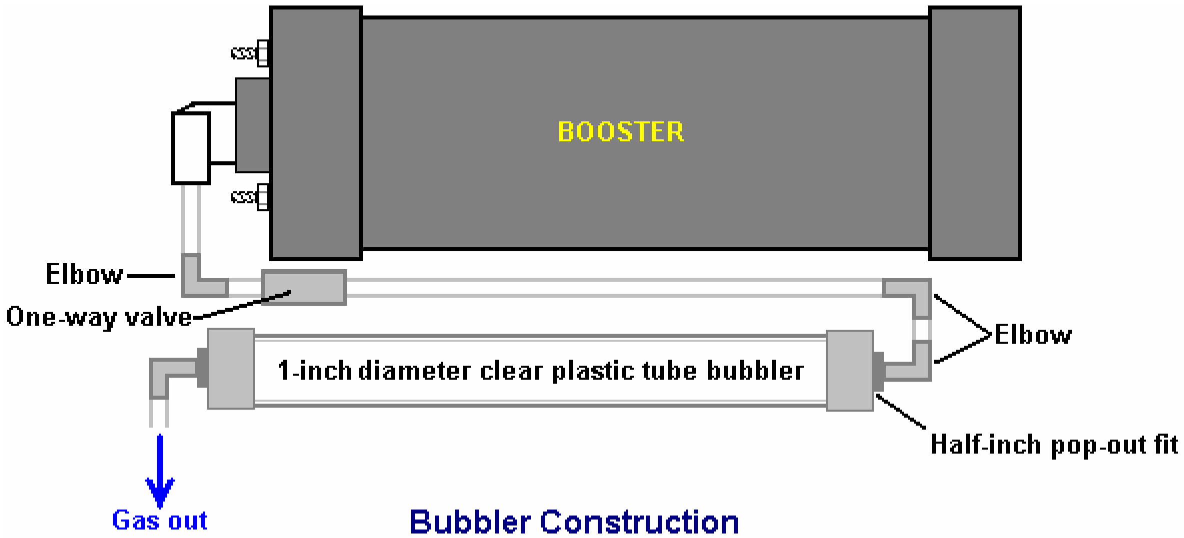

Bubbler Construction

The half-inch diameter elbows at the ends of the one-inch diameter bubbler tube have their threads coated with silicone before being pushed into place. This allows both of them to act as pressure-relief pop-out fittings in the unlikely event of the gas being ignited. This is an added safety feature of the design.

This booster is operated with a solution of Potassium Hydroxide also called KOH or Caustic Potash which can be bought from various suppliers such as:
http://www.essentialdepot.com/servlet/the-13/2-lbs-Potassium-Hydroxide/Detail
http://www.organic-creations.com/servlet/the-653/caustic-potassium-hydroxide-KOH/Detail
http://www.aaa-chemicals.com/pohy2posa.html or
http://www.nuscentscandle.com/PHFLAKES.html To get the right amount in the booster, I fill the booster to its normal liquid level with distilled water and add the Hydroxide a little at a time, until the current through the booster is about 4 amps below my chosen working current of 20 amps. This allows for the unit heating up when it is working and drawing more current because the electrolyte is hot. The amount of KOH is typically 2 teaspoonfuls. It is very important to use distilled water as tap water has impurities in it which make a mess which will clog up the booster. Also, be very careful handling potassium hydroxide as it is highly caustic. If any gets on you, wash it off immediately with large amounts of water, and if necessary, use some vinegar which is acidic and will offset the caustic splashes.

The completed booster usually looks like this:

But, it can be built using different materials to give it a cool look:

And attached to a cool bike:

The final important thing is how the booster gets connected to the engine. The normal mounting for the booster is close to the carburettor or throttle body so that a short length of piping can be used to connect the booster to the intake of the engine. The connection can be to the air box which houses the filter, or into the intake tube. The closer to the butterfly valve the better, because for safety reasons, we want to reduce the volume of hydroxy gas hanging around in the intake system. You can drill and tap a 1/4" (6 mm) NPT fitting into the plastic inlet tubing with a barbed end for connecting the 1/4" (6 mm) hose.

The shorter the run of tubing to the air ductwork of the engine, the better. Again, for safety reasons, we want to limit the amount of unprotected hydroxy gas. If a long run of 3 feet (1 metre) or more must be used due to space constraints, then it would be a good idea to add another bubbler at the end of the tube, for additional protection. If you do this, then it is better to use a larger diameter outlet hose, say 3/8" or 5/16" (10 mm or 8 mm).

If you don't have the necessary tools or workspace, then I will make one of these boosters for you. You can see the details on the Smack's web site at **http://www.smacksboosters.110mb.com**. The parts needed to build this booster with it's bubbler can be found locally or ordered from web sites.

Powering your Booster

Use wire and electrical hardware capable of handling 20 amps DC, no less. Overkill is OK in this situation, so I recommend using components that can handle 30 amps. Run your power through your ignition circuit, so that it only runs when the vehicle is on. A 30 amp relay should be used to prevent damaging the ignition circuit which may not be designed for an extra 20 amp draw. Make sure to use a properly rated fuse, 30 amps is ideal. You can use a toggle switch if you like for further control. As an added safety feature, some like to run an oil pressure switch to the relay as well, so the unit operates only when the engine is actually running. It is very important that all electrical connections be solid and secure. Soldering is better than crimping. Any loose connections will cause heat and possibly a fire, so it is up to you to make sure those connections are of high quality. They must be clean and tight, and should be checked from time to time as you operate the unit just to be sure the system is secure.

Adjusting the Electrolyte

Fill your booster with distilled water and NaOH (sodium hydroxide) or KOH (potassium hydroxide) **only**. No tap water, salt water or rainwater! **No table salt or baking soda!** These materials will permanently damage the booster!

First, fill the booster with distilled water about 2" from the top. Add a teaspoon of KOH or NaOH to the water and then slide the top into place. Do not tighten it for now, but leave the top loose and resting in place. Connect your 12V power supply to the leads and monitor the current draw of the unit. You want 16 amps flowing when the booster is cold. As the water heats up over time, the current draw will increase by around 4 amps until it reaches about 20 amps, and this is why you are aiming for only 16 amps with a cold system.

If the current is too high, dump out some electrolyte and add just distilled water. If the current is too low, add a pinch or two at a time of your catalyst until the 16 amps is reached. Overfilling your booster will cause some of the electrolyte to be forced up the output tube, so a liquid level tube was added to monitor electrolyte level.

The booster generally needs to be topped off once a week, depending on how long it is in operation. Add distilled water, then check your current draw again. You may observe a drop in current over the course of a few refills, and this is normal. Some of the catalyst escapes the cell suspended in water vapour droplets, so from time to time you may need to add a pinch or two. The water in the bubbler acts to scrub this contaminant out of the gas as well. I highly recommend installing an ammeter to monitor current draw as you operate your booster.

Mounting the Booster

Choose a well ventilated area in the engine compartment to mount your booster. Since every vehicle design is different, I leave it up to you to figure out the best method to mount it. It must be mounted with the top orientated upwards. Large 5" diameter hose clamps work well, but do not over tighten them or the PVC may deform. I recommend mounting the booster behind the front bumper in the area usually present between it and the radiator. Support the weight of the unit from the bottom with a bracket of your design, then use two hose clamps to secure the unit, one near the top and one near the bottom. Never install the unit in the passenger compartment for safety reasons.

Output hose and Bubbler

The bubbler on the side of the unit should be filled about 1/3 to 1/2 full of water - tap water is fine for the bubbler. The check valve before the bubbler is there to prevent the bubbler water from being sucked back into the booster when it cools and the gases inside contract. **Make sure the bubbler level is maintained at all times**. **Failure to do so could result in an unwanted backfire explosion**. That water inside the bubbler is your physical shield between the stored hydroxy volume in the generator and the intake of your engine. Install the output hose as close to the carburettor/throttle body as close as possible by making a connection into the intake tube/air cleaner.

Try to make the hose as short as possible to reduce the amount of gas volume it contains. I recommend using the same type of 1/4" poly hose that is used on the unit.

Here is a list of the parts needed to construct the booster and bubbler if you decide to build it yourself rather than buying a ready-made unit:

The Main Parts Needed

Part	Quantity	Comment
4-inch diameter PVC pipe 12-inches long	1	Forms the body of the booster
4-inch diameter PVC pipe end-cap	1	Closes the bottom of the booster
4-inch diameter PVC pipe screw cap	1	The top of the booster
90-degree Quick Connect Outlet fitting	1	3/8" O.D. Tube x 1/4" NPT from Hardware store
Level indicator Nylon barbed tube fitting	2	1/4" Tube x 1/8" NPT Part Number 2974K153 or from your local hardware store
Quarter-inch I.D. Poly sight tube	8”	Water-level indicator tubing - Hardware store
Stainless steel switch covers	16	The plate array components
Stainless steel straps 12-inches long	2	The electrical connections to the plates
3/4" Inside Diameter Clear poly tube	12-inch	From your local hardware store
5/16” stainless steel bolts 1.25” long	2	Electrical strap connection to the top cap
5/16” stainless steel nuts & washers	6 each	To fit the steel bolts in the cap
5/16” diameter nylon threaded rod	8” min.	Nylon Threaded Rod 5/16"-18 Thread. McMaster Carr Part No 98831a030
5/16” inch nylon washers 1.6 mm thick	1-pack	Nylon 6/6 Flat Washer 5/16", Pack of 100 McMaster Carr Part No 90295a160
5/16”-18 s/s jam nuts (7/32" thick)	20	McMaster Carr Part No 91841A030
90 degree Bubbler Fittings	2	1/4" Barbed Tube 1/2" NPT. McMaster Carr Part No 2974K156
Check valve	1	1/4" tube, McMaster Carr Part No 47245K27 or from your local Hardware store
PVC glue	1 tube	Same colour as the PVC pipe if possible
5/16" Neoprene sealing washer	2	McMaster Carr Part No 94709A318 or from your local Hardware store
Tool dip – 14.5 oz	1	McMaster Carr Part No 9560t71
Optional: Light Emitting Diode	1	10 mm diameter, red, with panel-mounting clip
Quarter-watt resistor	1	470 ohm (code bands: Yellow, Purple, Brown)

Now, having shown how this very effective booster and bubbler are constructed, it should be pointed out that if you use it with a vehicle fitted with an Electronic Control Unit which monitors fuel injection into the engine, then the fuel-computer section will offset the gains and benefits of using this, or any other, booster. The solution is not difficult, as the fuel-computer can be controlled by adding in a little circuit board to adjust the sensor signal fed to the computer from the oxygen sensor built into the exhaust of the vehicle. Ready-built units are available for this or you can make your own. If you want to make your own, then the web site document http://www.free-energy-info.com/D17.pdf shows you how and as well, points to Eagle-Research, the suppliers of alternative, ready-made units, also stocked by The Hydrogen Garage.

Quite an amount of testing and experimenting has been carried out by many of the people who have made copies of this booster and two variations which have been found to be helpful are shown here:

Firstly, in spite of the very restricted space inside the housing, it is possible to introduce two extra wall plates, one at each end of the plate stack. These plates are spaced 1.6 mm apart using plastic washers and this triple-plate group causes an extra voltage drop across the sub-set of three plates. The construction is then as shown here:

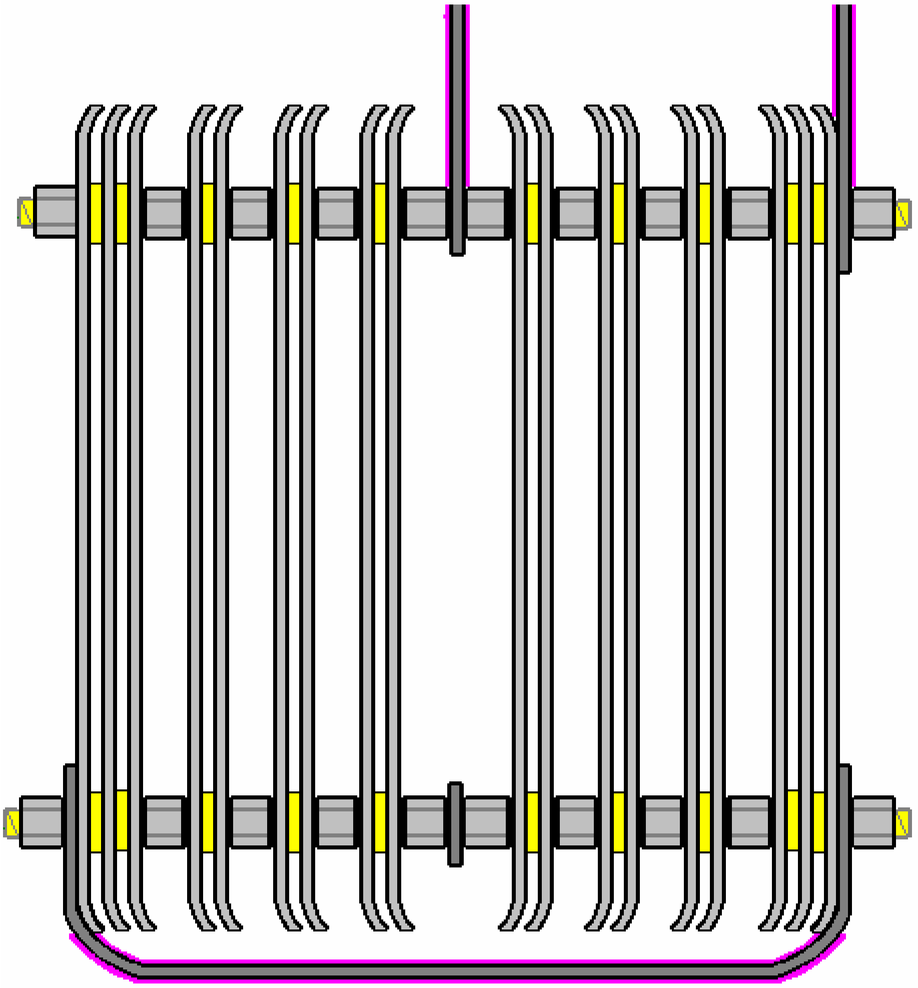

The second modification is wrapping the plate array in 4-inch shrink-wrap. This wrapping extends around the sides of the plates and helps by cutting out some of the unwanted electrical leakage paths through the electrolyte. This arrangement is shown here:

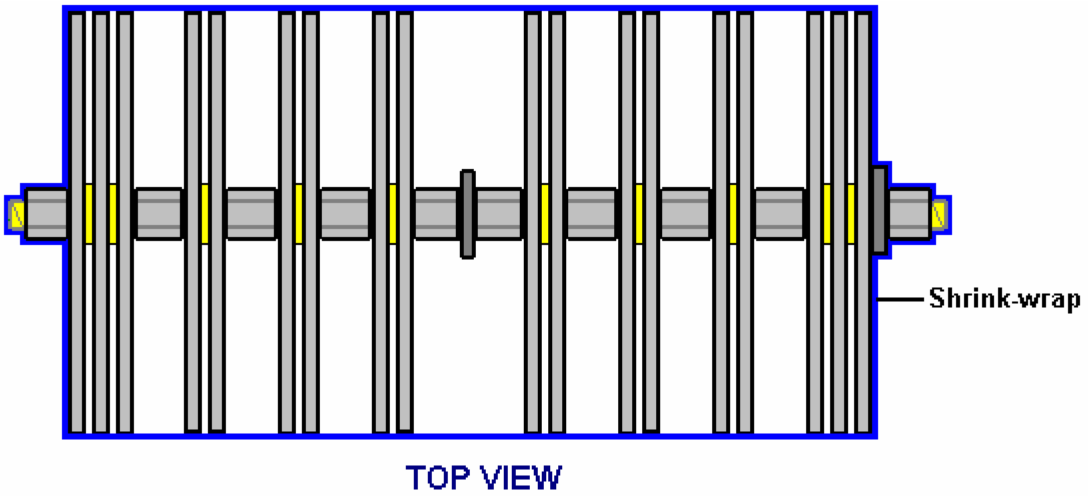

Enjoy using this booster and do your part in cutting greenhouse gas emissions.

Eletrik

Smack's Booster is a trademarked name, and the design is patent-pending but remains fully disclosed for public use.

Date of release of this copy of the document: 3rd July 2008

Background Information

Many people find the plate arrangement of the Smack's Booster, rather difficult to understand, so this additional section is just to try to explain the operation of the cell. This has nothing to do with actually building or using a Smack's Booster, so you can just skip this section without missing anything.

The Smack's Booster plate arrangement does look confusing. This is mainly because Eletrik has squeezed two identical sets of plates into one container as shown here:

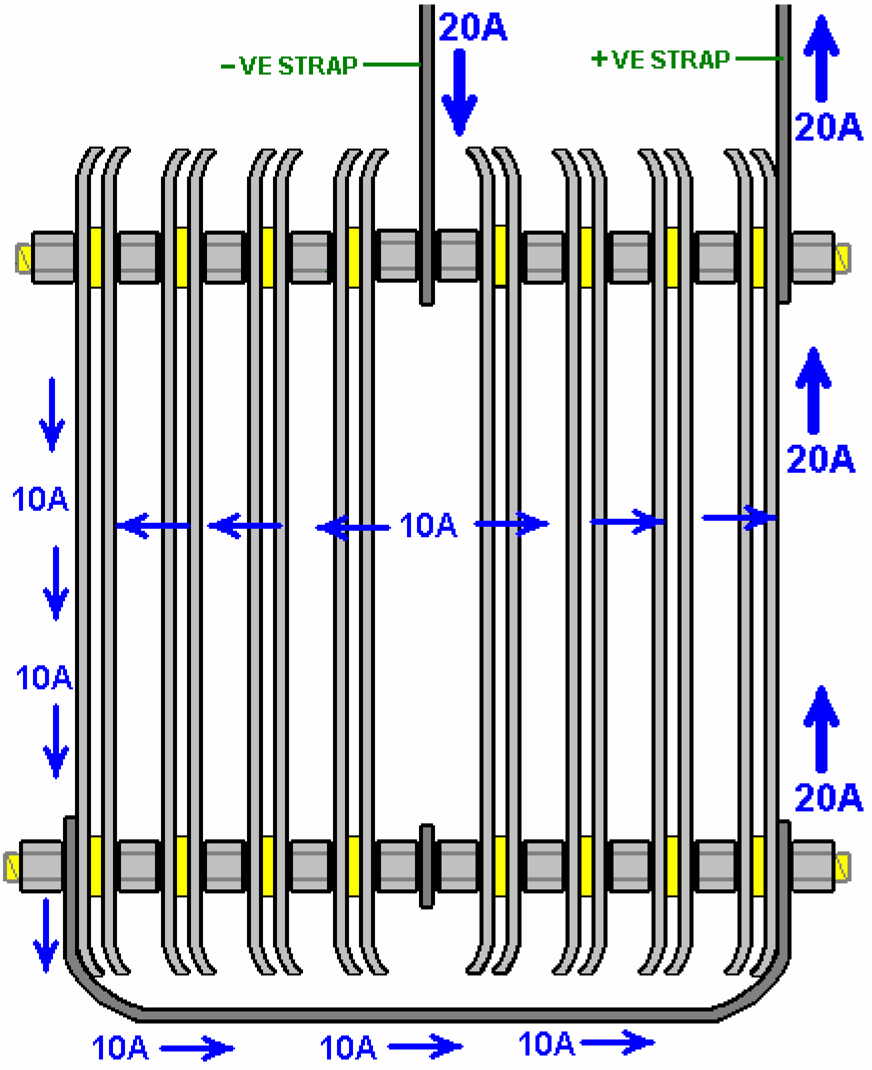

This arrangement is two identical sets of plates positioned back-to-back. To make it easier to understand the operation, let's just consider just one of the two sets of plates.

Here, you have just the electrical Plus linked to the electrical Minus by a set of four pairs of plates in a daisy chain (the technical term is: connected "in series" or "series-connected"). Easily the most electrically efficient way for doing this is to exclude all possible current flow paths through the electrolyte by closing off around the edges of all the plates and forcing the current to flow through the plates and only through the plates.

Unfortunately, this is very difficult to do in a cylindrical container and it has the disadvantage that it is difficult to keep the unit topped up with water and difficult to maintain the electrolyte level just below the top of the plates.

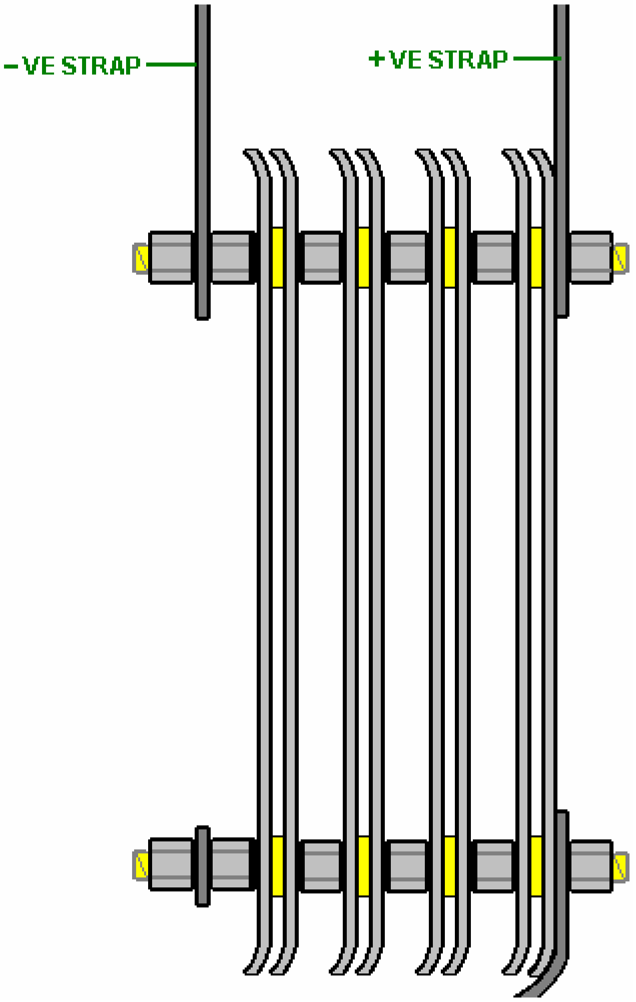

So, a compromise is reached where the current flow around and past the plates is combatted by strategic spacing of the plates:

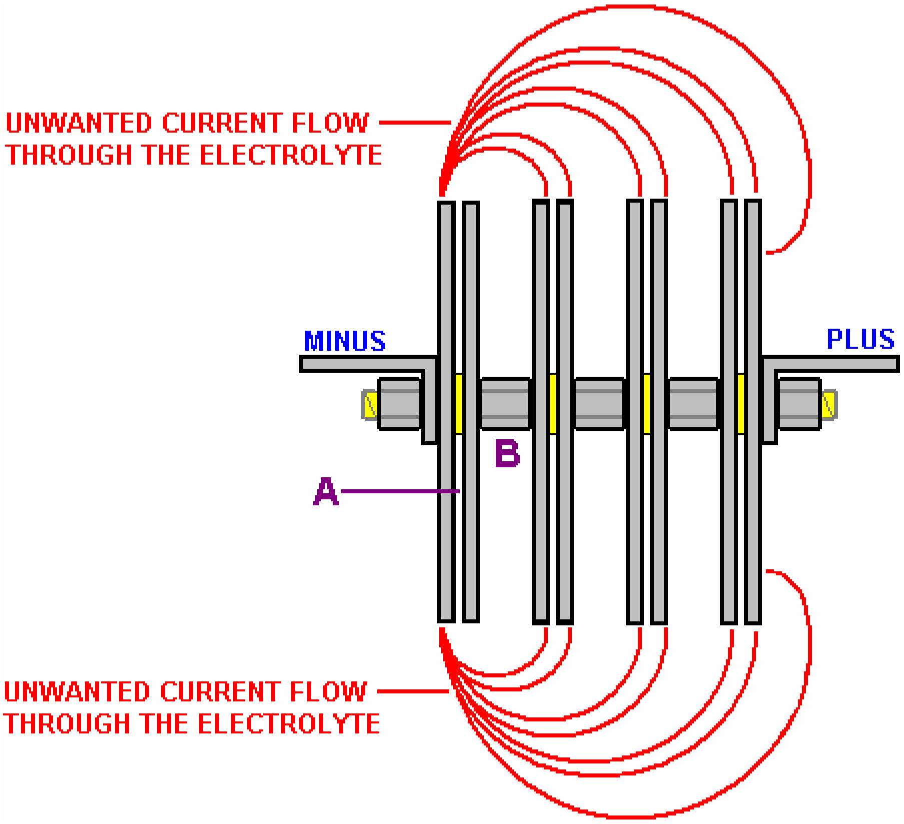

This diagram shows the way that the plates are connected. The red lines show paths of unwanted current flow which produce almost no gas. This wasted current flow is opposed by the useful current flow across gap "**A**" in the diagram.

To favour the flow across the 1.6 mm gap "**A**", an attempt is made to make the waste flows as long as possible by comparison. This is done by the gap "**B**" being made as large as possible, limited only by the size of the booster housing.

The voltage applied to the cell (13.8 volts when the engine is running) divides equally across the four plate pairs, so there will be one quarter of that voltage (3.45 volts) across each plate pair.

If you look again at the original diagram, you will see that there are two of these sets of four plate pairs, positioned back-to-back in the container. Each of these acts separately, except for the fact that there are additional current leakage paths through the electrolyte between the plates of one set and the plates of the second set.

There is a steady voltage drop progressively across the array of plates. Remember that they are connected in pairs in the middle due to the metal-to-metal connection created by the steel nuts between the plates:

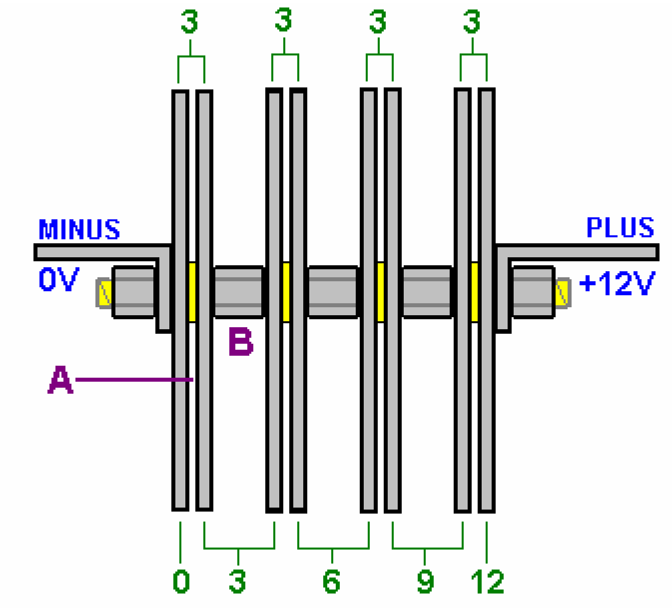

VOLTAGE DROPS FOR A 12-VOLT SUPPLY

It is often difficult for people to get the hang of how the voltage drops across a chain of resistors (or matrix of plates). The voltages are relative to each other, so each plate pair thinks that it has a negative electrical connection on one plate and a positive connection on the other plate.

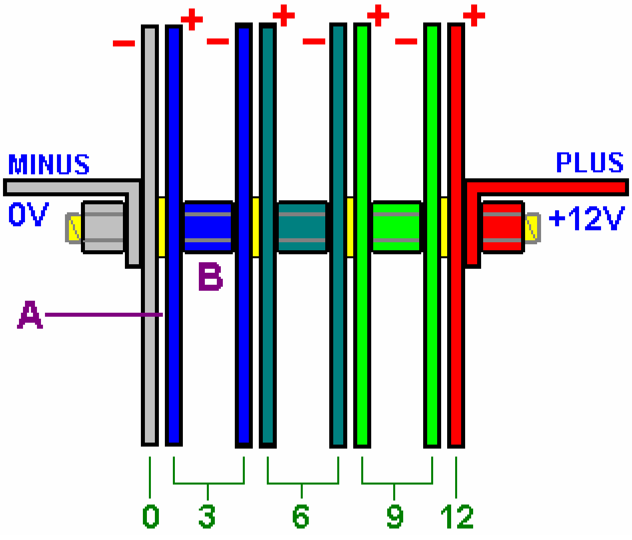

For example, if I am standing at the bottom of a hill and my friend is standing ten feet up the hill, then he is ten feet above me.

If we both climb a hundred feet up the mountain and he is at a height of 110 feet and I am at a height of 100 feet, he is still ten feet above me.

If we both climb another hundred feet up the mountain and he is at a height of 210 feet and I am at a height of 200 feet, he is still ten feet above me. From his point of view, I am always ten feet below him.

The same thing applies to these plate voltages. If you one plate is at a voltage of +3 volts and the plate 1.6 mm away from it is at a voltage of +6 volts, then the 6 volt plate is 3 volts more positive than the 3 volt plate, and there is a 3 volt difference across the gap between the two plates. The first plate looks to be 3 volts negative to the 6 volt plate when it “looks” back at it.

You can also say that the +3 volt plate is 3 volts lower than the +6 volt plate, so from the point of view of the +6 volt plate, the +3 volt plate is 3 volts lower down than it, and it therefore “sees” the other plate as being at -3 volts relative to it.

In the same way, my friend sees me as being at -10 feet relative to him, no matter what height we are on the mountain. It is all a matter of being "higher up" whether in terms of height above sea level on a mountain or in terms of higher up in voltage inside a booster.

Now, having shown how this booster and bubbler are constructed, it should be pointed out that if you use it with a vehicle fitted with an Electronic Control Unit which monitors fuel injection into the engine, then the fuel-computer section will offset the mpg gains and benefits of using this, or any other, booster. The solution is not difficult, as the fuel-computer can be controlled by adding in a little circuit board to adjust the sensor signal fed to the computer from the oxygen sensor built into the exhaust of the vehicle, to allow for the improved quality of the fuel being burnt in the engine. This is necessary because the exhaust will be so much cleaner than it used to be, that the computer will think that the engine is being starved of fuel (which it most definitely isn’t. With a booster, the engine runs cleaner, cooler and more smoothly and it has enhanced pulling power called “torque”. Ready-built units are available for correcting the oxygen sensor signal for the improved situation, or alternatively, you can make your own.

Dealing with the Vehicle Computer

When an mpg. improving device such as an electrolyser is fitted to a vehicle, the result does not always produce better mpg. figures. Older vehicles which are fitted with a carburettor will see an immediate improvement. This is not the case for more recent vehicles which come with computer control of the fuel sent to the engine.

When an electrolyser is attached to the engine, it causes the fuel burn inside the cylinders to be greatly improved, with a corresponding improvement in engine performance. Unfortunately, the fuel computer is expecting the same amount of unburnt oxygen to come out of the engine, and when it doesn't detect it, the computer increases the fuel flow rate in an attempt to get back to it's normal, inefficient method of running. That action cancels the mpg improvement produced by the electrolyser unless something is done to adjust the operation of the computer.

In the most simple terms, most vehicles which have an Electronic Control Unit ("ECU") to control the fuel flow are fitted with one of two types of exhaust sensor. The majority have a "narrowband" sensor while the remainder have a "wideband" sensor. The ideal mix of air to fuel is considered to be 14.7 to 1. A narrowband sensor only responds to mixtures from about 14.2 to 1 through 14.9 to 1. The sensor operates by comparing the amount of oxygen in the exhaust gas to the amount of oxygen in the air outside the vehicle and it generates an output voltage which moves rapidly between 0.2 volts where the mixture is too lean, and 0.8 volts when it passes below the 14.7 to 1 air/fuel mix point where the mixture is too rich (as indicated by the graph shown below). The ECU increases the fuel feed when the signal level is 0.2 volts and decreases it when the signal voltage is 0.8 volts. This causes the signal voltage to switch regularly from high to low and back to high again as the computer attempts to match the amount of "too lean" time to the amount of "too rich" time.

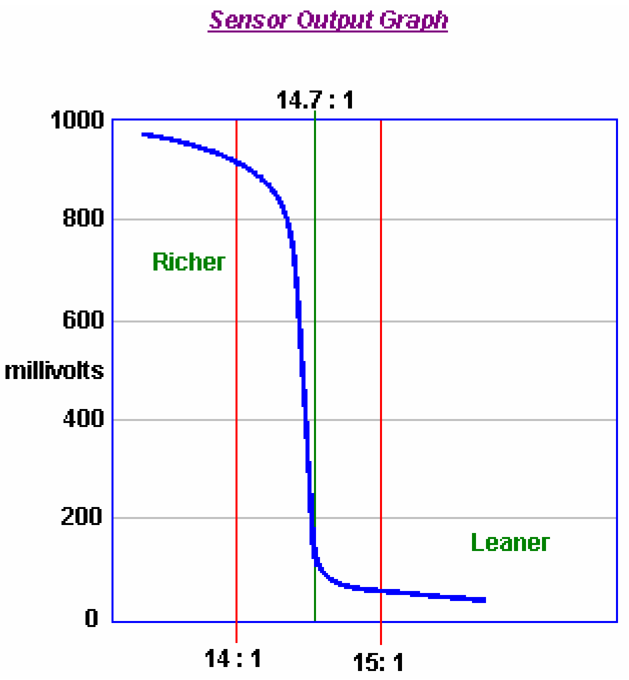

A simple control circuit board can be added to alter the sensor signal and nudge the fuel computer into producing slightly better air/fuel mixes. Unfortunately, there is a severe downside to doing this. If, for any reason, the fuel mix is set too high for an extended period, then the excess fuel being burnt in the catalytic converter can raise the temperature there high enough to melt the internal components of the converter. On the other hand, if the circuit board is switched to a mix which is too lean, then the engine temperature can be pushed high enough to damage the valves, which is an expensive mistake.

Over-lean running can occur at different speeds and loads. Joe Hanson recommends that if any device for making the mix leaner is fitted to the vehicle, then the following procedure should be carried out. Buy a "type K" thermocouple with a 3-inch stainless steel threaded shank, custom built by ThermX Southwest of San Diego. This temperature sensor can measure temperatures up to 1,800 degrees Fahrenheit (980 degrees Centigrade). Mount the thermocouple on the exhaust pipe by drilling and tapping the pipe close to the exhaust manifold, just next to the flange gasket. Take a cable from the thermocouple into the driver's area and use a multimeter to show the temperature.

Drive the vehicle long enough to reach normal running temperature and then drive at full speed on a highway. Note the temperature reading at this speed. When a leaner mix is used, make sure that the temperature reading under exactly the same conditions does not exceed 180 degrees Fahrenheit (100 degrees Centigrade) above the pre-modification temperature.

David Andruczyk recommends an alternative method of avoiding engine damage through over-lean fuel/air mixtures, namely, replacing the narrowband oxygen sensor with a wideband sensor and controller. A wideband oxygen sensor reads a very wide range of Air/Fuel ratios, from about 9 to 1 through 28 to 1. A normal car engine can run from about 10 to 1 (very rich) to about 17.5 to 1 (pretty lean). Maximum engine power is developed at a mix ratio of about 12.5 to 1. Complete fuel combustion takes place with a mix of about 14.7 to 1, while the mix which gives minimum exhaust emissions is slightly leaner than that.

Unlike narrowband sensors, wideband sensors need their own controller in order to function. There are many of these units being offered for sale for retro-fitting to existing vehicles which have just narrowband oxygen sensor systems. David's personal recommendation is the Innovate Motorsports LC-1 which is small, and uses the very reasonably priced LSU-4 sensor. This wideband controller can be programmed. Most controllers have the ability to output two signals, the wideband signal suitable for running to a gauge or new ECU, plus a synthesised narrowband signal which can feed an existing ECU. The trick is to install a wideband sensor, with the LC-1 controller and then reprogram it to **shift** the narrowband output to achieve a leaner mix as shown here:

Actual Air/Fuel Mix	Wideband Output	Original Narrowband Output	Shifted Narrowband Output
9 to 1	9 to 1	Mix is too Rich	Mix is too Rich
10 to 1	10 to 1	Mix is too Rich	Mix is too Rich
11 to 1	11 to 1	Mix is too Rich	Mix is too Rich
12 to 1	12 to 1	Mix is too Rich	Mix is too Rich
13 to 1	13 to 1	Mix is too Rich	Mix is too Rich
14 to 1	14 to 1	Mix is too Rich	Mix is too Rich
14.6 to 1	14.6 to 1	Mix is too Rich	Mix is too Rich
14.8 to 1	14.8 to 1	Mix is too Lean	Mix is too Rich
15 to 1	15 to 1	Mix is too Lean	Mix is too Rich
15.5 to 1	15.5 to 1	Mix is too Lean	Mix is too Lean
16 to 1	16 to 1	Mix is too Lean	Mix is too Lean
18 to 1	18 to 1	Mix is too Lean	Mix is too Lean

This system allows you to set the narrowband "toggle point" very precisely on an exact chosen air/fuel ratio. This is something which it is nearly impossible to do accurately with a circuit board which just shifts a narrowband oxygen signal as you just do not know what the air/fuel ratio really is with a narrowband sensor.

However, for anyone who wants to try adding a circuit board to alter a narrowband sensor signal to produce a leaner mix on a vehicle, the following description may be of help. It is possible to buy a ready-made circuit board, although using a completely different operating technique, from the very reputable Eagle Research, via their website: http://www.eagle-research.com/products/pfuels.html where the relevant item is shown like this:

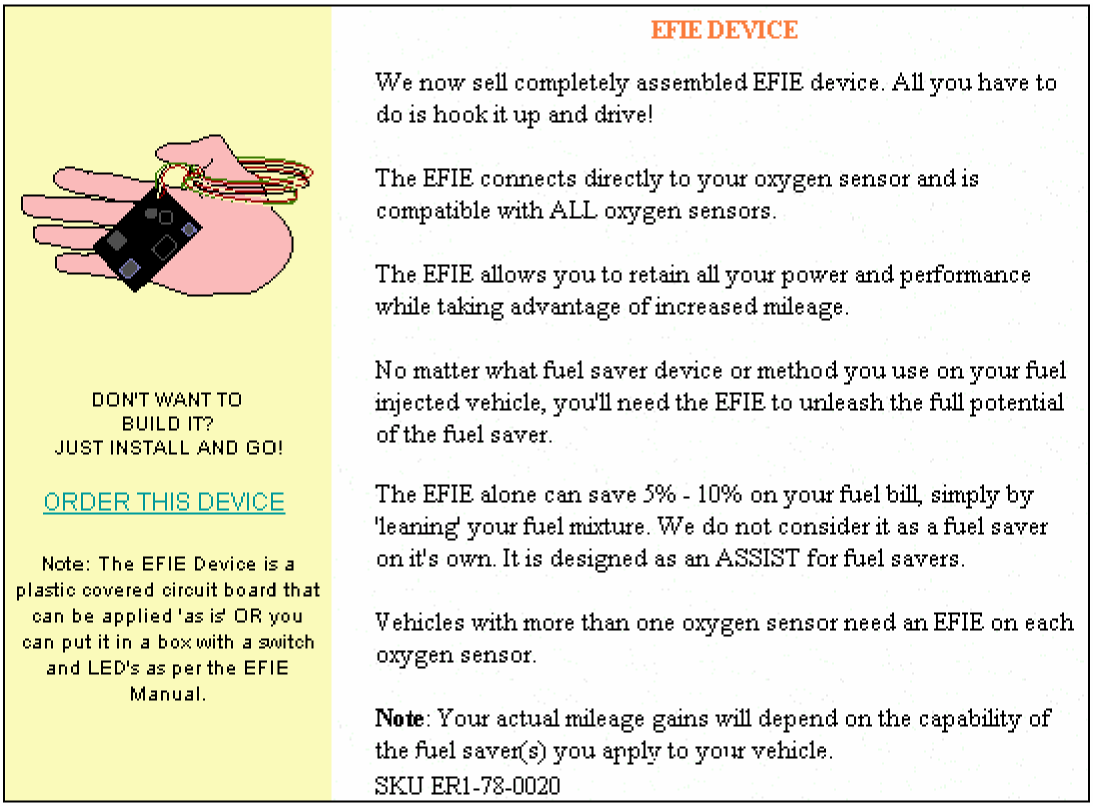

DON'T WANT TO
BUILD IT?
JUST INSTALL AND GO!

ORDER THIS DEVICE

Note: The EFIE Device is a plastic covered circuit board that can be applied 'as is' OR you can put it in a box with a switch and LED's as per the EFIE Manual.

EFIE DEVICE

We now sell completely assembled EFIE device. All you have to do is hook it up and drive!

The EFIE connects directly to your oxygen sensor and is compatible with ALL oxygen sensors.

The EFIE allows you to retain all your power and performance while taking advantage of increased mileage.

No matter what fuel saver device or method you use on your fuel injected vehicle, you'll need the EFIE to unleash the full potential of the fuel saver.

The EFIE alone can save 5% - 10% on your fuel bill, simply by 'leaning' your fuel mixture. We do not consider it as a fuel saver on it's own. It is designed as an ASSIST for fuel savers.

Vehicles with more than one oxygen sensor need an EFIE on each oxygen sensor.

Note: Your actual mileage gains will depend on the capability of the fuel saver(s) you apply to your vehicle.
SKU ER1-78-0020

This unit generates a small voltage, using a 555 timer chip as an oscillator, rectifying the output to give a small adjustable voltage which is then added to whatever voltage is being generated by the oxygen sensor. This voltage is adjusted at installation time and is then left permanently at that setting. Eagle Research also offer for sale, a booklet which shows you how to build this unit from scratch if you would prefer to do that.

I understand that at the present time, the purchase price of this device is approximately US $50, but that needs to be checked if you decide to buy one. Alternatively, instructions for building a suitable equivalent circuit board are provided later on in this document.

If you wish to use a circuit board with a narrowband oxygen sensor, then please be aware that there are several versions of this type of sensor. The version is indicated by the number of connecting wires:

Those with **1** wire, where the wire carries the signal and the case is ground (zero volts)
Those with **2** wires, where one wire carries the signal and the other wire is ground.
Those with **3** wires, where 2 (typically slightly thicker) wires are for a sensor heater, and
    1 for the signal while the case is ground.
Those with **4** wires (the most common on current model cars), where there are
    2 (slightly heavier) for the sensor heater,
    1 for the signal , and
    1 for the signal ground.
(Sensors with **5** wires are normally wideband devices.)

Look in the engine compartment and locate the oxygen sensor. If you have difficulty in finding it, get a copy of the Clymer or Haynes Maintenance Manual for your vehicle as that will show you the position. We need to identify the sensor wire which carries the control signal to the fuel control computer. To do this, make sure that the car is switched off, then

For **3** and **4** wire sensors:
    Disconnect the oxygen sensor wiring harness,
    Set a multimeter to a DC voltage measurement range of at least 15 volts,
    Turn on the ignition and probe the socket looking for the two wires that provide 12 volts.
    These are the heater wires, so make a note of which they are,
    Shut the ignition off, and reconnect the oxygen sensor.

The two remaining wires can now be treated the same as the wires from a 2-wire sensor, one will carry the sensor signal and one will be the signal ground (for a single wire sensor, the signal ground will be the engine block). Jesper Ingerslev points out that the Ford Mustang built since 1996 has 2 oxygen sensors per catalytic converter, one before the converter and one after. Some other vehicles also have this arrangement. With a vehicle of this type, the circuit board described here should be attached to the sensor closest to the engine.

Find a convenient place along the wires. Don't cut these wires, you will cut the sensor wire here at a later time, but not now. Instead, strip back a small amount of the insulation on each wire. Be careful to avoid the wires short-circuiting to each other or to the body of the vehicle. Connect the DC voltmeter to the wires (the non- heater wires). Start the engine and watch the meter readings. When the engine is warmed up, if the oxygen sensor is performing as it should (i.e. no engine check lights on), the voltage on the meter should begin toggling between a low value near zero volts and a high value of about 1 volt. If the meter reading is going negative, then reverse the leads. The black multimeter lead is connected to the signal 'ground' (zero volts) and the red lead will be connected to the wire which carries the signal from the sensor. Connect a piece of insulated wire to the stripped point of the sensor wire and take the wire to the input of your mixture controller circuit board. Connect a second insulated wire between the signal 'ground' wire, or in the case of a 1-wire sensor, the engine block, and the circuit board zero-volts line. Insulate all of the stripped cables to prevent any possibility of a short-circuit:

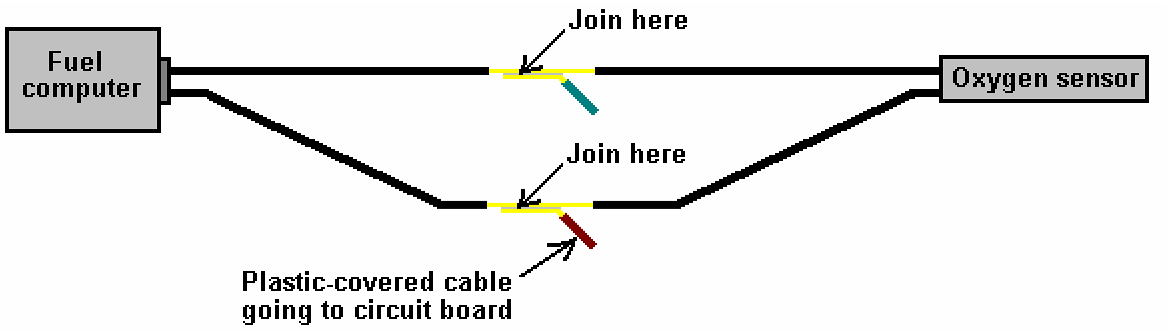

Step 1: Remove a small piece of insulation and join the new cable to the original wire without cutting the original wire

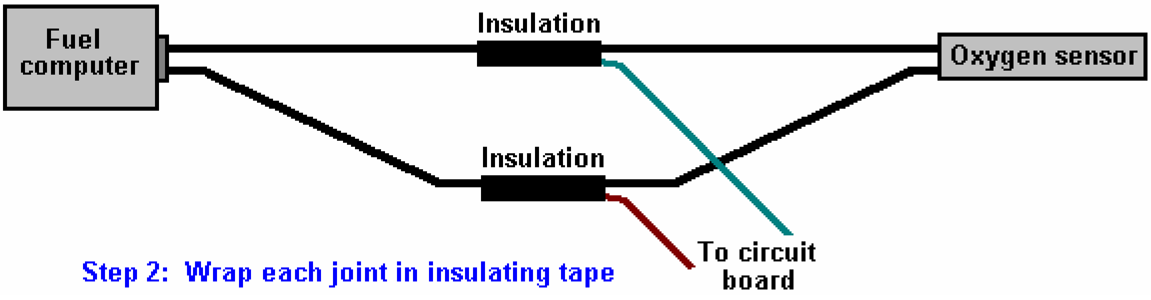

Step 2: Wrap each joint in insulating tape

More specific detail

However, the situation is by no means a simple one which allows a single simple adaption which will work on every vehicle for many years. Les Pearson has been investigating this situation in depth for three years along with a friend who is an Electronics Engineer. Having built and tested EFIEs, the oxygen sensor circuit shown below, several versions of MAP controllers, coolant/air temperature hacks, professional systems, etc. and discovered that many vehicle ECUs ("Electronic Control Units") learnt to adapt to the new conditions and return to the highly inefficient excess fuel injection condition. This return to the original fuel injection is different for each design of ECU and there are many different designs.

Les says: "To understand the solution, first you have to understand the dilemma with all the other ECU control tricks. The EFIEs, MAP adjusters, temp hacks etc. do get good results for a short time, and then the performance deteriorates again. Why should this be? It is because the ECU learns to deal with the new situation with them in place. This is because the ECU knows that the feedback from most of it's controls, and sensor's are not linear, nor should they be. All of the electronics, and adjustment methods used by the Hydrogen On Demand people are linear, and that is not an adequate way to deal with the problem.

For example, we may add a couple of hundred millivolts to the oxygen ("lambda") sensor signal in order to return an unduly rich signal to the ECU, and so make it respond with a lower level of fuel injection. This makes the ECU think that the Air/Fuel Ratio is say, 15:1 or 20:1. Now the mass air maps are all wrong, we need to show less air so that the ECU adds less fuel in order to match the fuel trims. We now need to adjust the ignition timing to take advantage of this combustion change. The problem is that all the EFIEs, MAP/MAF adjusters, and attempts at changing timing by manipulating air temp are a static fixed offset, producing just a single change.

An Air/Fuel Ratio of 20:1 is not appropriate under moderate or heavy acceleration when you don't, and usually can't, add enough hydroxy gas to allow for these conditions. A set 15% to 20% leaner setting across the entire fuel map is not appropriate at all loads, and engine speeds. Adding 50 to 75 degrees F to the air temp is not appropriate when the outside air is already at 110 degrees F. The ECU knows this and makes appropriate changes to it's long-term settings, and so it cancels out the changes which our electronic additions have made.

While it may be OK for an experimenter, and mechanic with all the tools at his disposal to play with these techniques, and retune his engines every week or so in order to get great mileage, it is not realistic to expect the average person to do this. The cost in equipment alone, would undermine any fuel savings. Also, most people don't even change their oil at appropriate intervals.

This was my train of thought as I pondered a solution, and began searching. My search was for a control solution which could firstly, alter the air-flow readings, lambda readings, and ignition timing and secondly, respond to changes in engine speed and engine load. To my surprise I found several products already on the market which are capable of doing this, and which have been available for quite some time. People in the engine-tuning industry have been using them for years. They are custom programmable, piggy-back chips. Several companies make them, and while most do not advertise O2 ("lambda") sensor control, many are quite capable of altering it.

We became a distributor for one brand which seemed to be the best fit for our purposes, and we began testing. The results are perfect. We started with an 2002 Saturn SL. The average mpg for this car started at 26 mpg (highway and city combined). We installed the chip, tested several tuning methods, and found the one which worked best. The car now averages 44-46 mpg. This is not special 'grandma driving' to try, and coax a few extra miles per gallon. This is a courier vehicle for a local printer, and it is driven daily like it was stolen. We have all the same benefits of increased torque (pulling power), better throttle response, etc. The car has been driven around for three months now with our programmed chip installed, and it achieves the mid-40s in mpg all of the time. there are no code changes needed, no start-up problems, no driving problems of any kind whatsoever. If you weren't told, you would never know that hydroxy gas was being added, except for the fact that you can go over 500 miles on a single tank of fuel.

The only problem is that this is definitely not a do-it-yourself solution. You need a laptop computer with proprietary software to tune the chip, and the scanning, and diagnostic equipment to know when you have it tuned correctly. However, I have thought of a do-it-yourself solution. It still requires you to buy a few electronic kits, and you need a lot of know-how, but we are circumventing a highly sophisticated control architecture, so anyone who thinks it will be easy, is delusional. The main item is a Digital Fuel Adjuster or "DFA" kit from JayCar electronics based in Australia. Their website is http://www.jaycar.com. The adjuster kit number is KC5385, and you have to have the hand controller to program it, that kit number is KC5386. At the present time, the Adjuster kit costs USD $49.50, and the controller kit is USD $39.50. The adjuster doesn't have an enclosure supplied, but the controller does. You need one controller and two adjusters. The controller can be reused to program multiple adjusters. Once you have the kits, it will take several days of soldering to build them, and it is definitely not a beginner's first-time project.

After the two adjusters and the controller have been built, the first one is wired in to the MAP/MAF sensor signal as shown in the instructions guide. Next the second DFA is used on the oxygen sensor signal. If there are two oxygen sensors, then the DFA is wired through the common ground for the upstream sensors ONLY. This places the voltage offsets in tandem, which makes it unnecessary to use two DFAs (or EFIEs for that matter) for "lambda" control. Now control has been established over fuel maps, and a "lambda" control which is responsive to engine load has been achieved. I believe that these kits also come with an option to make them responsive to rpm.

For ignition timing, the temperature offsets will probably still be necessary, but now you have a fuel control which if tuned properly, the ECU will not learn its way around. I have found that the maps for "lambda" control are very simple. Tune for the leanest Air/Fuel Ratio appropriate at very low loads, and increase the fuel richness a bit in increments as the load increases. As you get close to full throttle, but before you switch to open-loop operation, your lambda offset should be zero (the stock setting). To tune the air-flow or fuel maps, watch the OBD II scan gauge, and decrease the MAP signal so that your short term fuel trim ("STFT" on a scanner) is no greater than about ± 7% at each load interval. Drive for about 20 minutes, and check that your long term fuel trim ("LTFT") never goes beyond the "7s" either. Now the ECU cannot "see" your changes because the fuel map, and lambda readings "agree" at every load range.

The Jaycar kits are not as sophisticated as the chip sets, but they are about 20% of the cost, if you want to put the time and effort into them. The adjuster itself simply adds to, or subtracts from, whatever voltage runs across them, and it can be set to change that offset value in correspondence to whatever voltage value is present at the signal input pin. You would of course put your TPS signal to the signal input pin. The device itself is very versatile, and could be used for many different applications. If you wanted to use one to control a Pulse-Width Modulator attached to a cell, then that would be possible and it would provide a variable gas rate that responds to changes in engine load. I hope you can put this to good use, and feel free to spread the word around. Perhaps you know someone who could build a similar device or give us a schematic to build one, after looking at a JayCar kit. The only drawback to the kits is that rpm sampling gets a little complex, and while I don't think it is absolutely necessary, it would be beneficial. Although the kits have only 125 data points between the "closed", and "fully open" throttle settings, and do not interpolate between data points, they seem to work very well. The professional chip sets have 96,000 data points between CT ("Closed Throttle"), and WOT ("Wide-Open Throttle"), and they do logically interpolate between set data points. The professional chip sets run about $650 USD programmed, and installed.

I plan to market a pre-programmed chip capable of making **any** hydroxy system work. While I plan to have a profitable venture with the professional pre-programmed architecture, I also believe in the open source do-it-yourself community, which is where I got started. The chips I plan to sell will be a 'plug and play' device. You send me the info on the type of vehicle you are modifying, and the efficiency data of your cell, and I'll be able to send you a chip that will make your ECU work with those conditions. The Do-it-yourself version would be quite time consuming but, would work for less than one quarter of the price.

I think that the "more is better" hydroxy gas idea that a lot of people are stuck in, is seriously flawed. There is definitely a point of diminishing returns. I tune most systems to deliver about 1 lpm. The lower the amperage you can do this at, of course the better. I have found that not only does it take more amperage to produce higher volumes at a less effective rate of return, but it does not add much to the efficiency of the "boosting". With the cells which I build I get 1 lpm of hydroxy gas at about 8 to 10 amps. I'm using direct DC with a 5-cell, 6 plate array, similar to a "Smack's Booster", but with better plate isolation in the bath. We've spent thousands developing fancier, and slightly more efficient cells. We've used PWMs to get better production, and be able to attenuate gas production with duty cycle. We had a really, really advanced system. Then I applied Occam's razor to it. We can make enough gas to support ultra-lean combustion above fairly low load conditions - so what good is it to be able to decrease when you barely make enough already? The PWM does help, and is relatively inexpensive so we kept that component if the customer wants, but we don't change the duty cycle.

The 6 plate "Smacks" style cell works fine. It is small, easy to build, and is efficient enough for the production we need. Engine control was the biggest issue. I can get great mileage with just a little hydroxy gas, if I can control what fuel table the ECU looks at every load range, and rpm. The problem with EFIEs, and MAP/MAF adjusters is that they tell the computer to look at inappropriate fuel tables at higher load ranges. The ECU picks up on that, adjusts it's long-term fuel trims, and goes back to an unmodified state. If I can make the ECU look at very lean tables at cruise, and then more or less unmodified tables at higher loads it never "sees" the trick. Since we only make enough hydroxy gas to affect low loads anyway, that is all I need to be concerned with. You could think of it as an ultra-lean cruise mode: when you aren't at low cruise you aren't changing anything. When you are cruising you are running at a very lean Air-Fuel Ratio. So far, it works great.

The super fancy system that used a PWM with a duty-cycle controlled by our chip, and made up to 3 lpm at 20amps would have cost over USD $2500 just for the parts, and equipment to cover production cost, and turn a profit, and it only gained us about 10% efficiency. The system we are working on now should be less than USD $1500 as a 'turn-key' system. Our little Saturn just came back at 88mpg on a carefully driven run with this system. It typically gets high 40s to mid 50s in mpg under normal driving conditions.

I have tried adding just 0.6 lpm or so, and letting the ECU trim out to compensate. This has given me mixed results. Sometimes I can get 25% to 30% reduction in consumption, and sometimes it makes no difference at all. It has a lot to do with the ECU's programming, and the driver's habits. I don't really know why it doesn't work all the time theoretically it should. The hydroxy gas makes the petrol more volatile so you should be getting more energy per gram of fuel. That should correlate to higher exhaust gas temperatures, and the ECU should see that and take away some fuel, but sometimes it does just the opposite. The ECU sees a lean condition due to increased Exhaust Gas Temperature at the manifold, and lower temperature at the catalytic converter, and so it richens up the air-fuel mix.

Another possible option that I have not explored would be an EFIE designed to change it's output to a set voltage controlled by the vehicle's throttle position sensor. The challenge here is that it is not a linear change. The steps between load sites would not be equal. They would need to be able to be manually set for what the application needed. The DFAs allow you to do this, and can add voltage just like an EFIE. You can use one DFA for MAP/MAF control, and one for oxygen sensor control. So even with a modified EFIE you would need a DFA or something similar to provide non-linear MAP/MAF control". You can contact Les at lespearson (at) hotmail (dot) com.

Construction

If you wish to build an oxygen sensor controller circuit, then here is a suggestion as to how you might do it. This description assumes very little knowledge on the part of the reader, so I offer my apologies to those of you who are already expert in these matters. There are many different ways to design and construct any electronic circuit and each electronics expert will have his own preferred way. In my opinion, the way shown here is the easiest for a newcomer to understand and build with the minimum of tools and materials.

The circuit shown here, is taken from the website http://better-mileage.com/memberadx.html, and is discussed here in greater detail. This circuit can be constructed on a printed circuit board or it can be built on a simple single-sided stripboard as shown here:

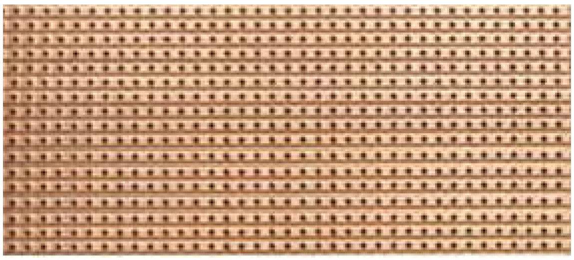

Stripboard (often called "Veroboard"), has copper strips attached to one side of the board. The copper strips can be broken where it is convenient for building the circuit. Component leads are cut to length, cleaned, inserted from the side of the board which does not have the copper strips, and the leads attached to the copper strips using a solder joint. Soldering is not a difficult skill to learn and the method is described later in this document.

When all of the components have been attached to the stripboard and the circuit tested, then the board is mounted in a small plastic case as shown here:

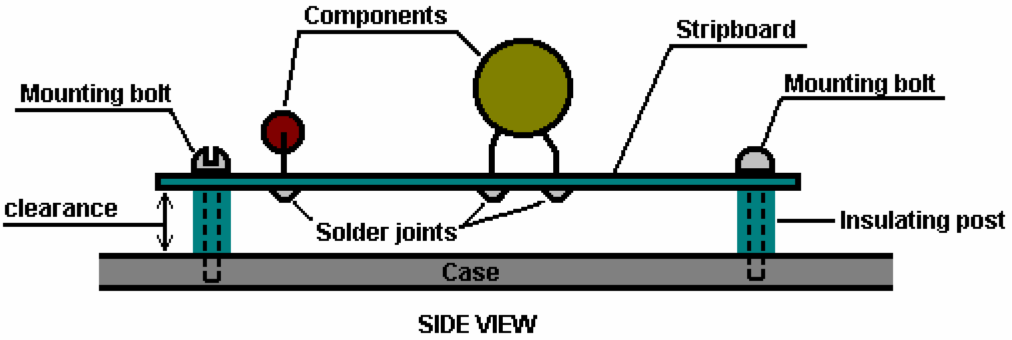

Insulating posts can be made from a short pieces of plastic rod with a hole drilled through its length. The mounting bolt can self-tap into a hole drilled in the case, if the hole is slightly smaller than the diameter of the bolt threads. Alternatively, the holes can be drilled slightly larger and the bolt heads located outside the case with nuts used to hold the board in place. This style of mounting holds the circuit board securely in place and gives some clearance between the board and the case.

You will need building equipment, namely, a soldering iron, a 12 volt power supply such as a battery pack and an accurate digital volt meter for this project. If the 12 volt supply is a main-powered unit, then it needs to be a well-filtered, voltage-stabilised unit. Lastly, you will need a variable voltage source that can go from 0 to 1 volt to imitate the output from the vehicle's oxygen sensor when testing the completed circuit board. This is simple enough to make, using a resistor and a variable resistor.

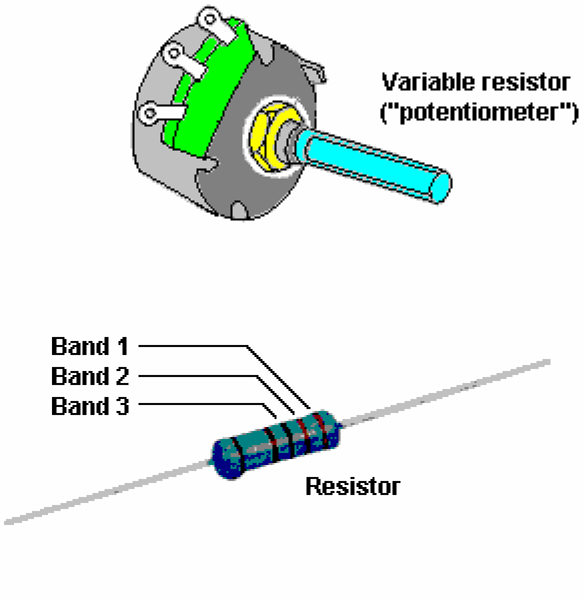

A series of components will be needed for the circuit itself. These can be bought from a number of different suppliers and the ordering details are shown later in this document. Shown above is a resistor. The value of the resistor is indicated by a set of three colour bands at one end of the body. The reason for doing this rather than just writing the value on the resistor, is that when the resistor is soldered in place, its value can be read from any angle and from any side. The component list shows the colour bands for each of the resistors used in this circuit. If you want more information on basic electronics, then read the Electronics Tutorial which can be found at http://www.free-energy-info.co.uk /Chapter12.pdf

Other components which you will be using, look like this:

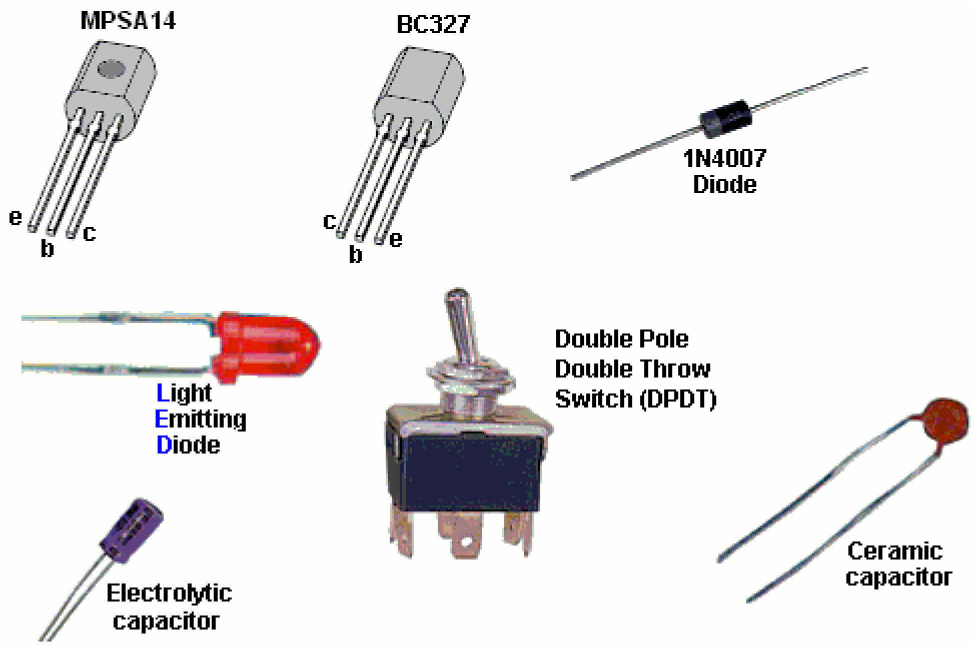

The MPSA14 and the BC327 devices are transistors. They each have a "Collector", a "Base" and an "Emitter" wire coming out of them. Please notice that the two packages are not identical, and take care that the right wire is placed in the correct hole in the stripboard before soldering it in place.

The 1N4007 diode has a ring marked at one end of the body. The ring indicates the flat bar across the symbol as shown on the circuit diagram, and in that way it identifies which way round the diode is placed on the stripboard.

The Light-Emitting Diode (the "LED") will be familiar to most people as it is used so extensively in equipment of all types.

The toggle switch has six contacts - three on each side. The centre contact is connected to one of the two outer contacts on its side, which one, depends on the position of the switch lever.

The two capacitors (which are called "condensers" in very old literature) look quite different from each other. The electrolytic capacitor has it's + wire marked on the body of the capacitor, while the ceramic has such a small value that it does not matter which way round it is connected.

The main component of the circuit, is an integrated circuit or "chip". This is a tiny package containing a whole electronic circuit inside it (resistors, capacitors, diodes, whatever, ...). Integrated circuit chips generally look like this:

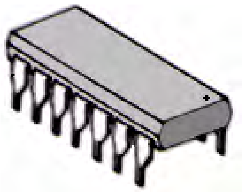

A very common version of this package has two rows of seven pins each and it goes by the grandiose name of "Dual In Line" which just means that there are two rows of pins, each row having the pins in a straight line. In our particular circuit, the chip has eighteen pins, in two rows of nine.

Now to the circuit itself. If you find it hard to follow, then take a look at the electronics tutorial on the web site as it shows the circuit diagram symbol for each component and explains how each device works.

The circuit contains three capacitors, eight resistors, two diodes, one LED, one IC chip, two transistors, one toggle switch and two types of component not yet described, namely: two preset resistors and one rotary switch.

Preset resistor

Rotary switch

Knob

The preset resistor is very small and is adjusted using a flat bladed screwdriver. It is used for making an adjustable setting which is then left unchanged for a long time. The Rotary switch has a central contact which is connected to a row of outer contacts in turn when the shaft is rotated from position to position. The switch shaft is made of plastic and so can easily be cut to the length needed to make a neat installation, and the knob is locked in place by tightening its grub screw against the flat face of the shaft, although some knobs are designed just to push tightly on to the shaft. There is a wide range of knob styles which can be used with this switch, so the choice of knob is dictated by personal taste.

This is the circuit diagram:

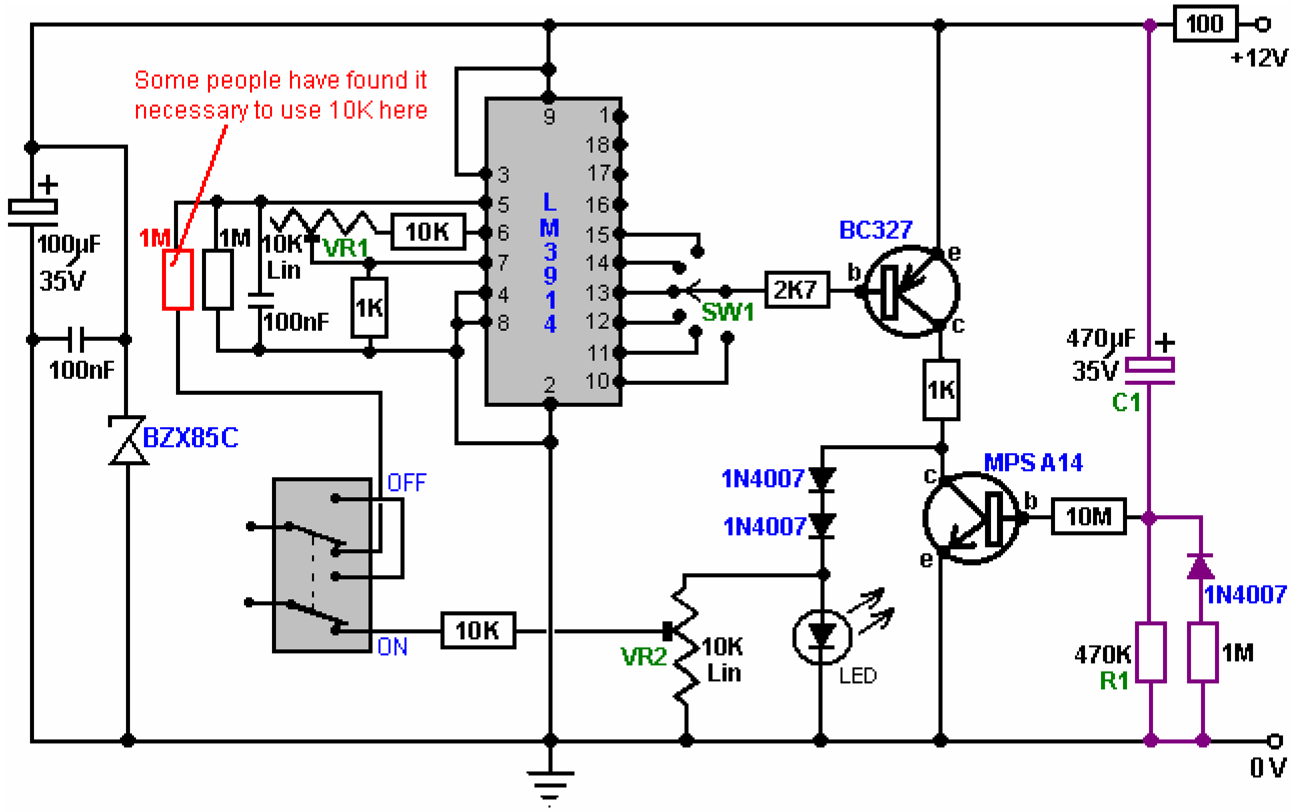

Electronic circuits are normally "read" from left to right, so we will look at this circuit that way. The first components are the 100 microfarad, 35 volt electrolytic capacitor with the tiny 100 nF capacitor across it. These are put there to help iron out any variations in the voltage supply. The BZX85C zener diode is a 24-volt type and it protects the integrated circuit from voltage spikes coming along the +12-volt line from other equipment in the vehicle, preventing the circuit from being fed more than 24 volts for even a fraction of a second as that would damage the integrated circuit.

The next item is the On/Off dashboard switch. When switched to its Off position as shown here:

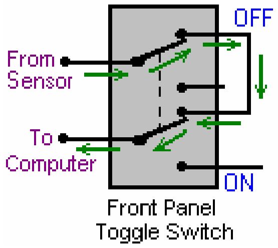

the connection from the oxygen sensor is passed straight through to the vehicle's fuel computer, bypassing the circuit board completely. This switch allows the whole circuit to be switched Off should you want to do this for any reason.

In it's On position, as shown in the circuit diagram, the varying voltage signal coming from the oxygen sensor is passed into the circuit, and the output voltage from the circuit is passed back to the fuel computer, instead of the original sensor voltage. This allows the circuit to manipulate the voltage sent to the fuel computer.

The next set of components (four resistors, one ceramic capacitor and one preset resistor) shown here:

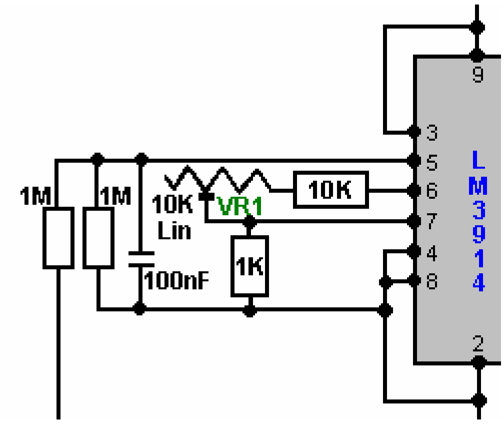

are needed to feed the incoming sensor voltage to the Integrated Circuit chip, and make the chip operate in the way that we want, (the chip manufacturer allows more than one way for the chip to work). You can just ignore these components for now, just understand why they are there.

The Integrated Circuit chip has ten outputs, coming out through Pins 1 and 10 through 18 inclusive:

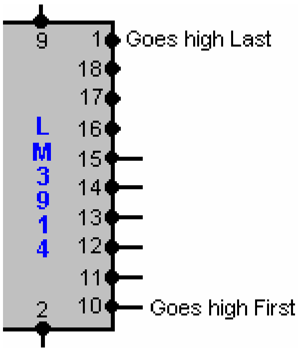

If the input voltage coming from the oxygen sensor is low, then all of these ten outputs will have low voltages on them. When the input voltage rises a little, the voltage on Pin 10 suddenly rises to a high value, while the other output pins still have low voltages.

If the input voltage rises a little higher, then suddenly the voltage on Pin 11 rises to a high value. At this point, both Pin 10 and Pin 11 have high voltage on them and the other eight output pins remain at low voltage.

If the input voltage rises a little higher again, then suddenly the voltage on Pin 12 rises to a high value. At this point, Pin 10, Pin 11 and Pin 12 all have high voltage on them and the other seven output pins remain at low voltage.

The same thing happens to each of the ten output pins, with the voltage on Pin 1 being the last to get a high voltage on it. The circuit is arranged so that Pin 10 provides the output signal for the richest air/fuel mixture for the vehicle, and the mix gets progressively leaner as the output on Pins 11, 12, ... etc. are selected to be fed to the fuel computer.

As there is the possibility of engine damage if the fuel mix is too lean, only six of the outputs are taken on into the circuit. However, if the engine is being fed hydroxy gas from an electrolyser to improve both the miles per gallon performance and reduce emissions to zero, then it is likely that the engine will run cooler than before and engine damage is most unlikely to occur. It is quite safe to leave the remaining output pins of the Integrated Circuit chip unconnected. However, if this unit is to be used with the Nitrogen Hydroxide cell described in the D18.pdf document, then it is quite safe to connect Pins 16, 17, 18 and 1 and set the rotary switch to ten positions.

The output pin to be used by the remainder of the circuit is selected by the rotary switch mounted on the dashboard:

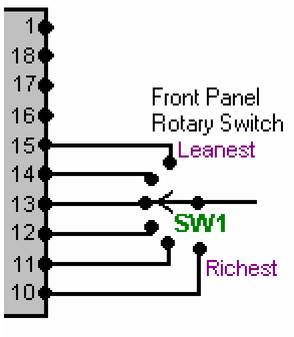

A standard single-pole rotary wafer switch has twelve positions but the switch operation can be restricted to any lesser number of positions by placing the end-stop lug of the switch just after the last switch position required. This lug comes as standard, fits around the switch shaft like a washer, and is held in place when the locking nut is tightened on the shaft to hold the switch in place. The lug projects down into the switch mechanism and forms an end-stop to prevent the switch shaft being turned any further. With six switch positions, the circuit provides five levels of leaner air/fuel mix which can be selected. This should be more than adequate for all practical purposes.

The next section of the circuit is the BC327 transistor amplifier stage which provides the output current for the fuel computer:

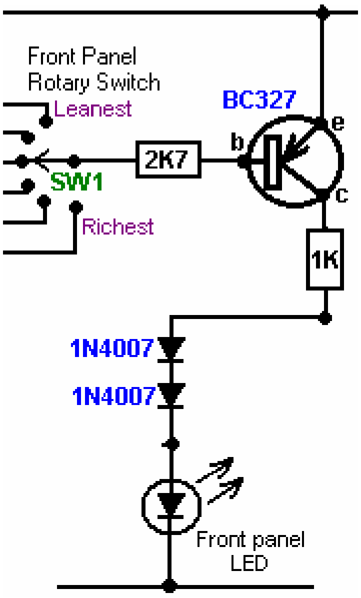

Here, the switch “SW1” connects to one of the output pins of the Integrated Circuit. When the voltage on that pin goes low, it causes a current to flow through the transistor Base/Emitter junction, limited by the 2.7K (2,700 ohm) resistor. This current causes the transistor to switch hard On, which in turn alters the voltage on its Collector from near 0 volts to near +12 volts. The 2.7K resistor is only there to limit the current through the transistor and to avoid excessive loading on the output pin of the IC.

The transistor now feeds current to the LED via the two 1N4007 diodes and the 1K (1,000 ohm) resistor. This causes the Light Emitting Diode to light brightly. The 1K resistor is there to limit the amount of current flowing through this section of the circuit.

Part of the voltage across the LED is fed back to the fuel computer:

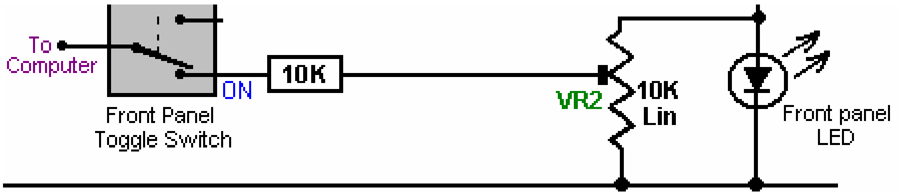

By moving the slider contact on the preset resistor “VR2”, any output voltage can be fed to the fuel computer. This voltage can be anything from the whole of the voltage across the LED, down to almost zero volts. We will use VR2 to adjust the output voltage when we are setting the circuit up for use. In this circuit, VR2 is acting as a "voltage divider" and it is there to allow adjustment of the output voltage going from the circuit to the fuel computer.

The final section of the circuit is the MPSA14 transistor and its associated components:

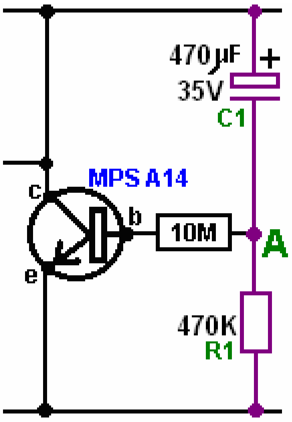

This circuit is a timer. When the circuit is first powered up (by the vehicle's ignition key being turned), the 470 microfarad capacitor "C1" is fully discharged (if it isn't, then the oxygen sensor will already be hot). As it is discharged and one side is connected to the +12 volt line, then the other side (point "A") looks as if it is also at +12 volts. This provides a tiny current to the Base/Emitter junction of the MPSA14 transistor, through the high resistance 470K (470,000 ohm) resistor. The MPSA14 transistor has a very high gain and so this tiny current causes it to switch hard on, short-circuiting the LED and preventing any voltage developing across the LED.

As time passes, the tiny current flowing through the MPSA14 transistor, along with the tiny current through the 3.9M (3,900,000 ohm) resistor "R1", cause a voltage to build up on capacitor "C1". This in turn, forces the voltage at point "A" lower and lower. Eventually, the voltage at point "A" gets so low that the MPSA14 transistor gets starved of current and it switches off, allowing the LED to light and the circuit to start supplying an output voltage to the fuel computer. The purpose of the section of the circuit is to shut off the output to the fuel computer until the oxygen sensor has reached it's working temperature of 600 degrees Fahrenheit. It may be necessary to tailor this delay to your vehicle by altering the value of either "R1" or "C1". Increasing either or both will lengthen the delay while reducing the value of either or both, will shorten the delay.

We want the time delay to occur if the engine is off for some time, but not to occur if the engine is switched off only briefly. For this to happen, it is suggested that a diode is placed across the timing resistor. This will have no effect when the circuit is powered up, but it will discharge the capacitor when the circuit is powered down. We can slow down the rate of discharge by putting a high-value resistor in series with the discharge diode and that would make the circuit:

Circuit Operation:

Now that we have looked at each part of the circuit separately, let us look again at the way that the circuit operates. The main component is the LM3914 integrated circuit. This device is designed to light a row of Light Emitting Diodes ("LEDs"). The number of LEDs lit is proportional to the input voltage reaching it through it's Pin 5. In this circuit, the integrated circuit is used to provide a reduced voltage to be fed to the fuel computer, rather than to light a row of LEDs. When the operating switch is set in it's ON position, the sensor voltage is fed to Pin 5 through a 1 megohm resistor.

The sensitivity of this circuit is adjusted, so that when 500 millivolts (0.5 volts) is applied to Pin 5, the output on Pin 10 is just triggered. This is done by adjusting the 10K linear preset resistor "VR1" while placing a test voltage of 500 millivolts on Pin 5. This LM3914 Integrated Circuit is normally switched so that it samples the sensor voltage. The LM3914 chip provides ten separate output voltage levels, and the circuit is arranged so that any one of several of these can be selected by the rotary switch "SW1". These output voltages range from 50 millivolts on Pin 1 to 500 millivolts on Pin 10, with each output position having a 50 millivolt greater output than it's neighbouring pin. This allows a wide range of control over the sensor feed passed to the fuel computer.

The input resistor/capacitor circuit provides filtering of the sensor signal. Because this circuit draws very little current, it is easily knocked out of correct operation through it's input line picking up stray electrical pulses produced by the engine, particularly the vehicle's ignition circuit. When the exhaust sensor heats up, the signal becomes cleaner and then the circuit starts operating correctly. The circuit includes a delay so that after start up, the output is held low for a few minutes to simulate a cold sensor. The sensor must be operating correctly before we send signals to the computer. The most common problem, if we don't have this delay, is that the output will be high simply from the noise on the signal line. The computer will think the sensor is working, because it is high, and will cut back the fuel to make the signal go low. If that were to happen, we would end up with an over-lean fuel input to the engine, producing very poor acceleration.

The front panel LED is not just to show that the device is operating, but forms a simple voltage regulator for the output signal to the computer. When the engine is warmed up and running normally, the LED is lit when the output is high, and not lit when the output is low, so this LED should be flashing on and off.

The earth connection for the oxygen sensor is the exhaust system, which is firmly bolted to the engine. The computer earth is the vehicle body. A difference of just 0.5 volts can make a large difference to the mixture. If the engine is not securely earthed to the vehicle body, then a voltage difference can exist between the two, and in this situation a voltage difference of just 0.5 volts would normally go unnoticed. We can't afford to have that sort of voltage difference when trying to control the mixture accurately, so some investigation and adjustment is needed.

To do this, start the engine, switch the headlights on to high beam, then measure the voltage between the engine and the body. Use a digital volt meter. Any more than 50 millivolts (0.05 volts) means that there is a bad earth connection which need cleaning and tightening. Modern cars usually have more than one connection so look around. If you have trouble achieving a really good connection, then earth your circuit board directly on the engine rather than connecting it to a point on the bodywork of the vehicle. The most important item is to have a good quality signal voltage coming from the sensor, since the operating range consists of quite low voltages. The components and tools needed for building this circuit are shown later, but for now, consider the setting up and testing of the unit so as to understand better what is needed.

Adjusting on the Bench

When the circuit has been constructed to the testing stage, that is, with all components in place except for the timing capacitor "C1", and before the power is turned on, plug the Integrated Circuit chip into its socket mounted on the board. Be very careful doing this as the chip can be destroyed by static electricity picked up by your body. Professionals wear an electrical earth wrist strap when handling these devices, so it would be a good idea to touch a good earth point such as a metal-pipe cold water system just before handling the chip.

It is vital that you install the IC chip, the correct way round or it may be damaged. The circuit board layout shows which way round it goes. The chip has a semi-circular indentation at one end to show which end is which, so be careful that the indentation is positioned as shown on the board layout in the section which shows how the board is built. Some manufacturers use a dot rather than a semi-circular indentation to mark the end of the chip which has Pin 1 in it.

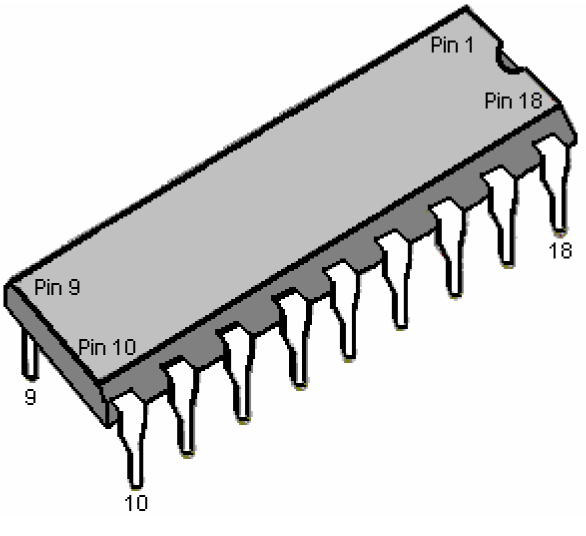

Make up the test voltage device. We need something to give us an adjustable voltage in the range 0 to 1 volt. A very easy way to get this is to use a 10K resistor and a 1K variable resistor (called a "potentiometer" by some people) and connect them across the 12 volt battery, as shown here:

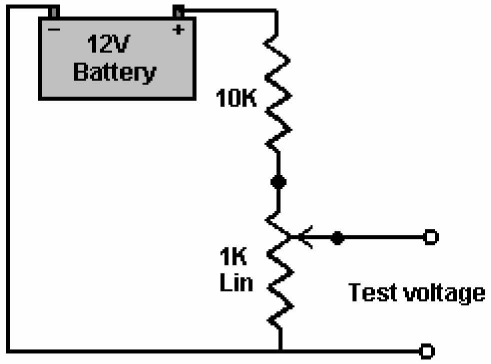

This gives us a voltage in the correct range when the shaft of the variable resistor is turned. Power up the circuit board by switching the 12 volt battery through to the board. Adjust the test-voltage source to 500 millivolts (0.5 volts) and apply it to the board's input (where the sensor connection will be made when it is installed in the vehicle). Set the switch to the "Richest" position, that is, with the switch connected to Pin 10 of the chip.

Now, using a flat-blade screwdriver, adjust the sensitivity control preset resistor "VR1" so that the output LED is just lit. Leave the preset resistor in that position and adjust the test voltage lower and higher to test that the LED turns on and off in response to the varying voltage at the input to the circuit. The LED should come on at 0.5 volts, and go off just below 0.5 volts. The other outputs, which can be selected by the rotary switch "SW1", will be about 50 millivolts lower for each position of the switch away from it's "Richest" setting on Pin 10.

Now, with the output high and the LED lit, use a flat-bladed screwdriver to adjust the preset resistor "VR2" to set the output voltage being sent to the computer to about 1.0 volts. When this has been set, lower the input voltage so that the LED goes out. The output voltage should now be at zero volts. If this is what happens, then it shows that the circuit is operating correctly.

If this board is not in place, the sensor will cause the fuel computer to make the fuel mixture richer so as to maintain a 500 millivolt voltage from the sensor. With the circuit in place and set to its "Richest" setting, exactly the same thing happens. However, if the rotary switch is moved to its next position, the fuel computer will maintain the fuel feed to maintain a 450 millivolt output, which is a leaner fuel-to-air mixture. One step further around and the fuel computer will make the mix even leaner to maintain a 400 millivolt output from the circuit board, which the fuel computer thinks is coming from the exhaust oxygen sensor.

If your circuit board does not operate as described, then power it down and examine the circuit board again, looking for places where the solder connections are not perfect. There may be somewhere where the solder is bridging between two of the copper strips, or there may be a joint which looks as if it is not a good quality joint. If you find one, don't solder anywhere near the IC chip as the heat might damage the chip. If necessary, earth yourself again, remove the chip and put it back into the anti-static packaging it came in, before repairing the board. If the components are all correctly positioned, the copper tracks broken at all the right places and all solder joints looking good and well made but the board still is not working correctly, then it is likely that the IC chip is defective and needs to be replaced.

Next, install the delay capacitor "C1". Set the test voltage above 500 millivolts and turn the power on again. It should take about three minutes for the LED to come on. If you want to shorten this delay, then change the timing resistor "R1" for a resistor of a lower value. To lengthen the delay, replace the timing capacitor "C1" with a capacitor of larger value. If you find that the oxygen sensor heats up quickly, then you can reduce the length of the delay. Having too long a delay is not ideal, since the computer will be adding extra fuel to make the mixture richer.

It is suggested that the rotary switch should be set to have only six switch positions (by moving it's end-stop lug washer), so initially, connect the IC chip output pins 10 through 15 to the switch. You can choose to connect the wires to the switch so that the mixture gets richer when you turn the knob clockwise, or if you prefer, you can wire it in the reverse order so that the mixture gets richer when you turn the knob counter-clockwise.

Testing in the Car

You can now test the device in the vehicle but don't install it yet. Look in the engine compartment and locate the oxygen sensor. If you have difficulty in finding it, get a copy of the Clymer or Haynes Maintenance Manual for your vehicle as that will show you the position. If your vehicle has two sensors, then select the one nearest to the engine. If your sensor has five wires running to it, then it is a "wideband" sensor which measures both the oxygen content and the amount of unburnt fuel, and unfortunately, the type of circuit described here will not control it.

Start the vehicle and allow the oxygen sensor to warm up for a couple of minutes. Remember that there is a delay built in to the circuit, so after a few minutes you should see the LED start to flash. Rev the engine and the LED will stay on. When you release the throttle, the LED will go out for a while. A flashing LED is what you want to see. The rate of flashing will be somewhere between 1 and 10 times per second, most likely around 2 per second. Confirm that the LED goes out when you switch off the circuit board On/Off switch mounted on the dashboard.

Now comes the exciting bit, cutting the oxygen sensor wire and inserting the controller. Turn the engine off and cut the wire in a convenient place. Use crimp connectors on the wire ends. Use a matching pair on the wire which you just cut, in case you need to reconnect it, as shown here:

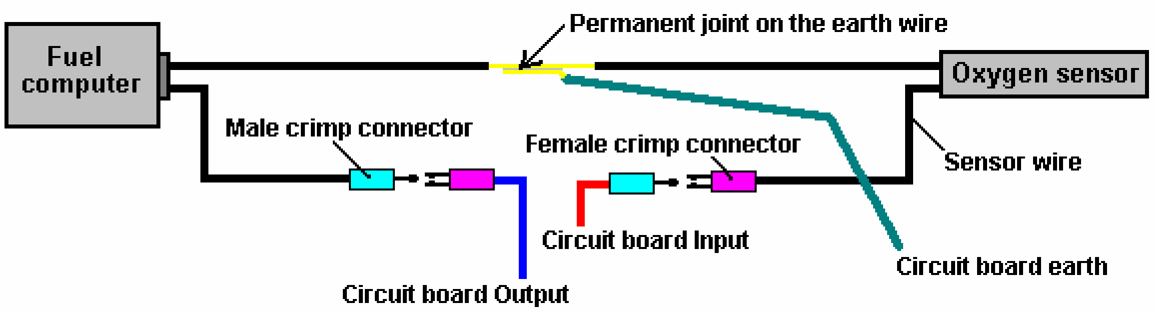

When set up like this, the male connector furthest on the left could be plugged into the female connector furthest on the right and the circuit board removed. Be sure to insulate the sensor and fuel computer plug/socket connections to make quite sure that neither of them can short-circuit to any part of the body. There is no need to insulate the earth connection as it is already connected to the body of the vehicle. Although not shown in the diagram, you could also put a male and female crimp connector pair on the earth cable. If your sensor has only one wire coming from it, then you best earth connection is to a solder-tag connector placed under a bolt on the engine. If you do that, be sure to clean all grease, dirt, rust, etc. off the underside of the bolt head and the area around the bolt hole. Push a paper towel into the bolt hole before doing this to make sure that no unwanted material ends up in the bolt hole and use wet-and-dry paper to really clean the surfaces. The objective here is to make sure that there is a very good electrical connection with shiny metal faces clamped firmly together.

Installing the Controller

Now, install the circuit board in the vehicle. For the 12 volt supply, find a connection which is switched on and off by the vehicle's ignition switch. Don't drive the car yet, do this test in the driveway. With the front panel switch in it's "Off" position, start the car and check that it runs normally. Set the front panel rotary switch to the Richest position (connected to the IC's Pin 10) and switch the circuit board toggle switch to it's "On" position. The car is now running with a modified oxygen sensor signal although the mixture is still the same. The vehicle performance should be completely normal. Drive the vehicle with this setting for a while to prove that the system is working reliably before changing to any of the lower settings. When you are satisfied that everything is in order, try the next leanest setting on the rotary switch and see how it runs.

It is important that there should be no hesitation in the engine performance and no knocking or "pinking" as that is an indication that the mix is too lean and the engine is liable to overheat. This circuit is intended for use with an electrolyser, so your electrolyser should be set up and working for these tests. The electrolyser will tend to make the engine run cooler and offset any tendency towards overheating.

Building the Circuit Board

Although the above information has been presented as if the board has already been built, the actual construction details have been left until now, so that you will already have an understanding of what the circuit is intended to do and how it is used.

It is likely that you will know somebody (neighbour, friend, relative,...) who has the necessary equipment and skills. If so, borrow the equipment, or better still, recruit the person to help with the construction. It is very likely that anybody owning the equipment would be very interested in your project and more than willing to help out.

However, the rest of this document will be written on the assumption that you cannot find anybody to help and have had to buy all of the necessary equipment. This project is not difficult to build, so you will almost certainly be successful straight off.

The tools which you will need, are:

1. A soldering iron with a fine conical tapering tip (probably 15 watts power rating)
2. Some “Multicore” resin solder. This is special solder for electronics construction work and is quite different from plumber’s solder which is not suitable for this job.
3. A pair of long-nosed pliers (for holding component wires when soldering them in place)
4. Something for cutting and cleaning wires and stripping off insulation coverings. I personally prefer a pair of “nail” scissors for this job. Others prefer a pair of wire cutters and some sandpaper. You get whatever you feel would be the best tool for doing these tasks.
5. A 1/8 inch (3 mm) drill bit (for making bolt holes in the stripboard and for breaking the copper strips where needed) and a 3/8 inch (9 mm) drill and bit for mounting the switches on the plastic box.
6. A coping-saw or similar small saw for cutting the rotary switch shaft to the optimum length.
7. A small screwdriver (for tightening knob grub screws).
8. A crimping tool and some crimp connectors.
9. A multimeter (preferably a digital one) with a DC voltage measuring range of 0 to 15 volts or so.
10. (Optional) a magnifying glass of x4 or higher magnification (for very close examination of the soldering)

Soldering

Many electronic components can be damaged by the high temperatures they are subjected to when being soldered in place. I personally prefer to use a pair of long-nosed pliers to grip the component leads on the upper side of the board while making the solder joint on the underside of the board. The heat running up the component lead then gets diverted into the large volume of metal in the pair of pliers and the component is protected from excessive heat. On the same principle, I always use an Integrated Circuit socket when soldering a circuit board, that way, the heat has dissipated fully before the IC is plugged into the socket. It also has the advantage that the IC can be replaced without any difficulty should it become damaged.

If you are using CMOS integrated circuits in any construction, you need to avoid static electricity. Very high levels of voltage build up on your clothes through brushing against objects. This voltage is in the thousands of volts range. It can supply so little current that it does not bother you and you probably do not notice it. CMOS devices operate on such low amounts of current that they can very easily be damaged by your static electricity. Computer hardware professionals wear an earthing lead strapped to their wrists when handling CMOS circuitry. There is no need for you to go that far. CMOS devices are supplied with their leads embedded in a conducting material. Leave them in the material until you are ready to plug them into the circuit and then only hold the plastic body of the case and do not touch any of the pins. Once in place in the circuit, the circuit components will prevent the build up of static charges on the chip.

Soldering is an easily-acquired skill. Multi-cored solder is used for electronic circuit soldering. This solder wire has flux resin contained within it and when melted on a metal surface, the flux removes the oxide layer on the metal, allowing a proper electrical and mechanical joint to be made. Consequently, it is important that the solder is placed on the joint area and the soldering iron placed on it when it is already in position. If this is done, the flux can clean the joint area and the joint will be good. If the solder is placed on the soldering iron and then the iron moved to the joint, the flux will have burnt away before the joint area is reached and the resulting joint will not be good.

A good solder joint will have a smooth shiny surface and pulling any wire going into the joint will have no effect as the wire is now solidly incorporated into the joint. Making a good solder joint takes about half a second and certainly not more than one second. You want to remove the soldering iron from the joint before an excessive amount of heat is run into the joint. It is recommended that a good mechanical joint be made before soldering when connecting a wire to some form of terminal (this is often not possible).

The technique which I use, is to stand the solder up on the workbench and bend the end so that it is sloping downwards towards me. The lead of the component to be soldered is placed in the hole in the stripboard and gripped just above the board with long-nosed pliers. The board is turned upside down and the left thumb used to clamp the board against the pliers. The board and pliers are then moved underneath the solder and positioned so that the solder lies on the copper strip, touching the component lead. The right hand is now used to place the soldering iron briefly on the solder. This melts the solder on the joint, allowing the flux to clean the area and producing a good joint. After the joint is made, the board is still held with the pliers until the joint has cooled down.

Nowadays, the holes in the stripboard are only 1/10 inch (2.5 mm) apart and so the gaps between adjacent copper strips is very small indeed. If you solder carefully, there should be no problem. However, I would recommend that when the circuit board is completed, that you use a magnifying glass to examine the strip side of the board to make quite sure that everything is perfectly ok and that solder does not bridge between the copper strips anywhere. Before powering up the circuit, double-check that all of the breaks in the copper strips have been made correctly. Here is a possible layout for the components on the stripboard:

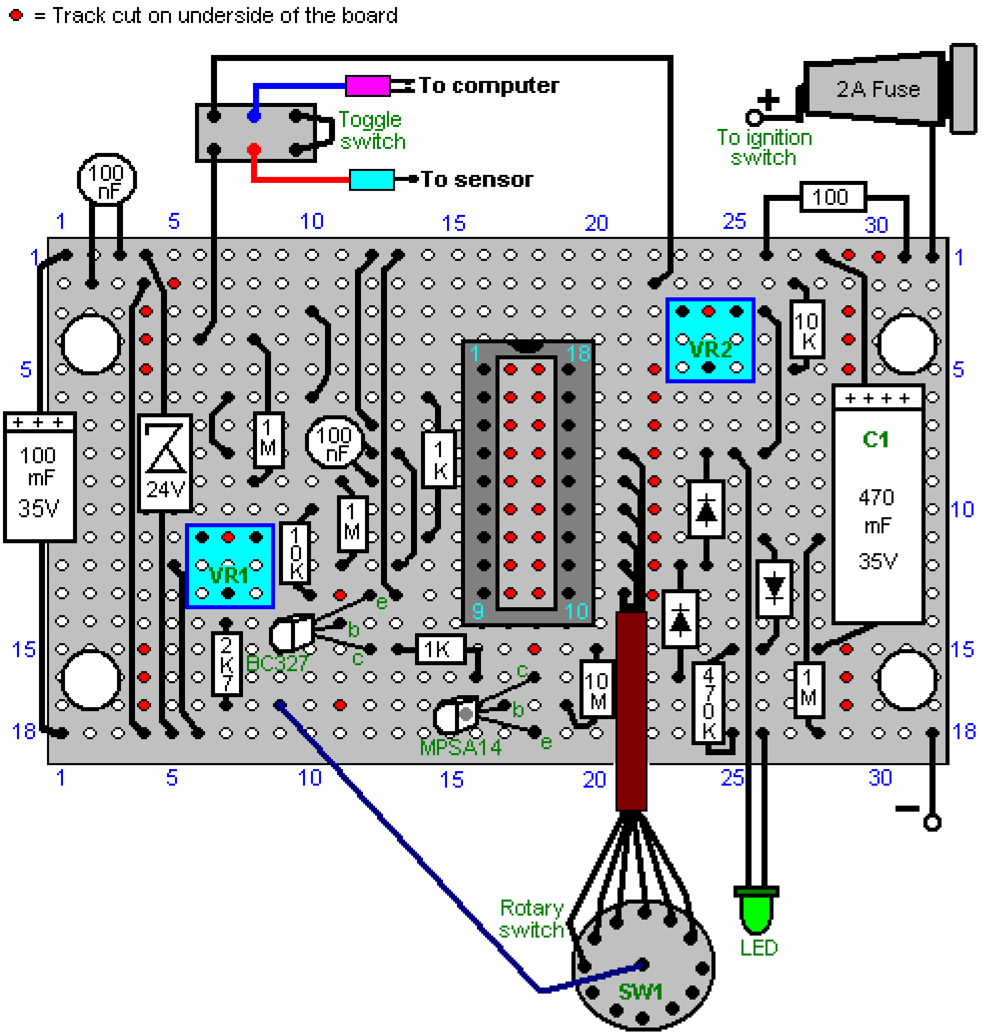

If this board is turned over horizontally, the underside will look like this:

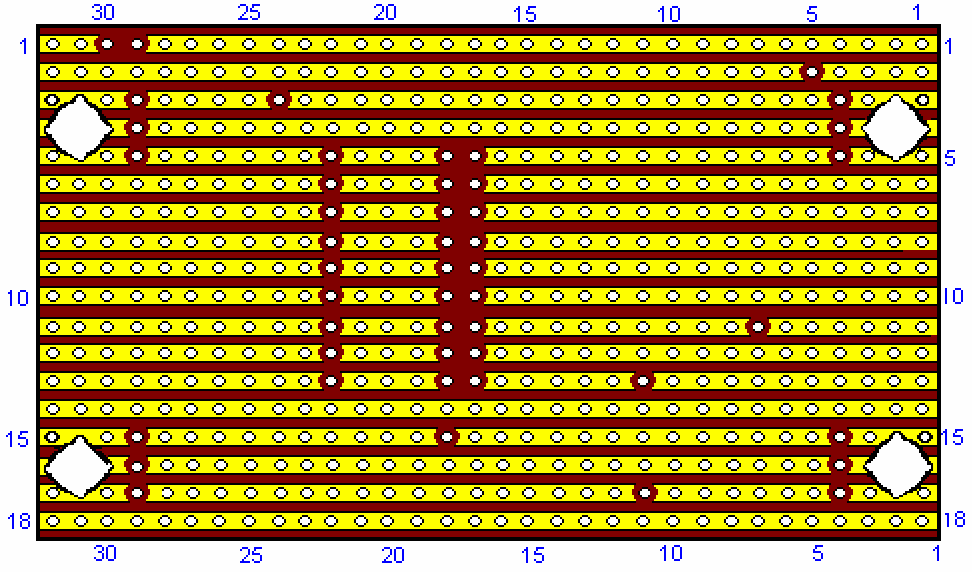

Underside of the Board

This shows where the breaks in the copper strips need to be made using a 1/8 inch (3 mm) drill bit.

To construct this circuit, cut a piece of stripboard which has 18 strips, each with 32 holes. That is a board size of about two inches (50 mm) by just over three inches (85 mm). Mount the components on the board, working from one end as the installation is easier if you have a clear board to work across. If you are right-handed, then start at the left hand side of the board and work towards the right, installing all components as you go. If you are left-handed, then mount the components starting with the right hand side of the board and working towards the left hand side.

Having said that, it is probably easier if you put all of the wire jumpers in place as the first step. The best wire for this is solid core wire of the type used in telephone wiring, as it is easy to cut, easy to remove the insulation and it lies flat on the board, clear of all of the other holes. So, start with the wire jumpers and then install the electronic components working across the board.

The jumper wires lie flat on the board, and like the other components, have about 2 mm of clean wire projecting through the copper strip before the solder joint is made.

The wires coming off the board should be of the type which have several thin wires inside the insulation, as these are more flexible and withstand the vibration of a vehicle in motion, better than solid core wire. If you have just one reel of wire, then be sure to label the far end of each piece mounted on the board, the moment you have soldered it in place. These labels will help avoid errors when mounting in the case, if you do not have different coloured wires.

The completed circuit board can be mounted in a small plastic box of the type which has a lid held in place by screws. It may be convenient to screw or bolt the case to the underside of the dashboard and then screw the lid in place, covering the mounting screws:

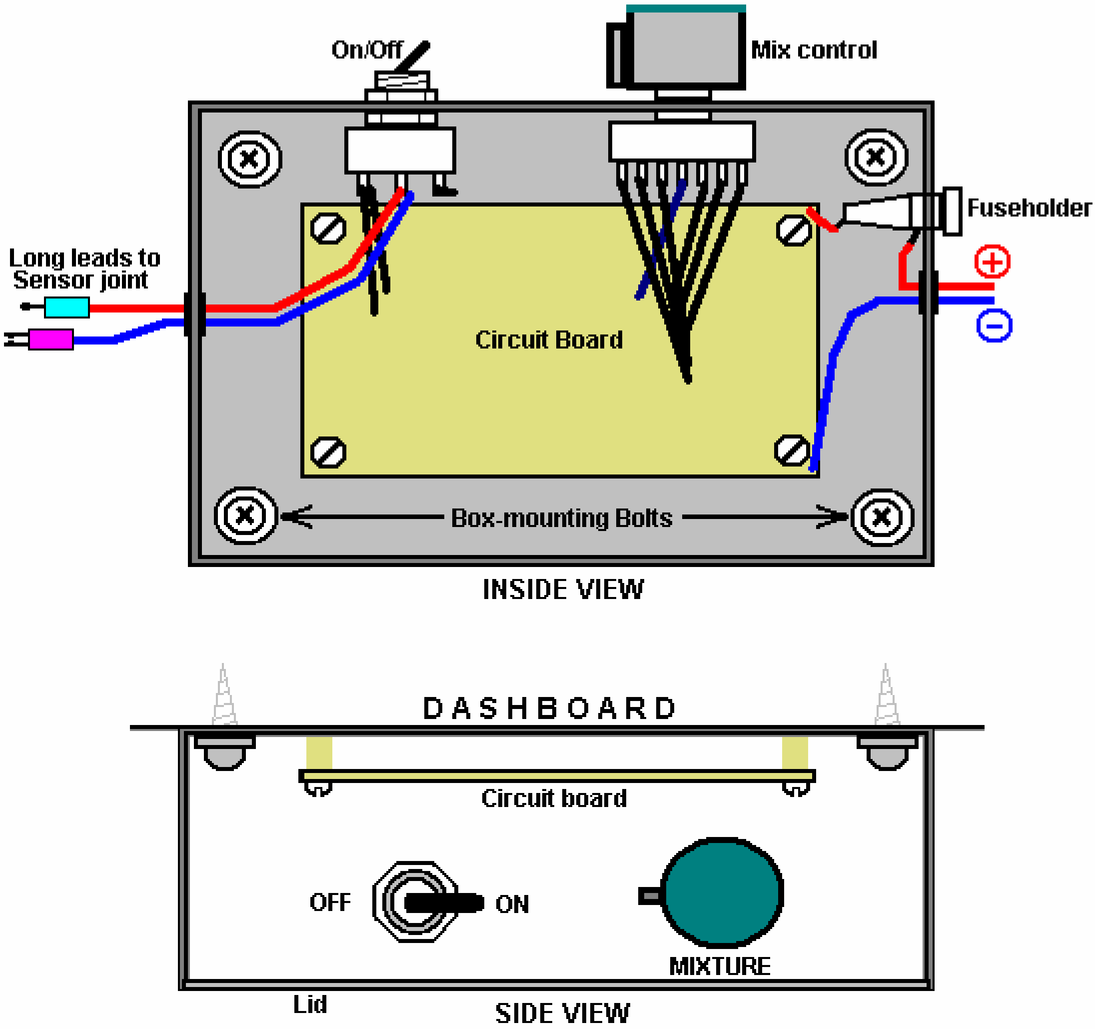

The components in this circuit are not critical and any near-match alternatives can be used. In the event that the MPSA14 Darlington-pair transistor is not available, then two general-purpose high-gain silicon transistors like the BC109 or 2N2222A can be substituted. Just connect them like this:

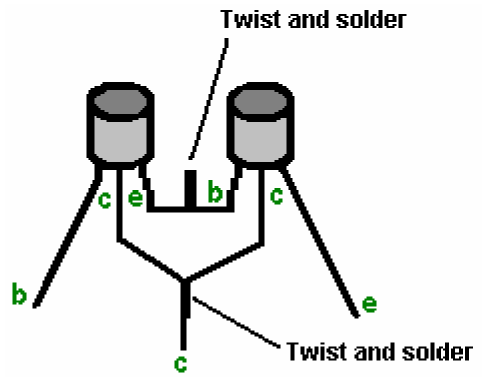

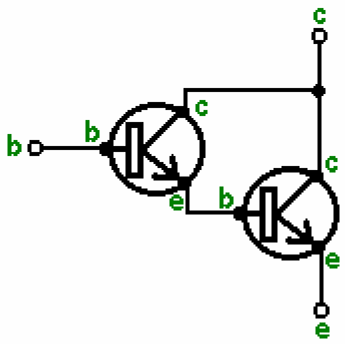

The emitter of the first transistor is connected to base of the second and the two collectors are connected together. If the transistors have metal cases, then make sure the emitter/base connection cannot touch either case as the cases are often connected internally to the collectors. If each transistor has a gain of only 200, then the pair will have a combined gain of 40,000 times. That means that the base current need only be 40,000 times less than the collector current of the second transistor.

The BC327 transistor can be replaced by almost any other silicon PNP transistor in this circuit as the gain does not need to be great and the power rating is very small. The following is a list of the main electronic components needed for the construction of this circuit as described here. There are several suppliers who are able to supply all of these components and the most suitable depends on where you are located. If there is any difficulty, try an internet search, and if that fails, ask for help in one or more of the Yahoo enthusiast groups such as ‘watercar’, ‘hydroxy’ or any of the electronics Groups.

Component	**Qty.**	**US Supplier**	**Code**
Black plastic box with lid, size about 4” x 3” x 2”	1	Radio Shack	270-1803
Stripboard: 18 strips, 32 holes	1	Electronix Express	0302PB16
Double Pole Double Throw toggle switch	1	Radio Shack	275-636
Fuse holder, panel mounting, 1.25”	1	Radio Shack	270-364
Fuse, 2 amp slow-blow 1.25”	1	Radio Shack	270-1262 ?? (3 A)
Rotary wafer switch, 12-way single pole	1	Electronix Express	17ROT1-12
Knob for the rotary switch	1	Radio Shack	274-424
LED, any colour, 5 mm diameter	1	Radio Shack	276-041
IC socket, 18 pin DIL	1	Radio Shack	276-1992
Miniature preset resistor, 10K linear	2	Radio Shack	271-282
LM3914 LED bar driver Integrated Circuit	1	Electronix Express	LM3914
BC327 PNP transistor	1	Electronix Express	2N2905
MPSA14 Darlington pair transistor	1	Electronix Express	MPSA14
1N4007 Diode or equivalent	3	Radio Shack	276-1103 (2 pack)
BZX85C zener diode, 24 volt version	1	Electronix Express	1N5359
470 microfarad, 35 volt (or higher) axial lead aluminium foil electrolytic capacitor	1	Radio Shack	272-1018
100 microfarad, 35 volt (or higher) axial lead aluminium foil electrolytic capacitor	1	Radio Shack	272-1016
100 nF (0.1 microfarad) ceramic disc capacitor	2	Radio Shack	272-135 (2 pack)
10 megohm 1/4 watt carbon resistor (Bands: Brown,Black,Blue)	1	Radio Shack	271-1365 (5 pack)
1 megohm 1/4 watt carbon resistor (Bands: Brown,Black,Green)	3	Radio Shack	271-1356 (5 pack)
470K 1/4 watt carbon resistor (Bands: Yellow,Purple,Yellow)	1 or 1	(Radio Shack) Radio Shack	use two 1M in parallel or 271-1133 (5 pack 1/2 watt)
10K 1/4 watt carbon resistor (Bands: Brown,Black,Orange)	1	Radio Shack	271-1335 (5 pack)
2.7K 1/4 watt carbon resistor (Bands: Red,Purple,Red)	1	Radio Shack	271-1328 (5 pack) [use 3.3K]
1K 1/4 watt carbon resistor (Bands: Brown,Black,Red)	2	Radio Shack	271-1321 (5 pack)
100 ohm 1/4 watt carbon resistor (Bands: Brown,Black,Brown)	1	Radio Shack	271-1311 (5 pack)
Connecting wire: stranded and solid core		Local supplier	

Electronix Express http://www.elexp.com/index.htm
Radio Shack http://www.radioshack.com/home/index.jsp

And for a UK supplier:

Component	**Qty.**	**European Supplier**	**Code**
Black plastic box with lid, size about 4” x 3” x 2”	1	ESR	400-555
Stripboard: 18 strips, 32 holes	1	ESR	335-010
Double Pole Double Throw toggle switch	1	ESR	218-028
Fuse holder, panel mounting 31 mm	1	ESR	187-115
Fuse, 2 amp 31 mm	1	ESR	190-220
Rotary wafer switch, 12-way single pole	1	ESR	210-012
Knob for the rotary switch	1	ESR	060-22X
LED, any colour, 5 mm diameter	1	ESR	711-540
IC socket, 18 pin DIL	1	ESR	110-180
Miniature preset resistor, 10K linear	2	ESR	998-310
LM3914 LED bar driver Integrated Circuit	1	ESR	LM3914
BC327 PNP transistor	1	ESR	BC327
MPSA14 Darlington pair transistor	1	ESR	MPSA13
1N4007 Diode or equivalent	3	ESR	1N4007
BZX85C zener diode, 24 volt version	1	ESR	726-240
470 microfarad, 35 volt (or higher) axial lead aluminium foil electrolytic capacitor	1	ESR	810-104
100 microfarad, 35 volt (or higher) axial lead aluminium foil electrolytic capacitor	1	ESR	810-096
100 nF (0.1 microfarad) ceramic disc capacitor	2	ESR	871-061
10 megohm 1/4 watt carbon resistor (Bands: Brown,Black,Blue)	1	ESR	906-610
1 megohm 1/4 watt carbon resistor (Bands: Brown,Black,Green)	3	ESR	906-510
470K 1/4 watt carbon resistor (Bands: Yellow,Purple,Yellow)	1	ESR	906-447
10K 1/4 watt carbon resistor (Bands: Brown,Black,Orange)	1	ESR	906-310
2.7K 1/4 watt carbon resistor (Bands: Red,Purple,Red)	1	ESR	906-227
1K 1/4 watt carbon resistor (Bands: Brown,Black,Red)	2	ESR	906-210
100 ohm 1/4 watt carbon resistor (Bands: Brown,Black,Brown)	1	ESR	906-110
Reel of multi-strand connecting wire 6 amp Red	1	ESR	054-112
Reel of multi-strand connecting wire 6 amp Blue	1	ESR	054-116
Reel of solid core (or local phone wire)	1	ESR	055-111

ESR http://www.esr.co.uk Tel: 01912 514 363

While the components listed above are the parts needed to construct the electronics board, the following items may be needed in addition when testing and installing the board in a vehicle:

Component	Use
Rubber or plastic grommets	To protect wires from rubbing against the edges of the holes in the box
Crimp “bullet” connectors	Male and female, one pair for each sensor wire cut
Mounting bolts, nuts and spacers	To hold the circuit board securely, clear of the box.
Double-sided adhesive tape	For mounting the box on the dash. Alternatively, hardware items for this.
Fuse-box connector	For connecting to the fuse box to give an ignition-switched 12V supply
10K resistor and 1K Linear variable resistor	For bench testing with voltages of up to 1 volt, if these components are not already to hand
Multimeter	For general checking of voltages, continuity, etc.

I should like to express my sincere thanks to the various members of the ‘watercar’ Group who provided the technical information and patient support which made this document possible.

An alternative: As the signal coming from the oxygen sensor to the vehicle’s ECU fuel computer needs to be raised slightly to allow for the much cleaner exhaust produced when a booster is being used, an alternative solution has been suggested and tested. The idea is to add a small, adjustable voltage to the signal already coming from the oxygen sensor. This voltage can be from a single ‘dry-cell’ battery and adjusted with a variable resistor:

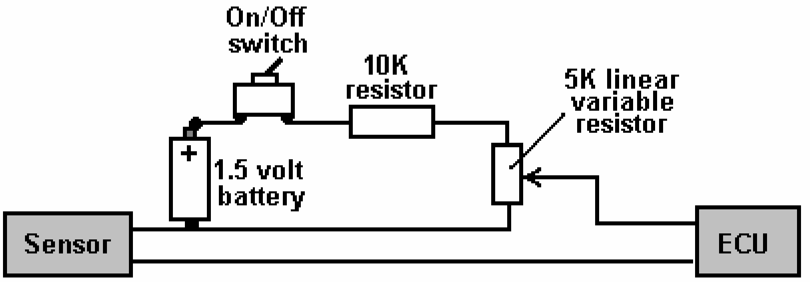

The circuit shown here allows a voltage anywhere from zero to 0.5 volts to be added to the oxygen sensor signal. This must **not** be done unless a booster is running. Using it without a booster is liable to lead to engine overheating and possible valve damage. This, of course, applies to the previous oxygen sensor signal adjusting circuit as well.

Please Note: This document has been prepared for information purposes only and must not be construed as an encouragement to build any new device nor to adapt any existing device. If you undertake any kind of construction work, then you do so entirely at your own risk. You, and only you, are responsible for your own actions. This document must not be seen as an endorsement of this kind of adaptation nor as providing any kind of guarantee that an adaptation of this kind would work for you personally. This document merely describes what has been achieved by other people and you must not consider it as being a foolproof blueprint for replication by anyone else.

The High Efficiency Electrolyser design of Bob Boyce

There are two main types of electrolyser which are in widespread use at this time. The most common is the DC electrolyser, usually running on the same voltage as the battery of the vehicle. The other type are sophiscated designs which are fed with a pulsing DC voltage.

Simple DC Cells

While there are many different styles of construction, there are some things which are common to all:

1. The electrolyser cell is not connected directly to the battery. Instead, its power comes via a relay which is operated by the ignition switch. This is important, as forgetting to switch a directly wired electrolyser off when the vehicle reaches its destination, leaves the generation of gas continuing while the vehicle is parked. This extra gas builds up and might become a danger, while the battery is being run down without any benefit being gained. The relay connection makes the electrolyser switch-off automatic and while that sounds like a minor thing, it most definitely is not. An even better connection for the relay is to wire it across the electrical fuel pump as that powers down automatically if the engine stalls, even with the ignition left on.

2. The electrical supply to the electrolyser then passes through a resettable circuit-breaker. This is also an important feature because, should any malfunction occur in the electrolyser cell which causes a continuously increasing current to be drawn (such as undue overheating of the cell), then the circuit breaker disconnects the voltage and prevents any serious problem arising. A light-emitting diode with a current limiting resistor of say, 680 ohms in series with it, can be wired directly across the contacts of the circuit breaker. The Light-Emitting Diode can be mounted on the dashboard. As the contacts are normally closed, they short-circuit the LED and so no light shows. If the circuit-breaker is tripped, then the LED will light up to show that the circuit-breaker has operated. The current through the LED is so low that the electrolyser is effectively switched off.

3. Both the electrolyser and the ’bubbler’ have tightly fitting ‘pop-off’ caps. This is very important. If the HHO gas above the surface of the liquid were to be ignited and the unit were robustly sealed, then the pressure build up inside the unit would be very rapid and it would explode like a grenade. If however, ‘pop-off’ caps are installed, then as the pressure starts to build up, the cap is displaced, maintaining the integrity of the unit, and preventing excessive pressure build-up. Having said that, it is a major objective to avoid gas ignition in the first place.

4. The wires going to the plates inside the electrolyser are both connected well below the surface of the liquid. This is to avoid the possibility of a connection working loose with the vibration of the vehicle and causing a spark in the gas-filled region.

5. The volume above the surface of the liquid is kept as low as possible to minimise the size of an explosion in the unlikely event of one occurring in spite of all of the precautions taken to avoid that happening. Some experimenters like to reduce the volume above the liquid surface by filling it with polystyrene ‘beans’. I am not happy with that arrangement as polystyrene is a material with major electrostatic properties. Massive charges build up rapidly on polystyrene, and while the damp conditions inside the electrolyser are not particularly suitable to electrostatic sparks, I feel that the risk of explosion is greater with moving pieces of polystyrene inside the cell.

6. Finally, the HHO gas is passed through a ‘bubbler’ before being fed to the engine. A bubbler is just a tall container of water with the gas being fed into it near the bottom, and forced to rise through the water before continuing it’s journey to the engine. If, for any reason, the gas in the pipe feeding the engine is ignited, then the gas above the water in the bubbler will be ignited. That will blow the cap off the bubbler, restrict the explosion to a small amount of gas, and the water column in the bubbler prevents the gas in the electrolyser from being ignited. People have suggested using flashback arrestors from gas-welding equipment but these are far too slow to work with high quality HHO gas where the flame front moves at a thousand metres per second. So the best practice is to use one, or more, bubblers as they are easy to make and install and are very reliable.

These DC electrolyers are the most simple to construct and they can use any size and shape of container which is convenient for mounting in the engine compartment of the vehicle. Many people opt for a cylindrical container as these are widely available and are easier to mount, possibly as shown here:

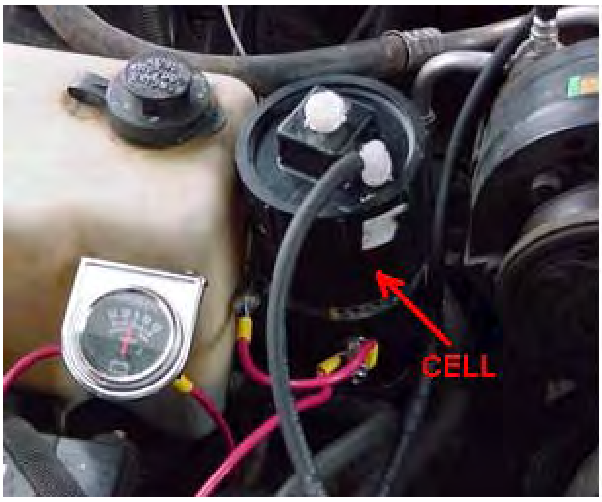

Finding space in the engine compartment is one of the more difficult tasks with European cars as their designs tend to pack the engine area tightly to reduce the size of the vehicle to a minimum.

The rate of gas production depends on a number of factors:

1. The liquid used for electrolysis. If distilled water is used, then almost no current will flow through the cell as distilled water has a very high resistance to current flow, and almost no gas will be produced. It is normal practice to add some other substance to the water to increase the rate of gas production.

   If salt is added to the water, the rate of electrolysis increases enormously. However, that is not a good choice of additive as the salt forms a corrosive mixture and Chlorine gas is produced along with the Hydrogen and Oxygen gas mix. The same goes for battery acid; it does work but it is a very poor choice which causes practical problems over a period of time. Other additives will create the increase in gas production but have similar undesirable effects.

   Two additives stand out as being the best choices. The first is Sodium Hydroxide (chemical symbol $NaOH$), sometimes called 'lye'. The very best choice is Potassium Hydroxide (chemical symbol KOH) which is available in pellet form. Both Sodium Hydroxide and Potassium Hydroxide act as a true catalyst in the process of electrolysis in that they promote gas production but do not get used up in the process.

2. The spacing of the electrode plates. The closer together that the plates are placed, the greater the rate of gas production. There is a practical limit to this, as bubbles of gas form between the plates and have to be able to escape and rise to the surface of the electrolyte. The optimum spacing is generally considered to be 3 mm or 1/8 inch, although some people prefer to have a 5 mm gap between the plates. These plates are typically made from 316-Grade stainless steel.

3. The area of the electrode plates and the preparation of the plate surface are both very important. The greater the plate area, the greater the rate of gas production. Some of this effect may be due to the improvement in the chances of bubbles escaping from the plates and not blocking some of the plate area. It is recommended that each face of every electrode plate has an area of between two and four square inches (13 and 25 square centimetres) per amp of current flowing through the cell.

   The preparation of the surface of the plates has a major effect on the rate of gas production. A very great improvement is achieved if both sides of each plate are sanded in a criss-cross pattern (this produces an increased surface area with thousands of microscopic peaks which help bubbles form, and then leave, the plate). The plates are then assembled and immersed in the electrolyte solution for about three days. This creates a protective white coating on the surface of the plates which helps to enhance the electrolysis. The plates are then rinsed off with distilled water and the cell is refilled with a fresh solution of electrolyte.

4. The current flowing through the cell. This is an absolutely key factor in gas production, and one of the most difficult to control accurately and economically. The greater the current, the greater the rate of gas production. The current is controlled by the concentration of Potassium Hydroxide in the electrolyte (water plus KOH) and the voltage across the cell. The voltage across the cell has limited effect as it reaches a maximum gas production rate at just 1.24 volts. Up to that point, an increase in voltage causes an increase in gas production rate. Once the voltage gets over 1.24 volts, increasing it further produces no further increase in the rate of gas production.

If the voltage is increased above 1.24 volts, the extra voltage goes to heat the electrolyte. Assume that the current through the cell is 10 amps. In that case, the power used to produce gas is 10 amps x 1.24 volts = 12.4 watts. When the engine is running, the voltage at the battery terminals will be about 13.8 volts as the alternator provides the extra voltage to drive current into the battery. The excess voltage applied to the cell is about 1.24 less than that, say 12.5 volts. The power which heats the electrolyte is about 12.5 volts x 10 amps = 125 watts. That is ten times the power being used to produce gas. This is very, very inefficient. The following diagram may help you understand the situation:

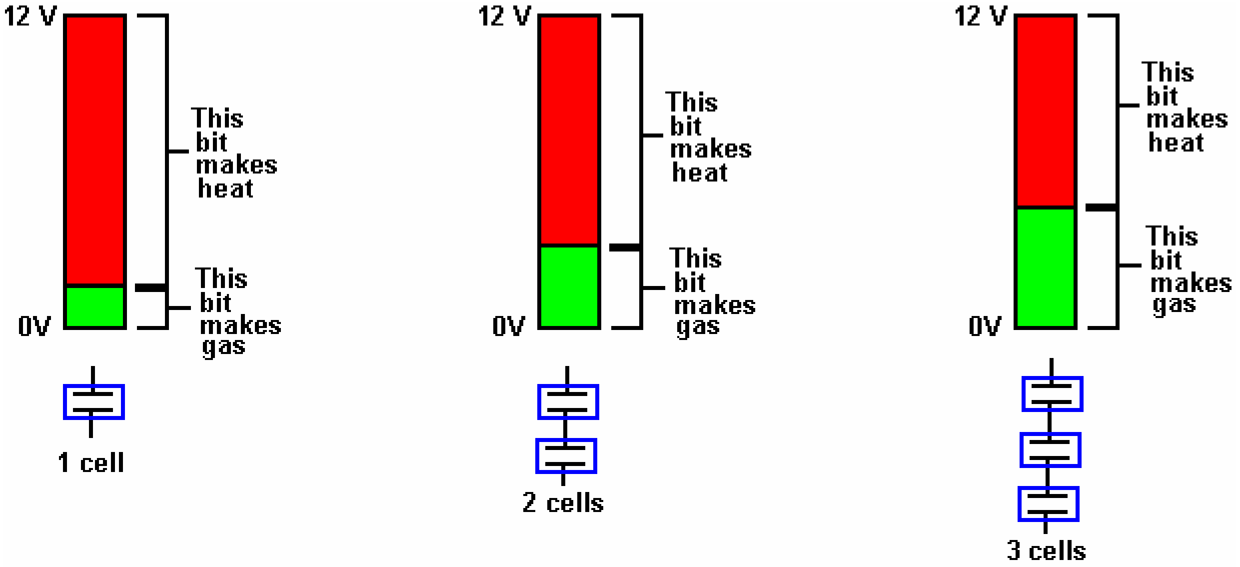

The best electrode material for the plates is 316L-grade stainless steel. It is hard to believe, but there is a voltage drop across the plate, which makes it necessary to apply about 2 volts to the plates on each side of the cell. So, if you are running off 12 volts, then six cells in a row across the battery gives the maximum possible drive. With the engine running and providing almost 14 volts, seven cells gives the highest possible drive.

The electrolyte heating up is a wholly bad thing as it drives a good deal of water vapour out of the electrolyte and this mixes with the gas and is fed to the engine. Injecting water mist, which is a fine spray of water droplets, into an engine increases its performance due to the water expanding when it is heated. This improves both the engine power and the miles per gallon, and it makes the engine run cooler, which improves the life of the engine. But hot water vapour is a bad thing as it is already fully expanded and just gets in the way of the HHO gas, diluting it and lowering the power of the engine with no benefit at all.

As the voltage applied to the cell is pretty much fixed, the current flow can be controlled by the concentration of Potassium Hydroxide in the electrolyte and the plate area. Once the cell is built, the plate area is fixed, so the current is adjusted by controlling the amount of KOH added to the water.

There is a slight limit to this, in that the gas production increases with KOH concentration until the concentration reaches 28% (by weight). After that point, any increase in the concentration produces a **reduction** in the rate of gas production. General practice is to have a fairly low concentration of KOH which is found by trial. Bob Boyce of America, who is very experienced in this field, says that when mixing electrolyte, you should never add water to NaOH or KOH. Always start with water, and add the chemical to the water SLOWLY, stirring well and allowing the mixture to cool in between additions. Shelf life depends on how well the KOH or NaOH is sealed from the atmosphere. Carbon is an enemy to this process. Whether the KOH is in dry or liquid form, it will absorb carbon from CO_2 in the atmosphere, or any other source of free carbon. As this happens, the catalytic effect is diminished. The more carbon is absorbed, the less the catalytic efficiency of the electrolyte. So, if you wish to maintain maximum performance, it is crucial to keep air out of your dry or liquid chemical storage containers, AND away from the electrolyte in your cells.

5. The temperature of the electrolyte. The hotter the electrolyte, the higher the current which passes through it. This can be a snag. Suppose it is decided that the current through the cell is to be 10 amps and the electrolyte concentration adjusted to give that current when the engine is started. As time passes, the 125 watts of excess power drawn from the battery, heats the electrolyte, which in turn causes an increase in the current flowing through the cell, which causes even greater heating, which..... The result is positive feedback which can cause a runaway temperature effect.

This effect is aggravated by the water in the cell being used up as the vehicle drives along. This raises the concentration of the electrolyte because the amount of KOH remains the same while the amount of water reduces.

There are different ways of dealing with this problem. One is to reduce the concentration of KOH so that the chosen current is only reached when the electrolyte has reached its maximum working temperature. This is a simple solution with the slight disadvantage that the gas production rate when starting is lower than it could be. However, the heating power is so high that it will not be long until the cell is operating at its maximum temperature.

A different way to handle the problem is to use an electronic circuit to limit the current through the cell to the chosen value by dropping the voltage applied to the cell. This has the disadvantage that the extra power is being dissipated in the electronics which then has a minor heat problem. Also, this solution does not improve the overall efficiency of the process.

The best way of all is to reduce the voltage applied to the cell by using more than one cell connected in a daisy-chain across the battery. With two cells, each will get about seven volts across it and the gas production will be doubled. If space in the engine compartment allows, a chain of six cells can be used which means each receives about two volts and the waste powers is reduced to some 10.6 watts per cell, while the gas production is six times higher. With the higher rate of gas production, it would probably be possible to reduce the chosen current flowing through the cell. Also, with six cells, the amount of water is six times greater and so there will be less concentrating of the electrolyte due to the water being used up. This is called a “Series-Cell” arrangement.

6. The number of bubbles sticking to the surface of the electrode plates. This is generally considered to be a significant problem. Many methods have been used to deal with it. Some people use magnets, others pump the electrolyte around to dislodge the bubbles, others use buzzers to vibrate the plates and some pulse the voltage to the cell at just the right frequency to vibrate the cell. Once the plates have become fully "conditioned" bubbles break away from them very easily and there is no need for any dislodging mechanism.

The electrolysers discussed above are used to improve the performance and efficiency of internal combustion engines running on fossil fuels. The optimum situation would be where the original fossil fuel can be dispensed with altogether and the engine run on water alone. This is not easy to do. It is not impossible to do. A few people have done it. The electrolyser described below is capable of running a suitable internal combustion engine. Excluding fossil fuels altogether does not cause any additional rust in the exhaust system or elsewhere in the vehicle since engines which are burning fossil fuels produces just as much water as they are effectively running on hydrogen anyway (which is why the fossil fuel is called a ‘hydrocarbon’ fuel, being made up of hydrogen and carbon).

To increase the amount of gas produced by a DC electrolyser, it is necessary to increase the current through the cells by a major amount or increase the number of cells in the electrolyser, or both.

Bob Boyce is a most experienced and knowledgeable series-cell designer, and sincere thanks are due to him for sharing his design freely with everybody and for his continuous help, advice and support of the builders of electrolysers. Bob achieves a massively increased gas production rate by using an electrolyser with a large number of cells in it. Bob’s electrolyser is easily the most effective available at this time. It uses one hundred cells (101 plates) and applies a sophisticated pulsing waveform which raises the operational efficiency far above that envisioned by the science textbooks available today. Units with just 60 cells are inclined more to brute-force DC electrolysis, tending to mask the gains produced by pulsing. As there is a voltage drop across each stainless steel electrode plate, it is usual to allow about 2 volts across each cell for DC operation. However, Bob finds that for high-efficiency pulsing, the optimum voltage for each cell with 316L-grade stainless-steel electrode plates is about 1.5 volts. This means that a voltage of about 1.5 x 100 = 150 volts is needed to power it to its maximum pulsed output.

To get this higher voltage, Bob uses a 110 Volt inverter. An inverter is a common, commercially available electronic circuit which usually has a 12 Volt DC input and generates a 110 Volt AC output. These are readily available for purchase as they are used to run (US) mains equipment from car batteries. The output from the inverter is converted from Alternating Current to pulsing Direct Current by passing the output through four diodes in what is called a 'Diode Bridge'. These are readily available at very low cost from electronic component suppliers.

Obviously, it would not be practical to use a hundred self-contained cells daisy-chained together to act as the series-connected electrolyser cell. There would not be enough physical space in the engine compartment for that, so a different style of cell construction is needed. The view looking down on several separate electrolyser cells could be represented something like this:

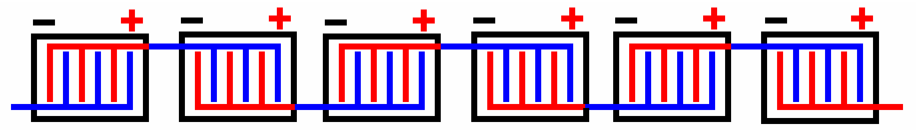

Top view of an electrolyser

Here the plus side of each cell is connected to the minus side of the next cell to provide a set of six interconnected cells acting in series. The current flowing through the electrolyser goes through each cell in turn and so each cell receives exactly the same current as the other cells. This is the same sort of arrangement as using six self-contained cells in a daisy-chain. To reduce the physical size of the unit, it is possible to construct the electrolyser as shown here:

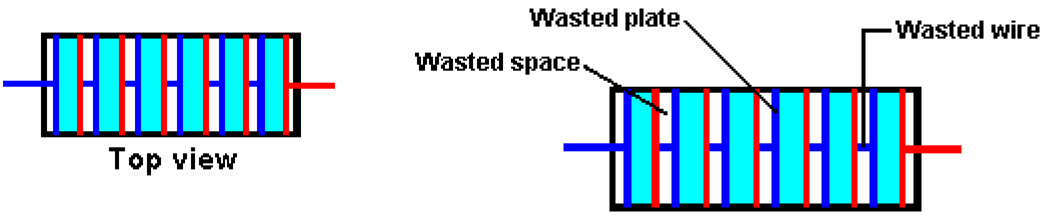

In this arrangement, the individual cells have just one positive plate and one negative plate. The plates slot into the sides and bottom of the housing so that the electrolyte is trapped between the plates and an air gap is formed between the plus plate of one cell and the minus plate of the next cell.

These air gaps are wasted space. They contribute nothing to the operation of the electrolyser. Each consists of a metal plate, a gap and a wire connection to the next metal plate. From an electrical point of view, the two metal plates at the opposite ends of these gaps, being connected by a wire link, are effectively the same plate (it is just a very thick, hollow plate). These air gaps might as well be eliminated which would save one metal plate and one wire link per cell. This can be difficult to visualise, but it produces an arrangement as shown here:

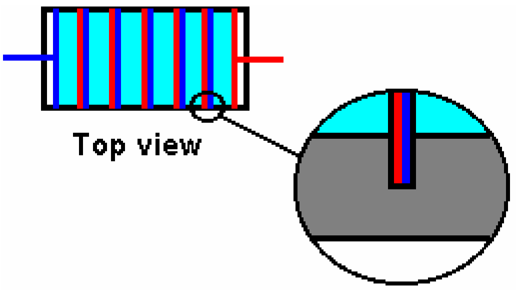

The only air gaps remaining are at the ends of the electrolyser. The plates in the middle are notionally touching each other. The positive plates are marked in red and the negative plates are shown in blue. In reality, there is only one metal plate between each cell and the next cell - the red and blue marking is only a notional device to try to make it easier to see that the diagram actually shows six separate cells in a single housing. They are separate cells **because** the metal electrode plates extend into the base and sides of the housing, thus isolating the six bodies of electrolyte from each other. It is very important that the different bodies of electrolyte are fully isolated from each other, otherwise the electrolyser will not act as a series-connected unit and most of the current will skip past the middle plates and just run from the first plate to the last plate around the sides of the other plates. So, the plates need to be a fairly tight push-fit in grooves cut in the sides and base of the housing. The electrolyte level must always be below the top of the plates as shown here:

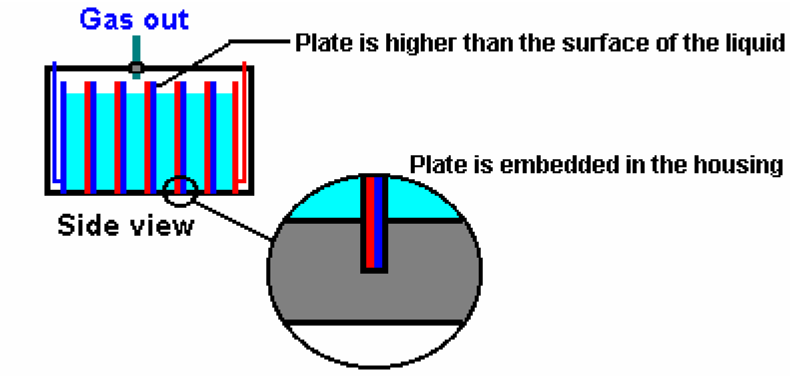

An electrolyser with a hundred cells, built in this style will have 101 metal plates and 100 separate bodies of electrolyte. In spite of these large numbers, the size of the overall unit does not have to be excessive. The spacing between the plates is set to, say, 3 mm (1/8 inch) and the plate thickness might be 16 gauge (1/16 inch), so the width of a 100-cell electrolyser is about 20 inches. In actual practice, the gaps at the end of the electrolyser may also contain electrolyte although that electrolyte takes no part in the electrolysis process.

The size of the plates may be determined by the space available in the engine compartment. If there is a large amount of spare space, then the plate size may be selected by allowing from two to four square inches of area on both sides of each plate, per amp of current. Each side of every plate is in a different electrolysis cell so a 6-inch by 6-inch plate will have 36 square inches on each face and so would carry between 36 / 4 = 9 to 18 amps of current. The choice of current is made by the builder of the electrolyser and it will be influenced by the size and cost of the inverter chosen to drive the electrolyser and the allowable current draw from the battery. This is for straight DC electrolysis where the battery is connected directly across the electrolyser. Using Bob's triple-oscillator electronics pulser card, the electrolyte level has to be kept down to about three inches from the top of the six inch plate because the gas production rate is so high that there has to be substantial freeboard to stop the electrolyte being splashed all over the place.

Bob usually uses a 6" x 6" plate size. It is essential that every item which contains HHO gas is located outside the passenger compartment of any vehicle. Under no circumstances should the electrolyser or bubbler be located in the passenger area of the vehicle, even if pop-off caps are provided and a second protective outer housing is provided, as the explosive force is so great that permanent hearing damage would be a serious possibility.

For straight DC operation of an electrolyser of this type, the circuitry is very straightforward. The inverter should be mounted securely, preferably in the stream of air drawn in to cool the radiator. Using a diode "bridge" of four diodes converts the stepped up AC output of the inverter back into pulsing DC and produces the electrical arrangement shown here:

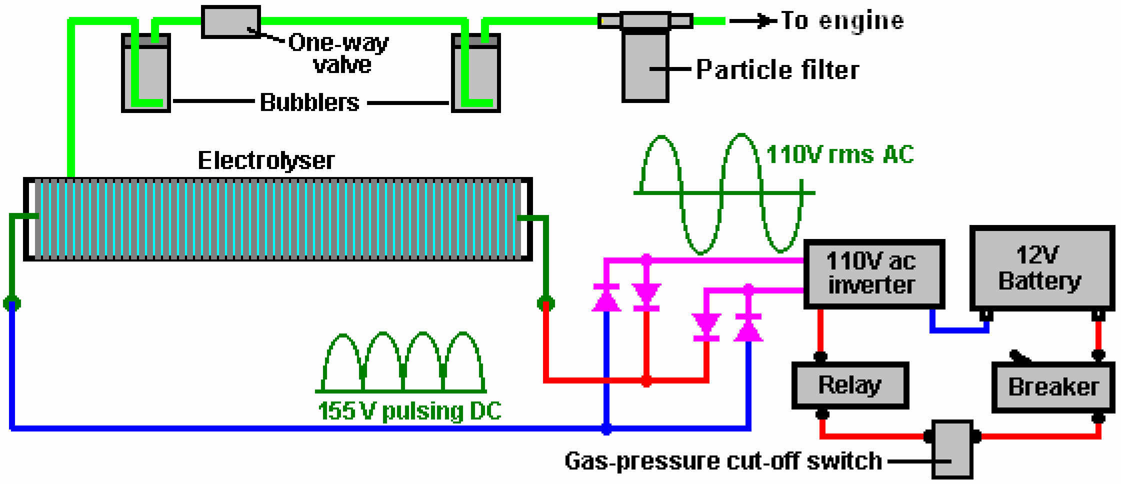

As mains voltage is quoted as an average figure ("root-mean-square") it has a peak voltage of 41% more than that. This means that the pulsing DC has a voltage peak of just over 150 volts for the nominal 110 volt AC output from the inverter.

The one-way valve shown between the two bubblers, is to prevent the water in the bubbler mounted beside the electrolyser, being driven into the electrolyser in the event of an explosion in the bubbler mounted beside the engine. The bubblers and the particle filter remove all traces of electrolyte fumes from the gas as well as protecting against any accidental igniting of the gas caused by the engine misfiring.

The very famous Michael Faraday who was an exceptionally gifted experimenter, placed two electrodes in water and determined how much gas was produced per amp of current. Using an electrolyte and recent tenchology when running on DC, Bob Boyce would not consider an electrolyser properly constructed, cleansed and conditioned until it was producing more than double Faraday's gas production rate. A typical working electrolyser made by Bob would have about 216% of Faraday's result. People taught in universities and unaware of current technology, use Faraday's result in calculations and those calculations indicate that it would take more energy to produce HHO gas than could be produced by then burning the hydrogen produced. Their calculations are wrong. The energy in freshly made HHO gas is typically four times more energetic than hydrogen is and so those calculations are too low by a factor of more than eight times. Also, the majority of energy from burning HHO comes from "charged water clusters" (see chapter 10) and not from the hydrogen, and most of these good people doing the calculations have never even heard of charged water clusters, and so, they accept the "can't be done" verdict without thinking about it.

Pulsed Operation

If you have already read chapter 10, you will know that the next step forward in raising HHO production is to apply a suitable pulsed waveform to the electrolyser terminals rather than just a straight DC voltage. Doing this with the design of Bob Boyce raises the cell efficiency to around ten times the result produced by Michael Faraday. Bob Boyce's highly efficient pulsed electrolysis system has been very generously shared freely by Bob so that anyone who wishes may construct one for their own use without the payment of a licence fee or royalties. Just before presenting the details, it should be stressed that in order to get Bob's performance of up to 1,000% of the Faraday (supposed) maximum gas output, each step needs to be carried out carefully exactly as described. Much of the following text is quoted from Bob's forum posts and so should be considered as his copyright, not to be reproduced without his permission.

Your Responsibility:

If you decide to construct an electrolyser of this, or any other design, you do so wholly on your own responsibility, and nobody is in any way liable for any loss or damage, whether direct or indirect, resulting from your actions. In other words, you are wholly responsible for what you choose to do. I say again, this document must not be construed as an encouragement for you to construct this or any other electrolyser.

Bob's electrolyser splits water into a mixture of gases, mainly hydrogen and oxygen. That gas mixture, which will be referred to as "HHO" is highly explosive and must be treated with respect and caution. A fairly small volume of HHO gas exploded in air is quite liable to cause permanent hearing loss or impairment due to the shock waves caused by the explosion. If HHO gas is ignited inside a sealed container, then the resulting explosion is liable to shatter the container and propel shrapnel-like fragments in all directions. These fragments can cause serious injury and every precaution must be taken to ensure that an explosion of that nature never happens. Bob uses two bubblers and a one-way valve to protect against this occurrence, and details of these are given in this document.

To make the water inside the electrolyser carry the necessary current, potassium hydroxide (KOH) is added to distilled water. This is the best electrolyte for an electrolyser of this type. Potassium hydroxide is also known as "caustic potash" and it is highly caustic. Consequently, it needs to be handled carefully and kept away from contact with skin, and even more importantly, eyes. If any splashes come in contact with you, it is very important indeed that the affected area be immediately rinsed off with large amounts of running water and if necessary, the use of vinegar which is acidic.

This electrolyser design uses a toroidal transformer to interface the electronics to the electrolyser cells. It is vital that this transformer be used very carefully. Under no circumstances may this transformer be powered up by the electronics when connected to anything other than the filled electrolyser cells as they act as a safety buffer. When driven by Bob's electronics, this transformer draws additional energy from the environment. While this is very useful for electrolysis, there are sometimes unpredictable energy surges which can generate as much as 10,000 amps of current. If one of these should occur when the transformer is not connected to the electrolyser which is able to soak up this excess, the resulting electrical conditions can be very serious. If you are lucky, it will just burn out expensive components. If you are not lucky, it can cause a lightning strike which is liable to hit you. For that reason, it is absolutely essential that the toroid transformer is never powered up with the secondary winding connected to anything other than the filled electrolyser.

Patenting:

It should be clearly understood that Bob Boyce, has released this information into the public domain and it has been displayed publicly since early in 2006. It is not possible for any part of this information to be made part of any patent application anywhere in the world. This prior public disclosure of the information prevents it being patented. It is Bob's intention that this information be freely available to people world-wide. It should also be emphasised that all of the quotations of Bob's words which is a very extensive part of this document, remain the copyright of Bob and may not be reproduced for display or sale without his prior written permission.

The Objective:

This is a "HHO-On-Demand" ("HOD") system. It is very difficult indeed to generate HHO gas fast enough to power an internal combustion engined vehicle under all road conditions. Moving from standstill to rapid acceleration causes such a massive sudden requirement for additional volumes of HHO gas, that it is difficult to provide that volume instantly.

A better solution is to use an electric engine for the vehicle. This can be an electric vehicle which was designed from scratch as such, or it can be a standard vehicle which has been adapted for electric engine use. These electric vehicles are usually limited in how far they can travel, but a good solution to this is to use an electrical generator to charge the batteries, both when the vehicle is in use and when it is parked. This electrolyser can be used to run such a generator on water as shown in chapter 10. With this arrangement, there are no CO_2 emissions and the vehicle is very environmentally friendly. The batteries provide the necessary sudden acceleration demands and the generator recharges the batteries during normal driving.

Overview:

Bob's pulsed system has the following components:

1. An electrical connection to the vehicle's electrical system (with safety features built in).
2. An "inverter" which raises the electrolyser voltage to about 160 volts.
3. Bob's specially designed circuit board which generates a complicated water-splitting waveform.
4. Bob's specially designed toroidal transformer which links Bob's circuit board to the electrolyser.
5. Bob's specially prepared 101-plate series-connected electrolyser.
6. A dual-protection system for linking the electrolyser safely to the internal combustion engine.

None of these items is particularly difficult to achieve, but each needs to be done carefully and exactly as described, paying particular attention to the detailed instructions.

Building the Case:

The case needs to have very accurate slots cut in it. If you do not have a milling machine, then you might consider getting a fabrication shop to mill the slots for you. The case has two ends, two sides, one base and one lid. Of these, the two sides and the base need 101 accurate grooves cut in them. The grooves are there to hold the electrode plates securely in position, and have to be cut extremely accurately. The groove width is set at 0.0003" **less** than the actual, measured plate thickness. This prevents any electrical flow around the plates. If you do not have the equipment to do this, then there is an enthusiast who is willing to do the cutting for people in the USA (and possibly elsewhere) at reasonable price. To contact him for pricing and delivery details, send an e-mail to eholdgate@tampabay.rr.com.

Many people ask about moulding the slotted sides but this is physically impossible to do to the accuracy needed and the cell performance depends on plate spacing to very high accuracy and slot width to even higher accuracy. This is not a backyard construction quality job and there are very, very few people with both the equipment and skill to complete the construction to this degree of accuracy.

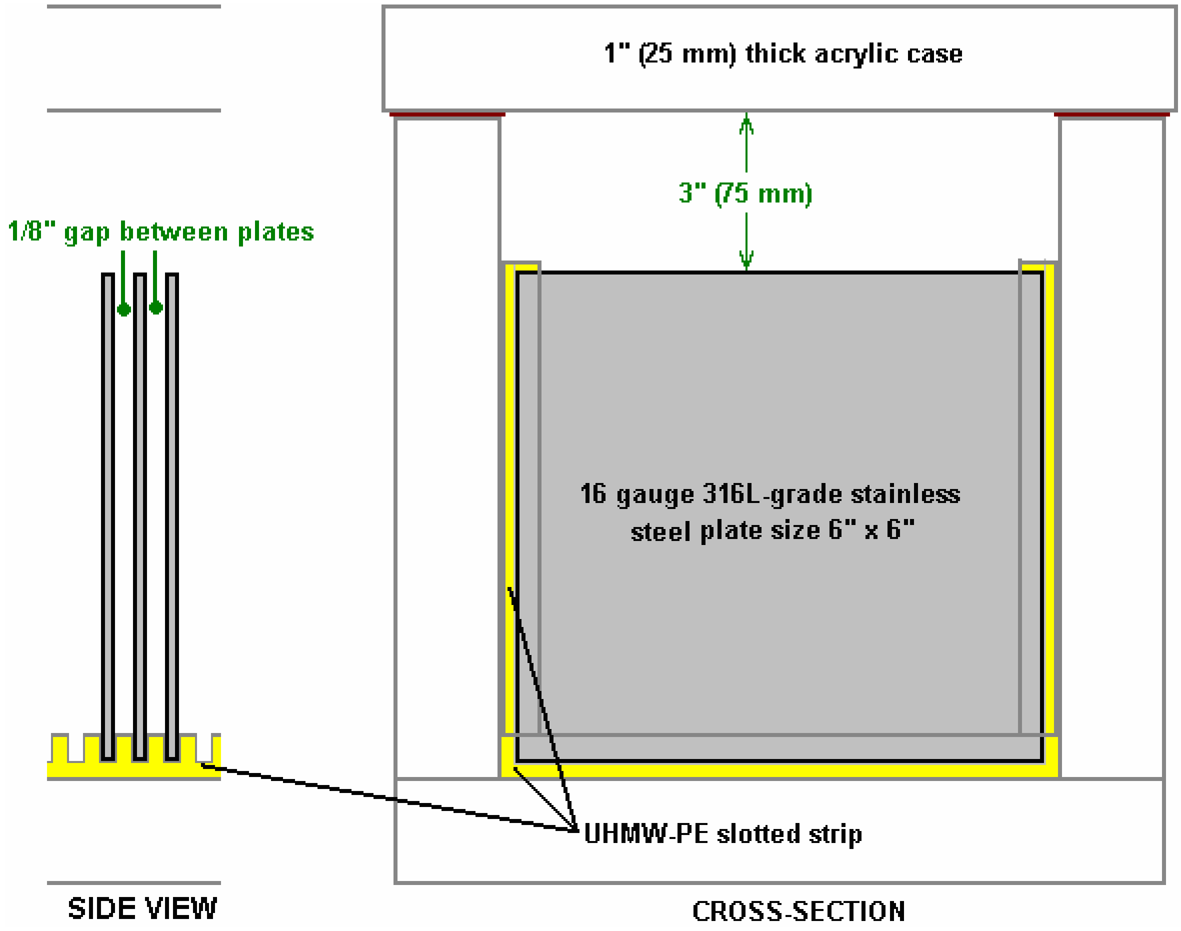

The base and two sides of the cell could have grooves cut in them to take the plates. This is not a good idea for various reasons, including the fact that the steel plates expand when they warm up and are liable to crack the acrylic case unless the slots are cut deeper than normal. Also, it is difficult to cut very accurate slots in acrylic due to the heat of the cutting blade causing the acrylic to deform in the immediate area. Grooved acrylic is very much weaker and breaks easily due to the planes of weakness introduced into the material.

Using Ultra High Molecular Weight Poly Ethylene or High Density Poly Ethylene (food chopping-board material) strips is a much better technique as that material does not have the same cutting heat problem and it can also take the plate expansion much better, so it is the construction method of choice. It is also a cheaper material.

The grooves which are cut for the plates should be three thousandths of an inch wider than the thickness of the plates. A good plate thickness is 16 gauge sheet which is one sixteenth of an inch thick or 0.0625 inch (1.5875 mm), so the recommended groove width for that is 0.0655 inches which is not a convenient fraction being about four and one fifth sixty-fourths of an inch. The grooves are 1/8” (3 mm) deep.

The supplier of the acrylic sheet needed for making the case, will be able to supply “glue” specifically designed for joining acrylic sheets together. This glue actually welds the plates together so that the sheets become one continuous piece of acrylic along the joint. Start by mating the sides and the base. Insert two or three plates into the slots to be quite sure that the alignment is spot-on during the joining process. Line the ends up during jointing to be sure that the sides are completely square when being joined to the base.

Concerns have been expressed about the strength of the acrylic casing under severe road conditions. So it has been suggested that the acrylic components be constructed from sheet which is 3/4” to 1” thick (18 mm to 25 mm) and the corners reinforced with angle iron secured with bolts tapped into the acrylic as shown below.

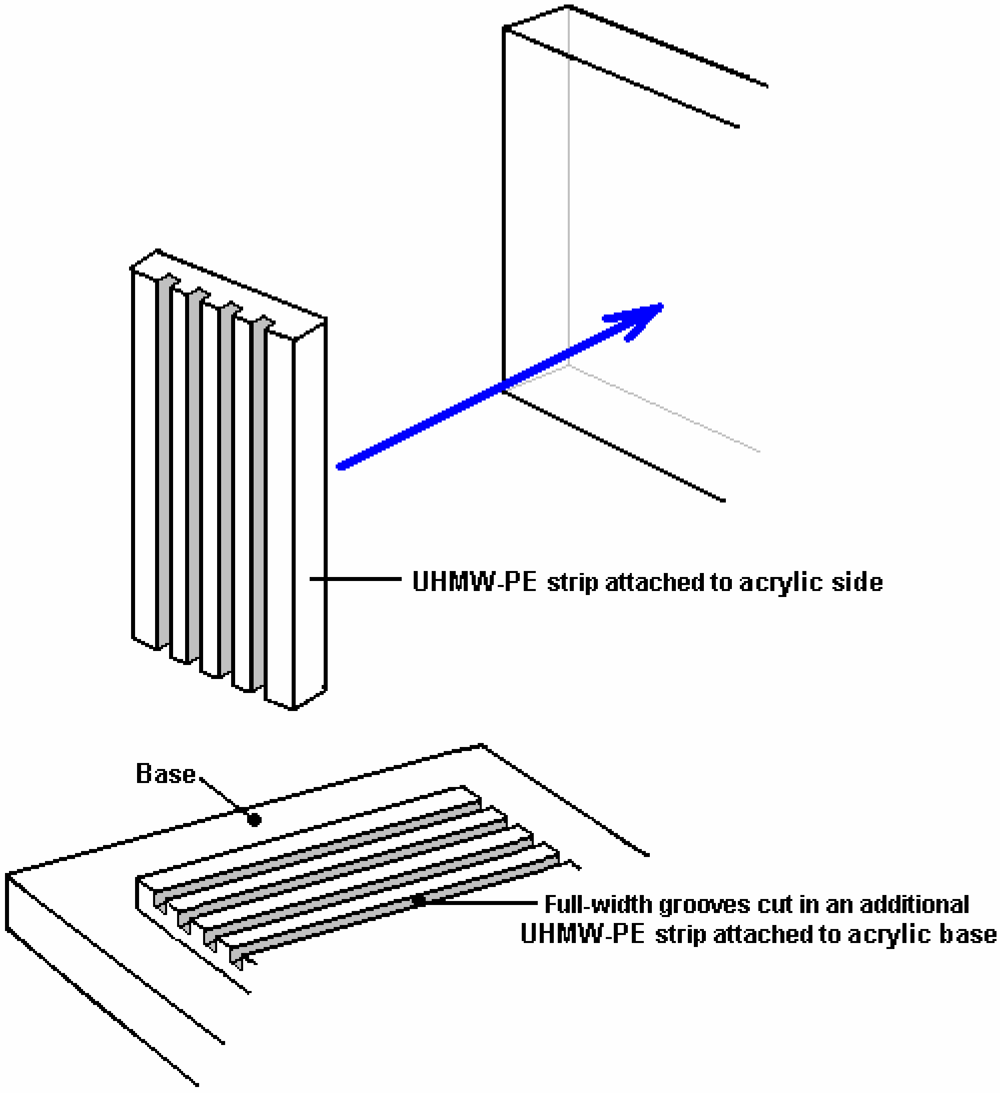

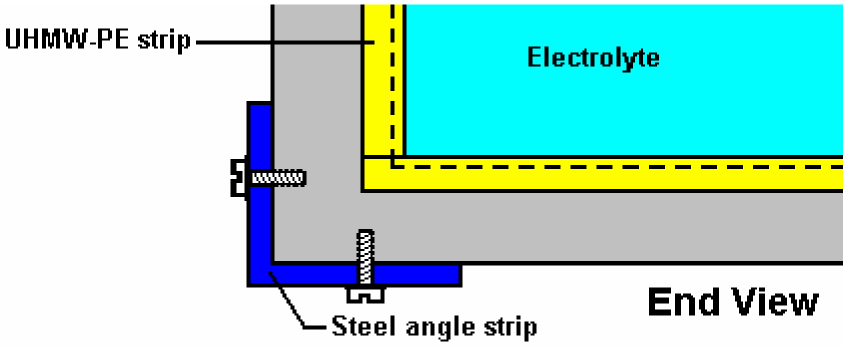

Here is a photograph of a 101-plate housing built by Ed Holdgate who works to a very high standard of accuracy and who prepares and sells these housings to anyone who is in the process of constructing a Bob Boyce electrolyser (Ed's web site accepts orders for these ready-made electrolyser housings and is at http://www.holdgateenterprises.com/Electrolyzer/index.html) :

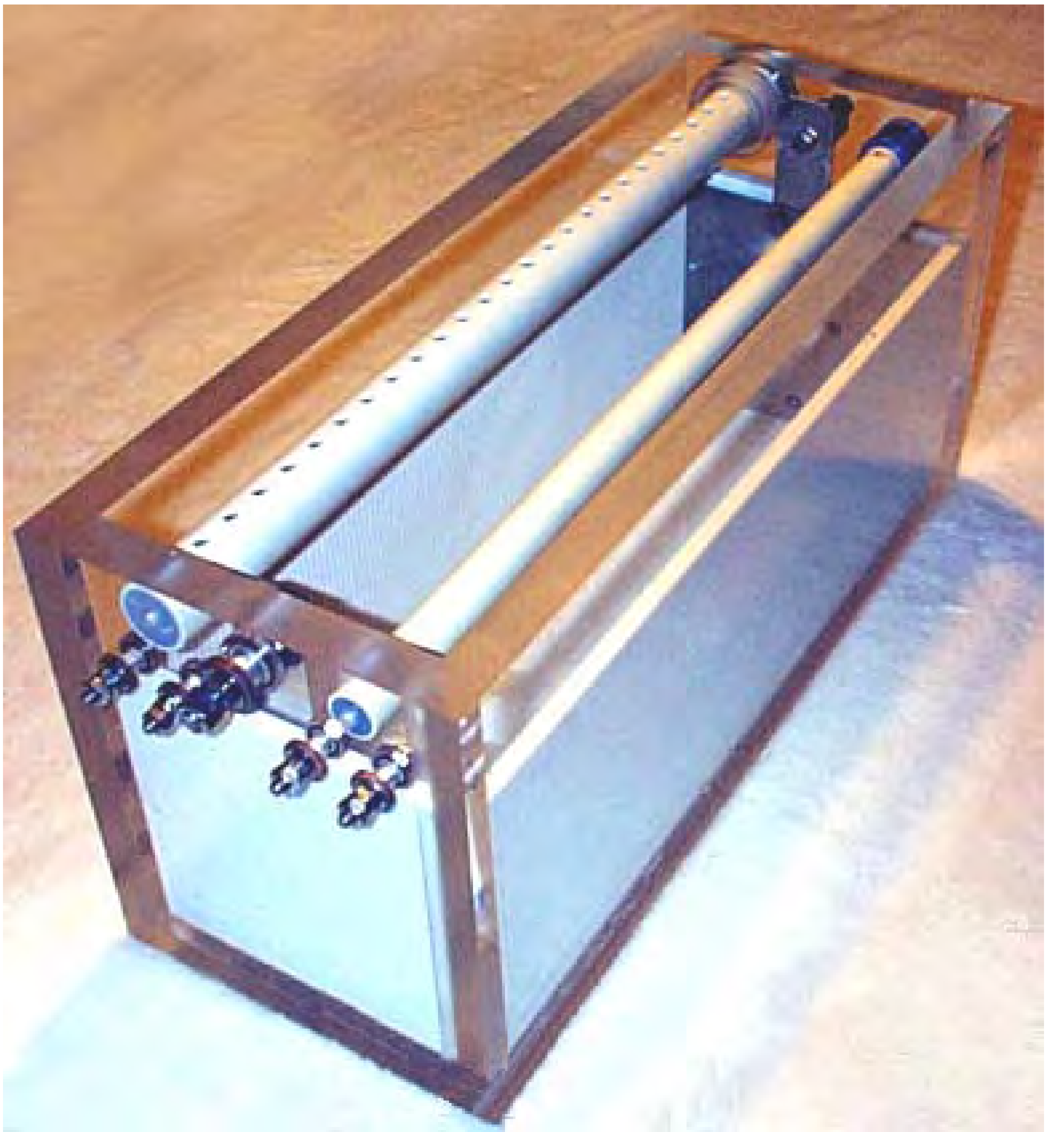

This housing looks very simple and straightforward, but this is highly misleading and the materials are very expensive, so any error is costly. The construction accuracy needed is very high indeed with many opportunities for a total and expensive disaster. Ed Holdgate has built several custom fixtures to ease the construction, but construction is still very difficult even with these specialist fittings and his years of experience. "Sikaflex 291" or "Marine Goop" marine bedding compound can be used to seal between the two slotted sides and the slotted base, and between the slotted sides and the two end inserts, in order to prevent any leakage between the acrylic and any of these inserts.

The accuracy required for the slots to hold the stainless steel plates is 0.0003" and the plates are tapered with a belt sander on both sides along all four edges so that when they are forced into the slots they will not cut into the sides of the slots. This produces excellent leakage characteristics, but don't lose sight of the very high accuracy of the slot cutting needed for this. The edges of the slotted inserts receive a bead of Sikaflex marine bedding compound attaching them to the acrylic box and the compound is allowed to cure before construction is continued.

The end plates with the stainless steel straps welded to them are used to connect the electrical supply to the plates, keeping any connection which could possible work loose and cause a spark, completely outside the housing. Even though the straps are welded and there is no likelihood of them coming loose, the welds are still kept below the surface of the electrolyte.

Getting and Preparing the Plates:

A set of 101 plates is needed for the electrolyser. The material used when making the plates is very important. It should be 16-gauge 316L-grade stainless steel as it contains a blend of nickel and molybdenum in the correct proportions to make it a very good catalyst for the pulsing technique. You can try your local steel stockists to see if they can supply it and what their charges would be. One satisfactory stainless steel supplier which Bob has used is Intertrade Steel Corp., 5115 Mt. Vernon Rd SE, Cedar Rapids, IA 52406. Do not buy from eBay as you have no real comeback if the plates supplied are dished due to having been flame cut.

It is very important indeed that when asking for a quote that you make sure that the supplier is aware of the accuracy you require. The plates need to be flat to a tolerance of +/- 0.001 inch after cutting and this is the most important factor. That level of accuracy excludes any kind of flame cutting as it produces inevitable heat distortion. With shearing, expect +/- 0.015 inch on the cuts and +/- 0.001 inch on flatness. Laser cutting produces much higher accuracy and you can expect as good as +/- 0.005 inch on cuts and there is no spec needed for flatness since laser cutting does not distort the edges like shearing does.

The plates are square: 6 inches by 6 inches, but that does not represent 36 square inches of active surface area as some plate area is inside the grooves and some of each plate is above the surface of the electrolyte. Another point to remember is that 101 steel plates this size weigh a considerable amount and the completed electrolyser with electrolyte in it will weigh even more. It is essential therefore to have a case which is strongly built from strong materials, and if a mounting bracket is to be used, then that bracket needs to be very robust and well secured in place.

The preparation of the plates is one of the most important steps in producing an electrolyser which works well. This is a long task, but it is vital that it is not skimped or hurried in any way. Surprisingly, brand new shiny stainless steel is not particularly suitable for use in an electrolyser and it needs to receive careful treatment and preparation before it will produce the expected level of gas output.

The first step is to treat both surfaces of every plate to encourage gas bubbles to break away from the surface of the plate. This could be done by grit blasting, but if that method is chosen, great care must be taken that the grit used does not contaminate the plates. Stainless steel plates are not cheap and if you get grit blasting wrong, then the plates will be useless as far as electrolysis is concerned. A safe method which Bob much prefers is to score the plate surface with coarse sandpaper. This is done in two different directions to produce a cross-hatch pattern. This produces microscopic sharp peaks and valleys on the surface of the plate and those sharp points and ridges are ideal for helping bubbles to form and break free of the plate.

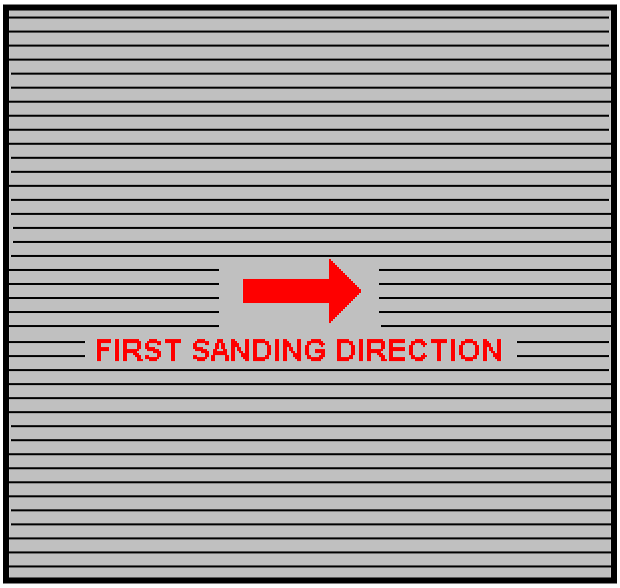

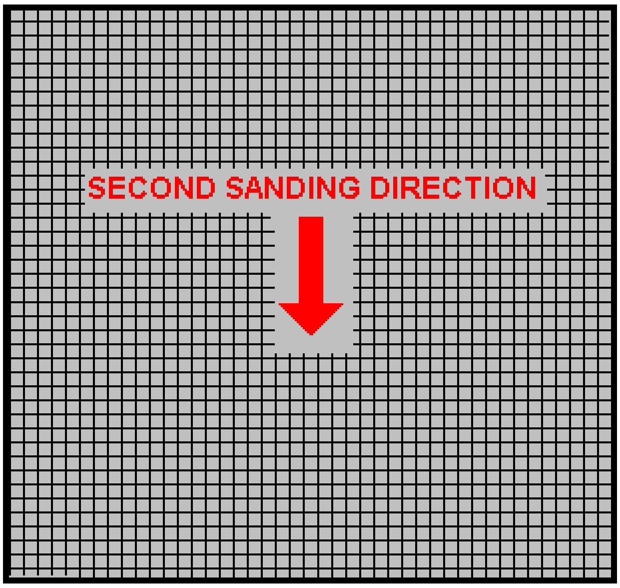

Bob Boyce uses a specially widened 48-inch belt sander which is good for preparing the plates using 60 or 80 grit. However, most people don't have this equipment and do the sanding by hand. Bob stresses that when doing hand sanding the sandpaper is drawn across the plates in **one** direction only and not backwards and forwards, as the backwards stroke always destroys the perfectly good ridges created on the forward stroke. Also, you only need two strokes in one direction before turning the plate through ninety degrees and completing the sanding of that face of the plate with just two more strokes (again, with **no backstroke**). Most people want to sand the plates far too much and if overdone to a major degree, that can reduce the plate thickness and cause electrolyte leakage through the slots around the plates. So, to say it again, to sand one face of a plate, use just two strokes in one direction, turn the plate through ninety degrees and finish that face with just two more strokes, both in the same direction.

Always wear rubber gloves when handling the plates to avoid getting finger marks on the plates. Wearing these gloves is very important as the plates must be kept as clean and as grease-free as possible, ready for the next stages of their preparation.

Any particles created by the sanding process should now be washed off the plates. This can be done with clean tap water (not city water though, due to all the chlorine and other chemicals added), but only use distilled water for the final rinse.

A point which is often missed by people constructing electrolysers is the fact that electrolysis is not just an electrical process, but it is also a magnetic process. It is important for maximum operating efficiency that the plates are aligned magnetically. In theory, stainless steel is not magnetic, but much of the stainless steel actually supplied to builders is slightly magnetic. When the plates arrive from the supplier each plate may have random magnetic characteristics. The easiest way to deal with this situation is to try to give the plates a mild magnetic orientation. This can be done quite simply by wrapping a few turns of wire around the stack of plates and passing some brief pulses of DC current through the wire.

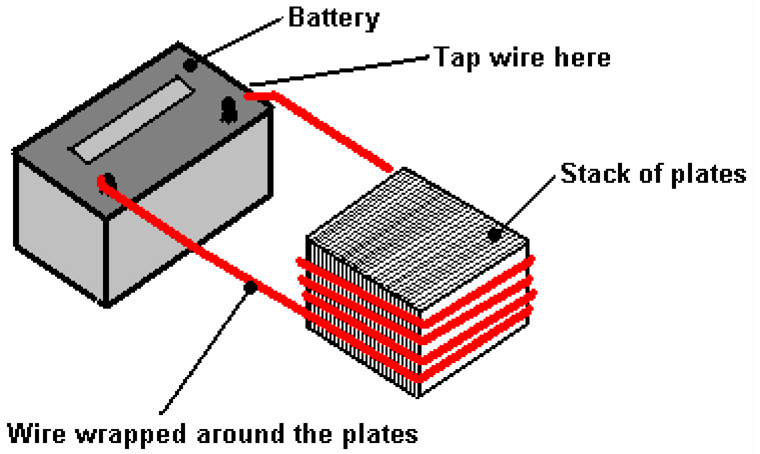

Obviously, the plates need to be kept in the same direction when being slotted into the case. The next step in the preparation process is to make up a weak solution of potassium hydroxide. This is done by adding small amounts of the potassium hydroxide to water held in a container. The container must not be glass as that is not a suitable material in which to mix the electrolyte.

Potassium hydroxide, also called KOH or “Caustic Potash”, which can be bought from various suppliers such as:
http://www.essentialdepot.com/servlet/the-13/2-lbs-Potassium-Hydroxide/Detail
http://www.organic-creations.com/servlet/the-653/caustic-potassium-hydroxide-KOH/Detail
http://www.aaa-chemicals.com/pohy2posa.html or
http://www.nuscentscandle.com/PHFLAKES.html While Potassium hydroxide (KOH) and Sodium hydroxide (NaOH) are the very best electrolytes, they need to be treated with care. The handling for each is the same:

Always store it in a sturdy air-tight container which is clearly labelled "DANGER! - Potassium Hydroxide". Keep the container in a safe place, where it can’t be reached by children, pets or people who won't take any notice of the label. If your supply of KOH is delivered in a strong plastic bag, then once you open the bag, you should transfer all its contents to sturdy, air-tight, plastic storage containers, which you can open and close without risking spilling the contents. Hardware stores sell large plastic buckets with air tight lids that can be used for this purpose.

When working with dry KOH flakes or granules, wear safety goggles, rubber gloves, a long sleeved shirt, socks and long trousers. Also, don’t wear your favourite clothes when handling KOH solution as it is not the best thing to get on clothes. It is also no harm to wear a face mask which covers your mouth and nose. If you are mixing solid KOH with water, always add the KOH to the water, and not the other way round, and use a plastic container for the mixing, preferably one which has double the capacity of the finished mixture. The mixing should be done in a well-ventilated area which is not draughty as air currents can blow the dry KOH around.

When mixing the electrolyte, **never** use warm water. The water should be cool because the chemical reaction between the water and the KOH generates a good deal of heat. If possible, place the mixing container in a larger container filled with cold water, as that will help to keep the temperature down, and if your mixture should “boil over” it will contain the spillage. Add only a small amount of KOH at a time, stirring continuously, and if you stop stirring for any reason, put the lids back on all containers.

If, in spite of all precautions, you get some KOH solution on your skin, wash it off with plenty of running cold water and apply some vinegar to the skin. Vinegar is acidic, and will help balance out the alkalinity of the KOH. You can use lemon juice if you don't have vinegar to hand - but it is always recommended to keep a bottle of vinegar handy.

Plate Cleansing:

Plate cleansing is **always** done with NaOH. Prepare a 5% to 10% (by weight) NaOH solution and let it cool down. A 5% solution 'by weight' is 50 grams of NaOH in 950 cc of water. A 10% solution 'by weight' is 100 grams of NaOH in 900 cc of water. As mentioned before, never handle the plates with your bare hands, but always use clean rubber gloves. Put the sanded and rinsed plates into the slots in the electrolyser case, keeping them all the same way round so that they remain magnetically matched. Fill the electrolyser with the NaOH solution until the plates are just covered.

A voltage is now applied across the whole set of plates by attaching the leads to the outermost two plates. This voltage should be at least 2 volts per cell, but it should not exceed 2.5 volts per cell. Maintain this voltage across the set of plates for several hours at a time. The current is likely to be 4 amps or more. As this process continues, the boiling action will loosen particles from the pores and surfaces of the metal. This process produces HHO gas, so it is very important that the gas is not allowed to collect anywhere indoors (such as on ceilings).

After several hours, disconnect the electrical supply and pour the electrolyte solution into a container. Rinse out the cells thoroughly with distilled water. Filter the dilute NaOH solution through paper towels or coffee filters to remove the particles. Pour the dilute solution back into the electrolyser and repeat this cleaning process. You may have to repeat the electrolysis and rinsing process many times before the plates stop putting out particles into the solution. If you wish, you can use a new NaOH solution each time you cleanse, but please realise that you can go through a lot of solution just in this cleaning stage if you choose to do it that way. When cleansing is finished (typically 3 days of cleansing), do a final rinse with clean distilled water. It is very important that during cleansing, during conditioning and during use, that the polarity of the electrical power is always the same. In other words, don't swap the battery connections over as that destroys all the preparation work and requires the cleansing and conditioning processes to be carried out all over again.

Plate Conditioning:

Using the same concentration of solution as in cleansing, fill the electrolyser with dilute solution up to 1/2" below the tops of the plates. Do not overfill the cells. Apply about 2 volts per cell and allow the unit to run. Remember that very good ventilation is essential during this process. The cells may overflow, but this is ok for now. As water is consumed, the levels will drop. Once the cells stabilise with the liquid level at the plate tops or just below, monitor the current draw. If the current draw is fairly stable, continue with this conditioning phase continuously for two to three days, adding just enough distilled water to replace what is consumed. If the solution changes colour or develops a layer of crud on the surface of the electrolyte, then the cell stack needs more cleansing stages. Do not allow the cells to overfill and overflow at this point. After two to three days of run time, pour out the dilute KOH solution and rinse out the electrolyser thoroughly with distilled water.

Cell Operation:

Mix up a nearly full-strength solution of potassium hydroxide (280 grams of KOH added to 720 cc of water) as it is 20% more effective in use than is sodium hydroxide. The filling of the electrolyser depends on whether straight DC electrolysis is to be used, or resonant electrolysis is to be used.

For straight DC electrolysis, fill the electrolyser to about one inch below the tops of the plates. The DC voltage applied to the electrolyser will be about 2 volts per cell or a little less, so this 100-cell electrolyser will have 180 to 200 volts applied to it. This voltage will be generated with an inverter.

For resonant operation, fill the electrolyser to only half the plate height because the HHO gas production is so rapid that room has to be left for the gas leaving the plates. With resonant operation, about 1.5 volts per cell is used.

Troubleshooting:

1. Abnormally low current is caused by improper plate preparation or severe contamination. Take the plates out of the electrolyser and start over again from plate preparation.

2. Abnormally high current is caused by high leakages between cells. This will require re-building or re-sealing of the electrolyser case.

3. If current starts higher then drops off, this means that the plates are contaminated. Take the plates out of the electrolyser and start over again from plate preparation.

Building the Electronics:

Resonant operation of the electrolyser requires the use of a DC pulsing system. Bob has designed an advanced system for this, consisting of a sophisticated electronics board and a finely-tuned toroidal transformer which interfaces and matches the electronics to the electrolyser. These are available in kit form from The Hydrogen Garage in America: http://hydrogengarage.com/home.html and these electronics boards produce three separate frequencies which are combined together to give a rich and complex output waveform further modified by the toroidal transformer:

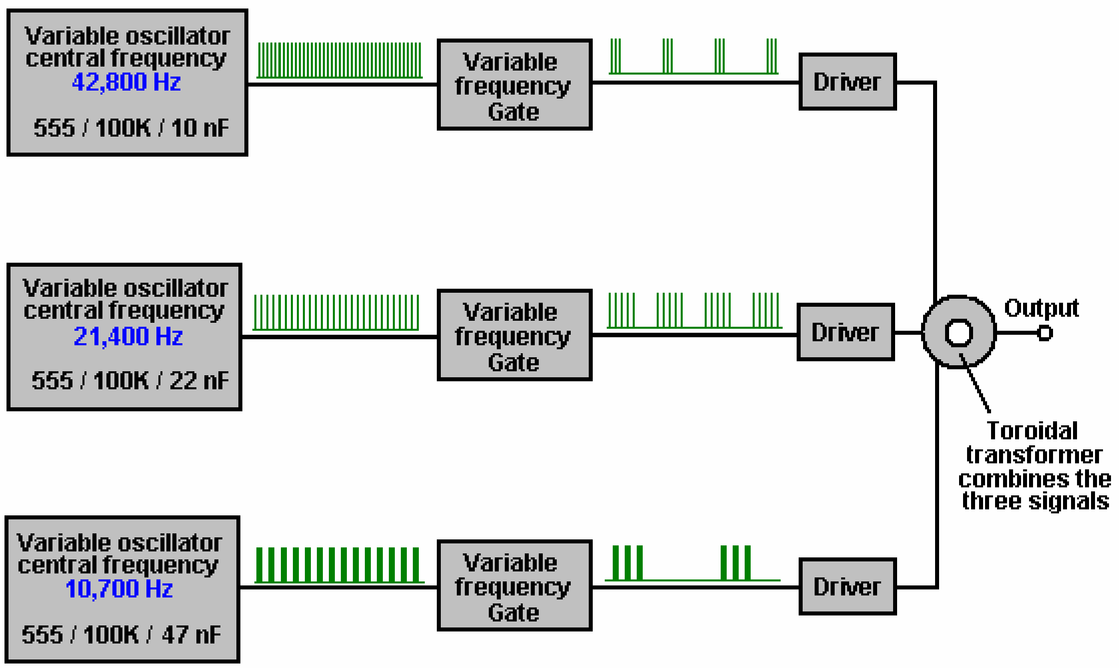

In Bob's electrolyser build, those frequencies were about 42.8 KHz, 21.4 KHz and 10.7 KHz but please don't get the wrong impression here, there is no single exact frequency or set of frequencies which should be used. The size and shape of your cell, the electrodes spacings, electrolyte density, electrolyte temperature and operational pressure are all factors which affect the tuning of the electronics. With Bob's large marine-duty cells with square twelve-inch plates, he found the base resonance point using his original, modified inverter, to be at least 100 Hz lower than that of the prototypes with smaller plate sizes. The triple-oscillator board can be tuned with an oscilloscope but if one is not available, then the preset resistors are set to their mid-point and then the 42,800 Hz frequency is adjusted very slowly to find the point of maximum gas output. This is a very precise point and it is essential to use high-quality preset resistors which vary their resistance very accurately. The aim is to adjust the frequency by as little as 1 Hz at a time. When the optimum point is found, then the procedure is repeated with the 21,400 Hz frequency generator, and finally the 10,700 Hz frequency adjustment. Last of all, the Mark/Space ratio presets are adjusted to give the lowest pulse width which does not reduce the rate of gas generation.

When he tried separate flooded cells connected in series, he was not able to get anything more than a marginal rise in performance over a broader range. He felt that this was due to each cell in the set having a slightly different resonant point which did not match very well with the other cells. Bob had to go to the series plate design with accurate spacing and tight tolerance on slots and plates in order to get the resonant responses to line up on all cells. Also, he found that some choices of electrolyte would not produce resonance at any frequency, though he is not sure why. Some worked well while others worked marginally, so Bob stuck with what worked the best for him - sodium hydroxide (NaOH) and potassium hydroxide (KOH).

It needs to be stressed here, that every electrolyser build is slightly different from all others, even though they may have been meant to be exactly the same. There will be small differences between the plates in one electrolyser and the plates in other electrolysers. The electrolyte concentration will be slightly different, the plate preparation will be slightly different and the overall magnetic characteristics will be unique to each actual build. For that reason, the tuning of the completed electronics board and the construction of the best possible transformer to match the electronics to the electrolyser, is always different for each electrolyser built.

The completed third-generation Boyce board looks like this:

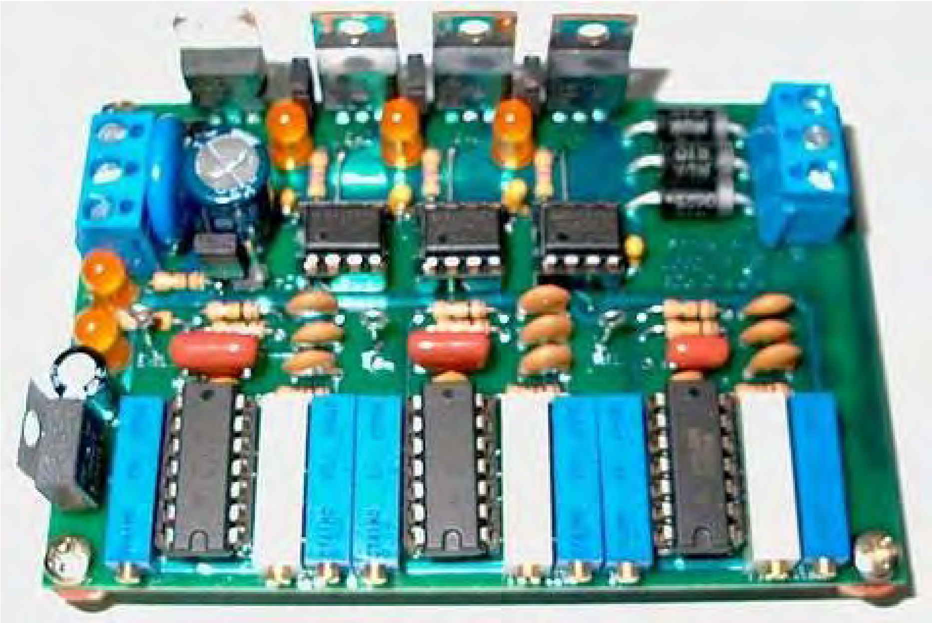

It is not too difficult to assemble this board as the printed circuit board can be purchased ready-made and a complete set of components can be ordered using the ordering system set up in the WorkingWatercar forum.

You should notice here, that the whole of the aluminium case is being used as a “heat-sink” to dissipate the heat generated in the FET driver transistors. These transistors are all bolted to the case and each has it’s own rectangle of mica “washer” between the transistor and the case. These pieces of mica pass heat very readily to the case, while at the same time, isolating the transistors electrically so that they will not interfere with each other. Notice too, the plastic support columns at each corner of the printed circuit board. These are used to mount the printed circuit board securely, while holding it away from the metal case and so preventing any possibility of the connections on the underside of the board being short-circuited by the case itself.

In some of the builds of the electronics board, it has been found that it is sometimes difficult to get the highest frequency oscillator operating correctly at around 42.8 KHz due to some NE556 chips being out of specification. Even though they should be the same, chips from different manufacturers, and even the same branded chip from different suppliers, can have slightly different actual specifications. On both the PWM3E and PWM3F boards, C4 has now been changed from 0.1 microfarad back to 0.047 microfarad to accommodate the corrected specs of the newer Texas Instruments NE556N chip (the one marked with MALAYSIA on top). The earlier versions of the NE556N chip had required a change to 0.1 microfarad to correct for specifications that were sub-standard. Depending on which chip you actually use in the "U1 - U3" board positions, you may have to adjust the value of C1, C3, and C4 to compensate for variations from the original 556 chip specification, or adjust some of the other timing component tolerances. The TAIWAN and other marked Texas Instruments chips will still work ok in the "U2" and "U3" locations, but there has been a big issue sourcing chips that will reach 43 kHz in the "U1" location. The MALAYSIA chips tested so far have been satisfactory.

Setting up the completed board:

Jumper J1: If this is short-circuited it disables all three Pulse-Width Modulators, for oscillator outputs only.
Jumper J2: If this is short-circuited it connects the MOSFET Gate Supply TB3 to +DC for a single supply.
Jumper J3: If this is short-circuited it connects the MOSFET Source to -DC for a common ground.
Jumper J4: If this is short-circuited it enables the input of the Auxiliary TTL Inputs 1, 2 and 3. This is a convenient test point for measuring the outputs of each of the three signal generator stages.
To enable the auxiliary inputs, the on-board generators must be disabled with SW1 switches 1, 2 and 3 as shown here:
Switch SW1: switching 1 on disables the Pulse-Width Modulation of oscillator 1
switching 2 on disables the Pulse-Width Modulation of oscillator 2
switching 3 on disables the Pulse-Width Modulation of oscillator 3
switching 4 on disables the Pulse-Width Modulation of all three oscillators

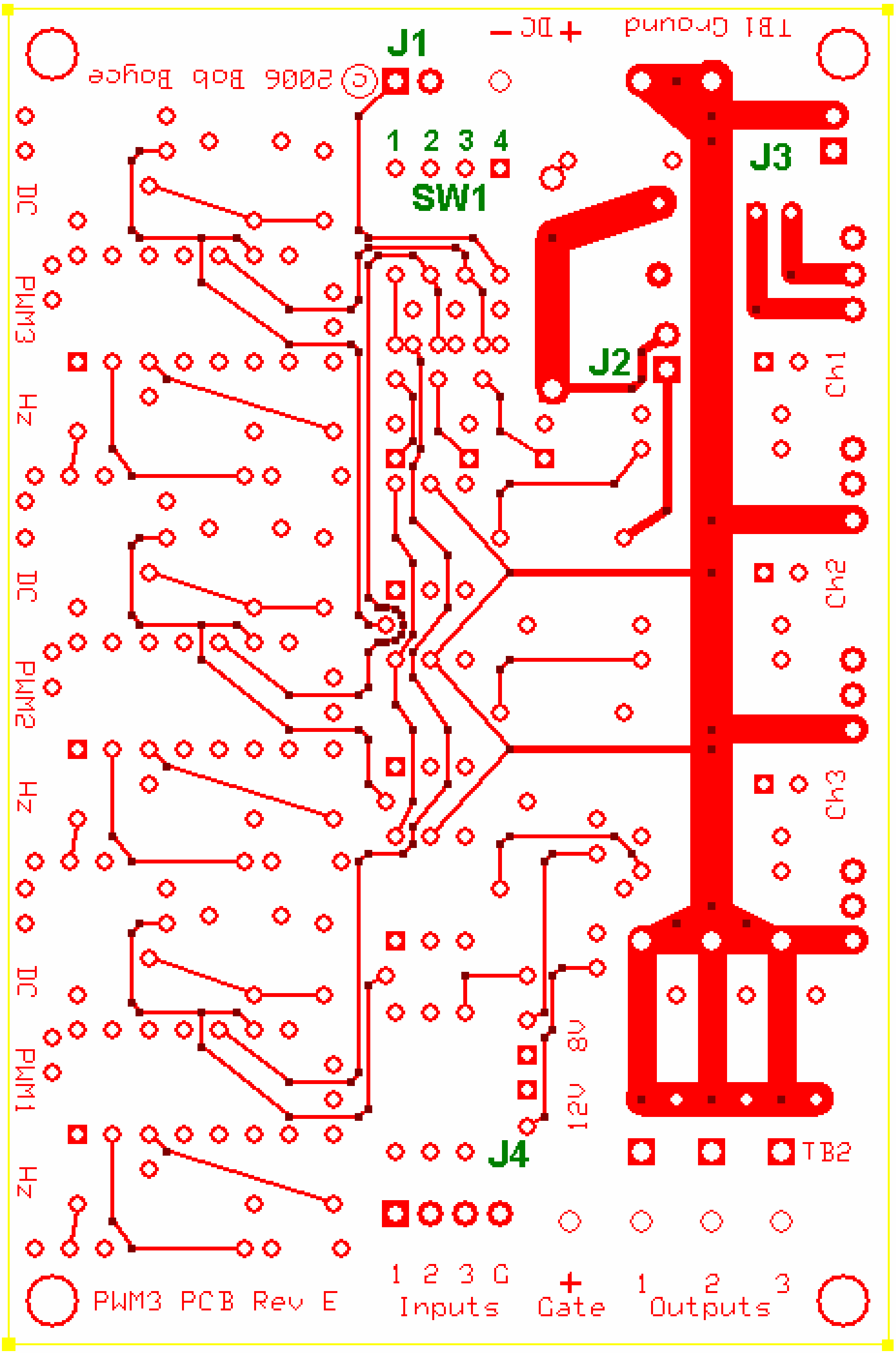

This board has been superseded

Terminal Block TB1: is the DC Power Input & MOSFET Source Ground

Terminal Block TB2: is the MOSFET Drain/PWM Outputs & MOSFET Gate Supply Input

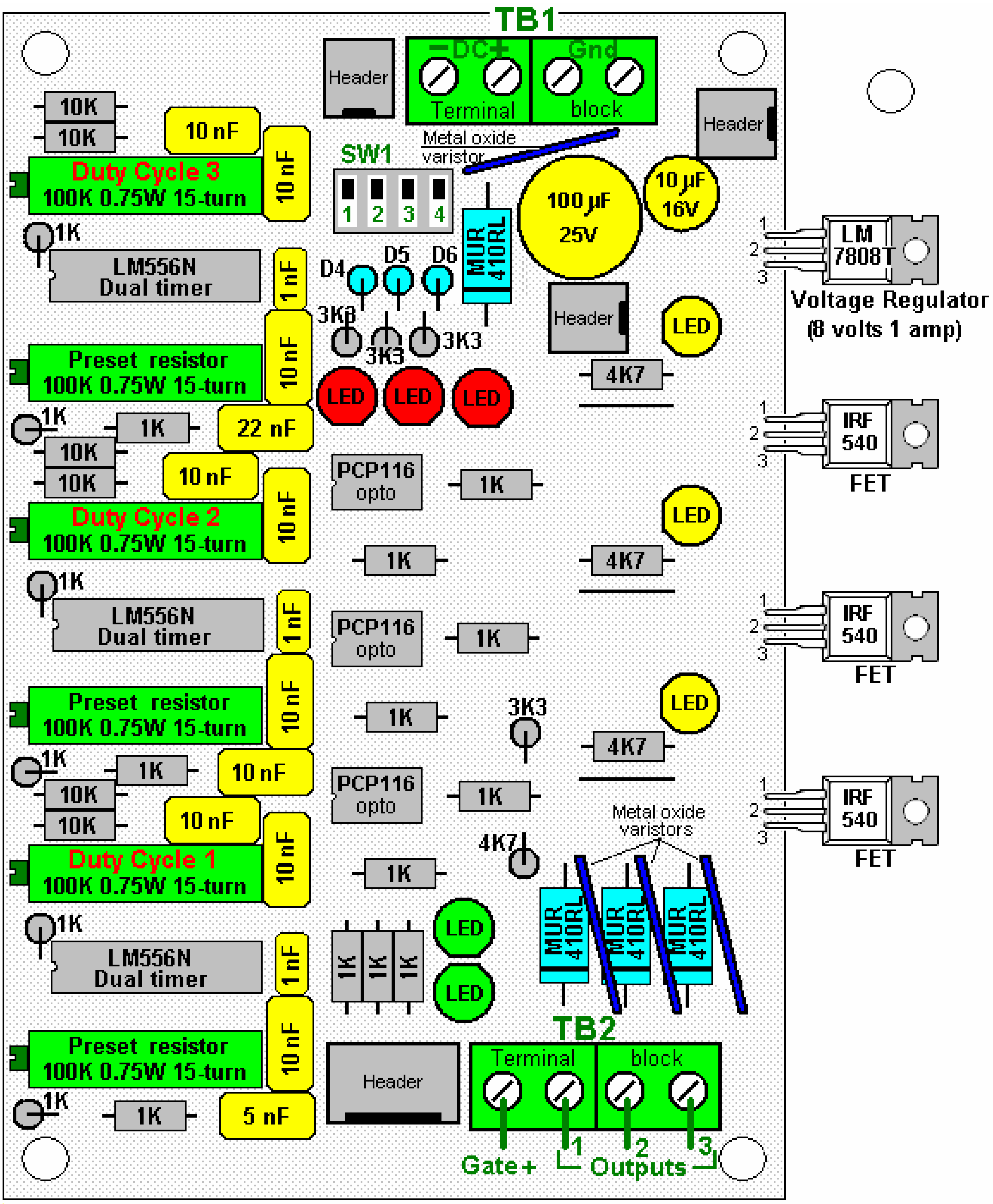

This board has been superseded

In more detail:

J1 is for the connection of an optional external control or safety shutdown device, such as a pressure or temperature limit switch. J1 is shorted to shut down waveform generation. For normal operation, J1 is left open.

J2 and **J3** are for optional voltage modification support. For normal operation, both J2 and J3 are shorted with 2 position jumper shorting blocks.

J4 is for the connection of optional auxiliary inputs. For normal operation, nothing is connected to J4. J4 can also be used to connect an oscilloscope to view the **P**ulse-**W**idth **M**odulator generator waveforms of channels 1, 2, and 3.

SW1 is for disabling PWM generator channels 1, 2, and 3 via switches 1, 2, and 3. Switch 4 is a master disable that turns off all 3 channels. For normal operation, all 4 switches are switched OFF.

Terminal Block TB1 has 4 connections as follows;

1. DC Input + is connected to the 13.8 V DC power supply positive connection via a 2-amp fuse or circuit breaker.

2. DC Input **-** is connected to the 13.8 V DC power supply negative connection. If a shorting plug is installed at J3, this wire is optional.

3. and **4.** Ground is connected to the 13.8 V DC power supply negative connection via heavy gauge wire. There are two wire connection terminals available so that two equal length wires may be used to reduce wire resistance losses.

Terminal BlockTB2 has 4 connections which are connected as follows:

Gate + is not normally connected when a shorting plug is installed at jumper J2.
Output 1 is connected to the “cold” side of primary 1 of the toroidal transformer.
Output 2 is connected to the “cold” side of primary 2 of the toroidal transformer.
Output 3 is connected to the “cold” side of primary 3 of the toroidal transformer.

The “hot” sides of primaries 1, 2, and 3 are brought together, and connected to the 13.8 V DC power supply positive connection via heavy-gauge wire and a 60-amp fuse or DC circuit-breaker.

Note: These fuses are for short circuit protection, and are not an indication of system power consumption.

Testing the completed board:

Do NOT connect the PWM3F outputs to a powered transformer until after the unit tests show it to be fully functional. You may pull the 60-amp fuse out, or trip the DC circuit-breaker, while testing and tuning.

Power up the PWM3F board and check the indicator LEDs for proper operation:

LED 1 - the Channel 1 output - should be lit in normal operation, off if disabled.
LED 2 - the Channel 2 output - should be lit in normal operation, off if disabled.
LED 3 - the Channel 3 output - should be lit in normal operation, off if disabled.

LED 4 - the PWM channel 1 disable **-** should be off in normal operation, on if disabled.
LED 5 - the PWM channel 2 disable **-** should be off in normal operation, on if disabled.
LED 6 - the PWM channel 3 disable **-** should be off in normal operation, on if disabled.

LED 7 - the 12 volt supply **-** should be lit in normal operation, off when powered down.
LED 8 - the 8 volt supply - should be lit when the power is connected and off when powered down.

If all indicators check out, then start the tuning procedure. If everything checks out ok except the output indicators, then try tuning first then test again. Failures may indicate component or soldering problems.

Tuning the board:

Adjust all 3 of the "DC" marked (Duty Cycle) potentiometers (R25, R27, R29) fully clockwise, for minimum pulse width.

Connect a frequency counter or oscilloscope to Jumper J4 pin 1 (Aux Input 3) and adjust the channel 3 "Hz" marked potentiometer (R28) for a reading of 10.7 KHz.

Connect a frequency counter or oscilloscope to Jumper J4 pin 2 (Aux Input 2) and adjust the channel 2 "Hz" marked potentiometer (R26) for a reading of 21.4 KHz.

Connect a frequency counter or oscilloscope to Jumper J4 pin 3 (Aux Input 1) and adjust the channel 1 "Hz" marked potentiometer (R24) for a reading of 42.8 KHz.

Note: If channel 1 shuts down while tuning towards 42.8 KHz, replace U1 with a different brand of NE556 type timer chip. Many of these chips, like those marked as made in Taiwan, do not fully meet the NE555 spec and will shut down with the output turned on solid. If this occurs while loaded, the output FET for that channel may be quickly destroyed. The Texas Instruments 556 chips marked as made in Malaysia have typically been tested to work ok at up to 45 KHz.

Once the board has been tuned as described above, verify output at the Terminal Block TB2 Outputs with an oscilloscope. Without a transformer connected, the indicator LEDs only lightly load the FETs, but enough to verify operation during testing. If all checks out ok up to this point, you should be ready to connect the transformer primaries and apply power.

Note: If you experience heating issues with any of the Metal Oxide Varistors M1, M2, and M3, they may be safely removed and left out, or replaced with slightly higher voltage MOVs. There have been some Metal Oxide Varistors that work properly, and some that do not. It seems to be a batch related issue.

Bob also says: The most common mistake that I see made is that when tuning for the common narrow (approx 2.5 uS) pulse width on all channels, most tend to tune for narrow POSITIVE going pulses at the FET outputs. That is totally inverse to proper pulse polarity for the PWM3 series boards. These boards use N channel FETs, so the proper pulses are narrow NEGATIVE going pulses. FET off condition results in a positive state on each of the outputs, proper FET switching pulls that positive state to ground as very narrow pulses.

The result of tuning inverse can be extreme overheat of the 556 chips, extreme overheat of the 8V regulator, and excessive primaries current in the toroid. This can overheat the toroid, burn traces on the board, and/or destroy the FETs, ect.

If the channel goes into frequency division when adjusting pulse width, then you have gone too far in your adjustment. These boards are not using the typical dual 555 (556) PWM coupling because that limits pulse width adjustment to 10% - 90%. This application requires much less than 10% pulse width.

Please remember that J1, J2, and J3, are only used to pull the FETs high through the indicator LEDs during preliminary adjustment. During operation, those jumpers must be removed to prevent interference to primaries operation.

Winding the Transformer:

The transformer in Bob's system is a very important component. It is an inductor, a transformer, and a source of energy-form conversion, all rolled into one. The transformer has been successfully duplicated and used by others, driven with Bob's triple-oscillator board, to achieve a resonant drive to the cells which results in a performance which is well beyond the maximum stated by Faraday.

The reason there are no step-by-step instructions for constructing the transformer is because it must be wound to match the load/impedance of the cells it will be driving. There is no "one-transformer-fits-all" solution for this. Bob uses a powdered iron core of 6.5" diameter for units up to 100 cells. The larger the diameter, the greater the power. Ferrite is fine for lower frequencies, but for this application, a powdered iron toroid core is essential. The MicroMetals core, part number "T650-52" is a suitable core and is available from http://www.micrometals.com/pcparts/torcore7.html and can be purchased in small quantities via their "samples requests", which can be submitted at http://www.micrometals.com/samples_index.html

The Micrometals T650-52 Toroidal Core

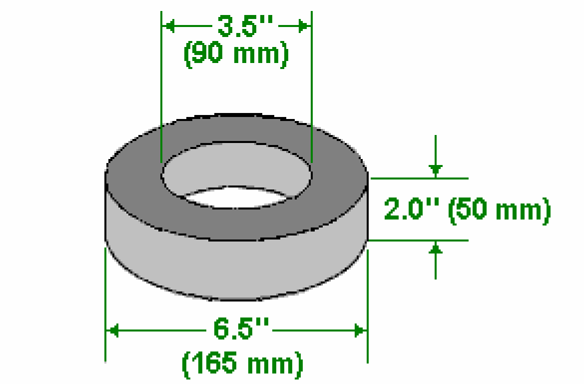

The primary of the transformer is 3-phase, while the secondary is single-phase. As most current flows along the outside of wires rather than through the middle of the wire, the choice and size of the wire chosen to wind the transformer is most important. Bob uses **solid** teflon-covered silver-plated copper wire. It is very important that this wire is solid core and **not stranded** as stranded wire does not work here (due to the generation of inter-strand, phase-differential induced eddy currents). At this time, a supplier of this wire is http://www.apexjr.com. Before any winding is done, the toroid is given a layer of tape. And the materials to be used are collected together, namely, the tape, the wire, the beeswax and the heat gun:

Of paramount importance with the toroid is that unlike traditional transformer design, the secondary is wound first, and the windings must be evenly spaced where they fan out from the center of the core. This means even though they are tightly packed right up against one another at the center hole, they must not be wound so that they bunch up and gap open around the periphery. Mistakes here will cause field errors that will lower the overall efficiency.

As you can see here, Bob uses short lengths of plastic strimmer cable as spacers for the outside of the toroid, though the picture above has been taken to show what a partially prepared secondary winding looks like when its windings are being moved into very accurate positions.

You will notice that Bob has wrapped the toroid in tape before starting the secondary winding:

Bob also uses a jar to assist in applying beeswax to the accurately positioned turns of the toroidal transformer:

When the windings are completed, correctly spaced and encased in beeswax, each layer is finished off with a layer of tape. Bob says: "I use a single wrap of PVC electrical tape stretched very tightly over the secondary winding. But be aware, that the tension in the tape has a tendency to make it unwrap. A layer of the yellow 1P802 winding tape secures the electrical tape and holds it firmly in place, bridging the triangular gaps between adjacent turns. Big warning here !!!! **DO NOT USE FIBERGLASS WINDING TAPE !!!!** A big box of 3M winding tape was ordered by accident so I tried it to see if it would work. It not only suppressed the acousto-resonance response of the entire wound toroidal core, but for some strange reason it also caused the electrostatic pulse response of the secondary to **reverse polarity** and reducing the signal amplitude to a mere 10% of what it was !! It totally negated the benefit of the teflon insulation. I had to unwrap it and rewrap it with the yellow 1P802 winding tape. We had to return a whole box of this 3M winding tape and order more of the "right stuff" in bulk from Lodestone Pacific. So be warned, the 3M fibreglass winding tape will totally ruin the behaviour of the toroidal windings". So, to recap, the toroid is wrapped in tape, the secondary wound extending the entire way around the toroid, the windings carefully spaced out so that the gaps around the outer edge of the toroid are exactly equal, the winding encased in beeswax, and then the beeswax covered with a thick layer of tape:

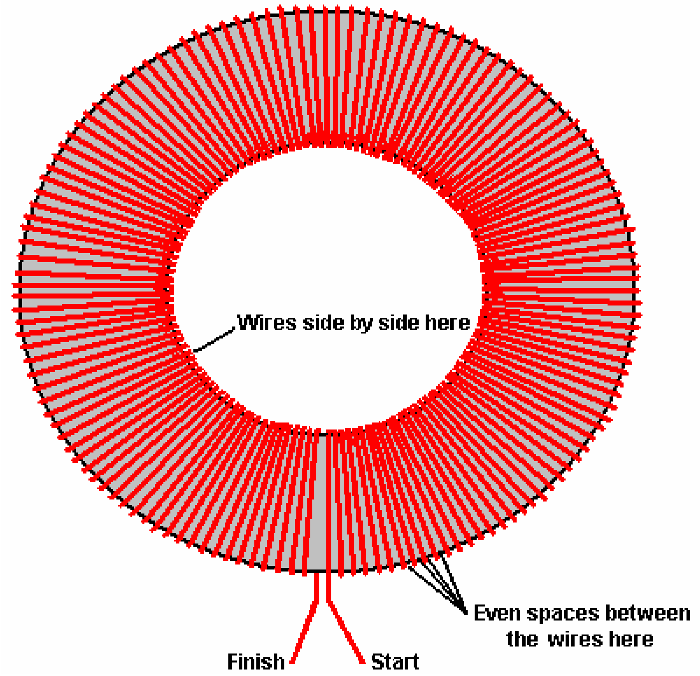

For the great majority of systems, the secondary winding is a tightly wound, single layer, full-fill wrap of 16 gauge, single-core, silver-plated, teflon-insulated copper wire. There will be about 133 turns in this winding, though it can vary from 127 to 147 turns due to manufacturing tolerances in the insulation. This will need a wire length of about 100 feet, and the whole of the toroid is covered by this 'secondary' winding. Count the exact number of turns in your actual winding and make a note of it. This secondary winding is held in place with melted beeswax, and when that has hardened, the winding is then wrapped tightly with a good quality tape. This makes a good base for the primary windings which will be wound on top of the tape layer.

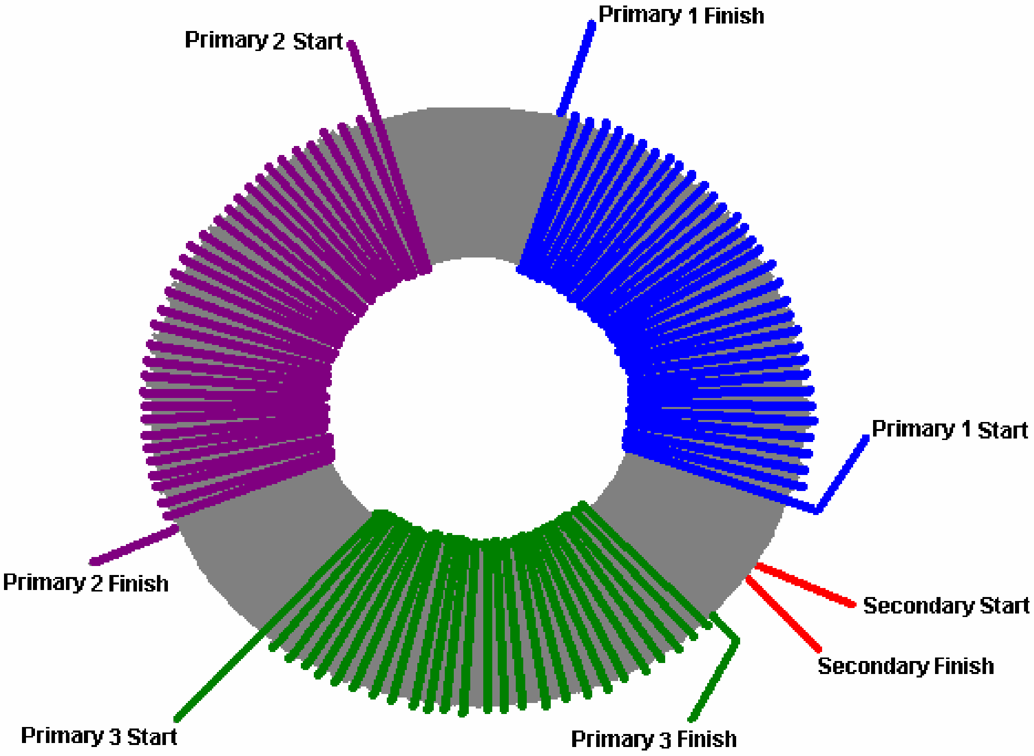

Please note that every winding starts by passing **over** the toroid, proceeds in a counter-clockwise direction, and finishes by passing **under** the toroid. Every winding is created in this way and the quality of workmanship is very important indeed when making these windings. Each winding needs to be tight and positioned exactly with turns touching each other in the centre of the toroid and positioned on the outer edge with exactly equal spaces between each turn. Your construction work **has** to be better than that of a commercial supplier and needs to reach the quality demanded by the military, which would cost thousands of dollars for each toroid if it were to be made up for you by professionals.

The three primaries need to be wound on top of the tape wrapping which covers the secondary winding. These three windings are spaced out equally around the toroid, that is, at 120 degree centres and the leads of the secondary winding exit through the gap between two of the primary windings and **not** in the middle of a secondary winding. The primary windings are held in place with beeswax, and then tightly taped. The primaries may need more than a single layer, and they are wound with the same direction of winds as the secondary, and the same care for even winding spacing as the secondary needed. Tape the entire core well with tightly-stretched PVC electrical tape after winding, to ensure that the primary windings do not move and then add an outer layer of winding tape. Bob uses the 1P802YE type on 3 inch rolls, both the 1 inch and 2 inch widths from: http://www.lodestonepacific.com/distrib/pdfs/tape/1p802.pdf

This is where the generic information ends. The exact details of the primary windings must be determined from the operational characteristics of the cells. This means that you must build, cleanse and condition your cells prior to making the operational measurements. This is done as follows: After full plate cleansing as described earlier, condition the plates until the cell stack reaches at least 150% but ideally 200% or more of Faraday's maximum power efficiency (2.34 Watt-Hours per Litre per Hour). Then, allow the cell stack to cool to room temperature. The cell stack is then powered up with a variable-voltage power supply and the voltage adjusted until the cell current is exactly 2 amps. Write down the voltage needed to give this 2 amp current flow, and do it promptly before the cell starts to warm up again.

The objective here is to have the complex waveform generated by the electronics, produce voltages of about 25% of this measured voltage, so divide your measured voltage by four. The output from the electronics board is about 12.5 volts, so divide again by 12.5 to get the turns-ratio for the toroidal transformer. This is normally in the range of 3.0 to 3.5 and that means that the secondary winding needs to have that times as many turns in it as each primary winding does.

For example, (and **example** only) say your measured voltage happens to be 155 volts. Then the turns ratio would be 155 divided by 4 which is 38.75, and then divide that by 12.5 which gives 3.1 which is the turns ratio. If your secondary winding has, say, 134 turns in it, then the number of turns in each of the three primary windings would be 134 / 3.1 which is 43.23 turns. Round this upwards to give 44 turns.

If the number of turns which you use is off by one turn, then the tuning of the electronics board can compensate for it. If the number of primary turns is off by two turns, then it is possible that you might just be able to compensate for the error by tuning the board, but it is unlikely that you will. If the number of turns is three or more away from the optimum number calculated, then the impedance of the primary windings will be too far out for the board to tune it.

Normally, the diameter of the wire used in the primaries will be greater than that of the secondary because it will be driven by a much lower voltage and so will need a much higher current, but that is not the case here. Now that you have cleansed and conditioned the plates in your electrolyser, power up your inverter with your vehicle engine running at 2000 rpm or so, and measure the DC current taken by the inverter. This is the level of current which the primary windings have to carry, so the wire size can be selected from this measurement. Each primary winding is pulsed, so it is not carrying current all of the time, also, the final primary current is the sum of the three pulsing signals, so a reduction can be allowed for that. While the wire diameter for the primary windings of each toroidal transformer need to be calculated separately, a common diameter turns out to be AWG #20 (21 SWG). The wire length for the primaries will be greater per turn as the turns are now being made over the secondary winding. Forty-eight turns of #20 wire are likely to require at least thirty-five feet and that is for each of the three windings, assuming that all turns can be laid flat side-by-side. If it is necessary to make each a two-layer winding, then the wire length will increase further.

If you would like a 360 degree template for marking the positions of the primary windings, then there is one available at http://www.thegsresources.com/files/degree_wheel.pdf

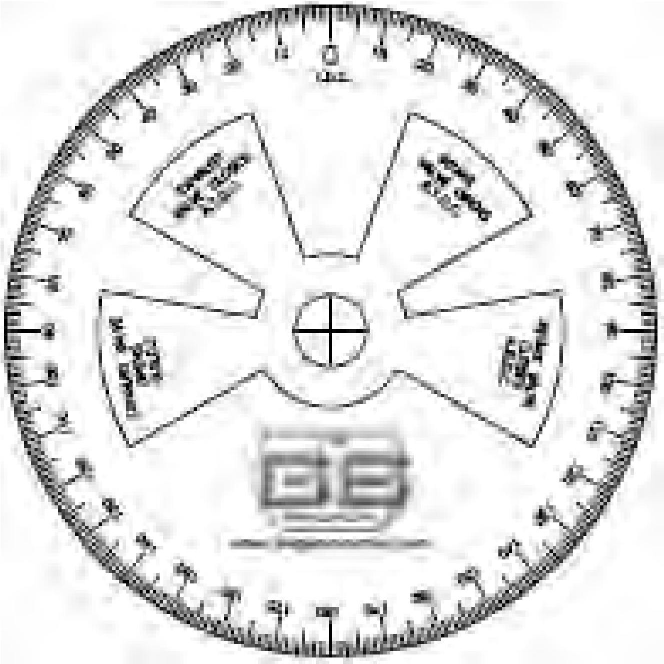

Power Limits:

At the present time, the largest available iron-powder toroid commercially available is the Micrometals 6.5" unit. This sets the upper power limit for a Bob Boyce design electrolyser at 32 square inches of plate area. Bob's present design uses six inch square plates, but the electrolyte level is maintained at just three inches and some area is effectively lost where the plates enter the walls and base of the housing. This 101-plate unit, when built with precision and conditioned and tuned correctly, can generate 50 lpm continuously and short bursts of up to 100 lpm. That is about one litre per minute of HHO gas per cell. This should be sufficient to run an internal combustion engine with a one litre engine capacity, but engines vary so much, that there can be no rule of thumb for the gas production rate needed for a given engine size.

The optimum operating voltage for his 101-plate electrolyser has been established by Bob as being 1.5 volts per cell. However, the power limitation of the 6.5 inch toroid does not prevent the voltage being raised. So, if we opt for using a 220 volt inverter rather than the 110 volt one already described, then the number of cells can be doubled. This extends the case from about twenty inches in length to around forty inches. This might be suitable for use with vehicles up to two litre engine capacity and the unit can be located on the flatbed of a truck or the boot (trunk) of a car or beside a generator if it is being used to power an electrical generator. Electrical generator engines are usually incredibly inefficient with an overall efficiency of as little as 10% when the generator is considered. Consequently, running a generator on HHO gas alone is by no means as easy as it looks on the surface. If an electrolyser is installed in a vehicle, it is **very** important that no pipe carrying HHO gas is routed through any passenger area and a bubbler positioned close to the engine. The number one priority must always be safety.

Increased gas output can be got by increasing the width of the plates while maintaining the plate area covered by the electrolyte. One possibility is to make the plates nine inches wide and keeping the electrolyte at a four-inch depth, giving thirty-six square inches of plate area. The plate size would then be 9" x 6" or any other height up to 9" x 9".

The reason why a Boyce electrolyser can give 1,200% of the maximum possible gas output determined by Michael Faraday, is that this unit pulls in large amounts of additional power from the environment. So, the vehicle electrics is used primarily to power the pulsed toroidal circuitry which taps this energy, and the conversion of water to HHO gas is performed primarily by energy drawn from the environment.

Plate surface preparation is very important and is described in detail. However, the way that the plates operate when used for straight DC electrolysis is quite different from the way that they operate when being used in high-efficiency pulsed-mode:

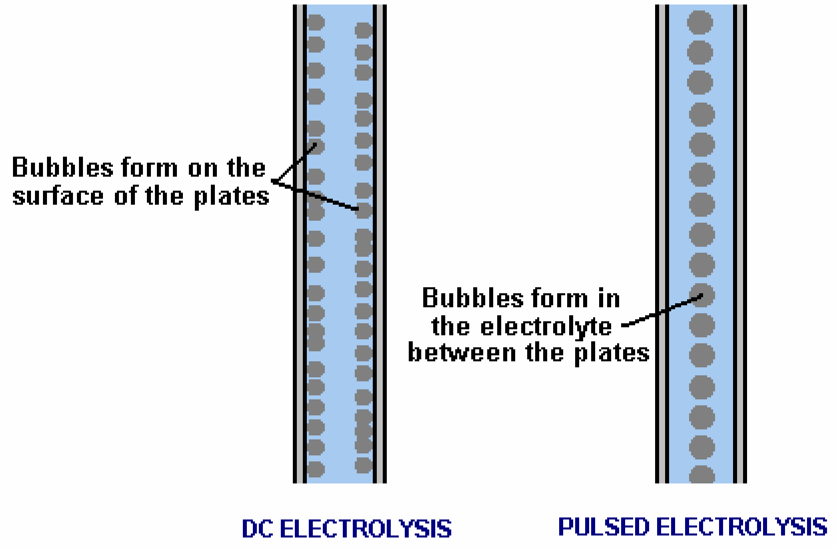

With straight DC-electrolysis, the bubbles of HHO gas form on the face of the plates and break away, helped by the thousands of microscopic, sharp-peaked mountains created on the face of every plate by the two-direction scoring with sandpaper. With the pulsed technique, the HHO bubbles form in the electrolyte itself, between the plates and give the visual impression of the electrolyte boiling.

It should be realised that with the large gas volumes produced with the 101-plate and 201-plate electrolysers, that a considerable pipe diameter is needed to carry the gas, and even more importantly, the two bubblers used need to be a considerable size. It is important that the bubbles streaming up through the water in the bubbler do not form a continuous column of HHO gas as that could carry a flame straight through the bubbler and defeat the protection which it normally provides. A good technique to combat this and improve the scrubbing of electrolyte fumes out of the gas, is to put a large number of small holes in the sides of the pipe carrying the gas down into the water in the bubbler. This creates a large number of smaller bubbles and is much more effective.

Connecting the Electrics:

Bob has specified that the primary windings are connected between the board outputs and the positive supply for the board like this:

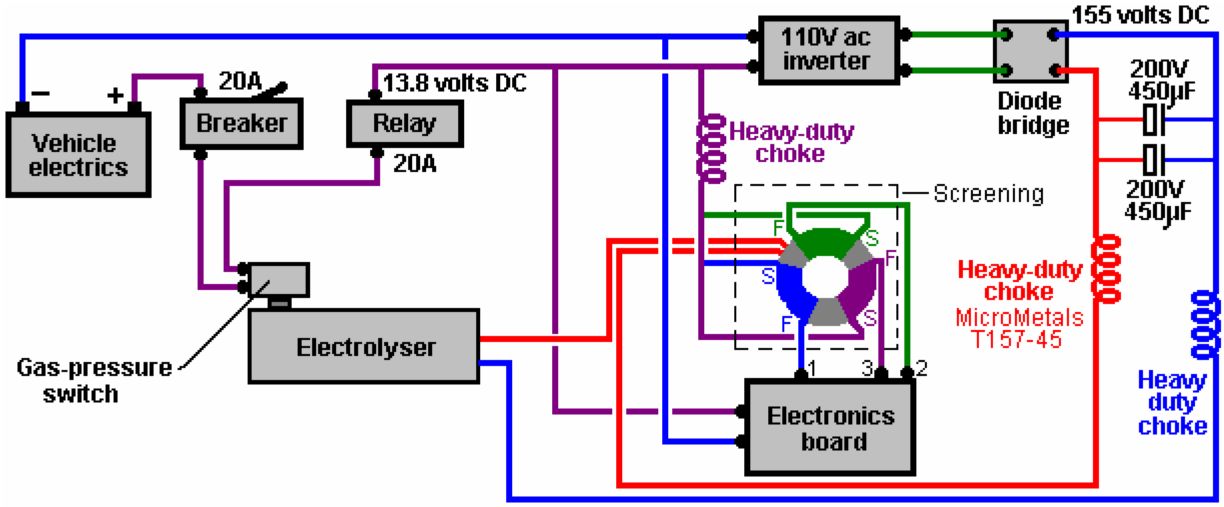

It is important to include heavy-duty chokes (coils) in both sides of the high voltage power supply and in the 13.8 volt positive lead coming from the vehicle electrics. The recommended choke cores are the MicroMetals T157-45 and these are wound with 15 turns of AWG #16 (SWG 18) enamelled copper wire, through it is perfectly ok to wind these chokes on laminated iron pieces taken from an old mains power transformer frame. The fifteen turns of wire produce a choke of 29.5 microhenrys.

If all is well and the 20-amp contact-breaker (or fuse) is not tripped, the electrical power passes through to the gas-pressure switch mounted on the electrolyser. If the gas production rate is greater than the engine requirement and as a result, the gas pressure inside the electrolyser gets above 5 psi. then the gas pressure switch disconnects the electrical supply which in turn, cuts off the generation of more gas until the pressure inside the electrolyser drops again as the engine uses the gas. If all is well, the gas-pressure switch will be closed and the electrical power is then passed to the relay's switch contacts. The relay is wired in such a way that the relay will be powered up if, and only if, the engine is running. If all is well and the relay contacts are closed, then the power is passed through to both the inverter and the electronics board. The inverter output is 110 volts AC so it is passed through a diode bridge which converts it to pulsing DC with a peak value of about 155 volts. This voltage and the output of the electronics board toroidal transformer are passed to the electrolyser to break down the water and generate HHO gas. The wire connecting the vehicle negative to the electronics board should be very heavy duty as it is carrying a large current.

There is a lot of power stored in a charged battery. It is important therefore, to protect against short-circuits in any new wiring being added to a vehicle, if this electrolyser is to be used with a vehicle. The best overall protection is to have a circuit-breaker or fuse connected in the new wiring immediately after the battery. If any unexpected load occurs anywhere in the new circuitry, then the circuit will be disconnected immediately.

It is also important that the electrolyser is only connected and operating when the engine is running. While the gas-pressure switch should accomplish this, it is no harm to have additional protection in the form of a standard automotive relay in the power supply line as shown in the diagram above. This relay coil can be connected across the electric fuel pump, or alternatively wired so that it is powered up by the ignition switch being turned on.

Positioning the Electronics

The descriptions and diagrams have been presented with the objective of helping you understand in broad outline, what Bob Boyce's electrolyser is and very roughly speaking, how it operates. There are practical details which you should discuss in the WorkingWatercar forum as there experienced people there who will help builders get the details right.

It should be realised that the strong, rapidly pulsing currents generated by the electronics, cause very powerful magnetic fields. These magnetic fields can disrupt the operation of the circuitry. These fields flow around inside the toroid core and this creates an area of very reduced magnetic activity in the space in the centre of the toroid. For that reason, it would be ideal if the circuit board were placed in that area with the toroid surrounding it. However, the electronics board size does not allow this at the present time, so instead, Bob places the toroid inside a custom, circular housing, something like a biscuit tin made of aluminium which operates as a "Faraday Cage" to protect against the magnetic fields produced:

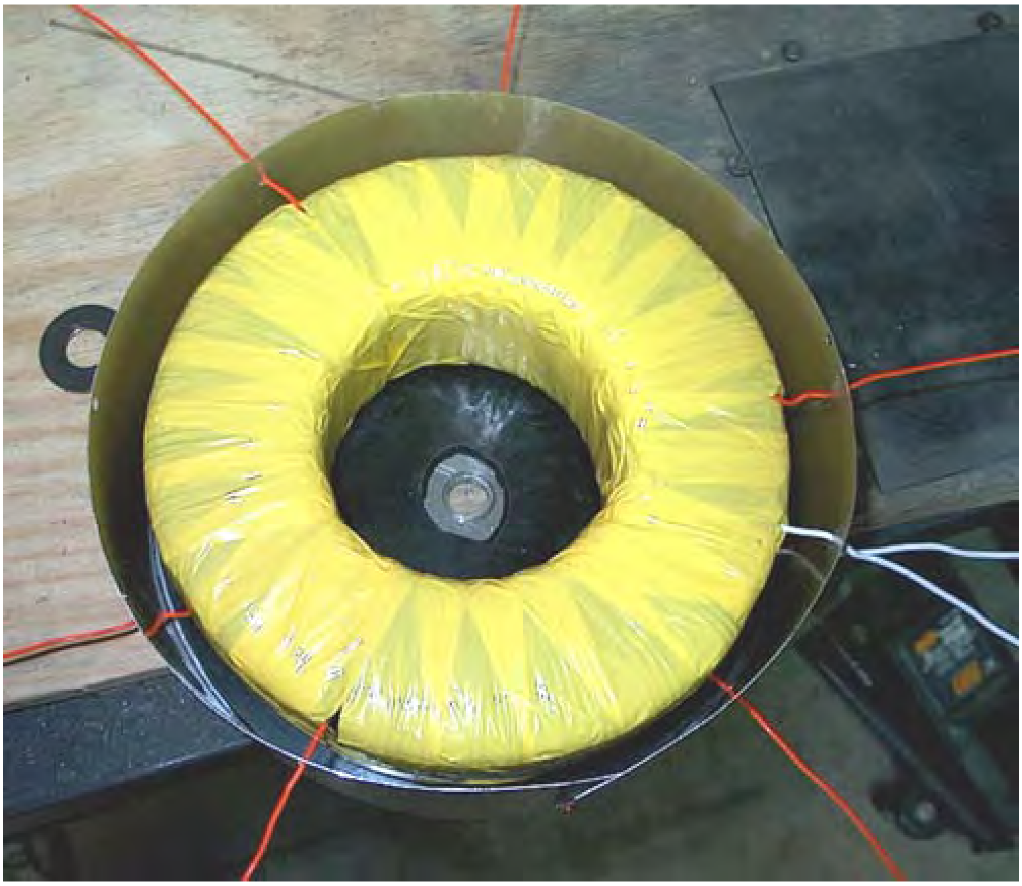

Supplying the Water

The potassium hydroxide is not used up when the electrolyser is operated. A small amount leaves the electrolyser in the form of vapour but this is washed out of the gas in the first bubbler. Two bubblers are used, the first is located beside the electrolyser and connected to it via a one-way valve. The second bubbler is located close to the engine. From time to time, the water in the bubblers is poured back into the electrolyser and that prevents the loss of any potassium hydroxide. Not only does this conserve the potassium hydroxide, but it also protects the engine as potassium hydroxide has a very bad effect inside the engine itself.

The overall water system is like this in broad outline, omitting the electrical safety devices:

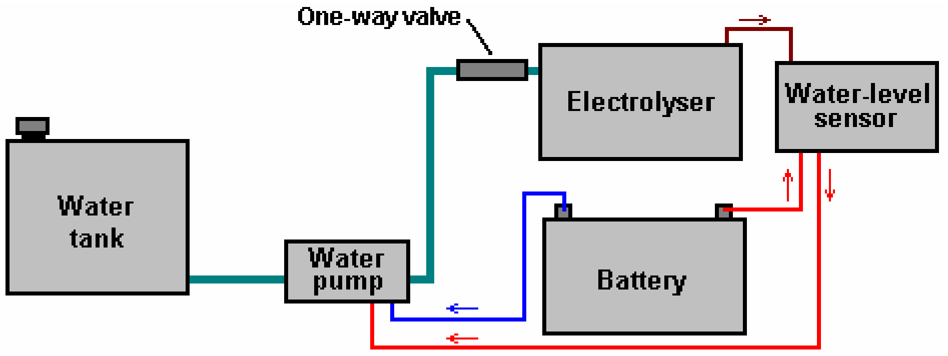

A probe inside the electrolyser senses when the average level of the electrolyte has dropped and powers up the water pump to inject more water into the electrolyser. The rate of gas production is so high with the pulsed system that the electrolyte level is place at about half the plate height. That is some three inches below the tops of the plates. Because of this violent action, the water-level sensor needs to be operated from the electrolyte outside the plates where the surface of the electrolyte does not move so violently.

A serious issue with an electrolyser of this type is dealing with water loss. As the plates have to be spaced closely together and the since the electrolyte between the cells is effectively isolated from the electrolyte in the other cells, driving a mile down the road is liable to lower the water level by half an inch (say, one centimetre). It is essential to keep replacing the water which is used.

Two things have to be dealt with:

1. Sensing when the electrolyte level has fallen, and
2. Creating some device for getting extra water into each cell

Simple electronics provides the answer to sensing the level of the electrolyte, and a windscreen-washer water pump can be used to inject the additional water.

A sensor for the water in the cells can be on just one cell. If the water level of any one cell falls below the level in the other cells, then the gas produced in that cell will be slightly less than the other cells, so it will lose less water until the water levels match again. Also, Bob recommends cutting the slots which hold the plates, 3 thousandths of an inch (0.003 inch or 0.075 mm) larger than the actual thickness of the metal plates. This effectively blocks electrical leakage between adjacent cells but does allow a very gradual migration of water between the cells to help maintain an even water surface across the cell.

The water-level sensor can be just one stiff stainless steel wire run down each side of any cell. These wires should be insulated to make sure that They do not short-circuit to either (or both) of the plates on each side of them. They should be set so that their tips are at the intended surface level of the electrolyte.

If the electrolyte level drops below the tip of the wire sensors, then the resistance between the wires will fall, indicating that more water is needed. This can switch the water pump on, which will raise the water level until the electrolyte level reaches the tip of the wire again. A possible circuit for doing this is shown here:

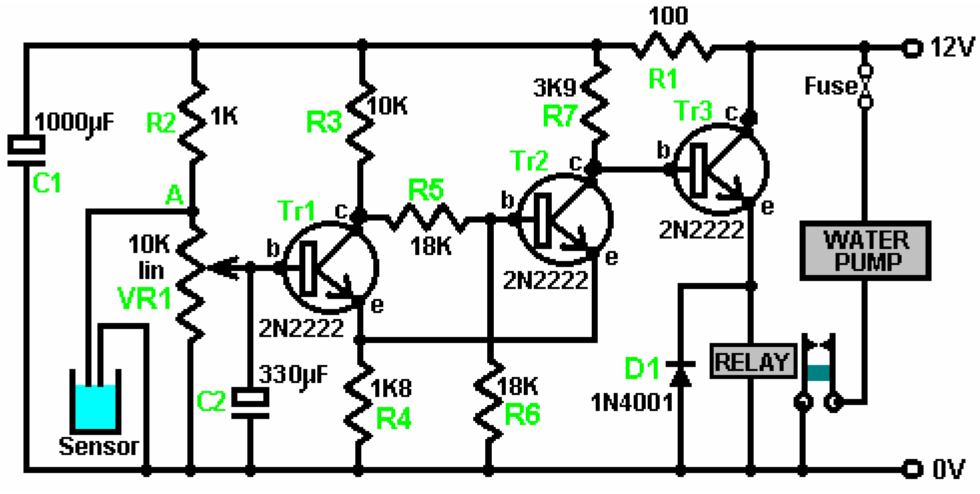

When the level of the electrolyte falls, the sensor wires come clear of the liquid and the voltage at point ‘A’ rises. Provided that this situation remains for a second or two, capacitor C2 charges up and the voltage on the base of transistor Tr1 rises, causing it to switch on. Transistors Tr1 and Tr2 are wired as a Schmitt trigger, so transistor Tr2 changes state rapidly, raising the voltage at its collector, and causing transistor Tr3 to power the relay on. The relay contacts switch the water pump on, which raises the level of the electrolyte until it reaches the sensor wires again. This flips the circuit back into its standby state, powering down the water pump. Resistor R1 feeds capacitor C1 to reduce the effects of variations of voltage reaching the sensor circuit. The components shown here are not critical and there must be at least twenty alternative designs for this circuit.

A possible physical layout for this circuit is shown here:

The build is based on using the standard 10-strip, 39-hole strip-board. For convenience in drawing, the holes are represented as the points where the lines cross in the diagram shown here:

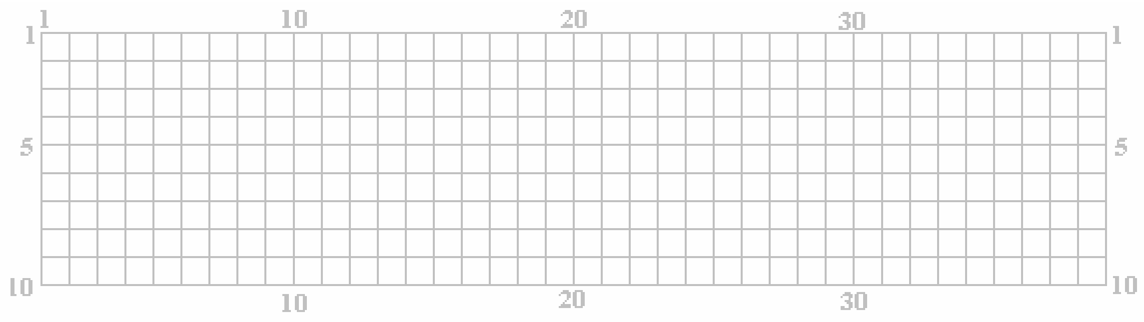

The horizontal lines represent the copper strips and the intersections with the vertical lines represents the matrix of holes. Many different layouts could be used for this circuit, so the following diagram is only a suggestion:

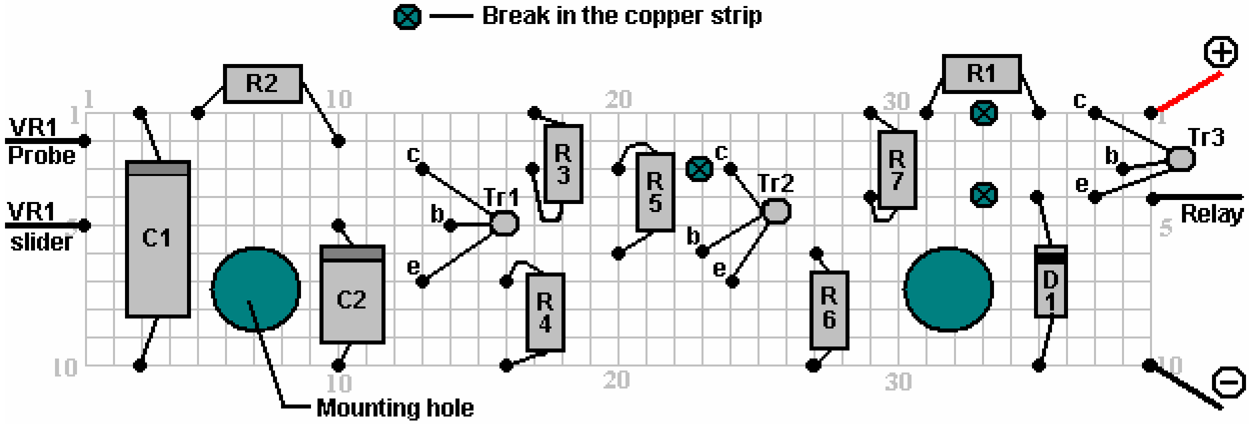

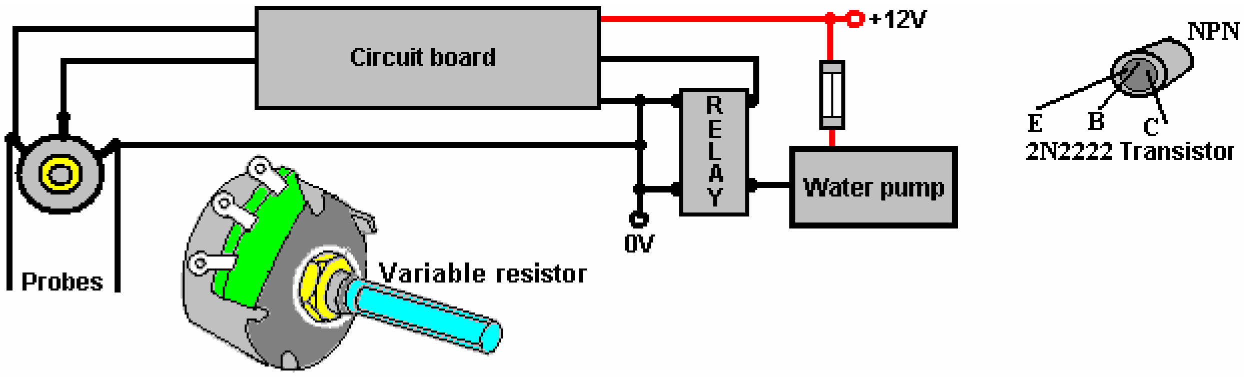

Components:

R1 100 ohms
R2 1,000 ohms
R3 10,000 ohms
R4 1,800 ohms
R5 18,000 ohms
R6 18,000 ohms
R7 3,900 ohms

C1 1000 microfarad 35 volt or higher
C2 330 microfarad 16 volt or higher

D1 1N4001 or similar 100 volt or higher 1 amp

Tr1 to Tr3 2N2222 or 2N2222A or similar
40V, 800 mA, 500 mW, gain 100 - 300

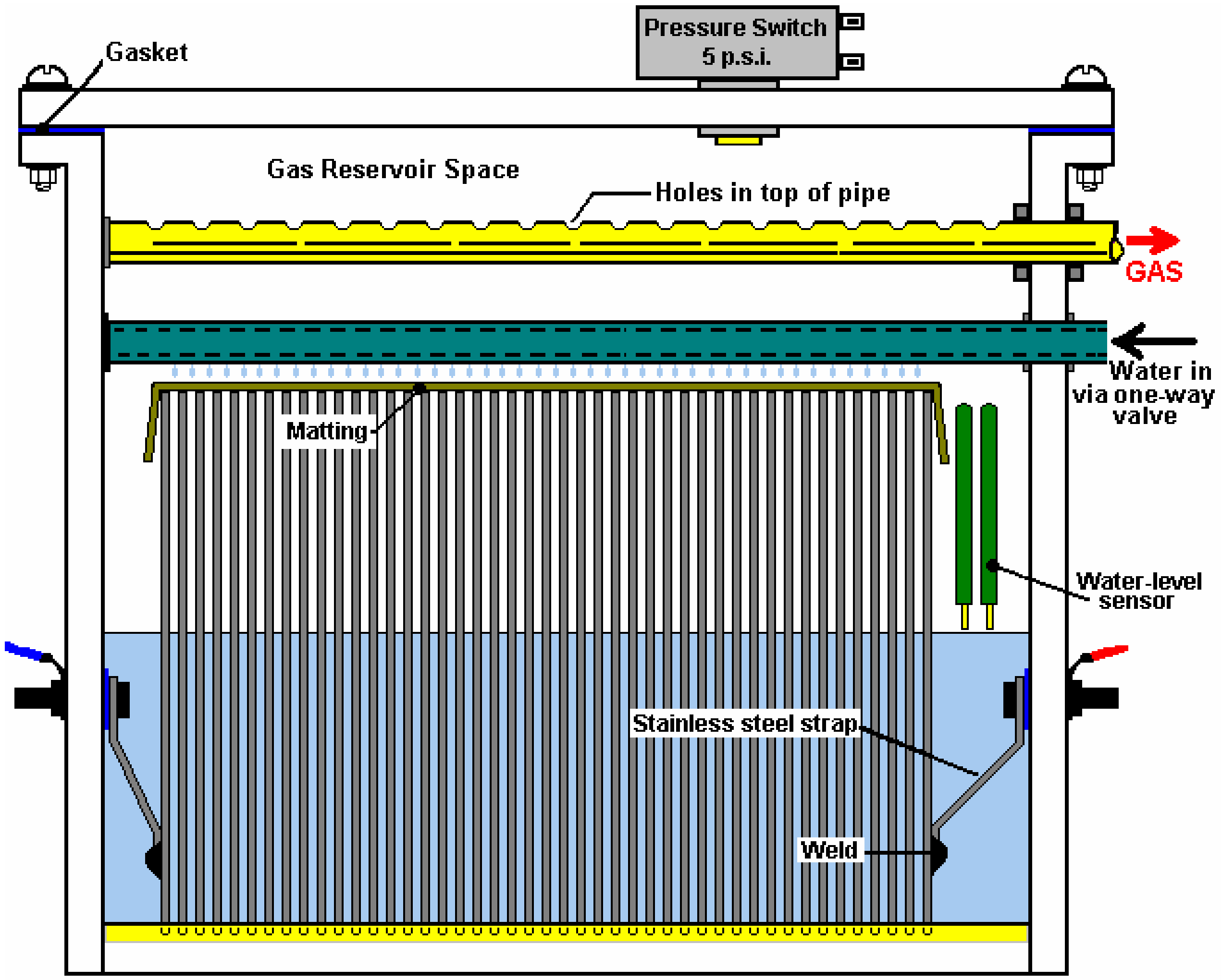

Side View

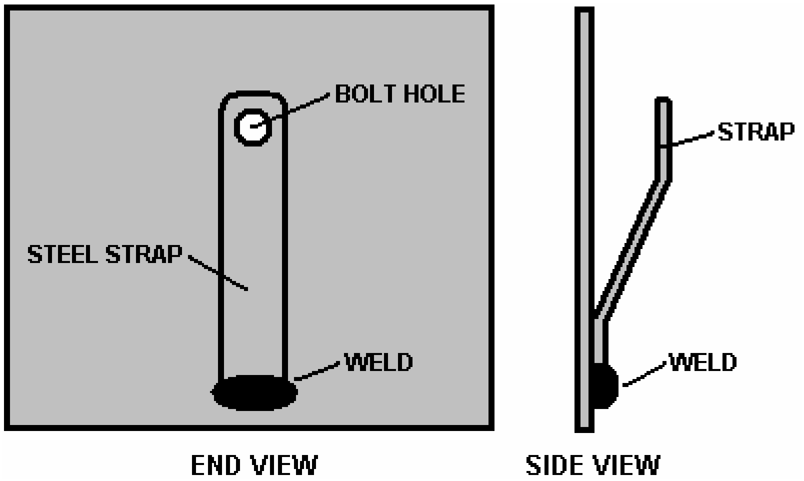

To combat splashing of the electrolyte, a layer of aquarium matting is placed over the tops of the plates. In the diagram above, only a few of the 101 plates are shown, in order to keep the drawing narrow enough to fit on the page. The plates at each end have a stainless steel strap welded to them in order to allow for simple and robust electrical connections to be made through the case.

The water supply is arranged to feed equal amounts of water to each cell. The design for this supply pipe has recently been improved by Ed Holdgate and Tom Thayer and Ed now supplies one along with the precision housings which he makes for Bob's design. The new design has a water-supply pipe with very accurately cut slots in it. The lengths of the slots are directly related to how far along the pipe they are positioned. The objective is to have the same amount of water coming out of each slot even though the water pressure drops the further along the pipe the slot is located.

That water supply pipe is then housed in an outer pipe which has a hole drilled in it exactly above each of the bodies of electrolyte trapped between the plates (a 3/16" spacing):

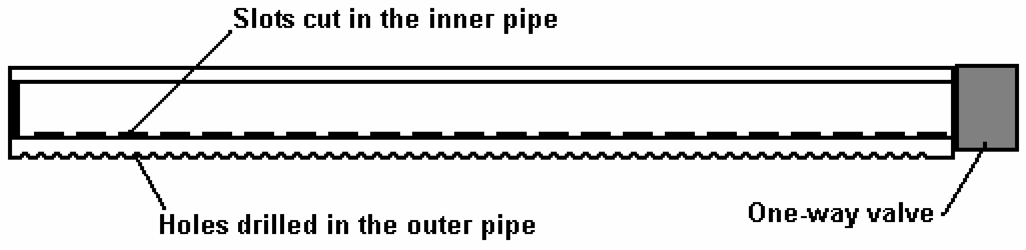

WATER SUPPLY PIPE

This water supply pipe arrangement works well in practice and it looks surprisingly like the gas take-off pipe which has a series of holes drilled along the top of it:

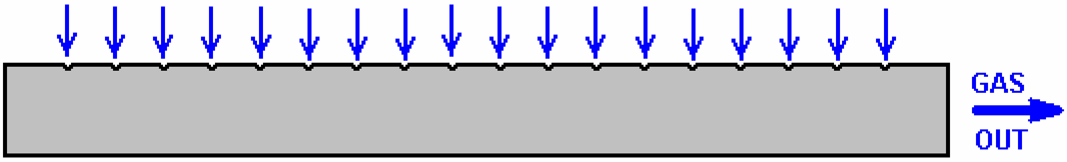

GAS OUTLET PIPE

This arrangement works well as it allows large volume gas flow out of the cell and yet makes it difficult for any splashes of electrolyte to make it into the pipe.

Connecting to the Engine:

The Bob Boyce HHO gas system produces such a very high gas output that one inch (25 mm) pipes are needed to carry the gas from the electrolyser to the engine. Because of the speed of the pressure wave caused if HHO gas ignites, no pop-off or shatter-disc system has sufficient time to operate. In addition, Bob's system produces the top grade of HHO gas and as that has the highest energy level possible, it explodes spontaneously at a pressure of just 15 psi. To deal with this situation, and the very high rate of gas flow which has to be handled, two very robust bubblers and one particle filter need to be used on the output of the electrolyser as shown here:

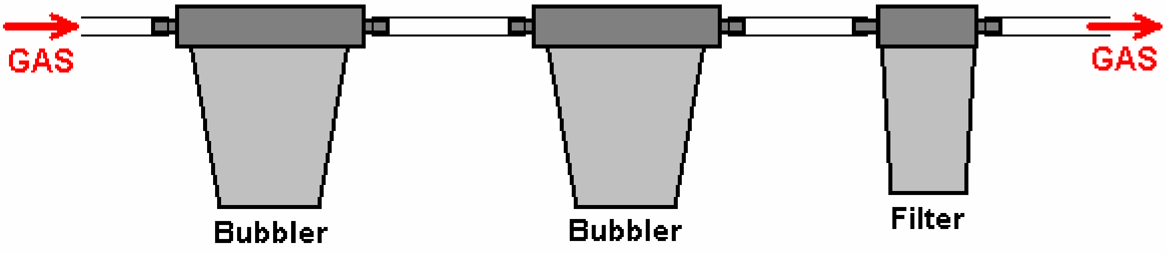

For those people living in America, Bob recommends the use of this bubbler:

This is a bubbler constructed from "Whole Household Prefiltration" units supplied by Home Depot, which unfortunately, may cost more than US $100 each.

These units come with a domed cap which needs to be drilled out with a large number of 1/16" holes like this:

An important point with this unit is that the flow through the bubbler is in the opposite direction to the arrows moulded on the outside of the unit:

Also, the pressure at which it operates needs to be dropped from normal household water pressure to the 0.5 psi. gas pressure needed for use as a bubbler. This is achieved by replacing the ball valve inside the unit with a much weaker version available from the KBI company, reference code KC1000 and costing about US $10. If you get one, be sure to specify a 0.5 psi pressure version as they have more than one type.

It is important that the end cap be a domed variety as shown above. This is necessary as it prevents bubbles joining together before streaming upwards through the water.

The particle filter housing is a French-made unit sold by Home Depot under the name of "SmartWater" and reference number GXWH04F and it costs under US $20. As the filter supplied with the unit is not fine enough, so a 1-micron filter needs to be bought from Ace Hardware to replace the standard 4-micron filter supplied with the filter housing. This 1-micron adapted filter also acts as a back-flash preventer:

Practical Issues

No matter which variety of electrolyser cell is used, it is essential to put a bubbler between it and the engine intake. This is to prevent any accidental ignition of the gas reaching the electrolysis cell. Also, no electrolyser should be operated or tested indoors. This is because the gas is lighter than air so any leak of gas will cause the gas to collect on the ceiling where it can cause a major explosion when triggered by the slightest spark (such as is generated when a light switch is turned on or off). Hydrogen gas escapes very easily indeed as its atoms are very, very small and can get through any tiny crack and even directly through many apparently solid materials. Testing electrolysers should be done outdoors or at the very least, in very well-ventilated locations. Using at least one bubbler is an absolutely vital safety measure. A typical bubbler looks like this:

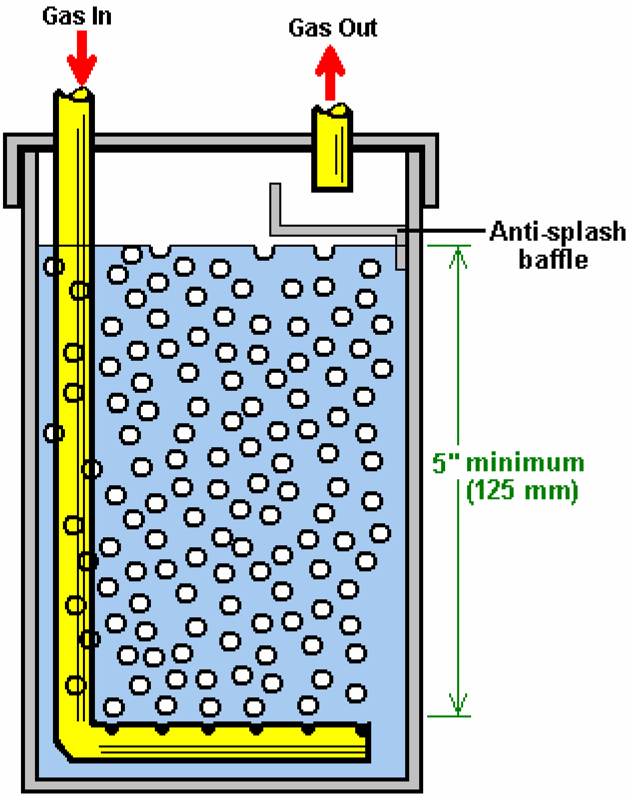

Bubbler construction is very simple indeed. It can be any size or shape provided that the outlet of the entry tube has at least five inches (125 mm) of water above it. Plastic is a common choice for the material and fittings are easy to find. It is very important that good sealed joints are made where all pipes and wires enter any container which has HHO gas in it. This, of course, includes the bubbler. Bob Boyce's 101-plate units produce up to 100 lpm of gas, so these need large diameter gas piping to carry that substantial volume and the bubblers need to be big as well. It is also a good idea to drill additional holes in the entry pipe from half way down below the surface of the water, in order to create a larger number of smaller bubbles

The anti-slosh filling or a baffle plate in the cap is to prevent the water in the bubbler from splashing up into the exit pipe and being drawn into the engine. Various materials have been used for the filling including stainless steel wool and plastic pot scourers. The material needs to prevent, or at least minimise, any water passing through it, while at the same time allowing the gas to flow freely through it.

Let me stress again, that this document does NOT recommend that you actually build any of the items of equipment discussed here. The 'HHO' gas produced by electrolysis of water is extremely dangerous, explodes instantly and cannot be stored safely, so this document is strictly for information purposes only.

However, to understand the process more fully, the following details would need to be considered carefully if somebody decided to actually build one of these high-voltage series-cell devices.

There is a considerable difference between a mixture of hydrogen and oxygen gases ('HHO') and petroleum (gasoline) vapour. While they both can serve as fuel for an internal combustion engine, they have considerable differences. One major difference is that HHO gas burns very much faster than petrol vapour. That would not be a problem if the engine was originally designed to burn HHO gas. However, most existing engines are arranged to operate on fossil fuels.

If using HHO gas to improve the burn quality and improve the mpg of a vehicle, no timing adjustments are normally necessary. However, all recent cars in the USA are fitted with an Electronic Mixture Controller and if nothing is done about that, a decrease in mpg may actually occur as the Controller may start pumping more fuel into the engine when it sees a change in the quality of the exhaust. Good information on how to deal with this problem can be found at the web site http://better-mileage.com/memberadx.html which includes details of how to deal with the Controller or in the previous document in this Appendix.

If an engine is run without any fossil fuel at all, then timing adjustments need to be made. Hydrocarbon fuels have large molecules which do not burn fast enough to be efficient inside the cylinder of an engine. What happens is that for the first fraction of a second after the spark plug fires, the molecules inside the cylinder split up into much smaller particles, and then these smaller particles burn so fast that it can be described as an explosion:

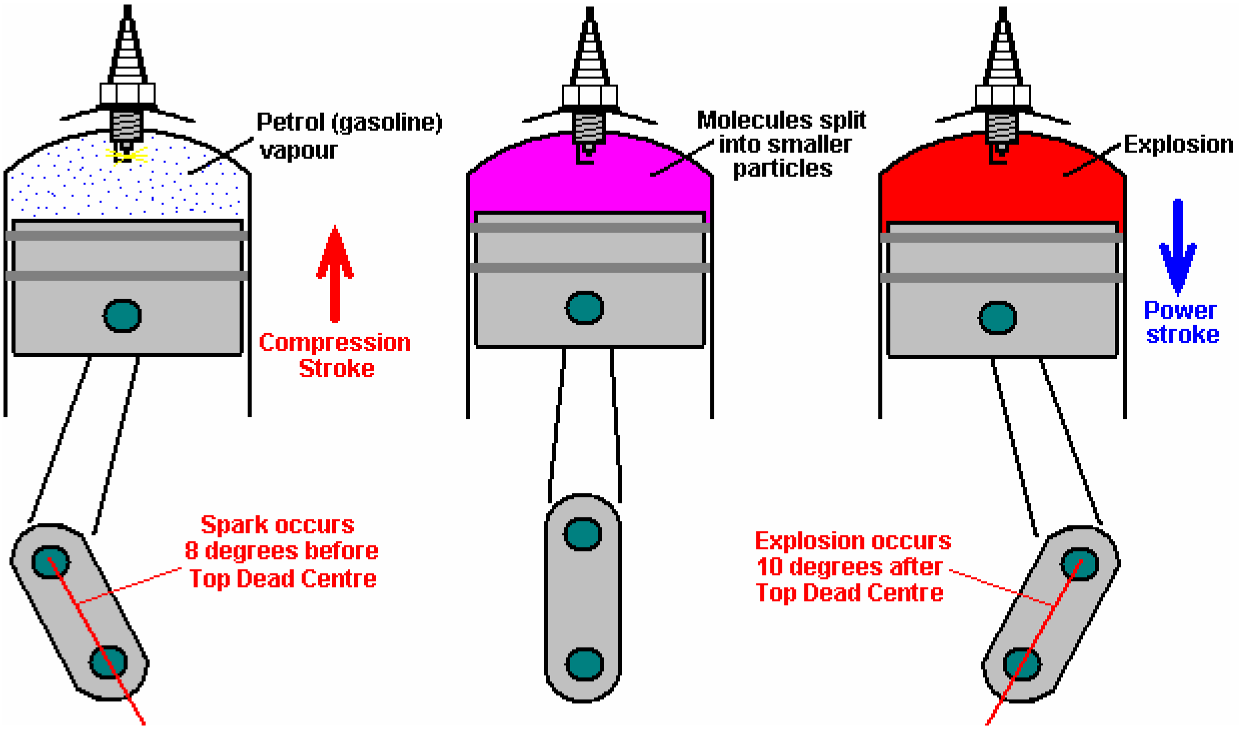

Because of the delay needed for the conversion of the hydrocarbon molecules to smaller particles, the spark is arranged to occur before the Top Dead Centre point. While the molecules are splitting up, the piston passes its highest point and the crankshaft is some degrees **past** Top Dead Centre before the driving pressure is placed on the head of the piston. This driving force then reinforces the clockwise rotation of the crankshaft shown in the diagram above and the motor runs smoothly.

That will **not** happen if a HHO gas/air mix is substituted for the petrol vapour. HHO gas has very small molecule sizes which do not need any kind of breaking down and which burn instantly with explosive force. The result is as shown here:

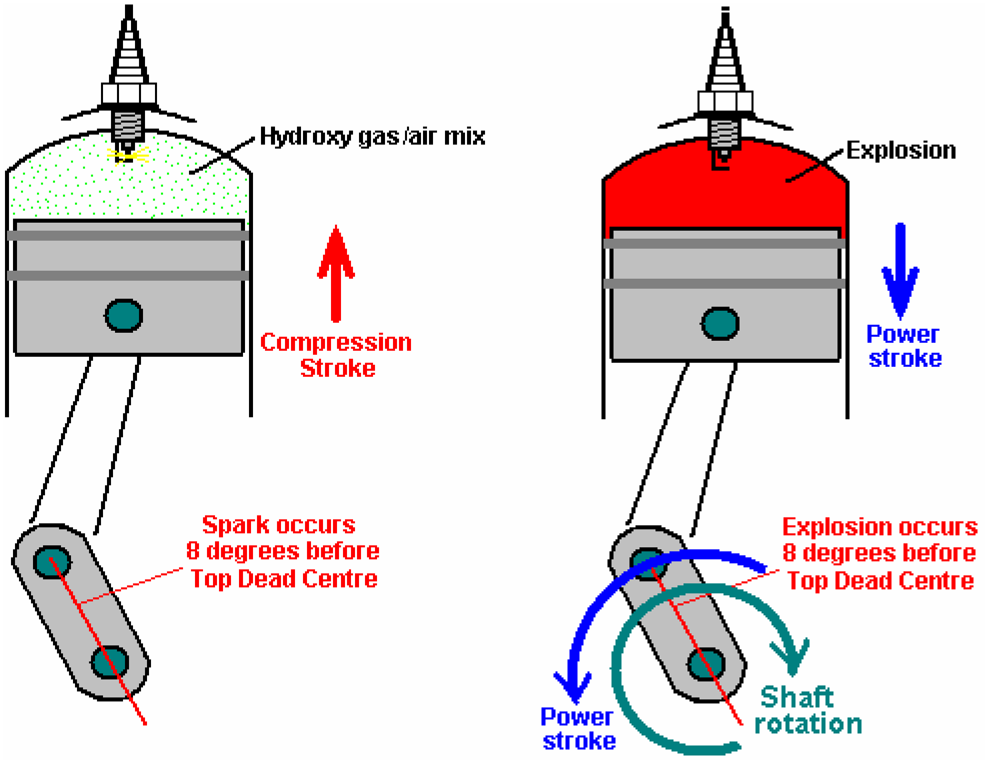

Here, the explosion is almost instantaneous and the explosion attempts to force the piston **downwards**. Unfortunately, the crankshaft is trying to drive the piston **upwards** past the Top Dead Centre ('TDC') point, so the explosion will not help the engine run. Instead, the explosion will stop the crankshaft rotating, overload the crankshaft and connecting rod and produce excessive pressure on the wall of the cylinder.

We do **not** want that to happen. The solution is to delay the spark until the piston has reached the position in its rotation where we want the explosion to take place - that is, in exactly the same place as it did when using petrol as a fuel.

In the example above, the spark would be retarded (delayed) from 8 degrees before TDC to 10 degrees after TDC, or 18 degrees overall. The spark is '**retarded'** because it needs to occur **later** in the rotation of the crankshaft. The amount of retardation may vary from engine to engine, but with HHO gas, the spark must never occur before TDC and it is preferable that the crankshaft has rotated some degrees past TDC so that most of the push from the piston goes to turn the crankshaft and as little as possible in compressing the crankshaft.

Diesel Engines

Diesel engines do not have spark plugs and so there is no timing alterations needed with them. Any booster volume of HHO gas up to 80% of the cylinder contents can be added into the air entering a diesel engine and it automatically helps the mpg performance. If a really large volume of HHO gas is available, then the diesel engine is set to tick over on diesel and HHO gas is then added to rev the engine up and provide the power. The amount of HHO gas should not exceed four times the amount of diesel as engine overheating will occur if it does.

Roy McAlister has been running internal combustion engines on hydrogen and many mixtures of hydrogen and other fuels for forty years now. He advises anybody interested in implementing a system like this, to start with a single-cylinder engine of five horsepower or less. That way, the techniques are easily learnt and experience is gained in tuning a simple engine running on the new fuel. So, let us assume that we are going to convert a small generator engine. How do we go about it?

First, we obtain our supply of the new fuel. In this case, let us assume that we will produce HHO gas using a multi-cell high-voltage series electrolyser as described earlier. This unit has an electrical cut-off operated by a pressure switch which operates at say, five pounds per square inch. Assuming that the electrolyser is capable of producing a sufficient volume of gas, this is roughly equivalent to a hydrogen bottle with its pressure regulators.

In broad outline, the gas supply would look like this:

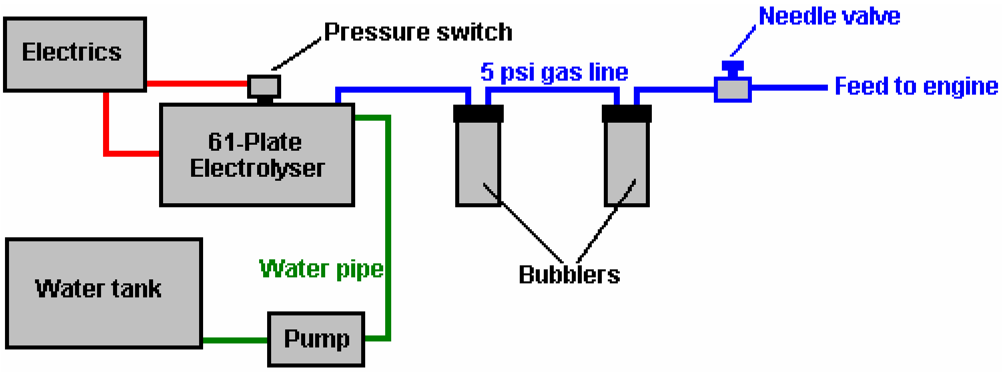

The physical connection to the engine is via a 6 mm (1/4 inch) stainless steel pipe, fitted with a standard knob-operated needle valve. The carburettor is removed altogether to allow maximum airflow into the engine, (or failing this, the throttle valve of the carburettor is opened wide and secured in that position). The stainless steel gas pipe has its diameter reduced further by the use of a nozzle with an internal diameter of 1 mm or so (1/16 inch or less), about the size of a hypodermic needle used by a vet. HHO gas has very small molecules and will flow very freely through tiny openings. The nozzle tip is pushed close to the intake valve and the gas feed pipe is secured in place to ensure no movement:

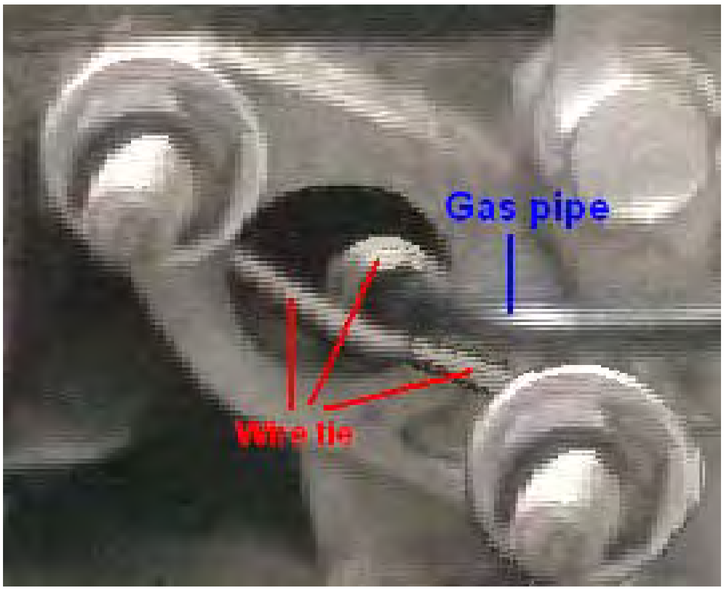

When the engine is about to be started, the needle valve can be hand-adjusted to give a suitable level of gas flow to maintain tick-over, but before that can happen, the timing of the spark needs to be adjusted

There are two main ways to adjust the timing. The first is mechanical, where an adjustment is made to the mechanism which triggers the spark. Some small engines may well not have a convenient way to adjust the timing by as much as is needed for this application. The second way is to delay the spark by an adjustable electronic circuit (for instance, an NE555 monostable driving a FET). This can either be built or bought ready made. One supplier which offers a dashboard-mounted manually controlled ready-built ignition delay unit is http://www.msdignition.com/1timingcontrols.htm and there are others.

Waste spark.

As already discussed in chapter 10, there is one other very important consideration with small engines and that is the way in which the spark is generated. With a four-stroke engine, the crankshaft rotates twice for every power stroke. The spark plug only needs to fire every second time the piston approaches its highest position in the cylinder. This is not particularly convenient for engine manufacturers, so some simplify matters by generating a spark on every revolution. The extra spark is not needed, contributes nothing to the operation of the engine and so is called the “waste spark”. The waste spark does not matter for an engine running on fossil fuel vapour, but it **does** matter very much if the fuel is switched to HHO gas.

As has been shown in the earlier diagrams, it is necessary to retard (delay) the spark by some eighteen degrees or so when using HHO gas, due to its very much faster ignition rate. Delaying the HHO fuel ignition point until after Top Dead Centre sorts out the situation in an entirely satisfactory manner for the Power Stroke of the engine. However, if the engine generates a spurious 'waste spark' that waste spark does cause a serious problem.

In the case of the fossil fuel, any waste spark will occur towards the end of the Exhaust Stroke and it will have no real effect (apart from wasting electrical power). In the case of the HHO fuel, the engine has completed the Exhaust Stroke, the outlet valve has closed, the intake valve has opened and the gas is being drawn through the open inlet valve into the cylinder in the Intake Stroke. At that instant, there is an open passage from the spark plug, through the cylinder, through the open intake valve, to the gas supply pipe and through it to the bubbler between the electrolyser and the engine. If a waste spark takes place, it **will** ignite the gas:

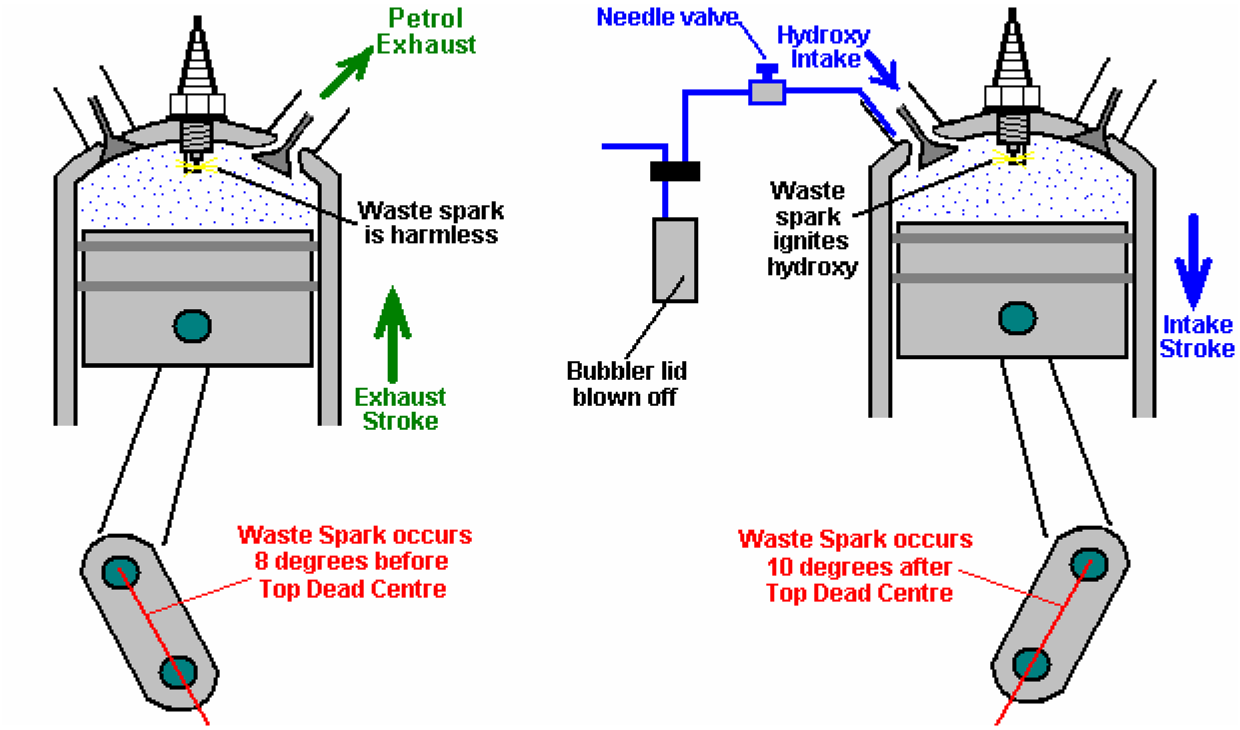

The gas ignition is highly likely if there is a waste spark in an engine using HHO fuel and (the necessary) retarded ignition. Trying to eliminate the unwanted spark by using a 'divide-by-two' electronic counter circuit is not likely to be successful unless there is some mechanically certain way of triggering the counter circuit at start-up. The best way of overcoming a waste spark, if the engine has one, is to use a 2:1 gearing arrangement on the output shaft of the motor and using the slower shaft to trigger the spark. Multi-cylinder engines do not usually have a waste spark. It is also possible to operate a contact from either the camshaft or directly from one of the valve stems. It has also been suggested that using a pressure-operated switch on the exhaust system would be effective, and another suggestion is to delay the opening time of the intake valve until after waste spark has occurred, though this may create a good deal more engine noise.

Once some experience has been gained in operating a single cylinder engine on HHO gas, the move to a full-sized engine is not very difficult. Each cylinder of the large engine is pretty much the same as the small engine. Instead of running a small tube down the carburettor intake of each cylinder, it is more convenient and economic to use the existing intake manifold, leave the throttle wide open and run the HHO gas pipe into the manifold. A flexible stainless steel pipe section should be used to absorb the vibration of the engine relative to the electrolyser. Roy McAlister suggests using a knob-operated needle valve to set the idling speed to about 1,000 rpm and placing a throttle-operated lever valve in parallel with it for applying more power to the engine:

It is not immediately clear to me why this arrangement is recommended as the knob-operated needle valve use to set the idling rate appears to be redundant. There appears to be no particular reason why a screw adjustment could not be used on the lever valve linked to the accelerator pedal of the vehicle. If that were done, then the throttle screw could be used to set the idle rate and the screw locked in position. That way, the needle valve and two Y-connectors could be dispensed with. The only possible reason which suggests itself is that there is slightly less physical construction needed for the recommended way shown here:

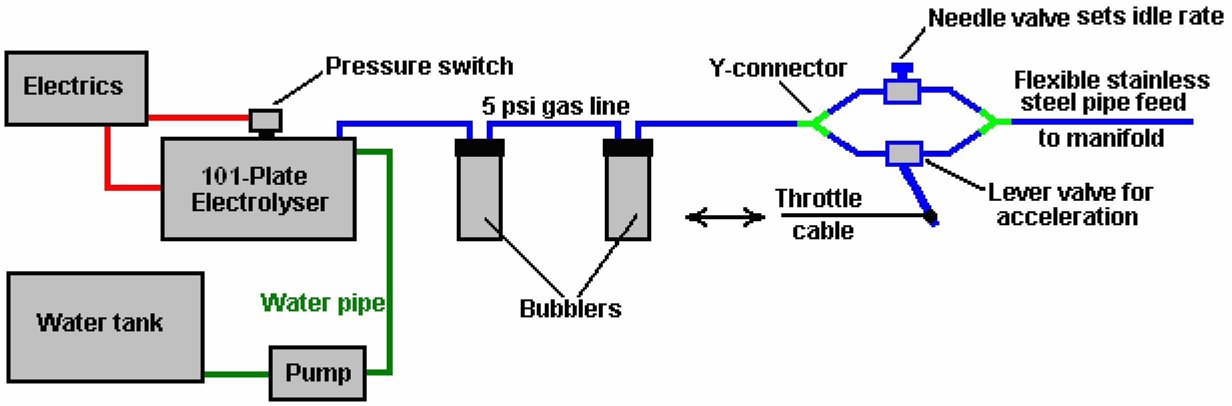

One supplier of flexible tubing suitable for this sort of work is http://www.titeflexcommercial.com but there will be many others.

Engine Size Limits

A 101-plate Boyce electrolyser accurately built, properly cleansed and conditioned, produces about 50 litres per minute of HHO gas continuously, when tuned properly and can sustain short bursts of 100 lpm. It is really not possible to say how much HHO gas is needed to operate any particular engine as the energy requirement varies so much from engine to engine even though they may have the same engine capacity. However, is very rough ball-park figures, it would not be unusual for a 2 litre capacity engine to run satisfactorily on 100 lpm of HHO gas. Please remember that when flow rates like 100 lpm or more are being dealt with, that it is essential to use a large-diameter pipe (say, one-inch diameter) from the electrolyser onwards. Also, the bubblers need to be physically larger. It is essential to avoid any possibility of large HHO gas bubbles forming a continuous path through the water in the bubbler as that would allow a flame-front to pass directly through the water in the bubbler which is exactly what the bubbler is there to prevent, so don't skimp on the size of the bubblers, especially as they will only be half-filled when the gas flow rate is very high. Bob Boyce explains the present limits on gas production as follows:

The impedance of the "MicroMetals T650" toroidal core reaches a maximum at 36 square inches per plate, it is possible to use one long 201-plate electrolyser, powered with double the voltage. The problem is that we can't increase the current density as it would increase the toroid temperature which would cause the permeability to decrease. However, we can increase the voltage without worrying about increasing the toroid temperature, so going to 240 volts AC is not a problem.

A 201-plate electrolyser could achieve 200 lpm which would be able to power a 3 to 4 litre engine. Ideally, an electrolyser of that type would have a microprocessor controller circuit board, as that should generate faster pulse transition speeds than the present circuit board. An electrolyser of that type would need a revised case design to take stainless steel plates which are 9 inches wide and 6 inches tall. The electrolyte level would then be set to a 4 inch depth, giving the same 36 square inches of active plate area.

A 101-plate electrolyser measures about 20 inches in length. A 201-plate unit would be about 40 inches long and so would fit into the boot (trunk) of a car or the back of a pick-up. This means that there is still more potential left in the "T650" toroid before there is any need to find a larger toroid.

An 8 inch toroid with a 101-plate unit could fuel an engine of up to 4 litres capacity. A 10 inch toroid driving a 101-plate unit could fuel a 5 litre engine. In these cases, the plate areas would be larger than 6" x 6" because with a larger toroid, the current can be increased without overheating the toroid and lowering it's permeability.

The information from Micrometals is that their hydraulic press can make toroids up to 8 inches in diameter, but the success rate diminishes as the diameter increases. As it is, the success rate for making the 6.5 inch diameter is their best economical rate. For larger diameters, the cost of the increased failure rate is passed on to the buyers.

There is word of a small private Canadian outfit that is working with 5 gallon pails of mining tailings to extract high-permeability materials which can be used to make larger toroids. They crush the tailings into fine powder with a huge milling stone, then pass the powder under a magnet to collect the magnetic material. They do this several times and then mix the remaining material with a binder to form a toroid.

Every company in the toroid making industry has their own proprietary formula for making toroids. This particular Canadian company's 6.5 inch toroid matches the Micrometals T650 pretty well. If there is enough interest, they can quote a quantity rate for a larger toroid.

Stationary Applications

Some people wish to try home applications with an electrolyser of this type, and they ask about powering the unit directly from the mains, rather than from the electrical system of a vehicle. This is a practical proposition and it has the advantage that size and weight are no longer of any great importance. The circuit would alter very slightly for this application as shown here:

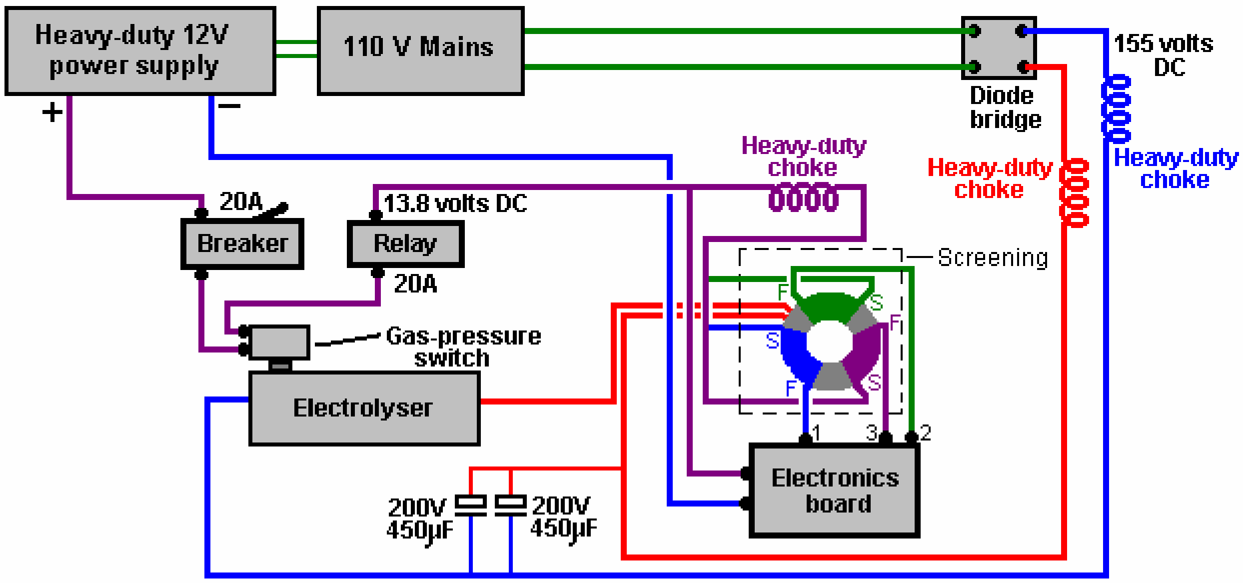

Here, instead of an inverter to create 110 volts AC, a car battery charger or mains Power Supply Unit is needed to provide the same voltage that the vehicle electrics would have provided. It would probably be worth putting a large value capacitor across the output of the car battery charger to help smooth out the voltage ripple which it will produce. Don't forget that it needs to be able to supply considerable current and so it will be rated as a "heavy-duty" battery charger. If a 200-cell unit is to be used, then a 1:2 mains step-up transformer will also be needed to raise the mains voltage to 220 volts.

In countries which have a 220 volt mains supply, then a 2:1 step-down mains transformer would be needed for a 100-cell unit but not for a 200-cell unit. The circuit would then be:

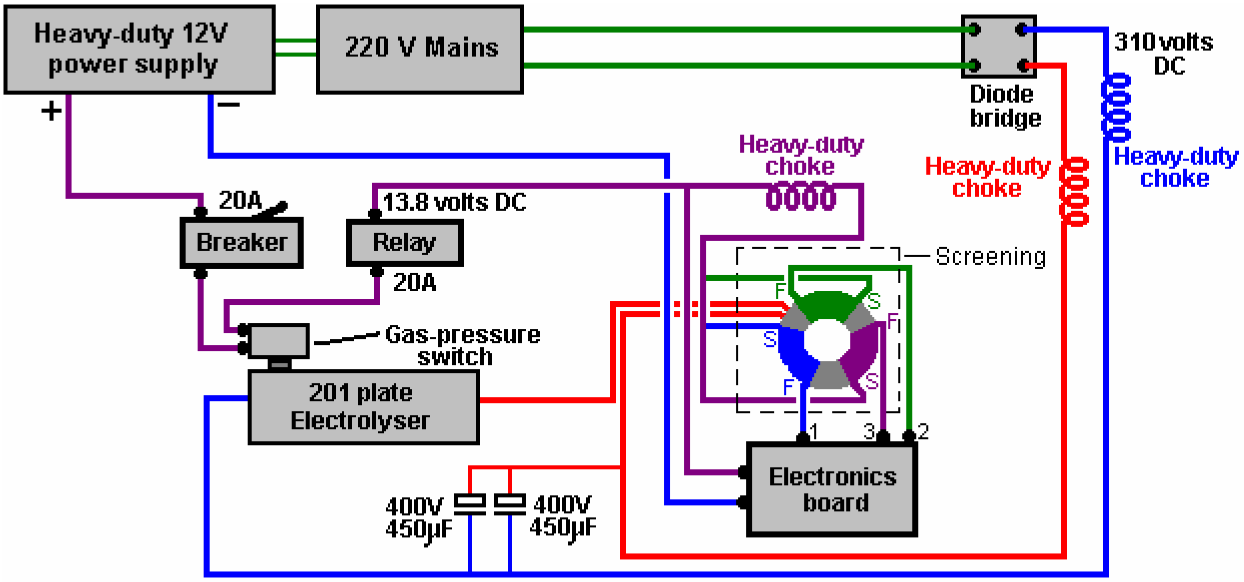

Bob Boyce's Experiences:

Bob had an electronics business down in south Florida where he owned and sponsored a small boat-race team through his business, starting in 1988. He had a machine shop behind his business, where he did engine work. He worked on engines for other racers and a local minisub research outfit which was building surface-running drone type boats for the DEA. He delved into hydrogen research and started building small electrolysers using distilled water mixed with an electrolyte. He then resonated the plates to improve the efficiency of the units. He discovered that with the right frequencies, He was able to generate 'monatomic' Hydrogen and Oxygen rather than the more common 'diatomic' versions of these gasses. When the 'monatomic' gasses are burnt, they produce about four times the energy output produced by burning the more common diatomic version of these gasses.

About 4% of diatomic Hydrogen in air is needed to produce the same power as petrol, while slightly less than 1% of monatomic Hydrogen in air is needed for the same power. The only drawback is that when stored at pressure, monatomic hydrogen reverts to its more common diatomic form. To avoid this, the gas must be produced on-demand and used right away. Bob used modified Liquid Petroleum carburettors on the boat engines to let them run directly on the gas produced by his electrolysers. Bob also converted an old Chrysler car with a slant six-cylinder engine to run on the hydrogen set-up and tested it in his workshop. He replaced the factory ignition with a high energy dual coil system and added an optical pickup to the crankshaft at the oil pump drive tang to allow external ignition timing adjustment. He used Bosch Platinum series spark plugs.

Bob never published anything about what he was working on, and he always stated that his boats were running on hydrogen fuel, which was allowed. Many years later that he found that he had stumbled on was already discovered and known as "Browns Gas", and there were companies selling the equipment and plans to make it.

Bob's electrolyser is fairly simple to make but it requires a lot of plates made of 316 stainless steel able to withstand the more exotic electrolytes which are more efficient, a plastic box to contain the plates, 1/8" spacers to keep the rows of plates apart, the electrolyte, and an adjustable-frequency modified pseudo-sinewave inverter for the drive electronics. A total of 101 plates 6 inches square are used to give a large surface area. These have their surfaces scoured with coarse sandpaper in an "X" pattern to give a fine crosshatch grain which added fine sharp points to the surfaces.

This is found to improve the efficiency of the electrolysis. The box has two threaded ports, a small one for injecting replacement distilled water, and a larger one for extracting the HHO gas. Under the top cover is a piece of plastic matting to prevent sloshing. It is very important to keep the electrolyte level below the tops of the plates to prevent current bypassing any cells and creating excessive water vapour.

Bob places a 5 **P**ounds per **S**quare **I**nch cut-off switch in a tee on the water injection port that shut the drive electronics down when the pressure in the unit hit 5 PSI. This allows the unit to be able to supply on demand without building up too much pressure in low-demand situations. He builds a bubbler from a large home cartridge type water-filter housing to prevent any backfire from travelling back up the gas feed pipe to the electrolyser. Without some sort of bubbler there is the risk of the electrolyser exploding if a flame front from the engine flows back to it.

The copper mesh screens designed for welding gasses will not work as hydrogen has a much higher flame propagation speed which passes straight through the copper mesh. The bubbler should be placed close to the engine so as to limit the amount of recombination of the gasses from monatomic to diatomic varieties. The HHO gas should be fed to the vapour portion of a **L**iquid **P**etroleum **G**as carburettor system. The carburettor will have to be modified for hydrogen use (different mixture rate than propane) and adjusted for best performance with the system running.

Bob found that the best electrolytes to use were Sodium Hydroxide (NaOH) and Potassium Hydroxide (KOH). While Sodium Hydroxide works well and is much easier to get ('Red Devil' lye found in most department stores) than the slightly more efficient Potassium Hydroxide. Whatever is used, be very careful what construction materials are used. Make absolutely sure that they are compatible with the chosen electrolyte (Plexiglas acrylic sheet was what Bob used). Never use glass containers for mixing or storing Potassium Hydroxide.

Bob never had the chance to drive the test Chrysler on the road with this system. Instead, he placed the rear end up on jack-stands and ran the engine under no-load conditions in drive just to test and tune the system and get an idea of how well the engine held up on the hydrogen fuel. The vehicle was run for a milometer recorded distance of one thousand miles in this set-up with the hydrolysis being fully powered by the alternator of the vehicle. With the vehicle running at idle, the drive electronics consumed approximately 4 to 4.3 Amps @ 13.8 V DC. With the rear wheels off of the ground, and the engine running with the vehicle speedometer registering 60 mph, the drive electronics drew approximately 10.9 to 11.6 Amps @ 13.8 V DC.

The unit does not use "normal brute force" electrolysis when operating in high efficiency mode. It relies mainly on a chemical reaction that takes place between the electrolyte used and the metal plates, which is maintained by electrical energy applied and stimulated into higher efficiency by the application of multiple harmonic resonances which help to "tickle" the molecules apart. Multiple cells in series are used to lower the voltage per cell and limit the current flow in order to reduce the production of water vapour. It relies on the large surface area of the total number of cells to get the required volume of fuel vapour output.

In the first prototype of this design, Bob used a custom built controller/driver which allowed a lot of adjustment so that performance could be tested using different frequencies, voltages, and waveforms individually. The result was a pattern of 3 interwoven square waves rich in harmonics that produced optimum efficiency. When Bob had the basics figured out he realised that he could just replace the custom controller/driver unit with a modified inverter (much easier than building a unit from scratch). He experimented using a 300 watt pseudo-sine wave inverter that had been modified so the base frequency could be adjusted between 700 and 800 Hz. The stepped sine wave output was fed through a bridge rectifier which turned each stepped sine wave into two positive stepped half waves. Each of these half waves had 8 steps, so a single cycle was turned into 16 steps. The resulting output, while not consisting of intermixed square waves, was still rich in harmonics, and it was much easier to adjust to the point of resonance than trying to tune 3 separate frequencies. Please note that these inverters are no longer available for purchase and that Bob's triple oscillator board design is far superior, giving more than double the output produced by the old inverter and is definitely the board to use with Bob's electrolyser.

The frequency range can change depending on the number of steps in the pseudo-sine wave of the inverter you choose since not all inverters are created equal. The desired effect is caused by the multiple harmonic resonances in the inverter output at higher frequencies. You will know when you hit resonance by the dramatic increase in gas output. The frequency does vary a bit depending on what electrolyte is used, the concentration of the electrolyte solution, the temperature of the electrolyte, water purity, etc.

Bear in mind that Bob's electrolyser tank was large enough to hold 61 plates of 316 grade stainless steel which were 6" X 6" each, spaced 1/8" apart, to create 60 cells in series, with the 130 V DC power from the inverter, through the bridge rectifier, applied to the end plates only. That gave 4,320 square inches of surface area, plenty of surface area to produce enough fuel for a vehicle engine. The best electrolyte for efficiency was Potassium Hydroxide, and the electrolyte level must be kept below the tops of the plates to prevent any current from bypassing the plates and creating excess water vapour through heating. Distilled water was used to prevent contamination of the electrolyte which would result in reduced performance and efficiency.

The unit had 316 grade stainless steel wires welded to the tops of the end plates. The other ends of the wires were welded to 316-grade stainless steel bolts which passed through holes in the ends of the container, with rubber o-ring gaskets inside and out, located above the liquid level.

There was a PVC spray bar attached on the inside of the chamber to the water injection port with tiny holes drilled along its length on the underside to supply replacement water evenly to the cells when the water pump was switched on. A backflow-prevention valve on top of the tee was used to keep the gas from flowing back into the water lines. There was a mat of interwoven plastic fibres (air conditioner filter material) cut and fitted on top of the plates to help prevent sloshing. Do not use fibreglass mat, which could cause a severe reaction with some electrolytes, like Potassium Hydroxide.

It is very important to understand that unless an engine is originally designed for, or later modified for, running on vapour fuel such as Liquid Petroleum Gas (natural gas), that water mist injection be added. Unless the engine has the proper valves for vapour fuel, the stock valves will not survive for extended run times on vapour fuel of any kind without additional cooling of some sort. This is an issue of valve design by the vehicle manufacturers, not something detrimental because of HHO gas combustion. The manufacturers want to prevent their cars from being adapted to high mileage operation without adverse effects, so they designed the valves to fail if not cooled by excess raw fossil fuel.

Suggested Design Features for High-power DC Electrolysers

The objective of this document is to present the relevant facts involved in DC electrolysis and provide practical suggestions for the physical construction, preparation and use of such devices.

Disclaimer

The contents of this document are presented for information purposes only. The author, Patrick J. Kelly does not recommend that anyone actually build any device based on this information and should anyone do so against his wishes, then it must be clearly understood that no responsibility attaches to Patrick J. Kelly as a result of those actions. By way of example, should somebody decide to construct an electrolyser based on this information and then drop the electrolyser on his toe, then Patrick J. Kelly is in no way liable for any resulting injury or damage to the electrolyser.

Background:

The very famous Michael Faraday who performed meticulous experimentation, investigated electrolysis and determined what current was needed to convert any given quantity of water into hydrogen and oxygen gasses. Teachers of science, quote Michael's results as being the final word on DC electrolysis.

In the last few years, Bob Boyce of the USA has researched DC electrolysis further and has achieved results which have been typically, 216% those of Faraday. This does not mean that Faraday was wrong, just that his results apply to the particular conditions under which he performed his tests. Essentially, he placed two metal electrodes in an electrolyte and passed electrical current between them, measuring the gas produced during each of his tests. From that information, he was able to deduce the relationship between current and gas production (**under those conditions**).

Bob Boyce had a different objective during his investigations, namely to determine if there was any way to raise the gas production per amp of current. His first step was to test various types of metal for the electrodes. Laboratory investigations tend to pick platinum for electrode use, but in fact, that is the worst possible metal to use as it acts as a catalyst to recombine hydrogen and oxygen gasses, and so has an in-built opposition to electrolysis. After much testing, 317L-grade was found to be an excellent choice, but due to its limited availability and high cost, 316L-grade is generally used instead.

The loss factors involved in electrolysis were then examined by following the path of the current. These are:

1. Resistance to current flow through the metal electrodes, (typically in the form of plates).
2. Resistance to flow between the electrode and the electrolyte.
3. Resistance to flow through the electrolyte itself.

These electrical losses produce heat, which in limited amounts is not a problem other than through wasted energy, but if left uncontrolled, causes considerable problems, namely the production of steam and hot water vapour which dilute the hydroxy gas and reduce the energy content of the output, and in extreme cases, melting or weakening the case material. Examining each of these, Bob found:

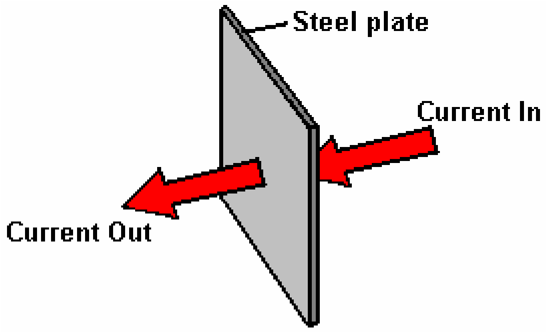

1. Resistance to current flow through the metal plates is something which can't be overcome easily and economically, and so has to be accepted as an overhead. Generally speaking, the heating from this source is low and not a matter of major concern.

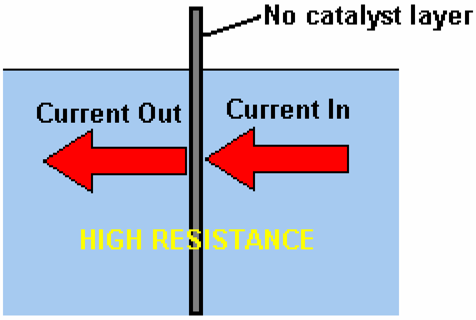

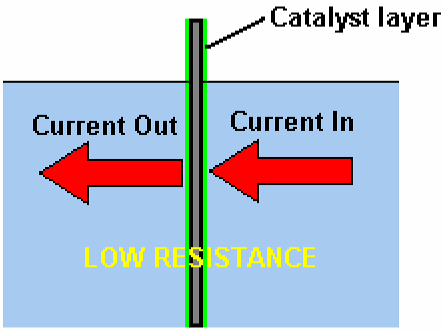

2. Resistance to flow between the electrode and the electrolyte is an entirely different matter, and major advances can be made in this area. After extensive testing, Bob discovered that a major improvement can be made if a catalytic layer is developed on the active plate surface. Details of how this is done are provided below.

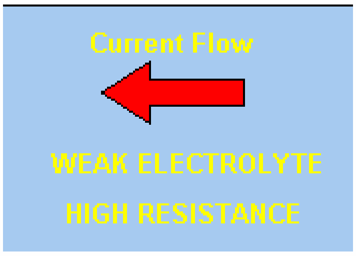

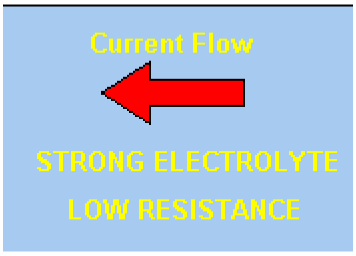

3. Resistance to flow through the electrolyte itself can be minimised by using the best catalyst at its optimum concentration, and controlling the current flow by using an electronic circuit. The options here are the use of a Pulse-Width Modulator (or “PWM”) circuit or a Constant-current Circuit. A PWM circuit switches the current off for any chosen percentage of the time. This reduces the average current flowing through the electrolyte and so controls the gas output rate. This circuit is manually set and adjusted as necessary. The Constant-current circuit maintains any chosen current through the electrolyte automatically. Another factor is the distance which the current has to flow through the electrolyte - the greater the distance, the greater the resistance. Reducing the inter-plate gap to a minimum improves the efficiency. However, practical factors come into play here as bubbles have to have sufficient space to escape between the plates, and in a compact series-connected electrolyser, the electrolyte volume between successive plates is severely restricted if the plates are over close to each other. Bob’s chosen compromise spacing is 3 mm. or one eighth of an inch.

These factors allow a doubling of Faraday’s results, or to put it another way, give Faraday’s gas output for less than half the current which he found it necessary to use. The best catalyst known at this time is potassium hydroxide or KOH. This is 20% more efficient in use than the next most suitable catalyse sodium hydroxide or NaOH. It is quite possible that a better catalyst may be discovered in the future, which would lower the current requirement further for any required gas output rate. The plate area is important for long electrode life and a plate area of at least 4 square inches per amp of current will give extended plate life. There is an advantage in having the plates wider than they are tall as this provides more electrolyte surface area

The creation of the very important catalyst layer on the working faces of the electrode plates is as follows:

The first step is to treat both surfaces of every plate to encourage gas bubbles to break away from the surface of the plate. This could be done by grit blasting, but if that method is chosen, great care must be taken that the grit used does not contaminate the plates. Stainless steel plates are not cheap and if you get grit blasting wrong, then the plates will be useless as far as electrolysis is concerned. A safe method which Bob much prefers is to score the plate surface with coarse sandpaper. This is done in two different directions to produce a cross-hatch pattern. This produces microscopic sharp peaks and valleys on the surface of the plate and those sharp points and ridges are ideal for helping bubbles to form and break free of the plate.

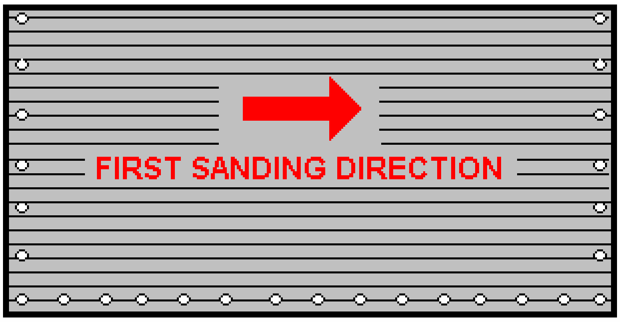

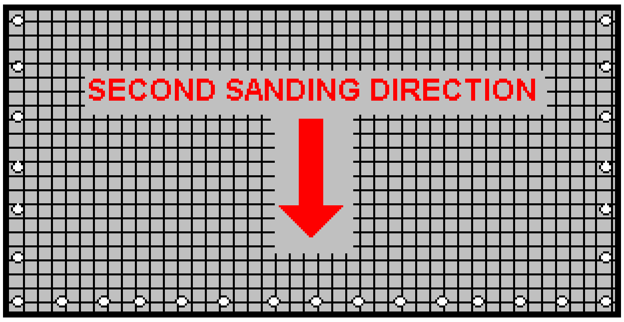

Bob uses a 6-inch x 48-inch belt sander which is great for preparing the plates and he uses it all the time now with 60 or 80 grit. Always wear rubber gloves when handling the plates to avoid getting finger marks on the plates. Wearing these gloves is very important as the plates must be kept as clean and as grease-free as possible, ready for the next stages of their preparation.

Any particles created by the sanding process should now be washed off the plates. This can be done with clean tap water (not city water though, due to all the chlorine and other chemicals added), but only distilled water is used for the final rinse.

The next step in the preparation process is to make up a weak solution of sodium hydroxide. This is done by adding small amounts of the sodium hydroxide to water held in a container. The container must not be glass as most glass containers are made from glass of insufficient quality to allow mixing of electrolyte in them. Sodium hydroxide (“caustic soda” often sold as drain cleaner) is **always** used for plate cleansing.

While both Potassium Hydroxide (KOH) and Sodium Hydroxide (NaOH) are excellent materials, they both are highly caustic and so need to be treated with care. In the following section, the mixing of KOH is described, but the same precautions also apply when mixing NaOH. So be very methodical and careful when making up a solution of either:

Always store the hydroxide in a sturdy air-tight container which is clearly labelled "DANGER! - Potassium Hydroxide". Keep the container in a safe place, where it can’t be reached by children, pets or people who won't take any notice of the label. If your supply of KOH is delivered in a strong plastic bag, then once you open the bag, you should transfer all its contents to sturdy, air-tight, plastic storage containers, which you can open and close without risking spilling the contents. Hardware stores sell large plastic buckets with air tight lids that can be used for this purpose.

When working with dry hydroxide flakes or granules, wear safety goggles, rubber gloves, a long sleeved shirt, socks and long trousers. Also, don’t wear your favourite clothes as a hydroxide solution is not the best thing to get on clothes. It is also good practice to wear a face mask which covers your mouth and nose. If you are mixing solid hydroxide with water, always add the hydroxide to the water, and not the other way round, and use a plastic container for the mixing, preferably one which has double the capacity of the finished mixture. The mixing should be done in a well-ventilated area which is not draughty as air currents can blow the dry hydroxide around.

When mixing the electrolyte, **never** use warm water. The water should be cool because the chemical reaction between the water and the hydroxide generates a good deal of heat. If possible, place the mixing container in a larger container filled with cold water, as that will help to keep the temperature down, and if your mixture should “boil over” it will contain the spillage. Add only a small amount of hydroxide at a time, stirring continuously, and if you stop stirring for any reason, put the lids back on all containers.

If, in spite of all precautions, you get some hydroxide solution on your skin, wash it off with plenty of running cold water and apply some vinegar to the skin. Vinegar is acidic, and will help balance out the alkalinity of the hydroxide. You can use lemon juice if you don't have vinegar to hand - but it is always recommended to keep a bottle of vinegar handy.

Plate Cleansing:

Plate cleansing is **always** done with NaOH. Prepare a 5% to 10% (by weight) NaOH solution and let it cool down. A 5% solution 'by weight' is 50 grams of NaOH in 950 cc of water. A 10% solution 'by weight' is 100 grams of NaOH in 900 cc of water. As mentioned before, never handle the plates with your bare hands, but always use clean rubber gloves. Put the sanded and rinsed plates into the slots in the electrolyser case. Fill the electrolyser with the NaOH solution until the plates are just covered.

A voltage is now applied across the whole set of plates by attaching the leads to the outermost two plates. This voltage should be at least 2 volts per cell, but it should not exceed 2.5 volts per cell. Maintain this voltage across the set of plates for several hours at a time. The current is likely to be 4 amps or more. As this process continues, the boiling action will loosen particles from the pores and surfaces of the metal. This process produces hydroxy gas, so it is very important that the gas is not allowed to collect anywhere indoors (such as on ceilings).

After several hours, disconnect the electrical supply and pour the electrolyte solution into a container. Rinse out the cells thoroughly with distilled water. Filter the dilute NaOH solution through paper towels or coffee filters to remove the particles. Pour the dilute solution back into the electrolyser and repeat this cleaning process. You may have to repeat the electrolysis and rinsing process many times before the plates stop putting out particles into the solution. If you wish, you can use a new NaOH solution each time you cleanse, but you can go through a lot of solution just in this cleaning stage if you choose to do it that way. When cleansing is finished (typically, after three days), do a final rinse with clean distilled water. It is very important that during cleansing, during conditioning and during use, that the polarity of the electrical power is always the same. In other words, don't swap the battery connections over as that destroys all the preparation work and requires the cleansing and conditioning processes to be carried out all over again.

Plate Conditioning:

Using the same concentration of NaOH solution as in cleansing, fill the electrolyser with the dilute solution up to 1/2" below the tops of the plates. Do not overfill the cells. Apply about 2 volts per cell and allow the unit to run. Remember that very good ventilation is essential during this process. The cells may overflow, but this is ok for now. As water is consumed, the levels will drop. Once the cells stabilise with the liquid level at the plate tops or just below, monitor the current draw. If the current draw is fairly stable, continue with this conditioning phase continuously for two to three days, adding just enough distilled water to replace what is consumed. If the solution changes colour or develops a layer of crud on the surface of the electrolyte, then the cell stack needs more cleansing stages. Do not allow the cells to overfill and overflow at this point. After two to three days of run time, pour out the dilute NaOH solution and rinse out the electrolyser thoroughly with distilled water. When the plates are conditioned, bubbles will not stick to them but will break away freely. The catalytic layer causes the plates to take on a bronze colouring.

Cell Operation:

Mix up a full-strength 28% 'by weight' solution of potassium hydroxide, that is 280 grams of KOH added to 720 cc of water. Fill the electrolyser of this design to about an 8-inch depth, which leaves some 4-inches of freeboard to help contain splashes caused by the very high rate of electrolysis. The DC voltage applied to the electrolyser will be about 2 volts per cell, so this 150-cell electrolyser will have about 300 volts applied to it. This voltage is generated by rectifying the 220 volt AC mains.

Troubleshooting:

1. Abnormally low current is caused by improper plate preparation or severe contamination. Take the plates out of the electrolyser and start over again from plate preparation.

2. Abnormally high current is caused by high leakages between cells. This will require the re-building or tightening up of the plate array case.

3. If current starts high and then drops off, this means that the plates are contaminated. Take the plates out of the electrolyser and start over again from plate preparation.

4. Any time there is uneven voltage distribution between cells in a series cell, it means that there is either a large variation in surface preparation from cell to cell, or there is ion leakage between the cells. Surface preparation issues will tend to show up as one or more cells having higher voltage, but not in any specific order. Ion leakage (also called bypass leakage) shows up as uneven voltage distribution, typically higher at the end cells.

Voltage distribution should be even, and within a few hundredths of a volt. Variation of tenths of a volt means that there is a major problem. Make sure that your plate array is clamped tightly. Check for any place at all for liquid to flow, as this will allow ion leakage to bypass your central "floating" plates.

The Gas Produced:

Schoolteachers will tell you that the electrolysis of water produces hydrogen gas (H_2) and oxygen gas (O_2). While this is true, it is only part of the story. Water dissolves things so well that “pure” water really does not exist. Rain falling from the sky will have absorbed atmospheric gasses on its way down and is no longer “pure” by the time it reaches the ground.

As it flows along the surface of the ground and through the fabric of the landscape, it absorbs minerals of all descriptions, and as it flows down streams the splashing causes it to absorb more atmospheric gasses (which is just as well for the fish living in that water). If it reaches a water treatment plant, it will be injected with chlorine to kill the bacteria in it, and possibly fluorine to “improve the teeth” of the people who drink it.

Tap water is an electrolyte, but one where you don’t know what is in it. Tap water samples taken in different towns will contain a very different mix of additives while samples taken in different countries will have even greater differences between them.

Most people would be inclined to say “who cares?” but this is an important matter when electrolysis of water is being considered. If you use tap water for electrolysis, then as the electrolysis proceeds, the “pure” water is removed as a mixture of hydrogen gas and oxygen gas. This releases the air dissolved in the water, so mixed with the hydroxy gas is an unknown amount of air which is 78% Nitrogen. The dissolved solids and any solids in suspension in the water, get left behind and they collect in the bottom of the electrolyser. As a large proportion of naturally occurring landscape has iron salts in it, a good deal of these may collect in the bottom of the electrolyser. One common element is iron oxide, commonly known as “rust” and although it is not the best, it is a conductor of electricity, so it has been know for electrolyser plates to get shorted out by a conductive layer building up between the plates. This short-circuits the plates, cuts the gas production and generates excess heat - generally, a condition to be avoided.

For this reason, it is strongly recommended that the working KOH electrolyte be made up with either distilled water or de-ionised water, and the water used for replacing the water lost through electrolysis also be distilled or de-ionised water. It should be realised that even when using distilled water, the hydroxy gas produced will also have dissolved air in it.

Supplying Water:

Surprisingly, supplying water to replace that which has been converted to hydroxy gas, is not a simple task. Firstly, there is a 5 psi gas pressure inside the electrolyser and so a one-way valve needs to be placed in the water supply line in order to prevent the gas pressure pushing the water out and letting gas escape through the water supply apparatus.

In addition, there is considerable difficulty in knowing when water is needed and how much should be introduced into the electrolyser and added to that is the difficulty in adding exactly the same amount to each of the 150 cells which are only 3 mm wide. While it is not essential that each of the 150 cells has exactly the same electrolyte level, it is very important that the added water is exactly the same amount for each cell, otherwise the cell electrolyte levels will get progressively out of step. There is a degree of automatic balancing of the levels in that a fuller cell is likely to produce slightly more gas and so use slightly more water, thus balancing the levels, but this slight difference cannot be relied on to offset unevenly supplied water.

Recently, Ed Holdgate and Tom Thayer designed a double-pipe arrangement for the water supply and it is said to work adequately, so using a slightly longer version of their design may well be a satisfactory solution. However, this part of the design should be considered as an area for careful checking under working conditions and possible future modification to provide an enhanced operation. Overall the operation would be:

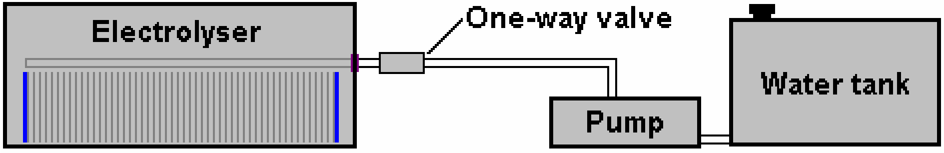

The problem of assessing the correct electrolyte level is made more difficult by the severe bubbling caused by the electrolysis which will have the surface of the liquid in constant vertical motion. Optical sensing is not likely to be effective. Overall weight of the electrolyser is a possible guide but is an unusual approach to the problem and so is probably not a first choice. The normal approach is to use two wires as a sensor as electrical conduction will take place when they are connected by electrolyte. However, this environment with low conductivity electrolyte being splashed all over the place makes for the possibility of somewhat erratic operation, but in spite of that, it is probably the best method.

For this style of sensor a pair of stiff stainless steel wires insulated in shrink wrap or a narrow plastic tube is run down between two of the central plates and positioned on opposite sides of the gap as shown here:

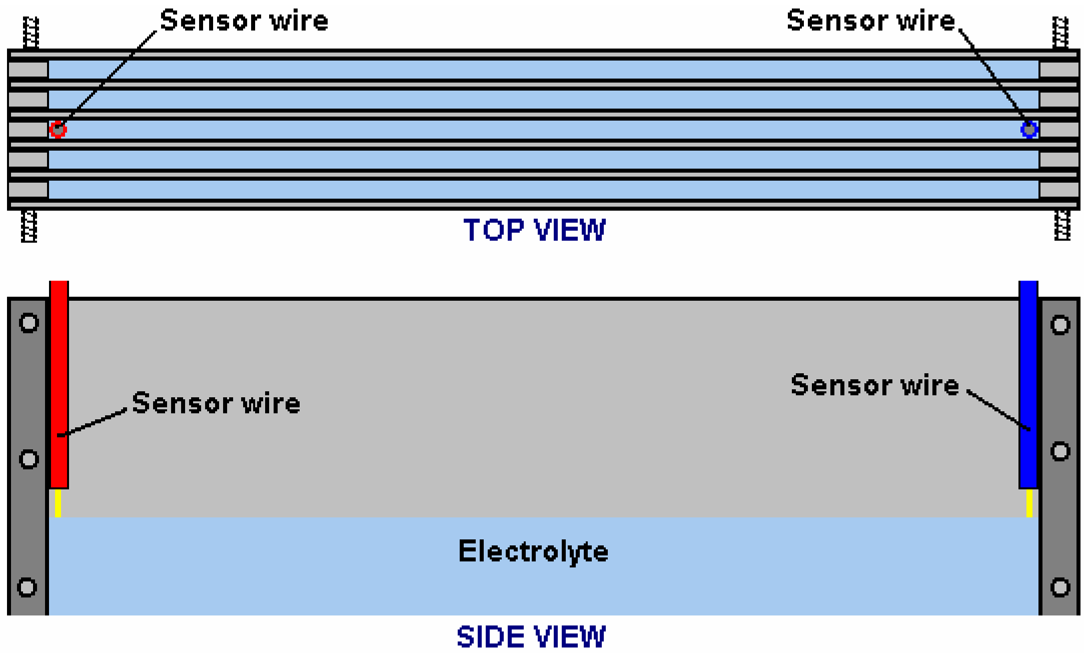

The electronic circuit being fed by this sensor will have a delay of several seconds so that bubbling does not cause false triggering of the water feed. In other words, the electronic sensor circuit will only power the water pump if the electrical connection through the electrolyte between the two sensor wires is lost for several consecutive seconds.

Physical Construction:

To a casual glance, the physical construction of a high-performance electrolyser looks simple but the reality is that it is anything but that. A low-performance electrolyser can have sloppy construction. There are some difficulties which have to be overcome in order to get a top performance.

1. It is vital to avoid having any kind of bypass path for the electrical current which would allow it to flow from the negative terminal to the positive terminal without passing through the electrode plates. While this sounds easy to achieve, it is not actually so.

2. It is important to extract the hydroxy gas from the electrolyser while leaving all of the electrolyte behind. This sounds obvious, but in high gas volume operations it is not a trivial thing to achieve.

3. It is important that the temperature of the electrolyser does not rise to an unacceptable level which could cause damage to the electrolyser case or fittings, or which could generate steam or excess water vapour which would dilute the hydroxy gas and lower the efficiency of the fuel.

4. It is important that there is no possibility of a spark being generated inside the electrolyser by a loose electrical connection.

The Bob Boyce electrolyser design is a very convenient construction for the user but it calls for precision construction to 0.0003” accuracy which is well outside the scope of amateur builders. A DC electrolysis unit does not have the need for this degree of accuracy and so I would suggest an adaptation of Bob Boyce’s style of construction for small boosters. This builds up an array of plates clamped together with threaded rods and held apart by U-shaped insulating spacers.

The spacers need to be made of a material which is slightly flexible so that when clamped between two steel plates it forms a completely watertight seal. The material also need to be wholly resistant to the strongly caustic KOH solution being used as an electrolyte.

This plate array can be a self-contained unit with the end plates reinforced against flexing with either a thick piece of acrylic plastic or by making them out of thick stainless steel. All metal components inside the electrolyser need to be made of the same grade of metal, otherwise galvanic erosion will take place as the whole inside of the electrolyser will have a damp conductive gas in it. The arrangement could be like this:

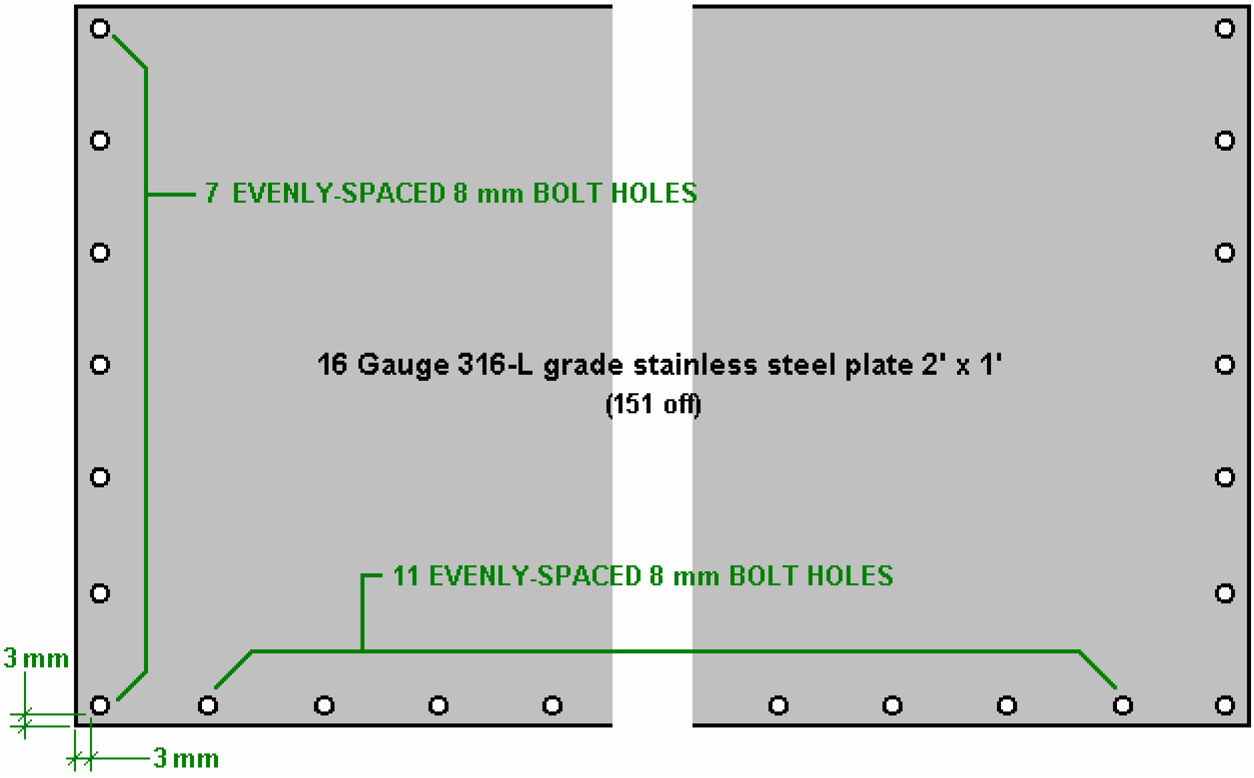

Here an evenly spaced ring of bolt holes to take 8 mm bolts is drilled around three edges of each of the 151 plates. The holes will be 8.5 mm in diameter if 8 mm threaded plastic rods are used. The spacing of the holes is just under two inches as 3 mm clearance is needed at the edges and the stainless steel plates supplied may not be exactly 2 feet by 1 foot but one sixteenth of a metric size plate. The exact plate size is not critical nor is the exact spacing of the threaded rods.

It may be preferred to use stainless steel threaded rods rather than the less robust plastic rods, in which case the hole diameter will be increased, probably to 10 mm or the threaded rod diameter reduced to 6 mm as the whole length of the rod running through the plates will be encased in plastic sleeving in order to prevent electrical contact between the plates and the rods as shown here:

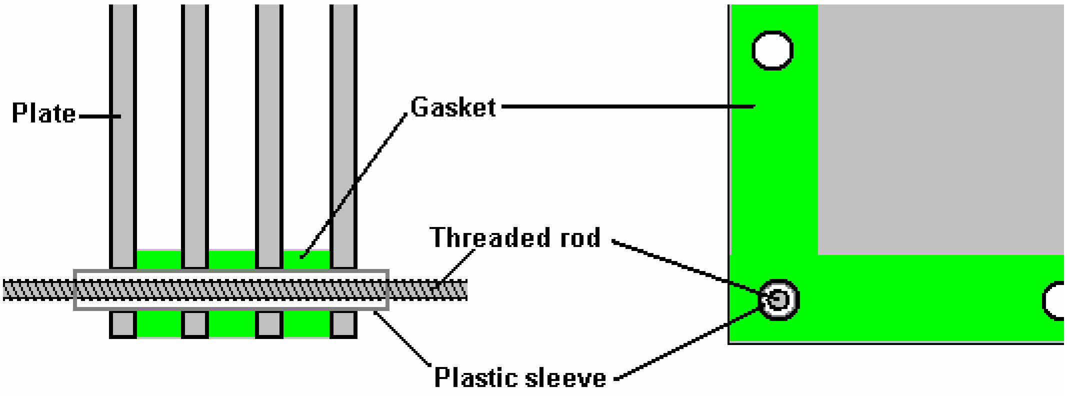

The 150 gaskets match the edges of the plates and have a width of 6 mm greater than the diameter of the hole drilled for the rods which clamp the plate array together:

Applying this style of construction produces a compact plate array with the desired plate spacing, low accuracy components which can be obtained quite readily. The electrical connections to the end plates are TIG welded straps as shown here:

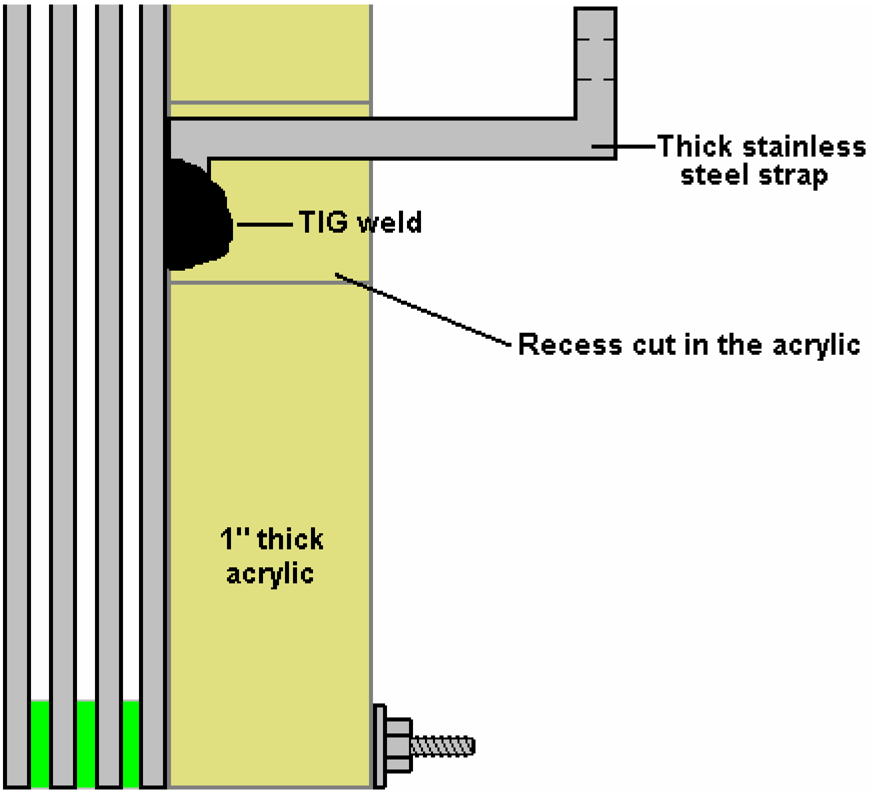

A rectangular hole is cut through the acrylic backing plate to allow a TIG welded strap of thick stainless steel to project through it and provide a good electrical connection. The strap is bolted through the outer case using a stainless steel bolt and a gasket to ensure that it will not allow gas to escape.

An outer case of thick acrylic can be used to house the plates, water-supply pipe, etc. and contain the hydroxy gas, forcing it to enter the gas supply pipe feed to the generator engine. The outer case is **never** made from any kind of metal no matter how attractive the idea seems. While the possibility of an explosion inside the electrolyser is most unlikely, safety is the number one priority and if an explosion were to take place inside a metal-cased electrolyser, then it would act like a landmine, scattering lethal shrapnel in every direction. Pop-off lids, and shatter discs seem attractive options to many people, but these are useless with hydroxy gas which contains the ideal proportions of hydrogen fuel and oxygen, which when ignited produce a shock-wave so fast that these devices do not have time to operate. An electrolyser of the size and proportions suggested here contains far too much hydroxy gas to be contained by any kind of metal casing.

Baffle System:

It must be assumed that the high rate of gas production will cause splashing and even with having some four inches of plate above the surface of the electrolyser, that tiny droplets will be projected upwards above the plates. It is essential that these droplets are trapped and that any KOH vapour mixed with the hydroxy gas is removed before the gas is fed to the engine.

A set of baffles above the plates can be used to intercept any droplets and return them to the electrolyte again, and two bubblers can be used to wash any KOH vapour out of the hydroxy gas and protect both the engine and prevent a serious explosion in the unlikely event of a malfunction of the generator engine. The baffles can be made of acrylic and could be like this:

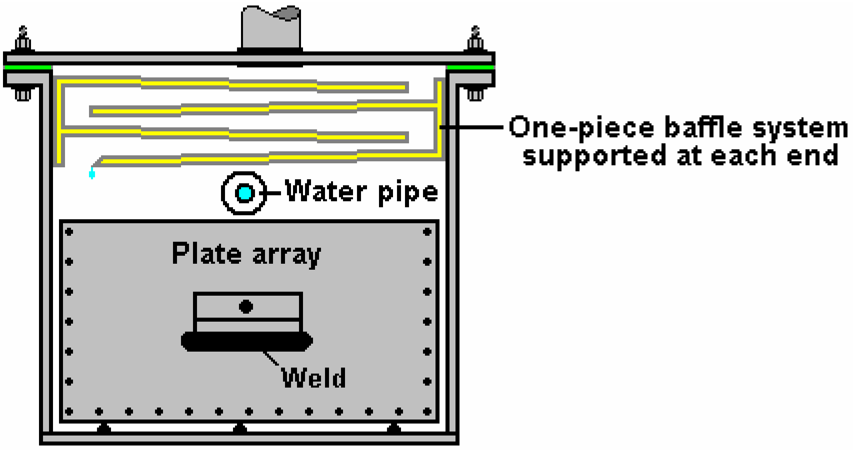

Ideally, the lower end of the lowest baffle plate is grooved so that there is a ridge on the underside of the baffle located just above each body of electrolyte so that any drips land directly where they should.

The Outer Case:

As this electrolyser design is built up from the separate self-contained components of the plate array, the water supply pipe pair and the baffle plate array, it is necessary to enclose these in an outer case as shown above. It could easily be thought that this case is of little consequence and so could be constructed from almost any material, but this is not so as the case has to be able to withstand prolonged exposure to strong KOH electrolyte and to be robust enough not to break if an attempt to pick it up off the floor.

A construction of this general size will have a substantial weight as it contains some 300 square feet of stainless steel sheet, plus more than three cubic feet of electrolyte weighing about 248 pounds or 113 Kg. So the plates and electrolyte will weigh about 1,000 pounds or 460 Kg. and therefore if it is intended that the electrolyser is to be picked up and moved, it will be necessary to place it on a pallet or use a steel plate under the case with angle irons at the corners and a central lifting point for a hoist.

Considering these facts, the case should be constructed from acrylic sheet 25 mm thick. Acrylic sheets can be connected together with a solvent which the supplier of the acrylic can provide. This does not ‘glue’ the sheets together but actually combines them into one integral piece with no join. Surprisingly, this actually calls for a high degree of precision in cutting the sheets which are to be joined together as the requirement is for a perfect mating of the two surfaces before the solvent is applied. It might be noted that Ed Holdgate who has high quality machine tools, years of experience and a high level of personal skill, sub-contracts the jointing of the acrylic components which go to make up a Bob Boyce electrolyser case.

Bubblers:

A fact which is easily overlooked is the sheer volume of gas coming off an electrolyser of this size. It is one thing to calculate the diameter of pipe needed to carry the gas flow, but another to realise that the same gas flow needs to pass continuously through a bubbler and the bubbler design has to accommodate that volume and yet ensure that all of the gas comes into intimate contact with the water.

Perhaps then the first step is to establish a suitable pipe size for the gas flow. At this point in time it is not known exactly what efficiency and performance can be expected from this particular design operating on 300 volts and 30 amps of current. It is probably safe to predict that the gas rate will not exceed 250 litres per minute which is 4.2 litres per second.

Passing through a standard 90 mm (3.5“) diameter pipe of 63 sq. cm. cross-sectional area that would require a flow rate of 66 cm. per second or just over two feet per second. While that is possible and 10 bar pipe of that diameter is available at £4.40 plus VAT per metre.

The next standard pipe size is 110 mm (4.3”) which has a cross-sectional area of 95 sq. cm. which would give a flow rate of 44 cm./sec. or just under 1.5 ft/sec. which is a perfectly reasonable rate of flow. The cost of that pipe in 10-bar rating is just over £6 plus VAT per metre.

The next standard pipe size is 160 mm (6.3“) which has a cross-sectional area of 201 sq. cm. which would give a flow rate of 21 cm./sec. or just under 0.8 ft/sec. and the cost of that pipe in 10-bar rating is just over £14.23 plus VAT per metre.

These figures indicate that cost is not a significant factor and while moving from a reasonably convenient 90 mm diameter pipe to the much less convenient 160 mm size more than halves the flow rate, there does not seem to be any reason to go over the 90 mm size. The actual gas pressure in the electrolyser will be held down to 5 psi (0.36 bar) as compressing hydroxy gas is not a particularly safe thing to do. Consideration should be given to using piping which is specifically constructed to carry hydrogen, but it seems unlikely that it would be readily available in the larger sizes needed.

So, basing the bubbler dimensions on a 90 mm diameter pipe, the bubbler arrangement might be like this:

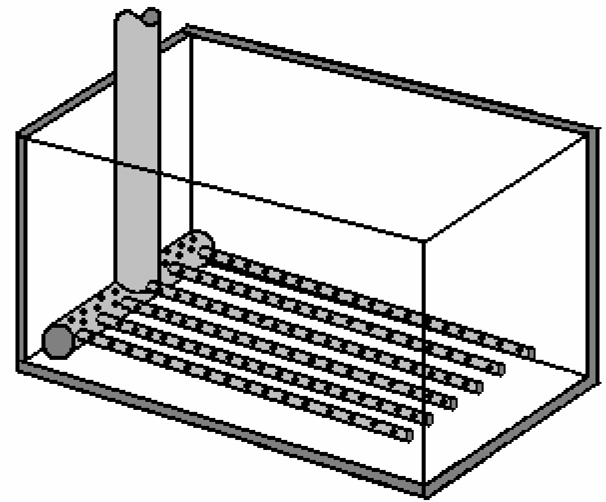

CUT-AWAY PERSPECTIVE

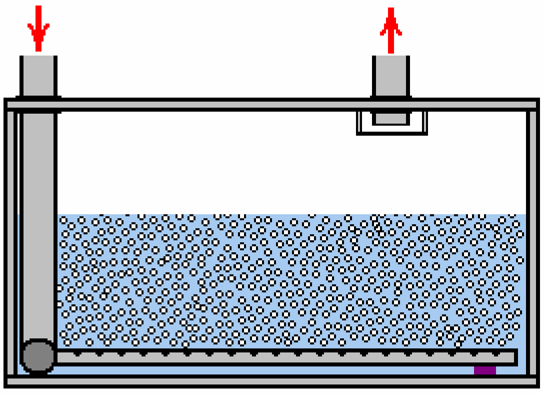

SIDE VIEW

The objective being to ensure that there is a very large number of small bubbles streaming up through a considerable depth of water. The most suitable dimensions are a matter of opinion but as space is not an issue I would suggest the following:

The cross-sectional area of the inner diameter of the small diameter pipes laid on the bottom of the bubbler should exceed the cross-sectional area of the main incoming pipe. For clarity, the above diagram shows just six of these pipes but there is no reason why there should not be a much larger number. If there were just six pipes and an incoming pipe of diameter of 90 mm, then the small pipe diameter would be 18 mm internal diameter or greater.

It would also be good if the cross-sectional area of the holes drilled in these smaller pipes exceeded the cross-sectional area of the small pipe. As there should be a very large number of small holes, it is highly likely that it desirable target will be met quite easily.

I would suggest that the depth of water above the top of the small pipes be eight inches or 200 mm and that perhaps half of that depth be allowed between the water surface and the top of the container. The outlet pipe is shown with a baffle, but with stationary operation, constant flow and the dimensions suggested, it is unlikely that it will have any significant work to do.

The piping between the electrolyser and the bubbler, and between the first bubbler and the second one, should be kept as short as is reasonable.

Controlling Current Flow:

In a DC electrolyser such as this one, the gas flow rate is directly proportional to the current flowing through the electrolyte. The amount of gas per amp of current is highly dependent on the electrical efficiency of the construction (something which the casual onlooker will not see). It does no harm to stress again that the plate cleansing and conditioning are of major importance. It is very difficult for most people to be patient during the preparation stages as they are impatient to see their construction performing, but it is vitally important for that performance that the construction and preparation are carried out fully and without haste, as with high-quality painting, the finished quality depends to a major extent on the preparation work undertaken before the finishing coats are applied. So too with electrolysers, the output efficiency depends heavily on the quality of the preparation work.

However, as the current flow is the controlling factor in the rate of gas production, having a circuit which holds the current flow steady even if conditions such as temperature were to alter. It is, of course, vital to have safety devices which cut off the electrolyser if the generator stops running. The high-power, high-voltage, constant-current circuit prototype being proposed for this application is intending to use the oil pressure of the generator as an indication of engine shutdown. It is also proposed that a 5 psi pressure switch be used to cut the electrical power if the internal pressure rises above its design level. However, the pressure switch is liable to be ineffective in this instance as the potential rate of gas production is so high and the gas is fed into open air side of the air filter which will allow it to escape and that would be dangerous unless the air intake is fed from a pipe which connects to the open air, in which case, excess hydroxy gas would escape harmlessly into the open where it would quickly disperse and cease to be a danger.

The proposed electrical supply arrangement is then:

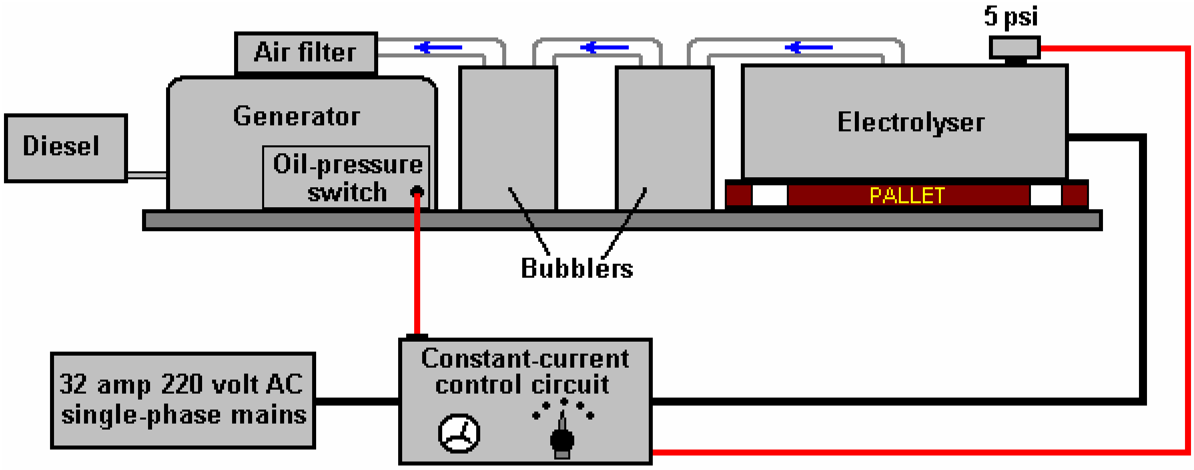

Here, the electronic control circuit is receiving input signals to indicate the performance of the generator and the electrolyser, allowing it to adjust the current accordingly. If it is not possible to connect to the oil pressure switch of the generator, then the constant-current control circuit can be made to operate by sensing the voltage produced by the generator and use that to detect the generator stopping.

Enhancements:

It has been remarked that high operating temperatures in the electrolyser are not welcome because of the production of steam and hot water vapour. In passing, the electrolyser could be placed in a water-cooled jacket or bath to keep the temperature down. This is not likely to be necessary as the electrolyser design is very efficient with two volts per cell, the best electrolyte and conditioned catalyst interface layers between the plates and the electrolyte.

Steam and hot water vapour are not wanted as they are not capable of expanding further and so they just take up space inside the engine cylinders, space which would much better be filled with a useful fuel like hydroxy gas. However, it is a very different matter if instead of steam a fine spray of water droplets is introduced instead. When combustion takes place inside the cylinder, the temperature rises suddenly and those water droplets convert instantly into flash-steam, creating increased pressure on the piston, raising the engine power and doing it without using any fuel at all. It also lowers the running temperature of the engine which is generally beneficial and tends to give longer engine life.

Producing fine water droplets is not particularly easy, but some aquarium outlets, pet shops and garden centres can supply a “pond fogger” which does exactly that at low cost and low input current. It is distinctly possible that feeding the output of one or more of these into the air entering the engine may give an improvement in performance and fuel economy.

The High-Power Devices of Don Smith.

One of most impressive developers of free-energy devices is Don Smith who has produced many spectacular devices, generally with major power output. These are a result of his in-depth knowledge and understanding of the way that the environment works. Don says that his understanding comes from the work of Nikola Tesla as recorded in Thomas C. Martin's book "The Inventions, Researches, and Writings of Nikola Tesla" ISBN 0-7873-0582-0 available from http://www.healthresearchbooks.com and various other book companies. This book can be downloaded from http://www.free-energy-info.tuks.nl as a pdf file, but a paper copy is much better quality and easier to work from.

Don states that he repeated each of the experiments found in the book and that gave him his understanding of what he prefers to describe as the 'ambient background energy' which is called the 'zero-point energy field' elsewhere in this eBook. Don remarks that he has now advanced further than Tesla in this field, partly because of the devices now available to him and which were not available when Tesla was alive.

Don stresses two key points. Firstly, a dipole can cause a disturbance in the magnetic component of the 'ambient background' and that imbalance allows you to collect large amounts of electrical power, using capacitors and inductors (coils). Secondly, you can pick up as many powerful electrical outputs as you want from that one magnetic disturbance, without depleting the magnetic disturbance in any way. This allows massively more power output than the small power needed to create the magnetic disturbance in the first place. This is what produces a COP>1 device and Don has created nearly fifty different devices based on that understanding.

Although they get removed quite frequently, there is one video which is definitely worth watching if it is still there. It is located at http://www.metacafe.com/watch/2820531/don_smith_free_energy/ and was recorded in 2006. It covers a good deal of what Don has done. In the video, reference is made to Don's website but you will find that it has been taken over by Big Oil who have filled it with innocuous similar-sounding things of no consequence, apparently intended to confuse newcomers. A website which is run by Conny Öström of Sweden is http://www.johnnyfg.110mb.com/ and it has brief details of his prototypes and theory. You will find the only document of his which I could locate, here http://www.free-energy-info.com/Smith.pdf in pdf format, and it contains the following patent on a most interesting device which appears to have no particular limit on the output power. This is a slightly re-worded copy of that patent as patents are generally worded in such a way as to make them difficult to understand.

Patent NL 02000035 A 20th May 2004 Inventor: Donald Lee Smith

TRANSFORMER GENERATOR MAGNETIC RESONANCE INTO ELECTRIC ENERGY

ABSTRACT

The present invention refers to an Electromagnetic Dipole Device and Method, where wasted radiated energy is transformed into useful energy. A Dipole as seen in Antenna Systems is adapted for use with capacitor plates in such a way that the Heaviside Current Component becomes a useful source of electrical energy.

DESCRIPTION

Technical Field:

This invention relates to loaded Dipole Antenna Systems and their Electromagnetic radiation. When used as a transformer with an appropriate energy collector system, it becomes a transformer/generator. The invention collects and converts energy which is radiated and wasted by conventional devices.

Background Art:

A search of the International Patent Database for closely related methods did not reveal any prior art with an interest in conserving radiated and wasted magnetic waves as useful energy.

DISCLOSURE OF THE INVENTION

The invention is a new and useful departure from transformer generator construction, such that radiated and wasted magnetic energy changes into useful electrical energy. Gauss meters show that much energy from conventional electromagnetic devices is radiated into the ambient background and wasted. In the case of conventional transformer generators, a radical change in the physical construction allows better access to the energy available. It is found that creating a dipole and inserting capacitor plates at right angles to the current flow, allows magnetic waves to change back into useful electrical (coulombs) energy. Magnetic waves passing through the capacitor plates do not degrade and the full impact of the available energy is accessed. One, or as many sets of capacitor plates as is desired, may be used. Each set makes an exact copy of the full force and effect of the energy present in the magnetic waves. The originating source is not depleted of degraded as is common in conventional transformers.

BRIEF DESCRIPTION OF THE DRAWINGS

The Dipole at right angles, allows the magnetic flux surrounding it to intercept the capacitor plate, or plates, at right angles. The electrons present are spun such that the electrical component of each electron is collected by the capacitor plates. Essential parts are the South and North component of an active Dipole. Examples presented here exist as fully functional prototypes and were engineer constructed and fully tested in use by the Inventor. In each of the three examples shown in the drawings, corresponding parts are used.

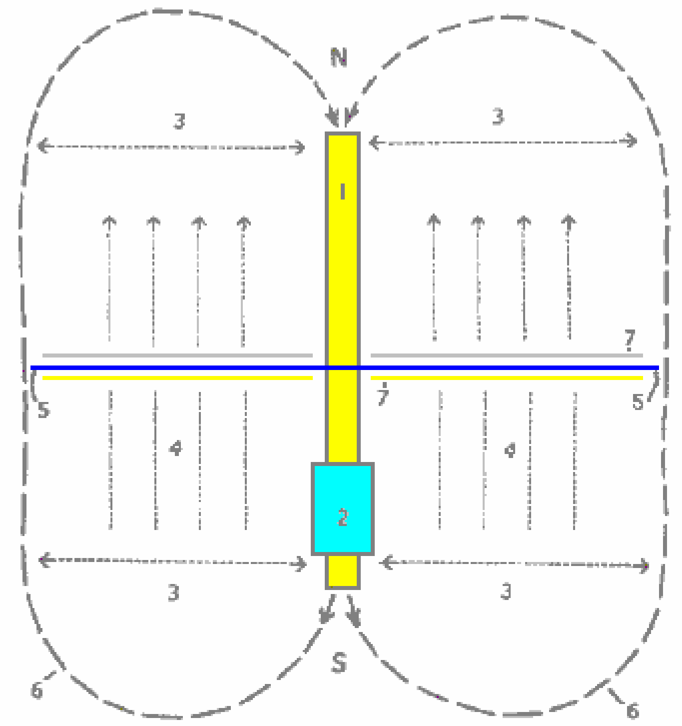

Fig.1 is a View of the Method, where **N** is the North and **S** is the South component of the Dipole.

Here, **1** marks the Dipole with its North and South components. **2** is a resonant high-voltage induction coil. **3** indicates the position of the electromagnetic wave emission from the Dipole. **4** indicates the position and flow direction of the corresponding Heaviside current component of the energy flow caused by the induction coil **2**. **5** is the dielectric separator for the capacitor plates **7**. **6** for the purposes of this drawing, indicates a virtual limit for the scope of the electromagnetic wave energy.

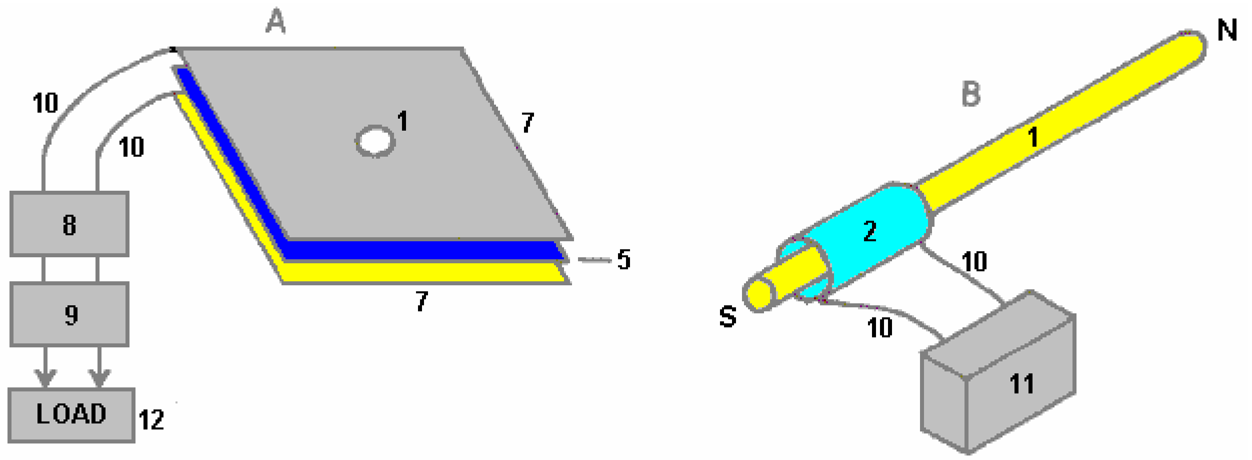

Fig.2 has two parts **A** and **B**.

In **Fig.2A** **1** is the hole in the capacitor plates through which the Dipole is inserted and in **Fig.2B** it is the Dipole with its North and South poles shown. **2** is the resonant high-voltage induction coil surrounding part of the Dipole **1**. The dielectric separator **5**, is a thin sheet of plastic placed between the two capacitor plates **7**, the upper plate being made of aluminium and the lower plate made of copper. Unit **8** is a deep-cycle battery system powering a DC inverter **9** which produces 120 volts at 60 Hz (the US mains supply voltage and frequency, obviously, a 240 volt 50 Hz inverter could be used here just as easily) which is used to power whatever equipment is to be driven by the device. The reference number **10** just indicates connecting wires. Unit **11** is a high-voltage generating device such as a neon transformer with its oscillating power supply.

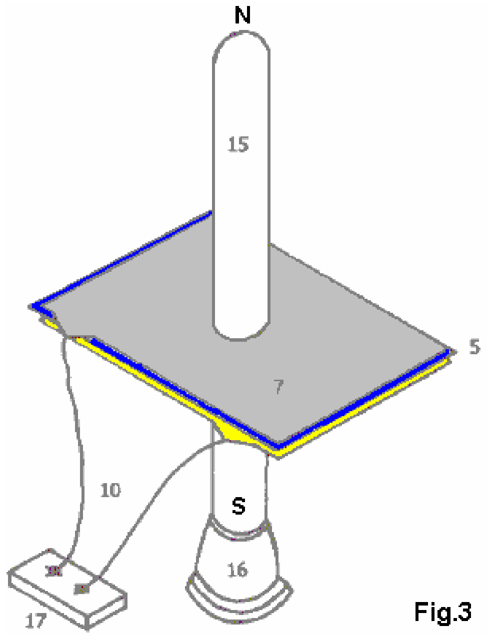

Fig.3

Fig.3 is a Proof Of Principal Device using a Plasma Tube as an active Dipole. In this drawing, **5** is the plastic sheet dielectric separator of the two plates **7** of the capacitor, the upper plate being aluminium and the lower plate copper. The connecting wires are marked **10** and the plasma tube is designated **15**. The plasma tube is four feet long (1.22 m) and six inches (150 mm) in diameter. The high-voltage energy source for the active plasma dipole is marked **16** and there is a connector box **17** shown as that is a convenient method of connecting to the capacitor plates when running tests on the device.

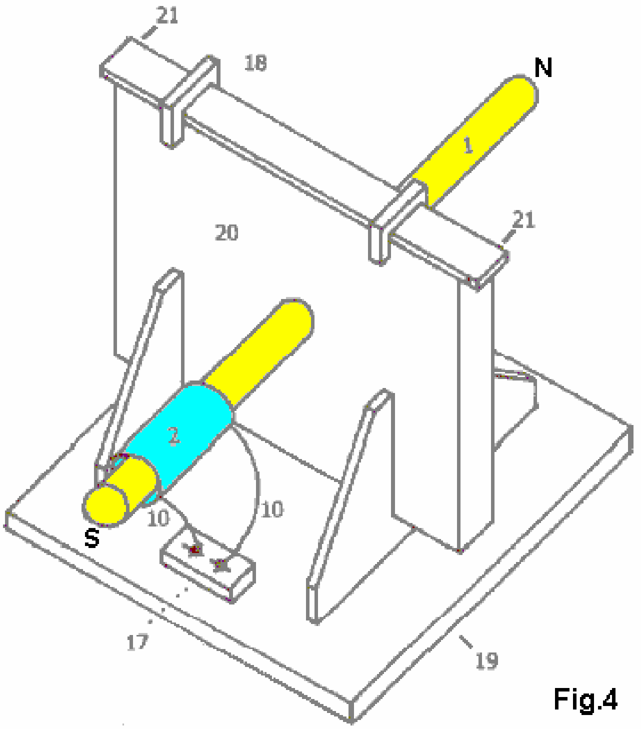

Fig.4

Fig.4 shows a Manufacturer's Prototype, constructed and fully tested. **1** is a metal Dipole rod and **2** the resonant high-voltage induction coil, connected through wires **10** to connector block **17** which facilitates the connection of it's high-voltage power supply. Clamps **18** hold the upper edge of the capacitor packet in place and **19** is the base plate with it's supporting brackets which hold the whole device in place. **20** is a housing which contains the capacitor plates and **21** is the point at which the power output from the capacitor plates is drawn off and fed to the DC inverter.

BEST METHOD OF CARRYING OUT THE INVENTION

The invention is applicable to any and all electrical energy requirements. The small size and it's high efficiency make it an attractive option, especially for remote areas, homes, office buildings, factories, shopping centres, public places, transportation, water systems, electric trains, boats, ships and 'all things great and small'. The construction materials are commonly available and only moderate skill levels are needed to make the device.

CLAIMS

1. Radiated magnetic flux from the Dipole, when intercepted by capacitor plates at right angles, changes into useful electrical energy.

2. A Device and Method for converting for use, normally wasted electromagnetic energy.

3. The Dipole of the Invention is any resonating substance such as Metal Rods, Coils and Plasma Tubes which have interacting Positive and Negative components.

4. The resulting Heaviside current component is changed to useful electrical energy.

****

This patent does not make it clear that the device needs to be tuned and that the tuning is related to its physical location. The tuning will be accomplished by applying a variable-frequency input signal to the neon transformer and adjusting that input frequency to give the maximum output.

Don Smith has produced some forty eight different devices, and because he understands that the real power in the universe is magnetic and not electric, these devices have performances which appear staggering to people trained to think that electrical power is the only source of power.

The device shown below is physically quite small and yet it has an output of 160 kilowatts (8000 volts at 20 amps) from an input of 12 volts 1 amp (COP = 13,333):

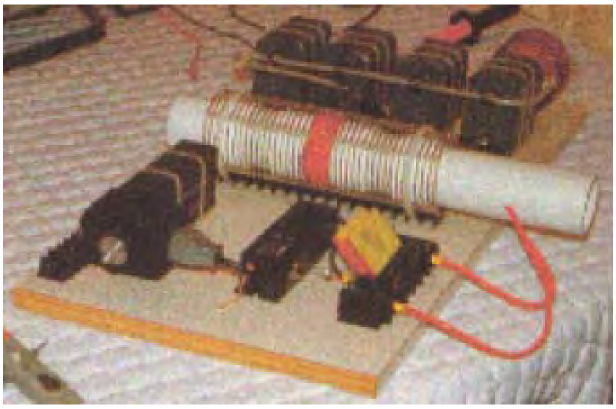

This is a device which can be placed on top of a table and is not a complicated form of construction, having a very open and simplistic layout. However, some components are not mounted on this board. The twelve volt battery and connecting leads are not shown, nor are the ground connections, the step-down isolation transformer and the varistor used to protect the load from over-voltage by absorbing any random induced voltage spikes which might occur.
The device shown above has various subtle points glossed over in spite of this being one device which Don says that we should be able to reproduce ourselves. Let me state here that reproducing this seemingly simple design of Don's is not an easy thing to do and it is not something which can be thrown together by a beginner using whatever components happen to be at hand at the time. Having said that, with careful study and commonsense application of some obvious facts, it should be possible to make one of these devices, but more of these things later on when a much more detailed description of this device is given.

Another of Don's devices, somewhat similar to the one described in his patent, is shown here:

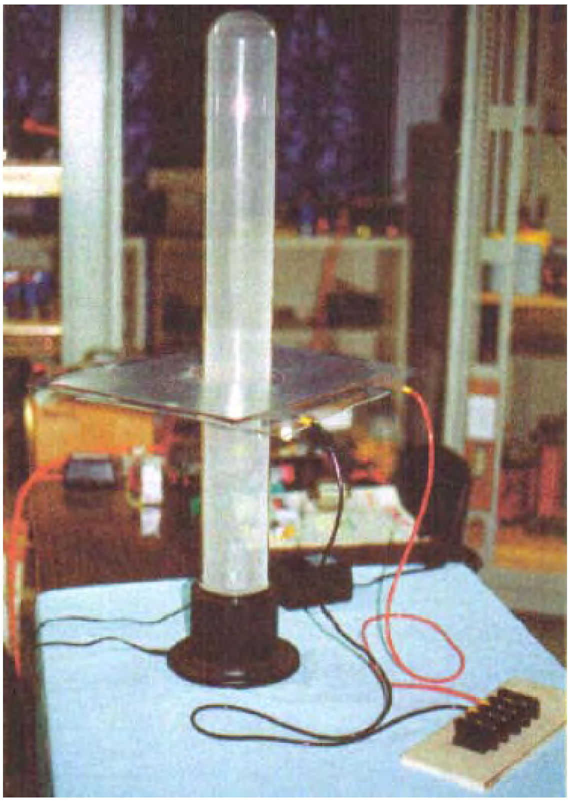

This is a larger device which uses a plasma tube four feet (1.22 m) long and 6 inches (150 mm) in diameter. The output is a massive 100 kilowatts. This is the design shown as one of the options in Don's patent. Being an

Electrical Engineer, none of Don's prototypes are in the "toy" category. If nothing else is taken from Don's work, we should realise that high power outputs can be had from very simple devices.

There is one other brief document "Resonate Electrical Power System" from Don Smith which says:

Potential Energy is everywhere at all times, becoming useful when converted into a more practical form. There is no energy shortage, only grey matter. This energy potential is observed indirectly through the manifestation of electromagnetic phenomenon, when intercepted and converted, becomes useful. In nonlinear systems, interaction of magnetic waves amplify (conjugate) energy, providing greater output than input. In simple form, in the piano where three strings are struck by the hammer, the centre one is impacted and resonance activates the side strings. Resonance between the three strings provides a sound level greater than the input energy. Sound is part of the electromagnetic spectrum and is subject to all that is applicable to it.

"Useful Energy" is defined as "that which is other than Ambient". "Electric Potential" relates to mass and it's acceleration. Therefore, the Earth's Mass and Speed through space, gives it an enormous electrical potential. Humans are like the bird sitting unaware on a high voltage line. in nature, turbulence upsets ambient and we see electrical displays. Tampering with ambient, allows humans to convert magnetic waves into useful electricity.

Putting this in focus, requires a look at the Earth in general. During each of the 1,440 minutes of each day, more than 4,000 displays of lightning occur. Each display yields more than 10,000,000 volts at more than 200,000 amperes in equivalent electromagnetic flux. This is more than 57,600,000,000,000 volts and 1,152,000,000,000 amperes of electromagnetic flux during each 24 hour period. This has been going on for more than 4 billion years. The USPTO insist that the Earth's electrical field is insignificant and useless, and that converting this energy violates the laws of nature. At the same time, they issue patents in which, electromagnetic flux coming in from the Sun is converted by solar cells into DC energy. Aeromagnetic flux (in gammas) Maps World-Wide, includes those provided by the US Department of Interior-Geological Survey, and these show clearly that there is present, a spread of 1,900 gamma above Ambient, from reading instruments flown 1,000 feet above the (surface) source. Coulomb's Law requires the squaring of the distance of the remote reading, multiplied by the recorded reading. Therefore, that reading of 1,900 gamma has a corrected value of 1,900 x 1,000 x 1,000 = 1,900,000,000 gamma.

There is a tendency to confuse "gamma ray" with "gamma". "Gamma" is ordinary, everyday magnetic flux, while "gamma ray" is high-impact energy and not flux. One gamma of magnetic flux is equal to that of 100 volts RMS. To see this, take a Plasma Globe emitting 40,000 volts. When properly used, a gamma meter placed nearby, will read 400 gammas. The 1,900,000,000 gamma just mentioned, is the magnetic ambient equivalent of 190,000,000 volts of electricity. This is on a "Solar Quiet" day. On "Solar Active" days it may exceed five times that amount. The Establishment's idea that the Earth's electrical field is insignificant, goes the way of their other great ideas.

There are two kinds of electricity: "potential" and "useful". All electricity is "potential" until it is converted. The resonant-fluxing of electrons, activates the electrical potential which is present everywhere. The Intensity/CPS of the resonant-frequency-flux rate, sets the available energy. This must then be converted into the required physical dimensions of the equipment being used. For example, energy arriving from the Sun is magnetic flux, which solar cells convert to DC electricity, which is then converted further to suit the equipment being powered by it. Only the magnetic flux moves from point "A" (the Sun) to point "B" (the Earth). All electrical power systems work in exactly the same way. Movement of Coils and Magnets at point "A" (the generator) fluxes electrons, which in turn, excite electrons at point "B" (your house). **None of the electrons at point "A" are ever transmitted to point "B"**. In both cases, the electrons remain forever intact and available for further fluxing. This is not allowed by Newtonian Physics (electrodynamics and the laws of conservation). Clearly, these laws are all screwed up and inadequate.

In modern physics, USPTO style, all of the above cannot exist because it opens a door to overunity. The good news is that the PTO has already issued hundreds of Patents related to Light Amplification, all of which are overunity. The Dynode used to adjust the self-powered shutter in your camera, receives magnetic flux from light which dislodges electrons from the cathode, reflecting electrons through the dynode bridge to the anode, resulting in billions of more electrons out than in. There are currently, 297 direct patents issued for this system, and thousands of peripheral patents, all of which support overunity. More than a thousand other Patents which have been issued, can be seen by the discerning eye to be overunity devices. What does this indicate about Intellectual Honesty?

Any coil system, when fluxed, causes electrons to spin and produce useful energy, once it is converted to the style required by its use. Now that we have described the method which is required, let us now see how this concerns us.

The entire System already exists and all that we need to do is to hook it up in a way which is useful to our required manner of use. Let us examine this backwards and start with a conventional output transformer. Consider one which has the required voltage and current handling characteristics and which acts as an isolation transformer. Only the magnetic flux passes from the input winding to the output winding. No electrons pass through from the input side to the output side. Therefore, we only need to flux the output side of the transformer to have an electrical output. Bad design by the establishment, allowing hysteresis of the metal plates, limits the load which can be driven. Up to this point, only potential is a consideration. Heat (which is energy loss) limits the output amperage. Correctly designed composite cores run cool, not hot.

A power correction factor system, being a capacitor bank, maintains an even flow of flux. These same capacitors, when used with a coil system (a transformer) become a frequency-timing system. Therefore, the inductance of the input side of the transformer, when combined with the capacitor bank, provides the required fluxing to produce the required electrical energy (cycles per second).

With the downstream system in place, all that is needed now is a potential system. Any flux system will be suitable. Any amplification over-unity output type is desirable. The input system is point "A" and the output system is point "B". Any input system where a lesser amount of electrons disturbs a greater amount of electrons - producing an output which is greater than the input - is desirable.

At this point, it is necessary to present updated information about electrons and the laws of physics. A large part of this, originates from me (Don Smith) and so is likely to upset people who are rigidly set in the thought patterns of conventional science.

Non - Ionic Electrons

As a source of electrical energy, non-ionic electrons doublets exist in immense quantities throughout the universe. Their origin is from the emanation of Solar Plasma. When ambient electrons are disturbed by being spun or pushed apart, they yield both magnetic and electrical energy. The rate of disturbance (cycling) determines the energy level achieved. Practical methods of disturbing them include, moving coils past magnets or vice versa. A better way is the pulsing (resonant induction) with magnetic fields and waves near coils.

In coil systems, magnetic and amperage are one package. This suggests that electrons in their natural non-ionic state, exist as doublets. When pushed apart by agitation, one spins right (yielding Volts-potential electricity) and the other spins left (yielding Amperage-magnetic energy), one being more negative than the other. This further suggests that when they reunite, we have (Volts x Amps = Watts) useful electrical energy. Until now, this idea has been totally absent from the knowledge base. The previous definition of Amperage is therefore flawed.

Electron Related Energy

Left hand spin of electrons results in Electrical Energy and right hand spin results in Magnetic Energy. Impacted electrons emit visible Light and heat.

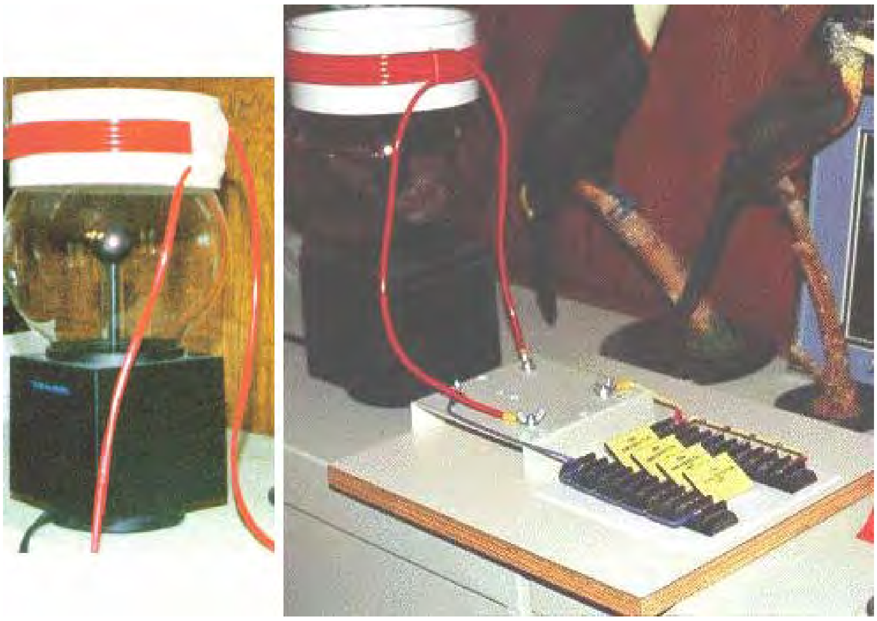

Useful Circuits, Suggestions for Building an Operational Unit

1. Substitute a Plasma Globe such as Radio Shack's "Illumna-Storm" for the source-resonant induction system. It will have about 400 milligauss of magnetic induction. One milligauss is equal to 100 volts worth of magnetic induction.

2. Construct a coil using a 5-inch to 7-inch (125 to 180 mm) diameter piece of PVC for the coil former.

3. Get about 30 feet (10 m) of Jumbo-Speaker Cable and separate the two strands. This can be done by sticking a carpet knife into a piece of cardboard or wood, and then pulling the cable carefully past the blade to separate the two insulated cores from each other. (PJK Note: "Jumbo-Speaker Cable" is a vague term as that cable comes in many varieties, with anything from a few, to over 500 strands in each core).

4. Wind the coil with 10 to 15 turns of wire and leave about 3 feet (1 m) of cable spare at each end of the coil. Use a glue gun to hold the start and finish of the coil.

5. This will become the "L - 2" coil shown in the Circuits page.

6. When sitting on top of the Plasma Globe (like a crown) you have a first-class resonant air-core coil system.

7. Now, substitute two or more capacitors (rated at 5,000 volts or more) for the capacitor bank shown on the Circuits page. I use more than two 34 microfarad capacitors.

8. Finish out the circuit as shown. You are now in business !

9. Voltage - Amperage limiting resistors are required across the output side of the Load transformer. These are used to adjust the output level and the desired cycles per second.

Useful Circuits from Nikola Tesla

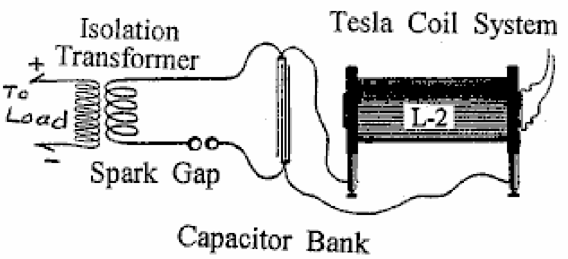

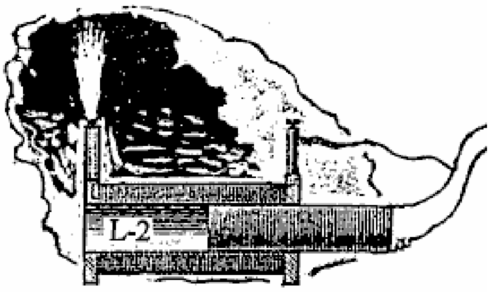

Tunable Coil System
Insertable Movable L-1

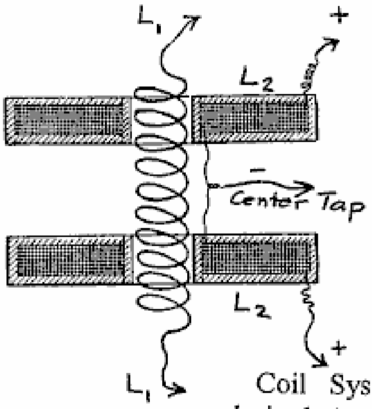

Coil System having
desired Amperage Output

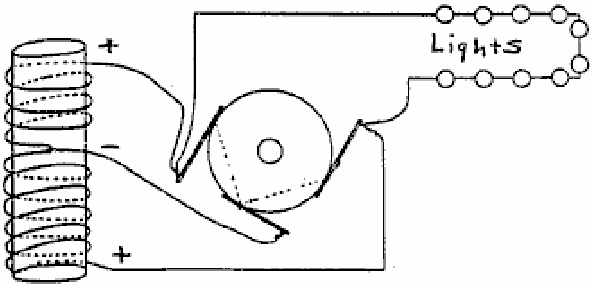

Armature (generator)
taking place of the L - 1
yields desired Amperage

Don Smith's Suggestions: Get a copy of the "Handbook of Electronic Tables and Formulas", published by Sams, ISBN 0-672-22469-0, also an Inductance/Capacitance/Resistance meter is required. Chapter 1 of Don's pdf document has important time-constant (frequency) information and a set of reactance charts in nomograph style (*"nomograph": a graph, usually containing three parallel scales graduated for different variables so that when a straight line connects values of any two, the related value may be read directly from the third at the point intersected by the line*) which makes working, and approximating of the three variables (capacitance, inductance and resistance) much easier. If two of the variables are known, then the third one can be read from the nomograph.

For example, if the input side of the isolation transformer needs to operate at 60 Hz, that is 60 positive cycles and 60 negative cycles, being a total of 120 cycles. Read off the inductance in Henries by using an Inductance meter attached to the input side of the isolation transformer. Plot this value on the (nomographic) reactance chart. Plot the needed 120 Hz on the chart and connect these two points with a straight line. Where this line crosses the Farads line and the Ohms line, gives us two values. Choose one (resistor) and insert it between the two leads of the transformer input winding.

The Power Correction Factor Capacitor (or bank of more than one capacitor) now needs adjusting. The following formula is helpful in finding this missing information. The capacitance is known, as is the desired potential to pulse the output transformer. One Farad of capacitance is one volt for one second (one Coulomb). Therefore, if we want to keep the bucket full with a certain amount, how many dippers full are needed? If the bucket needs 120 volts, then how many coulombs are required?

$$\frac{\textbf{Desired Voltage}}{\textbf{Capacitance in Microfarads}} = \textbf{Required frequency in Hz}$$

Now, go to the nomograph mentioned above, and find the required resistor jumper to place between the poles of the Correction Factor Capacitor.

An earth grounding is desirable, acting as both a voltage-limiter and a transient spike control. Two separate earths are necessary, one at the Power Factor Capacitor and one at the input side of the isolation transformer. Off-the-shelf surge arrestors / spark gaps and varistors having the desired voltage/potential and amperage control are commonly available. Siemens, Citel America and others, make a full range of surge arrestors, etc. Varistors look like coin-sized flat capacitors. Any of these voltage limiters are marked as "V - 1" in the following text.

It should be obvious that several separate closed circuits are present in the suggested configuration: The power input source, the high-voltage module, a power factor capacitor bank combined with the input side of the isolation transformer. Lastly, the output side of the isolation transformer and its load. None of the electrons active at the power source (battery) are passed through the system for use downstream. At any point, if the magnetic flux rate should happen to vary, then the number of active electrons also varies. Therefore, controlling the flux rate controls the electron (potential) activity. Electrons active at point "A" are not the same electrons which are active at point "B", or those at point "C", and so on. If the magnetic flux rate (frequency Hz) varies, then a different number of electrons will be disturbed. This does not violate any Natural Law and it does produce more output energy than the input energy, should that be desirable.

A convenient high-voltage module is a 12 volt DC neon tube transformer. The Power Factor Correction Capacitors should be as many microfarads as possible as this allows a lower operating frequency. The 12-volt neon tube transformer oscillates at about 30,000 Hz. At the Power Correction Factor Capacitor bank we lower the frequency to match the input side of the isolation transformer.

Other convenient high-voltage sources are car ignition coils, television flyback transformers, laser printer modules, and various other devices. Always lower the frequency at the Power Factor Correction Capacitor and correct, if needed, at the input side of the isolation transformer. The isolation transformer comes alive when pulsed. Amperage becomes a part of the consideration only at the isolation transformer. Faulty design, resulting in hysteresis, creates heat which self-destructs the transformer if it is overloaded. Transformers which have a composite core instead of the more common cores made from many layers of thin sheets of soft iron, run cool and can tolerate much higher amperage.

RESONATE ELECTROMAGNETIC POWER SYSTEM

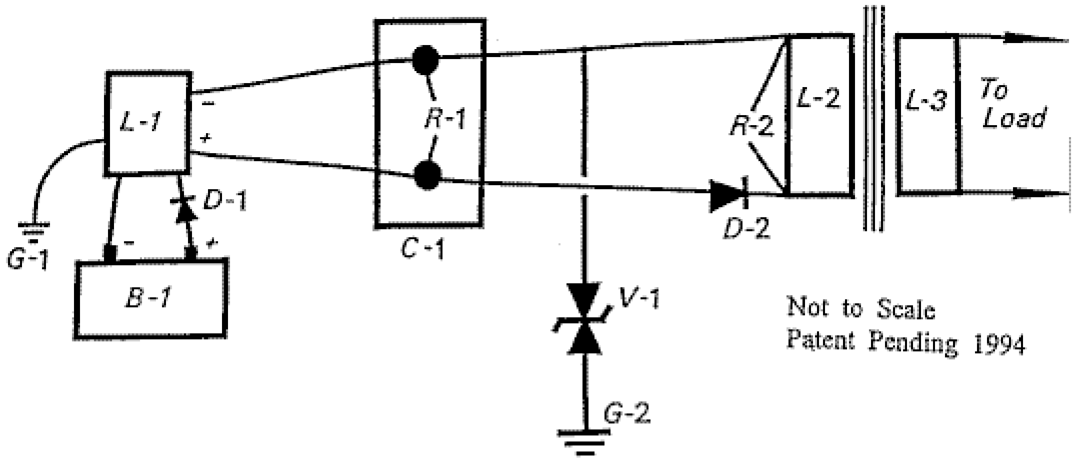

Not to Scale
Patent Pending 1994

Power Source: B - 1 Gelcell, 12 Volt, 7 Amp Hour
D - 1 Kick back protection for L - 1
L - 1 Bertonee, NPS - 12D8, constant burn Neon Tube transformer, Bertonee, Boston, MS

Power Conditioner: C - 1, Capacitor or Capacitor Bank, 8,000 microfarads for 480 volts DC. R - 1, Resistor used to set electron pump rate, frequency of the capacitor. Maintains the desired voltage level required to operate the system.

Voltage Control: V-1, Varistor, limits the voltage as required for the Output Transformer L -2. (480 V @ 60 Amps)

Output Transformer: Isolation Type, (L - 2 / L-3) with R - 2 (resistor) correcting the output frequency to 60 CPS, being 60 UP and 60 DN (120 total). (28.8 KVA)

Useful Timing Formulas:

T = frequency in cycles per second
C = capacitance in microfarads
L = Inductance in milliheneries
R = resistance in ohms

Therefore: $T = RC$ and $T = \frac{L}{R}$

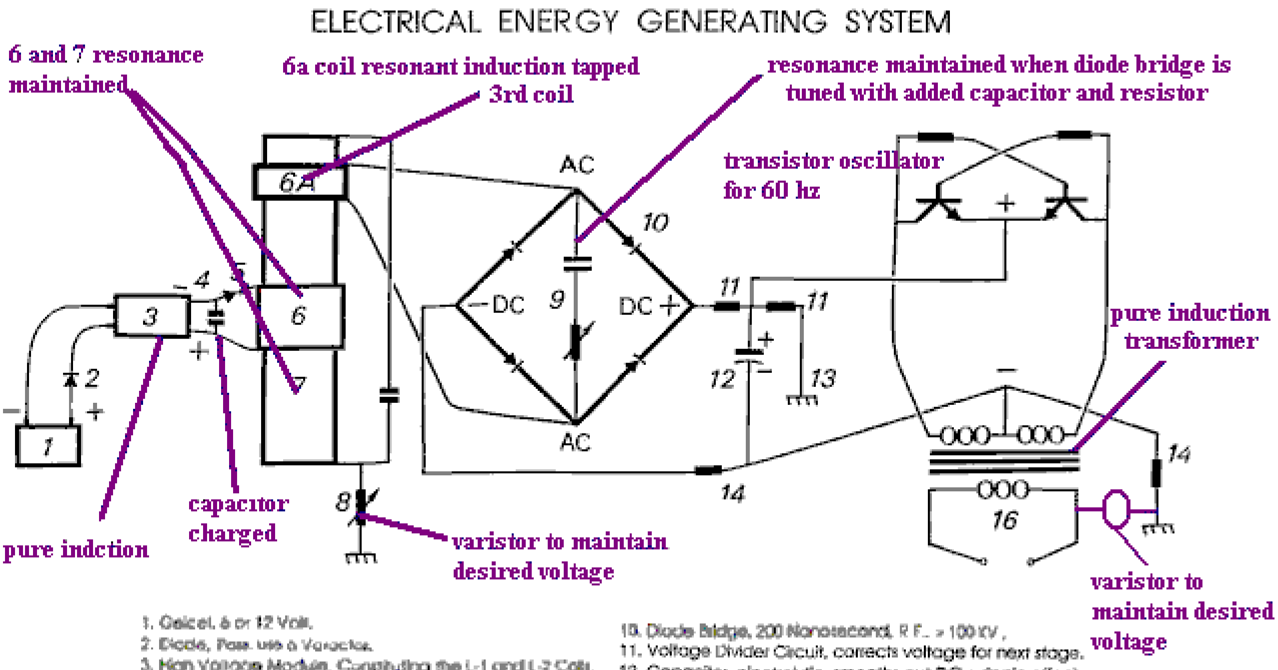

1. Gelcel, 6 or 12 Volt.
2. Diode, Poss. use a Varactor.
3. High Voltage Module, Constituting the L-1 and L-2 Coils.
4. Capacitor, TDK 10.9 Pf., 30 KV
5. Spark Gap, Small Engine Spark Plug, Gap = .0025 in.
6. Induction Transfer Coil L-3., 6A = L-5
7. Induction Receiving Coil L-4.
8. Voltage Control Shunt.
9. Frequency Adjustor, prevents derating by Diode Bridge
10. Diode Bridge, 200 Nanosecond, R.F., > 100 KV,
11. Voltage Divider Circuit, corrects voltage for next stage.
12. Capacitor, electrolytic, smooths out DC + ripple effect.
13. Earth Ground.
14. Voltage Divider Circuit, corrects voltage for Transformer
15. Inverter Circuit, DC + in and 60 CPS to Transformer
16. Output from Transformer to Load (Work).

20 Dec., 1994

The information shown above, relates to the small Suitcase Model demonstrated at the 1996 Tesla Convention, presented as Don Smiths' Workshop. This unit was a very primitive version and newer versions have atomic batteries and power output ranges of Gigawatts. The battery requirement is low level and is no more harmful than the radium on the dial of a clock. Commercial units of Boulder Dam size are currently being installed at several major locations throughout the world. For reasons of Don's personal security and contract obligations, the information which he has shared here, is incomplete.

Booker, H.G., " Energy in Electromagnetism ", Institute of Electrical Engineers, Peter Peregrinus, Ltd., 1982, I.S.B.N. 0-906048-59-1

Bleany and Bleany, " Electricity and Magnetism ", Oxford University Press, 1991, I.S.B.N. 0-19-851172-8

Chapman and Bartels, " Geomagnetism ", 3 vol., Oxford University Press, 1940

Hammond, P., " Energy Methods in Electromagnetism ", Oxford University Press, 1986, I.S.B.N. 0-19-859368-6

Matsushita and Campbell, " Physics of Geomagneic Phenomena ", several vols., National Center for Atmospheric Research, Boulder, Colorado, Academic press, 1967

Nashida, A., " Geomagnetic Diagnosis of the Magnetosphere ", University of Tokyo, Springer-Verlag, 1978, I.S.B.N. 0-387-08297-2

Rieger, Von Heinz., " Der Magnetisch Kreis ", Siemens A.G., Berlin and Munchen, Germany, I.S.B.N. 3-8009-4719-6

Rokityansky, I.I., " Geoelectrical investigation of the Earth's Crust and Mantel ", Institute of Geophysics, Kiev, U.S.S.R., Springer-Verlag, 1982, I.S.B.N. 3-540-10630-8

Vigoureux, P., " Units and Standards for Electromagnetics ", National Physical Laboratory, 1971, Springer-Verlag, I.S.B.N. 0-387-91077-8

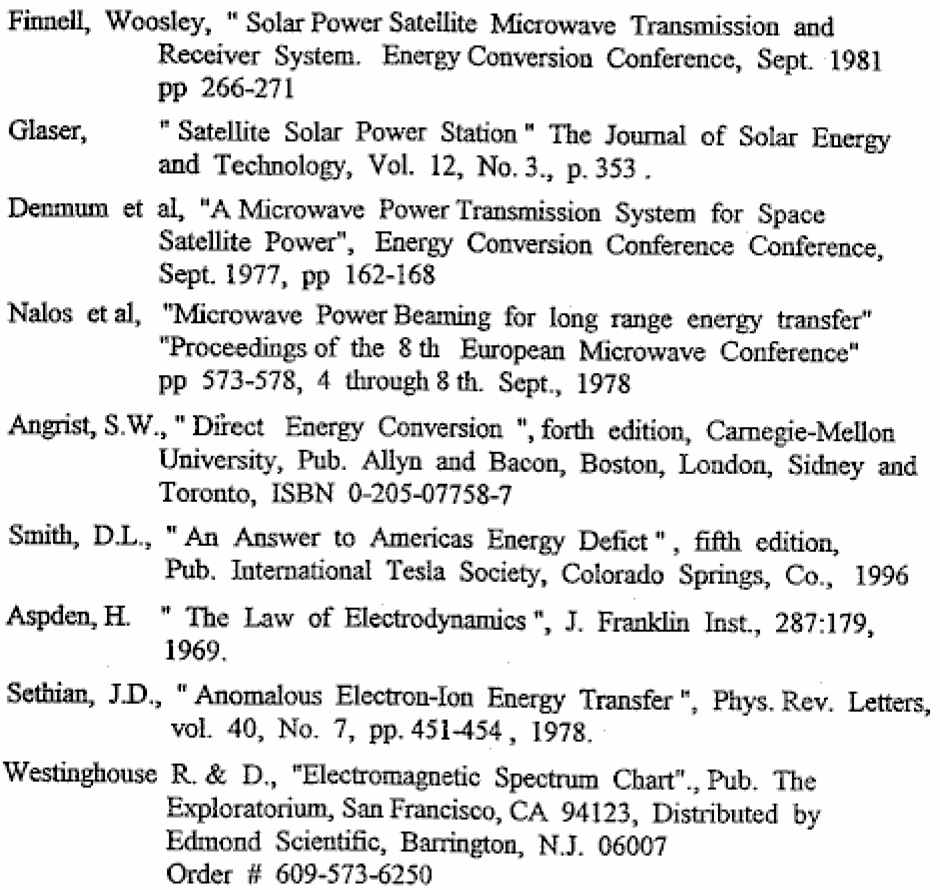

Finnell, Woosley, " Solar Power Satellite Microwave Transmission and Receiver System. Energy Conversion Conference, Sept. 1981 pp 266-271

Glaser, " Satellite Solar Power Station " The Journal of Solar Energy and Technology, Vol. 12, No. 3., p. 353 .

Denmum et al, "A Microwave Power Transmission System for Space Satellite Power", Energy Conversion Conference Conference, Sept. 1977, pp 162-168

Nalos et al, "Microwave Power Beaming for long range energy transfer" "Proceedings of the 8 th European Microwave Conference" pp 573-578, 4 through 8 th. Sept., 1978

Angrist, S.W., " Direct Energy Conversion ", forth edition, Carnegie-Mellon University, Pub. Allyn and Bacon, Boston, London, Sidney and Toronto, ISBN 0-205-07758-7

Smith, D.L., " An Answer to Americas Energy Defict " , fifth edition, Pub. International Tesla Society, Colorado Springs, Co., 1996

Aspden, H. " The Law of Electrodynamics ", J. Franklin Inst., 287:179, 1969.

Sethian, J.D., " Anomalous Electron-Ion Energy Transfer ", Phys. Rev. Letters, vol. 40, No. 7, pp. 451-454 , 1978.

Westinghouse R. & D., "Electromagnetic Spectrum Chart"., Pub. The Exploratorium, San Francisco, CA 94123, Distributed by Edmond Scientific, Barrington, N.J. 06007 Order # 609-573-6250

****

PJK: I am most definitely not an expert in this area. However, it is probably worth mentioning some of the main points which Don Smith appears to be making. There are some very important points being made here, and grasping these may make a considerable difference to our ability to tap into the excess energy available in our local environment. There are four points worth mentioning:

1. Voltage
2. Frequency
3. Magnetic / Electric relationship
4. Resonance

1. Voltage. We tend to view things with an 'intuitive' view, generally based on fairly simple concepts. For example, we automatically think that it is more difficult to pick up a heavy object than to pick up a light one. How much more difficult? Well, if it is twice as heavy, it would probably be about twice as much effort to pick it up. This view has developed from our experience of things which we have done in the past, rather than on any mathematical calculation or formula.

Well, how about pulsing an electronic system with a voltage? How would the output power of a system be affected by increasing the voltage? Our initial 'off-the cuff' reaction might be that the power output might be increased a bit, but then hold on… we've just remembered that Watts = Volts x Amps, so if you double the voltage, then you would double the power in watts. So we might settle for the notion that if we doubled the voltage then we could double the output power. If we thought that, then we would be wrong.

Don Smith points out that as capacitors and coils store energy, if they are involved in the circuit, then the output power is proportional to the **square** of the voltage used. Double the voltage, and the output power is four times greater. Use three times the voltage and the output power is nine times greater. Use ten times the voltage and the output power is one hundred times greater !

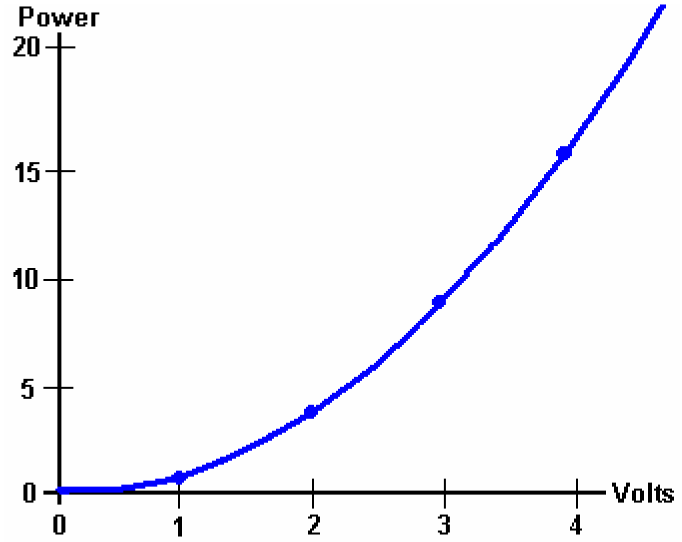

Don says that the energy stored, multiplied by the cycles per second, is the energy being pumped by the system. Capacitors and inductors (coils) temporarily store electrons, and their performance is given by:

Capacitor formula: $\mathbf{W = 0.5 \times C \times V^2 \times Hz}$ where:

W is the energy in Joules (Joules = Volts x Amps x seconds)
C is the capacitance in Farads
V is the voltage
Hz is the cycles per second

Inductor formula: $\mathbf{W = 0.5 \times L \times A^2 \times Hz}$ where:

W is the energy in Joules
L is the inductance in henrys
A is the current in amps
Hz is the frequency in cycles per second

You will notice that where inductors (coils) are involved, then the output power goes up with the square of the current. Double the voltage **and** double the current gives four times the power output due to the increased voltage and that increased output is increased by a further four times due to the increased current, giving sixteen times the output power.

2. Frequency. You will notice from the formulas above, that the output power is directly proportional to the frequency "Hz". The frequency is the number of cycles per second (or pulses per second) applied to the circuit. This is something which is not intuitive for most people. If you double the rate of pulsing, then you double the power output. When this sinks in, you suddenly see why Nikola Tesla tended to use millions of volts and millions of pulses per second.

However, Don Smith states that when a circuit is at it's point of resonance, resistance in the circuit drops to zero and the circuit becomes effectively, a superconductor. The energy for such a system which is in resonance is:

Resonant circuit: $\mathbf{W = 0.5 \times C \times V^2 \times (Hz)^2}$ where:

W is the energy in Joules
C is the capacitance in Farads
V is the voltage
Hz is the cycles per second

If this is correct, then raising the frequency in a resonating circuit has a massive effect on the power output of the device. The question then arises: why is the mains power in Europe just fifty cycles per second and in America just sixty cycles per second? If power goes up with frequency, then why not feed households at a million cycles per second? One major reason is that it is not easy to make electric motors which can be driven with power delivered at that frequency, so a more suitable frequency is chosen in order to suit the motors in vacuum cleaners, washing machines and other household equipment.

However, if we want to extract energy from the environment, then we should go for high voltage and high frequency. Then, when high power has been extracted, if we want a low frequency suited to electric motors, we can pulse the already captured power at that low frequency.

It might be speculated that if a device is being driven with sharp pulses which have a very sharply rising leading edge, that the effective frequency of the pulsing is actually determined by the speed of that rising edge, rather than the rate at which the pulses are actually generated. For example, if pulses are being generated at, say, 50 kHz but the pulses have a leading edge which would be suited to a 200 kHz pulse train, then the device might well see the signal as a 200 kHz signal with a 25% Mark/Space ratio, the very suddenness of the applied voltage having a magnetic shocking effect equivalent to a 200 kHz pulse train.

3. Magnetic / Electric relationship. Don states that the reason why our present power systems are so inefficient is because we concentrate on the electric component of electromagnetism. These systems are always COP<1 as electricity is the 'losses' of electromagnetic power. Instead, if you concentrate on the magnetic component, then there is no limit on the electric power which can be extracted from that magnetic component. Contrary to what you might expect, if you install a pick-up system which extracts electrical energy from the magnetic component, you can install any number of other identical pick-ups, each of which extract the same amount of electrical energy from the magnetic input, **without** loading the magnetic wave in any way. Unlimited electrical output for the 'cost' of creating a single magnetic effect.

The magnetic effect which we want to create is a ripple in the zero-point energy field, and ideally, we want to create that effect while using very little power. Creating a dipole with a battery which has a Plus and a Minus terminal or a magnet which has North and South poles, is an easy way to do create an electromagnetic imbalance in the local environment. Pulsing a coil is probably an even better way as the magnetic field reverses rapidly if it is an air-core coil, such as a Tesla Coil. Using a ferromagnetic core to the coil can create a problem as iron can't reverse it's magnetic alignment very rapidly, and ideally, you want pulsing which is at least a thousand times faster than iron can handle.

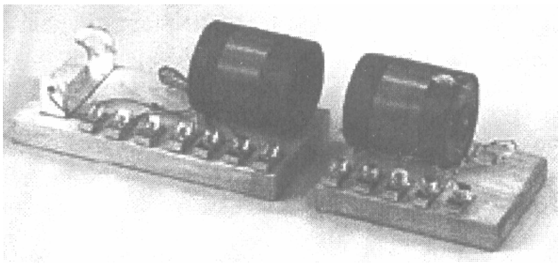

Don draws attention to the "Transmitter / Receiver" educational kit "Resonant Circuits #10-416" which was supplied by The Science Source, Maine. This kit demonstrated the generation of resonant energy and it's collection with a receiver circuit. However, if several receiver circuits are used, then the energy collected is increased several times without any increase in the transmitted energy. This is similar to a radio transmitter where hundreds of thousands of radio receivers can receive the transmitted signal without loading the transmitter in any way. In Don's day, this kit was driven by a 1.5 volt battery and lit a 60-watt bulb which was supplied. Not surprisingly, that kit has been discontinued and a trivial kit substituted.

If you get the Science Source educational kit, then there are some details which you need to watch out for. The unit has two very nice quality plastic bases and two very neatly wound coils each of 60 turns of 0.47 mm diameter enamelled copper wire on clear acrylic tubes 57 mm (2.25") in diameter. The winding covers a 28 mm section of the tube. The layout of the transmitter and receiver modules does not match the accompanying instruction sheet and so considerable care needs to be taken when wiring up any of their circuits. The circuit diagrams are not shown, just a wiring diagram, which is not great from an educational point of view. The one relevant circuit is:

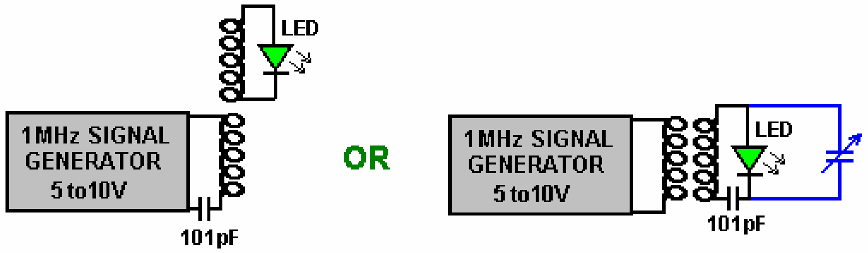

Before you buy the kit, it is not mentioned that in order to use it, you now need a signal generator capable of producing a 10-volt signal at 1 MHz. The coil has a DC resistance of just 1.9 ohms but at a 1 MHz resonant frequency, the necessary drive power is quite low.

A variable capacitor is mounted on the receiver coil tube, but the one in my kit made absolutely no difference to the frequency tuning, nor was my capacitance meter able to determine any capacitance value for it at all, even though it had no trouble at all in measuring the 101 pF capacitor which was exactly the capacitance printed on it. For that reason, it is shown in blue in the circuit diagram above. Disconnecting it made no difference whatsoever.

In this particular kit, standard screw connectors have had one screw replaced with an Allen key headed bolt which has a head large enough to allow finger tightening. Unfortunately, those bolts have a square cut tip where a domed tip is essential if small diameter wires are to be clamped securely. If you get the kit, then I suggest that you replace the connectors with a standard electrical screw connector strip.

In tests, the LED lights up when the coils are aligned and within about 100 mm of each other, or if they are close together side by side. This immediately makes the Hubbard device spring to mind. Hubbard has a central "electromagnetic transmitter" surrounded by a ring of "receivers" closely coupled magnetically to the transmitter, each of which will receive a copy of the energy sent by the transmitter:

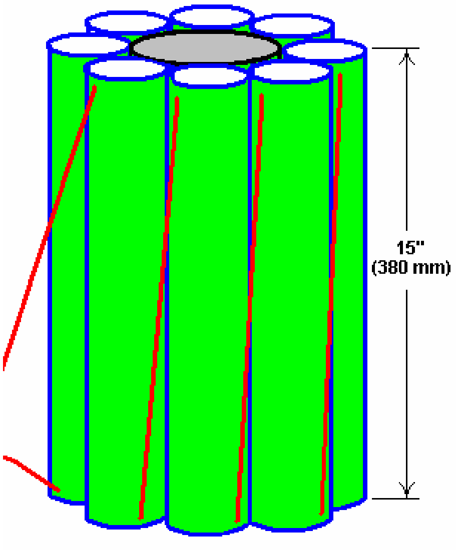

Don points to an even more clearly demonstrated occurrence of this effect in the Tesla Coil. In a typical Tesla Coil, the primary coil is much larger diameter than the inner secondary coil:

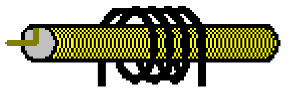

If, for example, 8,000 volts is applied to the primary coil which has four turns, then each turn would have 2,000 volts of potential. Each turn of the primary coil transfers electromagnetic flux to every single turn of the secondary winding, and the secondary coil has a very large number of turns. Massively more power is produced in the secondary coil than was used to energise the primary coil. A common mistake is to believe that a Tesla Coil can't produce serious amperage. If the primary coil is positioned in the middle of the secondary coil as shown, then the amperage generated will be as large as the voltage generated. A low power input to the primary coil can produce kilowatts of usable electrical power as described in chapter 5.

4. Resonance. An important factor in circuits aimed at tapping external energy is resonance. It can be hard to see where this comes in when it is an electronic circuit which is being considered. However, everything has it's own resonant frequency, whether it is a coil or any other electronic component. When components are connected together to form a circuit, the circuit has an overall resonant frequency. As a simple example, consider a swing:

If the swing is pushed before it reaches the highest point on the mother's side, then the push actually opposes the swinging action. The time of one full swing is the resonant frequency of the swing, and that is determined by the length of the supporting ropes holding the seat and not the weight of the child nor the power with which the child is pushed. Provided that the timing is exactly right, a very small push can get a swing moving in a substantial arc. The key factor is, matching the pulses applied to the swing, that is, to the resonant frequency of the swing. Get it right and a large movement is produced. Get it wrong, and the swing doesn't get going at all (at which point, critics would say "see, see …swings just don't work - this proves it !!"). This principle is demonstrated in the video at http://www.youtube.com/watch?v=irwK1VfoiOA.

Establishing the exact pulsing rate needed for a resonant circuit is not particularly easy, because the circuit contains coils (which have inductance, capacitance and resistance), capacitors (which have capacitance and a small amount of resistance) and resistors and wires, both of which have resistance and some capacitance. These kinds of circuit are called "LRC" circuits because "L" is the symbol used for inductance, "R" is the symbol used for resistance and "C" is the symbol used for capacitance.

Don Smith provides instructions for winding and using the type of air-core coils needed for a Tesla Coil. He says:

1. Decide a frequency and bear in mind, the economy of the size of construction selected. The factors are:

(a) Use radio frequency (above 20 kHz).
(b) Use natural frequency, i.e. match the coil wire length to the frequency - coils have both capacitance and inductance.
(c) Make the wire length either one quarter, one half of the full wavelength.
(d) Calculate the wire length in feet as follows:
    If using one quarter wavelength, then divide 247 by the frequency in MHz.
    If using one half wavelength, then divide 494 by the frequency in MHz.
    If using the full wavelength, then divide 998 by the frequency in MHz.
  For wire lengths in metres:
    If using one quarter wavelength, then divide 75.29 by the frequency in MHz.
    If using one half wavelength, then divide 150.57 by the frequency in MHz.
    If using the full wavelength, then divide 304.19 by the frequency in MHz.

2. Choose the number of turns to be used in the coil when winding it using the wire length just calculated. The number of turns will be governed by the diameter of the tube on which the coil is to be wound. Remember that the ratio of the number of turns in the "L - 1" and "L - 2" coils, controls the overall output voltage. For example, if the voltage applied the large outer coil "L - 1" is 2,400 volts and L - 1 has ten turns, then each turn of L - 1 will have 240 volts dropped across it. This 240 volts of magnetic induction transfers 240 volts of electricity to every turn of wire in the inner "L - 2" coil. If the diameter of L - 2 is small enough to have 100 turns, then the voltage produced will be 24,000 volts. If the diameter of the L - 2 former allows 500 turns, then the output voltage will be 120,000 volts.

3. Choose the length and diameter of the coils. The larger the diameter of the coil, the fewer turns can be made with the wire length and so the coil length will be less, and the output voltage will be lower.

4. For example, if 24.7 MHz is the desired output frequency, then the length of wire, in feet, would be 247 divided by 24.7 which is 10 feet of wire (3,048 mm). The coil may be wound on a standard size of PVC pipe or alternatively, it can be purchased from a supplier - typically, an amateur radio supply store.

If the voltage on each turn of L - 1 is arranged to be 24 volts and the desired output voltage 640 volts, then there needs to be 640 / 24 = 26.66 turns on L - 2, wound with the 10 feet of wire already calculated.

Note: At this point, Don's calculations go adrift and he suggests winding 30 turns on a 2-inch former. If you do that, then it will take about 16 feet of wire and the resonant point at 10-feet will be at about 19 turns, giving an output voltage of 458 volts instead of the required 640 volts, unless the number of turns on L - 1 is reduced to give more than 24 volts per turn. However, the actual required diameter of the coil former (plus one diameter of the wire) is 10 x 12 / (26.67 x 3.14159) = 1.43 inches. You can make this size of former up quite easily if you want to stay with ten turns on the L - 1 coil.

5. Connect to the start of the coil. To determine the exact resonant point on the coil, a measurement is made. Off-the-shelf multimeters are not responsive to high-frequency signals so a cheap neon is used instead. Holding one wire of the neon in one hand and running the other neon wire along the outside of the L - 2 winding, the point of brightest light is located. Then the neon is moved along that turn to find the brightest point along that turn, and when it is located, a connection is made to the winding at that exact point. L - 2 is now a resonant winding. It is possible to increase the ("Q") effectiveness of the coil by spreading the turns out a bit instead of positioning them so that each turn touches both of the adjacent turns.

6. The input power has been suggested as 2,400 volts. This can be constructed from a Jacob's ladder arrangement or any step-up voltage system. An off-the-shelf module as used with lasers is another option.

7. Construction of the L - 1 input coil has been suggested as having 10 turns. The length of the wire in this coil is not critical. If a 2-inch diameter PVC pipe was used for the L - 2 coil, then the next larger size of PVC pipe can be used for the L - 1 coil former. Cut a 10-turn length of the pipe (probably a 3-inch diameter pipe). The pipe length will depend on the diameter of the insulated wire used to make the winding. Use a good quality multimeter or a specialised LCR meter to measure the capacitance (in Farads) and the inductance (in henrys) of the L - 2 coil. Now, put a capacitor for matching L - 1 to L - 2 across the voltage input of L - 1, and a spark gap connected **in parallel** is required for the return voltage from L - 1. A trimmer capacitor for L - 1 is desirable.

8. The performance of L - 2 can be further enhanced by attaching an earth connection to the base of the coil. The maximum output voltage will be between the ends of coil L - 2 and lesser voltages can be taken off intermediate points along the coil if that is desirable.

This frequency information can be rather hard to understand in the way that Don states it. It may be easier to follow the description given by one developer who says:

I have noticed that any machine can be made a super machine just by adding a bipolar capacitor across the coil. Nothing else is needed. With the correct capacitor the coil becomes Naturally Resonant and uses very little Amperage. Each machine uses a different size capacitor. The correct capacitor size can be calculated by dividing the speed of light by the coil's wire length first to get the coil's Natural Frequency and then dividing the voltage to be used by that frequency. The result is the correct size for the capacitor. Your machine will then be very powerful even working from a 12V car battery, no other additions needed.

My coil's wire length is 497.333 meters.

299000000 m/sec / 497.333 m = 600000 Hz.

12V / 600000 = 0.00002 or 20 microfarads. A beautiful Naturally Resonant Tank circuit. You can use this with any coil for overunity!

Once we have a Naturally Resonant Coil/Capacitor combination we can bring the frequency down to 50 Hz by calculating for the Power Factor Correction:

Hz = Resistance x Farads then

50 Hz = R x 0.00002

so 50 / 0.00002 = 2500000

and R = 2500000 or 2.5 Meg Ohms.

We then place all three components in parallel and our coil should give us a 50 Hz output.

Don provides quite an amount of information on one of his devices shown here:

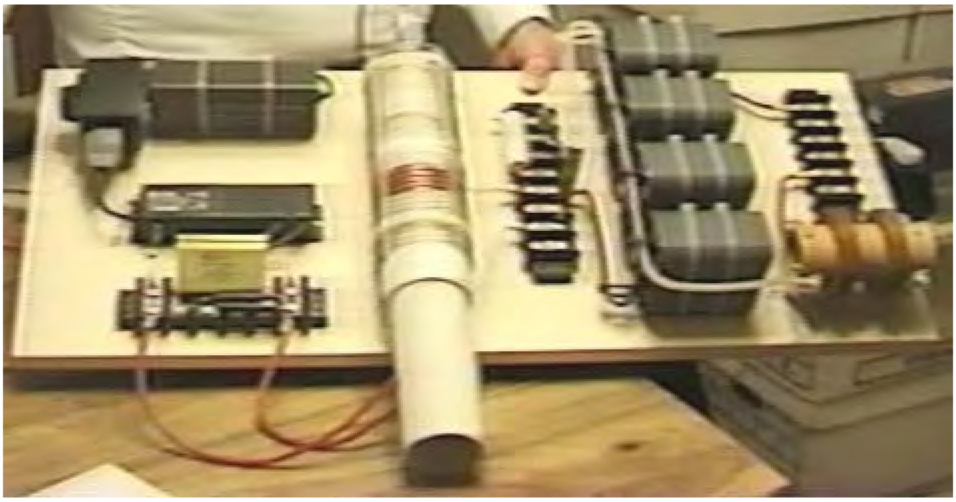

Without his description of the device, it would be difficult to understand it's construction and method of operation. As I understand it, the circuit of what is mounted on this board is as shown here:

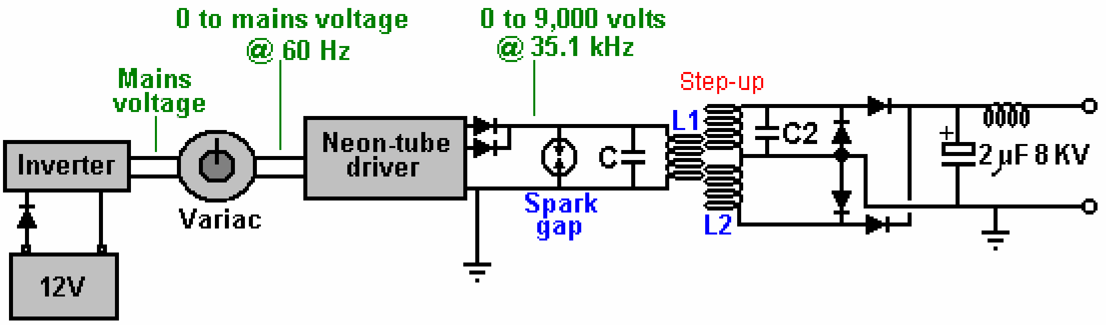

This arrangement has bothered some readers recently as they feel that the spark gap should be in series with the L1 coil, like this:

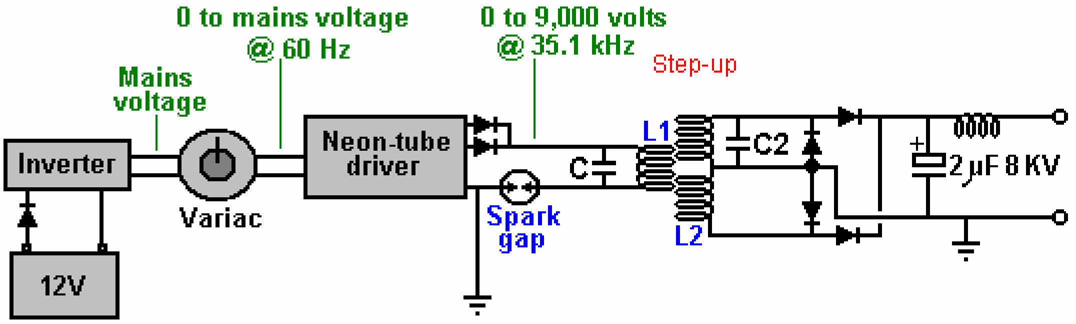

This is understandable, as there is always a tendency to think of the spark gap as being a device which is there to protect against excessive voltages rather than seeing it as an active component of the circuit, a component which is in continuous use. In 1925, Hermann Plauson was granted a patent for a whole series of methods for converting the high voltage produced by a tall aerial system into useable, standard electricity. Hermann starts off by explaining how high voltage can be converted into a convenient form and he uses a Wimshurst static electricity generator as an example of a constant source of high voltage. The output from a rectified Tesla Coil, a Wimshurst machine and a tall aerial are very much alike, and so Hermann's comments are very relevant here. He shows it like this:

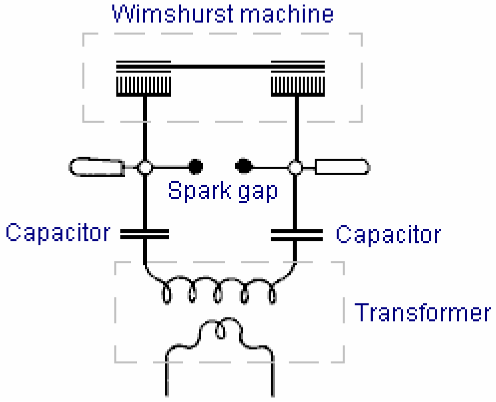

Here, the output of the Wimshurst machine is stored in two high-voltage capacitors (Leyden jars) causing a very high voltage to be created across those capacitors. When the voltage is high enough, a spark jumps across the spark gap, causing a massive surge of current through the primary winding of the transformer, which in his case is a step-down transformer as he is aimed at getting a lower output voltage. Don's circuit is almost identical:

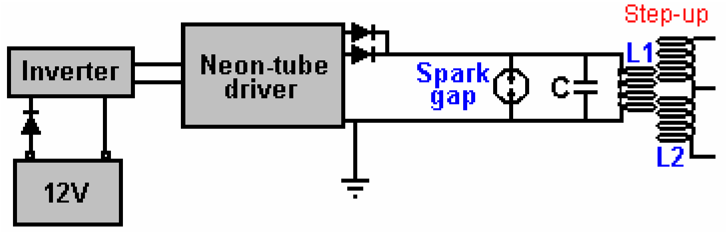

Here the high voltage comes from the battery/inverter/neon-tube driver/rectifiers, rather than from a mechanically driven Wimshurst machine. He has the same build up of voltage in a capacitor with a spark gap across the capacitor. The spark gap will fire when the capacitor voltage reaches its designed level. The only difference is in the positioning of the capacitor, which if it matched Hermann's arrangement exactly, would be like this:

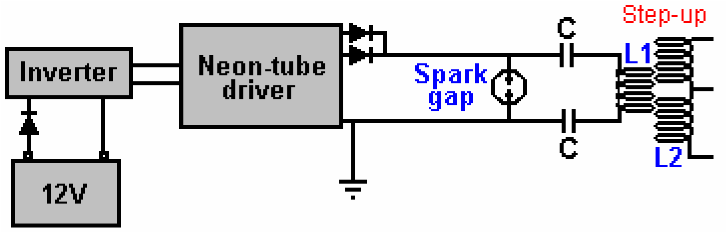

which would be a perfectly viable arrangement as far as I can see. You will remember that Tesla, who always speaks very highly of the energy released by the very sharp discharge produced by a spark, shows a high-voltage source feeding a capacitor with the energy passing through a spark gap to the primary winding of a transformer:

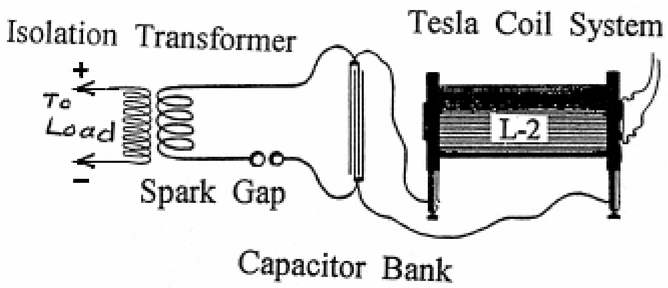

However, with Don's arrangement, it can be a little difficult to see why the capacitor is not short-circuited by the very low resistance of the few turns of thick wire forming the L1 coil. Well, it would do that if we were operating with DC, but we are most definitely not doing that as the output from the neon-tube driver circuit is pulsing 35,000 times per second. This causes the DC resistance of the L1 coil to be of almost no consequence and instead, the coil's "impedance" or "reactance" (effectively, it's AC resistance) is what counts. Actually, the capacitor and the L1 coil being connected across each other have a combined "reactance" or resistance to pulsing current at this frequency. This is where the nomograph diagram comes into play, and there is a much easier to understand version of it a few pages later on in this document. So, because of the high pulsing frequency, the L1 coil does not short-circuit the capacitor and if the pulsing frequency matches the resonant frequency of the L1 coil (or a harmonic of that frequency), then the L1 coil will actually have a very high resistance to current flow through it. This is how a crystal set radio receiver tunes in a particular radio station, broadcasting on it's own frequency.

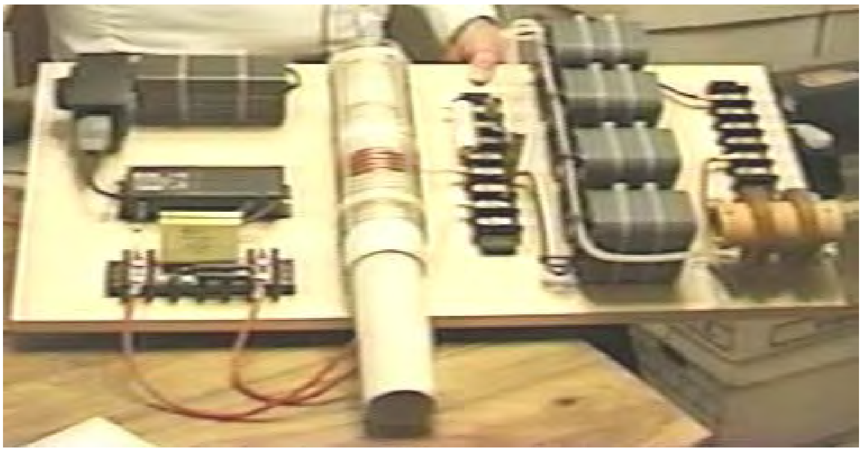

Anyway, coming back to Don's device shown in the photograph above, the electrical drive is from a 12-volt battery which is not seen in the photograph. Interestingly, Don remarks that if the length of the wires connecting the battery to the inverter are exactly one quarter of the wave length of the frequency of the oscillating magnetic field generated by the circuit, then the current induced in the battery wires will recharge the battery continuously, even if the battery is supplying power to the circuit at the same time.

The battery supplies a small current through a protecting diode, to a standard off-the-shelf "true sine-wave" inverter. An inverter is a device which produces mains-voltage Alternating Current from a DC battery. As Don wants adjustable voltage, he feeds the output from the inverter into a variable transformer called a "Variac" although this is often made as part of the neon-driver circuit to allow the brightness of the neon tube to be adjusted by the user. This arrangement produces an AC output voltage which is adjustable from zero volts up to the full mains voltage (or a little higher, though Don does not want to use a higher voltage). The use of this kind of adjustment usually makes it essential for the inverter to be a true sine-wave type. As the power requirement of the neon-tube driver circuit is so low, the inverter should not cost very much.

The neon-tube driver circuit is a standard off-the-shelf device used to drive neon tube displays for commercial establishments. The one used by Don contains an oscillator and a step-up transformer, which together produce an Alternating Current of 9,000 volts at a frequency of 35,100 Hz (sometimes written as 35.1 kHz). The term "Hz" stands for "cycles per second". Don lowers the 9,000 volts as he gets great power output at lower input voltages and the cost of the output capacitors is a significant factor. The particular neon-tube driver circuit which Don is using here, has two separate outputs out of phase with each other, so Don connects them together and uses a blocking diode in each line to prevent either of them affecting the other one. Not easily seen in the photograph, the high-voltage output line has a very small, encapsulated, Gas-Discharge Tube spark gap in it and the line is also earthed. The device looks like this:

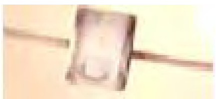

Please note that when an earth connection is mentioned in connection with Don Smith's devices, we are talking about an actual wire connection to a metal object physically buried in the ground, whether it is a long copper rod driven into the ground, or an old car radiator buried in a hole like Tariel Kapanadze uses. When Thomas Henry Moray performed his requested demonstration deep in the countryside at a location chosen by the sceptics, the light bulbs which formed his demonstration electrical load, glowed more brightly with each hammer stroke as a length of gas pipe was hammered into the ground to form his earth connection.

It should be remarked that since Don purchased his neon-tube driver module that newer designs have generally taken over completely, especially in Europe, and these designs have built in “earth-leakage current” protection which instantly disables the circuit if any current is detected leaking to ground. This feature makes the unit completely unsuitable for use in a Don Smith circuit because there, the transfer of current to the ground is wholly intentional and vital for the operation of the circuit.

The output of the neon-tube driver circuit is used to drive the primary "L1" winding of a Tesla Coil style transformer. This looks ever so simple and straightforward, but there are some subtle details which need to be considered.

The operating frequency of 35.1 kHz is set and maintained by the neon-tube driver circuitry, and so, in theory, we do not have to do any direct tuning ourselves. However, we want the resonant frequency of the L1 coil and the capacitor across it to match the neon-driver circuit frequency. The frequency of the "L1" coil winding will induce exactly the same frequency in the "L2" secondary winding. However, we need to pay special attention to the ratio of the wire lengths of the two coil windings as we want these two windings to resonate together. A rule of thumb followed by most Tesla Coil builders is to have the same weight of copper in the L1 and L2 coils, which means that the wire of the L1 coil is usually much thicker than the wire of the L2 coil. If the L1 coil is to be one quarter of the length of the L2 coil, then we would expect the cross-sectional area of the L1 coil to be four times that of the wire of the L2 coil and so the wire should have twice the diameter (as the area is proportional to the square of the radius, and the square of two is four).

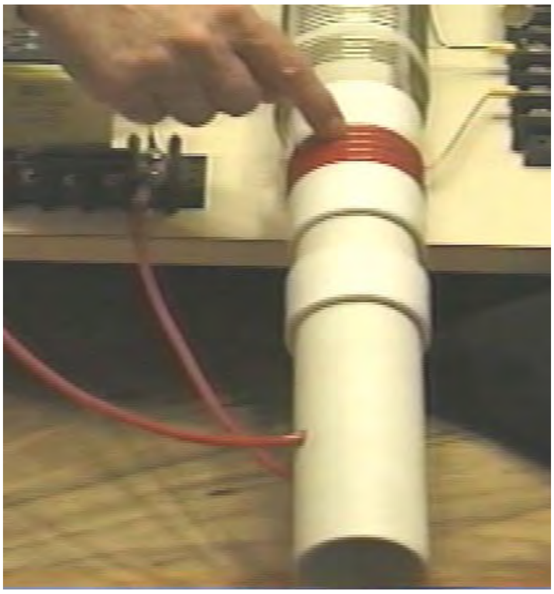

Don uses a white plastic tube as the former for his "L1" primary coil winding. As you can see here, the wire is fed into the former, leaving sufficient clearance to allow the former to slide all the way into the outer coil. The wire is fed up inside the pipe and out through another hole to allow the coil turns to be made on the outside of the pipe. There appear to be five turns, but Don does not always go for a complete number of turns, so it might be 4.3 turns or some other value. The key point here is that the length of wire in the "L1" coil turns should be exactly one quarter of the length of wire in the "L2" coil turns.

The "L2" coil used here is a commercial 3-inch diameter unit from Barker & Williamson, constructed from uninsulated, solid, single-strand "tinned" copper wire (how to make home-build versions is shown later on). Don has taken this coil and unwound four turns in the middle of the coil in order to make a centre-tap. He then measured the exact length of wire in the remaining section and made the length of the "L1" coil turns to be exactly one quarter of that length. The wire used for the "L1" coil looks like Don's favourite "Jumbo Speaker Wire" which is a very flexible wire with a very large number of extremely fine uninsulated copper wires inside it.

You will notice that Don has placed a plastic collar on each side of the winding, matching the thickness of the wire, in order to create a secure sliding operation inside the outer "L2" coil, and the additional plastic collars positioned further along the pipe provide further support for the inner coil. This sliding action allows the primary coil "L1" to be positioned at any point along the length of the "L2" secondary coil, and that has a marked tuning effect on the operation of the system. The outer "L2" coil does not have any kind of tube support but instead, the coil shape is maintained by the stiffness of the solid wire plus four slotted strips. This style of construction produces the highest possible coil performance at radio frequencies. With a Tesla Coil, it is most unusual to have the L1 coil of smaller diameter than the L2 coil.

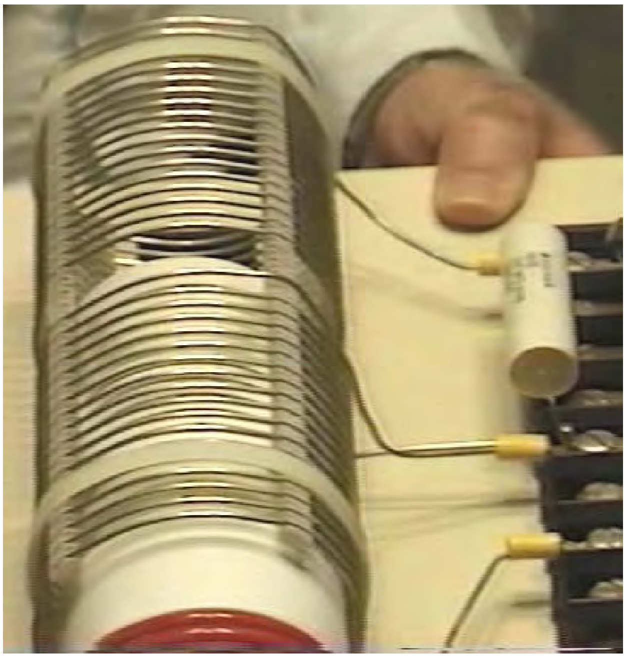

The "L2" coil has two separate sections, each of seventeen turns. One point to note is the turns are spaced apart using slotted strips to support the wires and maintain an accurate spacing between adjacent turns. It must be remembered that spacing coil turns apart like this alters the characteristics of the coil, increasing it's "capacitance" factor substantially. Every coil has resistance, inductance and capacitance, but the form of the coil construction has a major effect on the ratio of these three characteristics. The coil assembly is held in position on the base board by two off-white plastic cable ties. The nearer half of the coil is effectively connected across the further half as shown in the circuit diagram above.

One point which Don stresses, is that the length of the wire in the "L1" coil and the length of wire in the "L2" coil, must be an exact even division or multiple of each other (in this case, the "L2" wire length in each half of the "L2" coil is exactly four times as long as the "L1" coil wire length). This is likely to cause the "L1" coil to have part of a turn, due to the different coil diameters. For example, if the length of the "L2" coil wire is 160 inches and "L1" is to be one quarter of that length, namely, 40 inches. Then, if the "L1" coil has an effective diameter of 2.25 inches, (allowing for the thickness of the wire when wound on a 2-inch diameter former), then the "L1" coil would have 5.65 (or 5 and 2/3) turns which causes the finishing turn of "L2" to be 240 degrees further around the coil former than the start of the first turn - that is, five full turns plus two thirds of the sixth turn.

The L1 / L2 coil arrangement is a Tesla Coil. The positioning of the "L1" coil along the length of the "L2" coil, adjusts the voltage to current ratio produced by the coil. When the "L1" coil is near the middle of the "L2" coil, then the amplified voltage and amplified current are roughly the same. The exact wire ratio of these two coils gives them an almost automatic tuning with each other, and the exact resonance between them can be achieved by the positioning of the "L1" coil along the length of the "L2" coil. While this is a perfectly good way of adjusting the circuit, in the build shown in the photograph, Don has opted to get the exact tuning by connecting a capacitor across "L1" as marked as "C" in the circuit diagram. Don found that the appropriate capacitor value was around the 0.1 microfarad (100 nF) mark. It must be remembered that the voltage across "L1" is very high, so if a capacitor is used in that position it will need a voltage rating of at least 9,000 volts. Don remarks that the actual capacitors seen in the photograph of this prototype are rated at fifteen thousand volts, and were custom made for him using a "self-healing" style of construction. As has already been remarked, this capacitor is an optional component. Don also opted to connect a small capacitor across the "L2" coil, also for fine-tuning of the circuit, and that component is optional and so is not shown on the circuit diagram. As the two halves of the "L2" coil are effectively connected across each other, it is only necessary to have one fine-tuning capacitor. However, Don stresses that the "height" length of the coil (when standing vertically) controls the voltage produced while the coil "width" (the diameter of the turns) controls the current produced.

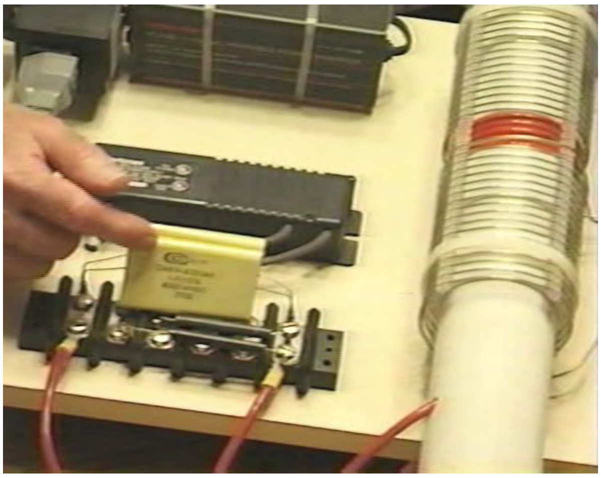

The exact wire length ratio of the turns in the "L1" and "L2" coils gives them an almost automatic synchronous tuning with each other, and the exact resonance between them can be achieved by the positioning of the "L1" coil along the length of the "L2" coil. While this is a perfectly good way of adjusting the circuit, in the 1994 build shown in the photograph, Don has opted to get the exact tuning by connecting a capacitor across "L1" as marked as "**C**" in the circuit diagram. Don found that the appropriate capacitor value for his particular coil build, was about 0.1 microfarad (100 nF) and so he connected two 47 nF high-voltage capacitors in parallel to get the value which he wanted. It must be remembered that the voltage across "L1" is very high, so a capacitor used in that position needs a voltage rating of at least 9,000 volts. Don remarks that the actual capacitors seen in the photograph of this prototype are rated at fifteen thousand volts, and were custom made for him using a "self-healing" style of construction.

Don has also connected a small capacitor across the "L2" coil, and that optional component is marked as "C2" in the circuit diagram and the value used by Don happened to be a single 47nF, high-voltage capacitor. As the two halves of the "L2" coil are effectively connected across each other, it is only necessary to have one capacitor for "L2":

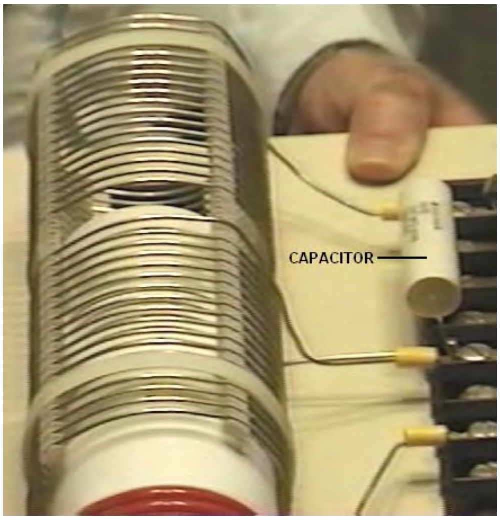

There are various ways of dealing with the output from the "L2" coil in order to get large amounts of conventional electrical power out of the device. The method shown here uses the four very large capacitors seen in the photograph. These have an 8,000 or 9,000 volt rating and a large capacity and they are used to store the circuit power as DC prior to use in the load equipment. This is achieved by feeding the capacitor bank through a diode which is rated for both high voltage and high current, as Don states that the device produces 8,000 volts at 20 amps, in which case, this rectifying diode has to be able to handle that level of power, both at start-up when the capacitor bank is fully discharged and "L2" is producing 8,000 volts, and when the full load of 20 amps is being drawn.

This capacitor bank is fed through a diode which is rated for both high voltage and high current, as Don states that the device produces 8,000 volts at 20 amps, in which case, this rectifying diode has to be able to handle that level of power, both at start-up when the capacitor bank is fully discharged and "L2" is producing 8,000 volts, and when the full load of 20 amps is being drawn. The actual diodes used by Don happen to be rated at 25 KV but that is a far greater rating than is actually needed.

In passing, it might be remarked that the average home user will not have an electrical requirement of anything remotely like as large as this, seeing that 10 kW is more than most people use on a continuous basis, while 8 KV at 20 A is a power of 160 kilowatts. As the neon-tube driver circuit can put out 9,000 volts and since the L1 / L2 coil system is a step-up transformer, if the voltage fed to the capacitor bank is to be kept down to 8,000 volts, then the Variac adjustment must be used to reduce the voltage fed to the neon-tube driver circuit, in order to lower the voltage fed to the L1 / L2 coil pair, typically, to 3,000 volts.

A very astute and knowledgeable member of the EVGRAY Yahoo EVGRAY forum whose ID is "silverhealtheu" has recently pointed out that Don Smith says quite freely that he does not disclose all of the details of his designs, and it is his opinion that a major item which has not been disclosed is that the diodes in the circuit diagrams shown here are the wrong way round and that Don operates his voltages in reverse to the conventional way. In fact, the circuit diagram should be:

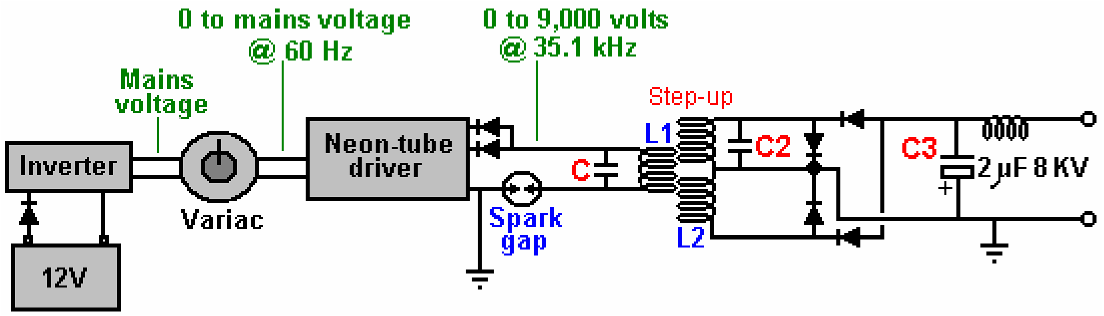

He comments: "the diodes leaving the Neon-tube Driver may need to be reversed as we want to collect the negative polarity. The spark gap will then operate on ambient inversion and the spark will look and sound totally different with a much faster crack and producing very little heat and even becoming covered in frost is possible.

The Variac should be raised up just enough to get a spark going then backed off slightly. Any higher voltage is liable to make the Neon-tube Driver think that it has a short-circuit condition, and the new electronic designs will then shut down automatically and fail to operate at all if this method is not followed.

When running, C, L1 and L2 operate somewhere up in the Radio Frequency band because the Neon-tube Driver only acts as a tank-circuit exciter. The large collection capacitor C3, should fill inverted to earth polarity as shown above. The load will then be pulling electrons from the earth as the cap is REFILLED back to ZERO rather than the joules in the capacitor being depleted.

Also remember that the Back-EMF systems of John Bedini and others, create a small positive pulse but they collect a super large NEGATIVE polarity spike which shoots off the bottom of an oscilloscope display. This is what we want, plenty of this stored in capacitors, and then let the ambient background energy supply the current when it makes the correction."

This is **a very important point** and it may well make a really major difference to the performance of a device of this nature.

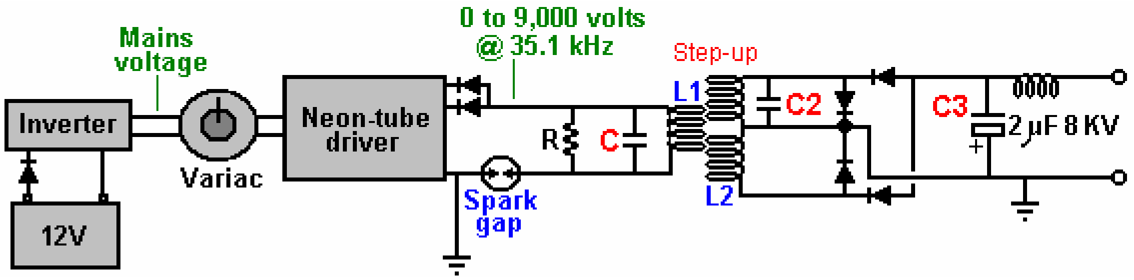

One reader has drawn attention to the fact that Don's main document indicates that there should be a resistor "R" across the L1 coil as well as the capacitor "C" and he suggests that the circuit should actually be as shown above, considering what Don said earlier about his "suitcase" design. Another reader points out that the wire in the output choke shown in the photograph below appears to be wound with wire that is far too small diameter to carry the currents mentioned by Don. It seems likely that a choke is not needed in that position except to suppress possible radio frequency transmissions from the circuit, but a more powerful choke can easily be wound using larger diameter wire.

When the circuit is running, the storage capacitor bank behaves like an 8,000 volt battery which never runs down and which can supply 20 amps of current for as long as you want. The circuitry for producing a 220 volt 50 Hz AC output or a 110 volt 60 Hz AC output from the storage capacitors is just standard electronics. In passing, one option for charging the battery is to use the magnetic field caused by drawing mains-frequency current pulses through the output "choke" coil, shown here:

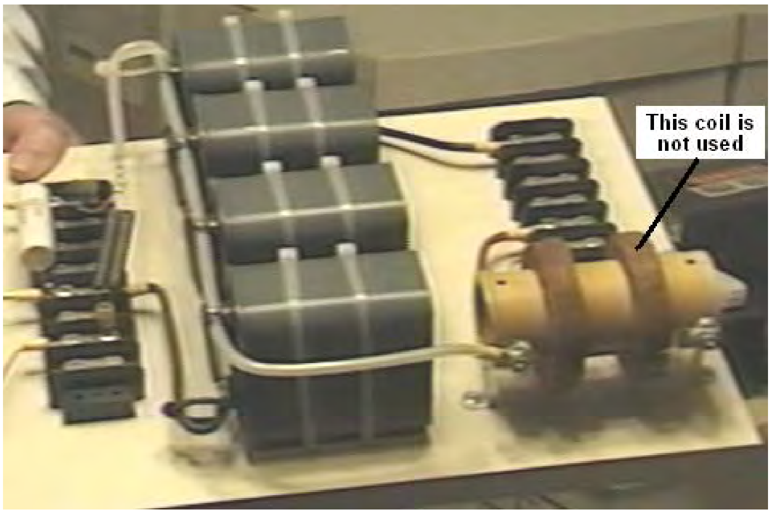

The output current flows through the left hand winding on the brown cylindrical former, and when the photograph was taken, the right-hand winding was no longer in use. Previously, it had been used to provide charging power to the battery by rectifying the electrical power in the coil, caused by the fluctuating magnetic field caused by the pulsing current flowing through the left hand winding, as shown here:

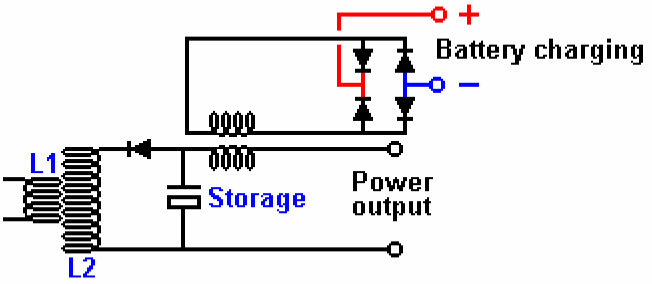

The DC output produced by the four diodes was then used to charge the driving battery, and the power level produced is substantially greater than the minor current drain from the battery. Consequently, it is a sensible precaution to pass this current to the battery via a circuit which prevents the battery voltage rising higher than it should. A simple voltage level sensor can be used to switch off the charging when the battery has reached its optimum level. Other batteries can also be charged if that is wanted. Simple circuitry of the type shown in chapter 12 can be used for controlling and limiting the charging process. The components on Don's board are laid out like this:

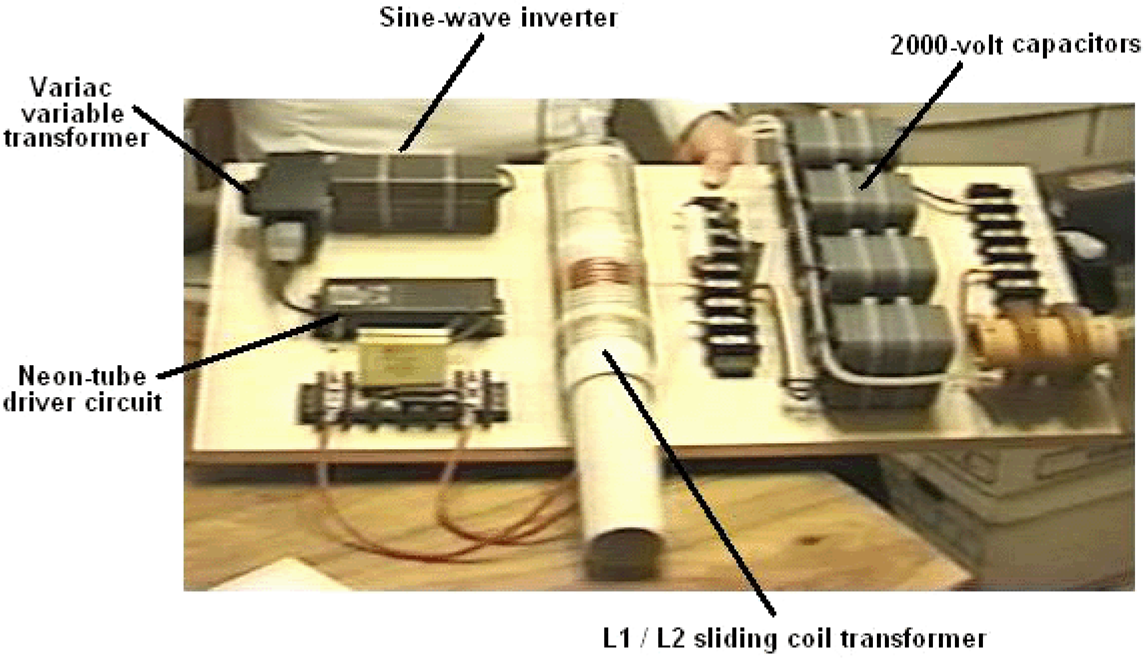

Don draws attention to the fact that the cables used to connect the output of "L2" to the output of the board, connecting the storage capacitors on the way, are very high-voltage rated cables with special multiple coverings to ensure that the cables will remain sound over an indefinite period. It should be remarked at this point, that the outer 3" diameter coil used by Don, is not wound on a former, but in order to get higher performance at high frequencies, the turns are supported with four separate strips physically attached to the turns - the technique described later in this document as being an excellent way for home construction of such coils.

Please bear in mind that the voltages here and their associated power levels are literally lethal and perfectly capable of killing anyone who handles the device carelessly when it is powered up. When a replication of this device is ready for routine use, it must be encased so that none of the high-voltage connections can be touched by anyone. This is not a suggestion, but it is a mandatory requirement, despite the fact that the components shown in the photographs are laid out in what would be a most dangerous fashion were the circuit to be powered up as it stands. Under no circumstances, construct and test this circuit unless you are already experienced in the use of high-voltage circuits or can be supervised by somebody who is experienced in this field. This is a "one hand in the pocket at all times" type of circuit and it needs to be treated with great care and respect at all times, so be sensible.

The remainder of the circuit is not mounted on the board, possibly because there are various ways in which the required end result can be achieved. The one suggested here is perhaps the most simple solution:

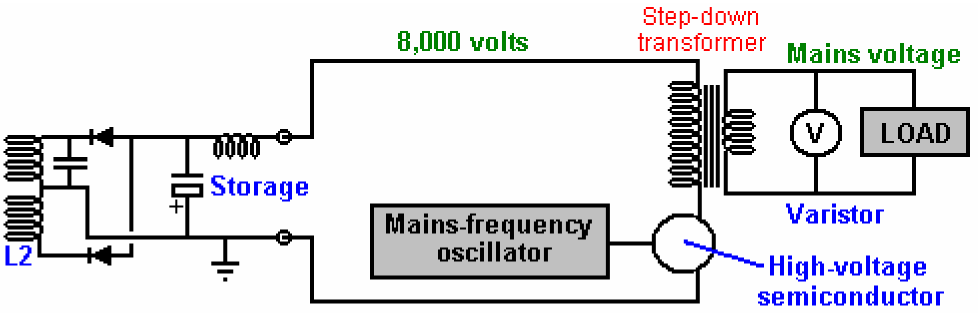

The voltage has to be dropped, so an iron-cored mains-frequency step-down transformer is used to do this. To get the frequency to the standard mains frequency for the country in which the device is to be used, an oscillator is used to generate that particular mains frequency. The oscillator output is used to drive a suitable high-voltage semiconductor device, be it an FET transistor, an IGBT device, or whatever. This device has to switch the working current at 8,000 volts, though admittedly, that will be a current which will be at least thirty six times lower than the final output current, due to the higher voltage on the primary winding of the transformer. The available power will be limited by the current handling capabilities of this output transformer which needs to be very large and expensive.

As the circuit is capable of picking up additional magnetic pulses, such as those generated by other equipment, nearby lightning strikes, etc. an electronic component called a "varistor" marked "V" in the diagram, is connected across the load. This device acts as a voltage spike suppressor as it short circuits any voltage above its design voltage, protecting the load from power surges.

Don also explains an even more simple version of the circuit as shown here:

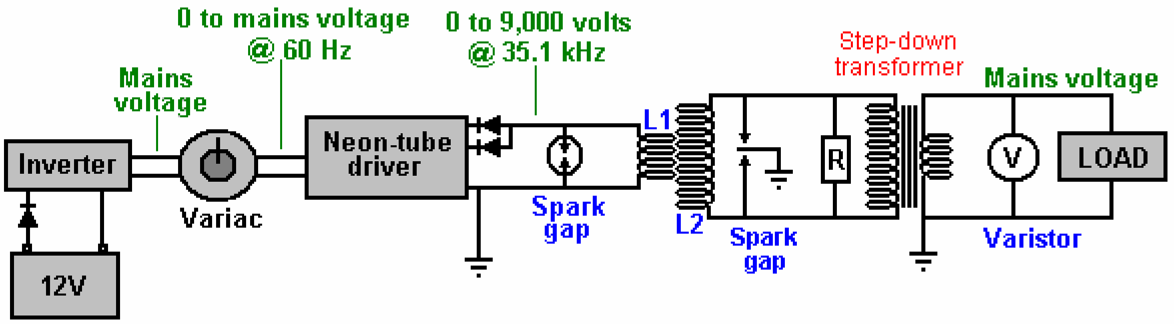

This simplified circuit avoids the need for expensive capacitors and the constraints of their voltage ratings, and the need for electronic control of the output frequency. The wire length in the turns of coil "L2" still needs to be exactly four times the wire length of the turns in coil "L1", but there is only one component which needs to be introduced, and that is the resistor "**R**" placed across the primary winding of the step-down isolation transformer. This transformer is a laminated iron-core type, suitable for the low mains frequency, but the output from "L2" is at much higher frequency. It is possible to pull the frequency down to suit the step-down transformer by connecting the correct value of resistor "R" across the output transformer (or a coil and resistor, or a coil and a capacitor). The value of resistor needed can be predicted from the American Radio Relay League graph (shown as Fig.44 in Don's pdf document which can be downloaded using http://www.free-energy-info.com/Smith.pdf). The sixth edition of the Howard Sams book "Handbook of Electronics Tables and Formulas" (ISBN-10: 0672224690 or ISBN-13**:** 978-0672224690) has a table which goes down to 1 kHz and so does not need to be extended to reach the frequencies used here. The correct resistor value could also be found by experimentation. You will notice that an earthed dual spark gap has been placed across "L2" in order to make sure that the voltage levels always stay within the design range.

Don also explains an even more simple version which does not need a Variac, high voltage capacitors or high voltage diodes. Here, a DC output is accepted which means that high-frequency step-down transformer operation can be used. This calls for an air-core transformer which you would wind yourself from heavy duty wire. Mains loads would then be powered by using a standard off-the-shelf inverter. In this version, it is of course, necessary to make the "L1" turns wire length exactly one quarter of the "L2" turns wire length in order to make the two coils resonate together. The operating frequency of each of these coils is imposed on them by the output frequency of the neon-tube driver circuit. That frequency is maintained throughout the entire circuit until it is rectified by the four diodes feeding the low-voltage storage capacitor. The target output voltage will be either just over 12 volts or just over 24 volts, depending on the voltage rating of the inverter which is to be driven by the system. The circuit diagram is:

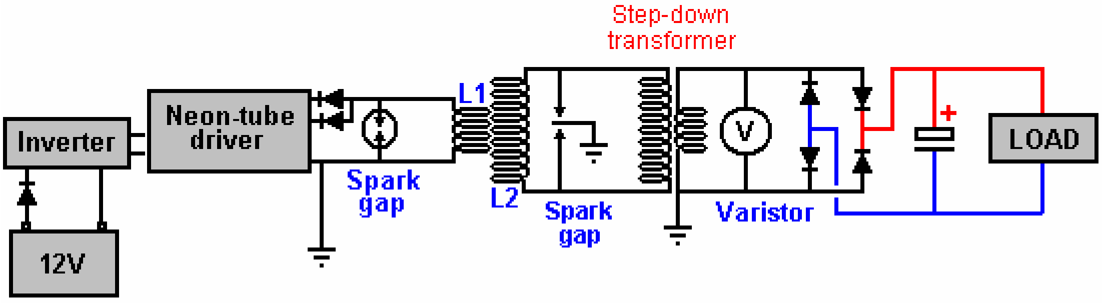

As many people will find the nomograph chart in Don's pdf document very difficult to understand and use, here is an easier version:

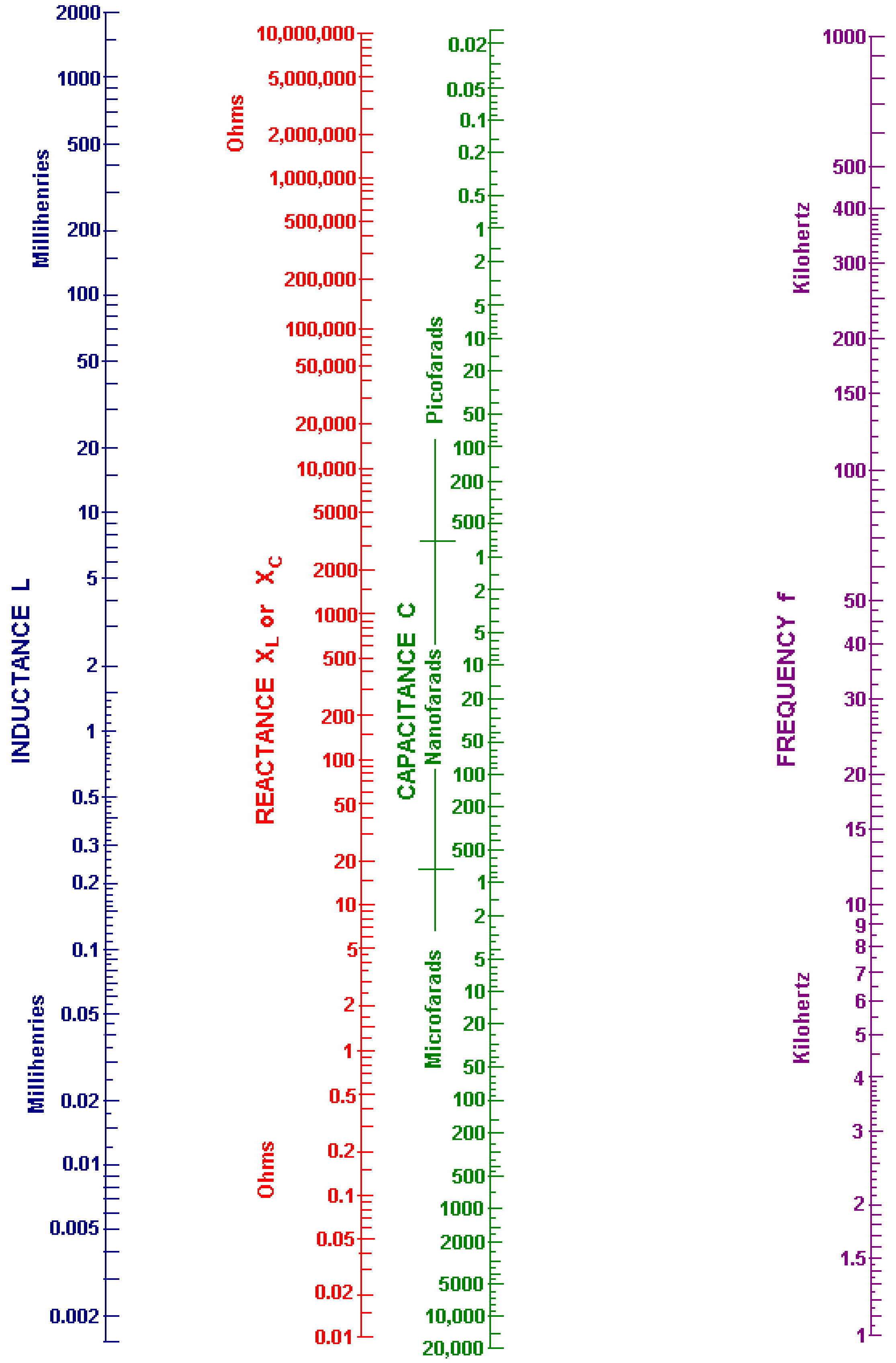

The objective here is to determine the "reactance" or 'AC resistance' in ohms and the way to do that is as follows:

Suppose that your neon-tube driver is running at 30 kHz and you are using a capacitor of 100 nF (which is the same as 0.1 microfarad) and you want to know what is the AC resistance of your capacitor is at that frequency. Also, what coil inductance would have that same AC resistance. Then the procedure for finding that out is as follows:

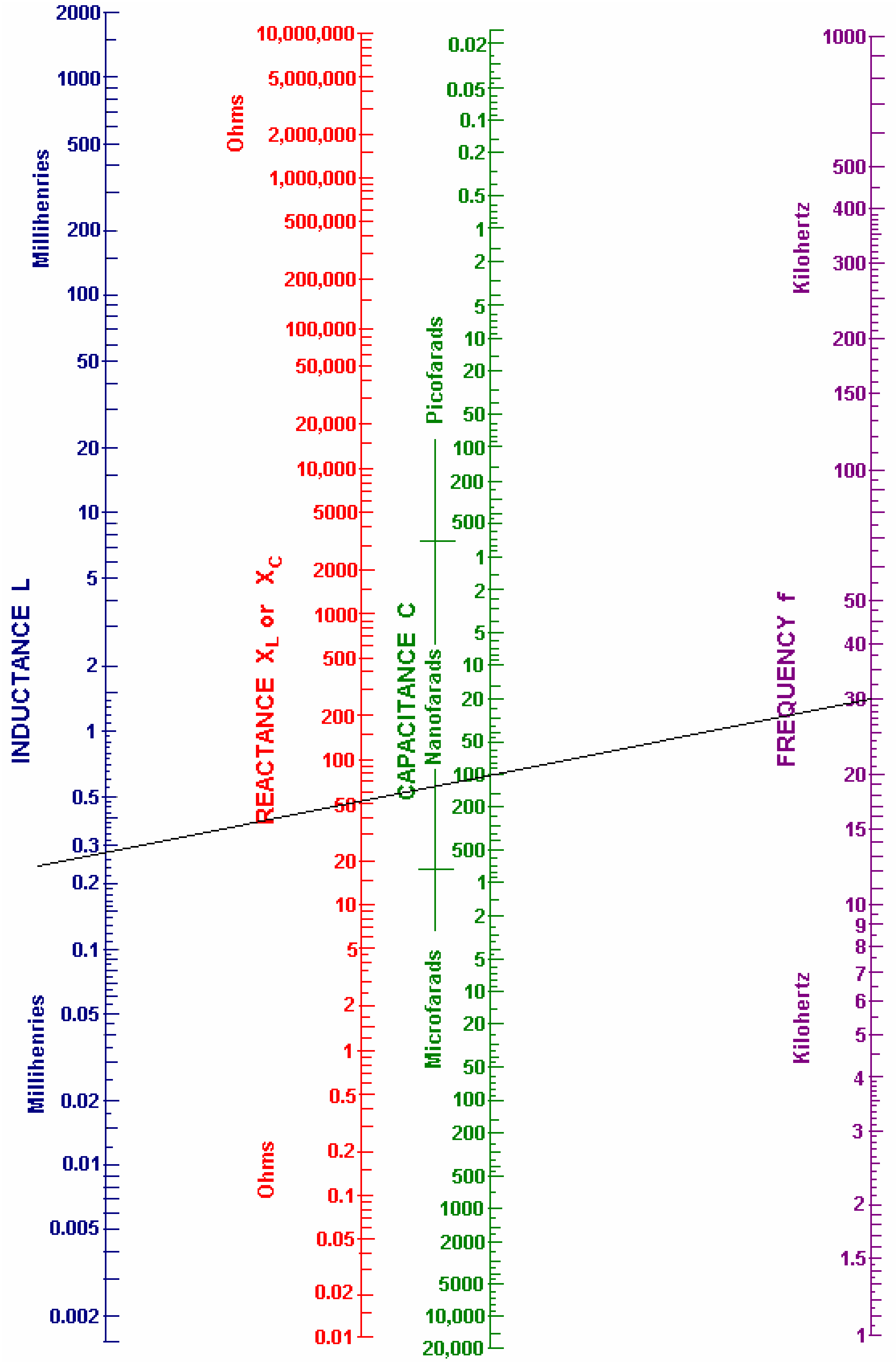

Draw a straight line from your 30 kHz frequency (purple line) through your 100 nanofarad capacitor value and carry the line on as far as the (blue) inductance line as shown above.

You can now read the reactance ("AC resistance") off the red line, which looks like 51 ohms to me. This means that when the circuit is running at a frequency of 30 kHz, then the current flow through your 100 nF capacitor will be the same as through a 51 ohm resistor. Reading off the blue "Inductance" line that same current flow at that frequency would occur with a coil which has an inductance of 0.28 millihenries.

I have recently been passed a copy of Don’s circuit diagram for this device, and it is shown here:

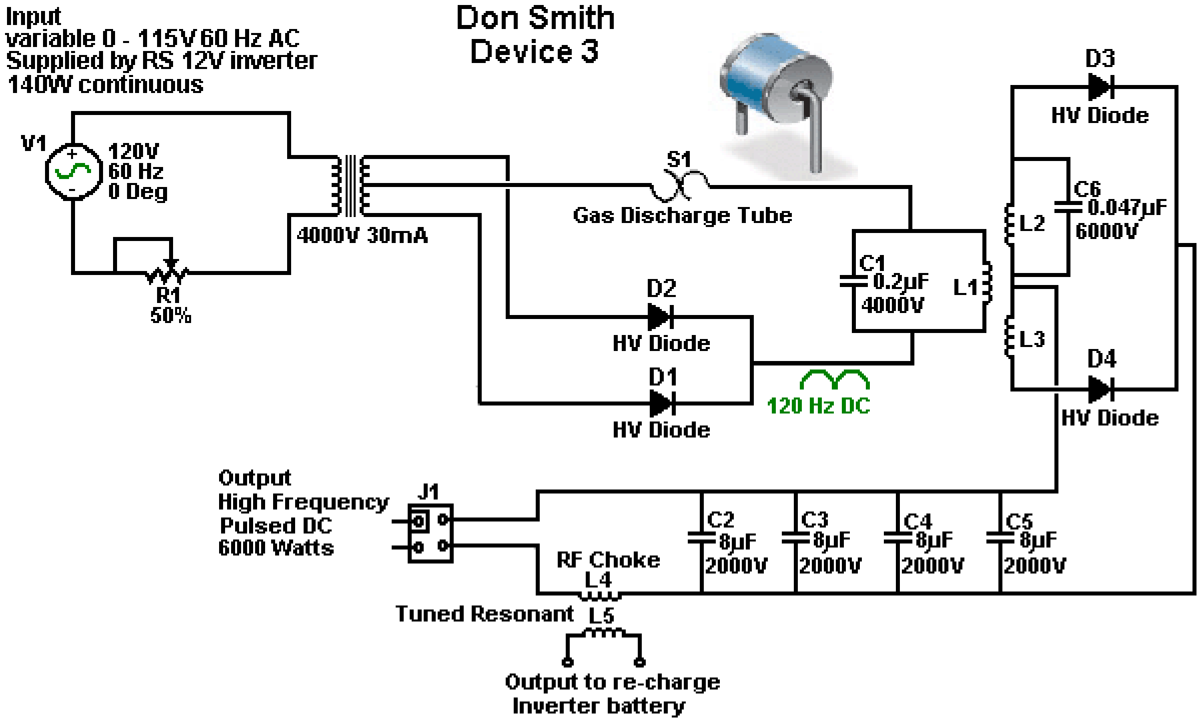

The 4000V 30mA transformer shown in this circuit diagram, may use a ferrite-cored transformer from a neon-tube driver module which steps up the voltage but it does not raise the frequency as that is clearly marked at 120 Hz pulsed DC. You will notice that this circuit diagram is drawn with Plus shown below Minus (which is most unusual).

Please note that when an earth connection is mentioned in connection with Don Smith's devices, we are talking about an actual wire connection to a metal object physically buried in the ground, whether it is a long copper rod driven into the ground, or an old car radiator buried in a hole like Tariel Kapanadze used, or a buried metal plate. When Thomas Henry Moray performed his requested demonstration deep in the countryside at a location chosen by the sceptics, the light bulbs which formed his demonstration electrical load, glowed more brightly with each hammer stroke as a length of gas pipe was hammered into the ground to form his earth connection.

Don also explains an even more simple version of his main device. This version does not need a Variac (variable voltage transformer) or high voltage capacitors. Here, a DC output is accepted which means that high-frequency step-down transformer operation can be used. This calls on the output side, for an air-core (or ferrite rod core) transformer which you would wind yourself from heavy duty wire. Mains loads would then be powered by using a standard off-the-shelf inverter. In this version, it is of course, very helpful to make the "L1" turns wire length exactly one quarter of the "L2" turns wire length in order to make the two coils automatically resonate together. The operating frequency of each of these coils is imposed on them by the output frequency of the neon-tube driver circuit. That frequency is maintained throughout the entire circuit until it is rectified by the four diodes feeding the low-voltage storage capacitor. The target output voltage will be either just over 12 volts or just over 24 volts, depending on the voltage rating of the inverter which is to be driven by the system.

As the circuit is capable of picking up additional magnetic pulses, such as those generated by other equipment, nearby lightning strikes, etc. an electronic component called a "varistor" marked "V" in the diagram, is connected across the load. This device acts as a voltage spike suppressor as it short-circuits any voltage above its design voltage, protecting the load from power surges. A Gas-Discharge Tube is an effective alternative to a varistor.

This circuit is effectively two Tesla Coils back-to-back and the circuit diagram might be:

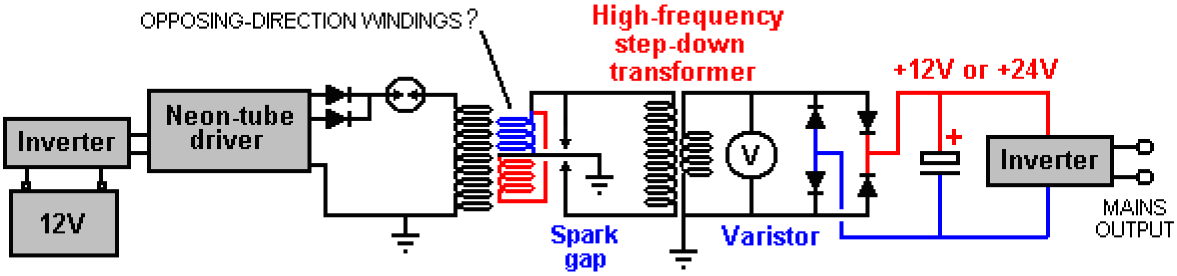

It is by no means certain that in this circuit, the red and blue windings are wound in opposing directions. The spark gap (or gas-discharge tube) in series with the primary of the first transformer alters the operation in a somewhat unpredictable way as it causes the primary to oscillate at a frequency determined by it's inductance and it's self-capacitance, and that may result in megahertz frequencies. The secondary winding(s) of that transformer **must** resonate with the primary and in this circuit which has no frequency-compensating capacitors, that resonance is being produced by the exact wire length in the turns of the secondary. This looks like a simple circuit, but it is anything but that. The excess energy is produced by the raised frequency, the raised voltage, and the very sharp pulsing produced by the spark. That part is straightforward. The remainder of the circuit is likely to be very difficult to get resonating as it needs to be in order to deliver that excess energy to the output inverter.

When considering the "length" of wire in a resonant coil, it is necessary to pay attention to the standing wave created under those conditions. The wave is caused by reflection of the signal when it reaches the end of the wire OR when there is a sudden change in the diameter of the wire as that changes the signal reflection ability at that point in the connection. You should pay attention to Richard Quick's very clear description of this in the section of his patent which is included later on in this chapter. Also, remember what Don Smith said about locating the peaks of the standing wave by using a hand-held neon lamp.

One very significant thing which Don pointed out is that the mains electricity available through the wall socket in my home, does **not** come along the wires from the generating station. Instead, the power station influences a local 'sub-station' and the electrons which flow through my equipment actually come from my local environment because of the influence of my local sub-station. Therefore, if I can create a similar influence in my home, then I no longer need that sub-station and can have as much electrical energy as I want, without having to pay somebody else to provide that influence for me.

A Practical Implementation of one of Don Smith's Designs

The objective here, is to determine how to construct a self-powered, free-energy electrical generator which has no moving parts, is not too expensive to build, uses readily available parts and which has an output of some kilowatts. However, under no circumstances should this document be considered to be an encouragement for you, or anyone else to actually build one of these devices. This document is presented solely for information and educational purposes, and as high voltages are involved, it should be considered to be a dangerous device unsuited to being built by inexperienced amateurs. The following section is just my opinions and so should not be taken as tried and tested, working technology, but instead, just the opinion of an inexperienced writer.

However, questions from several different readers indicate that a short, reasonably specific description of the steps needed to attempt a replication of a Don Smith device would be helpful. Again, this document must not be considered to be a recommendation that you actually build one of these high-voltage, potentially dangerous devices. This is just information intended to help you understand what I believe is involved in this process.

In broad outline, the following steps are used in the most simple version of the arrangement:

1. The very low frequency and voltage of the local mains supply is discarded in favour of an electrical supply which operates at more than 20,000 Hz (cycles per second) and has a voltage of anything from 350 volts to 10,000 volts. The higher voltages can give greater overall output power, but they involve greater effort in getting the voltage back down again to the level of the local mains voltage in order for standard mains equipment to be used.

2. This high-frequency high voltage is used to create a series of very rapid sparks using a spark gap which is connected to a ground connection. Properly done, the spark frequency is so high that there is no audible sound caused by the sparks. Each spark causes a flow of energy from the local environment into the circuit. This energy is not standard electricity which makes things hot when current flows through them, but instead this energy flow causes things to become cold when the power flows through them, and so it is often called "cold" electricity. It is tricky to use this energy unless all you want to do is light up a series of light bulbs (which incidentally, give out a different quality of light when powered with this energy). Surprisingly, the circuit now

contains substantially more power than the amount of power needed to produce the sparks. This is because additional energy flows in from the ground as well as from the local environment. If you have conventional training and have been fed the myth of "closed systems", then this will seem impossible to you. So, let me ask you the question: if, as can be shown, all of the electricity flowing into the primary winding of a transformer, flows back out of that winding, then where does the massive, continuous flow of electricity coming from the secondary winding come from? None of it comes from the primary circuit and yet millions of electrons flow out of the secondary in a continuous stream which can be supplied indefinitely. So, where do these electrons come from? The answer is 'from the surrounding local environment which is seething with excess energy' but your textbooks won't like that fact as they believe that the transformer circuit is a 'closed system' – something which probably can't be found anywhere in this universe.

3. This high-voltage, high-frequency, high-power energy needs to be converted to the same sort of hot electricity which comes out of a mains wall socket at the local voltage and frequency. This is where skill and understanding come into play. The first step is to lower the voltage and increase the available current with a step-down resonant transformer. This sounds highly technical and complicated, and looking at Don Smith's expensive Barker & Williamson coil, makes the whole operation appear to be one for rich experimenters only. This is not the case and a working solution can be cheap and easy. It is generally not convenient to get the very high voltage all the way down to convenient levels in a single step, and so, one or more of those resonant transformers can be used to reach the target voltage level. Each step down transformer boosts the available current higher and higher.

4. When a satisfactory voltage has been reached, we need to deal with the very high frequency. The easiest way to deal with it is to use high-speed diodes to convert it to pulsing DC and feed that into a capacitor to create what is essentially, an everlasting battery. Feeding this energy into a capacitor converts it into conventional "hot" electricity and a standard off-the-shelf inverter can be used to give the exact voltage and frequency of the local mains supply. In most of the world, that is 220 volts at 50 cycles per second. In America it is 110 volts at 60 cycles per second. Low-cost inverters generally run on either 12 volts or 24 volts with the more common 12 volt units being cheaper.

So, let's take a look at each of these step in more detail and see if we can understand what is involved and what our options are:

1. We want to produce a high-voltage, high-frequency, low-current power source. Don Smith shows a Neon-Sign Transformer module. His module produced a voltage which was higher than was convenient and so he used a variable AC transformer or "Variac" as it is commonly known, to lower the input voltage and so, lower the output voltage. There is actually no need for a Variac as we can handle the higher voltage or alternatively, use a more suitable Neon-Sign Transformer module.

   However, we have a problem with using that technique. In the years since Don bought his module, they have been redesigned to include circuitry which disables the module if any current flows out of it directly to earth, and as that is exactly what we would want to use it for, so most, if not all of the currently available neon-sign transformer modules are not suitable for our needs. However, I'm told that if the module has an earth wire and that earth wire is left unconnected, that it disables the earth-leakage circuitry, allowing the unit to be used in a Don Smith circuit. Personally, I would not recommend that if the module is enclosed in a metal housing.

   A much cheaper alternative is shown here: http://www.youtube.com/watch?v=RDDRe_4D93Q where a small plasma globe circuit is used to generate a high-frequency spark. It seems highly likely that one of those modules would suit our needs:

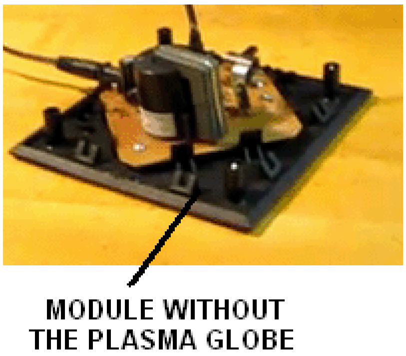

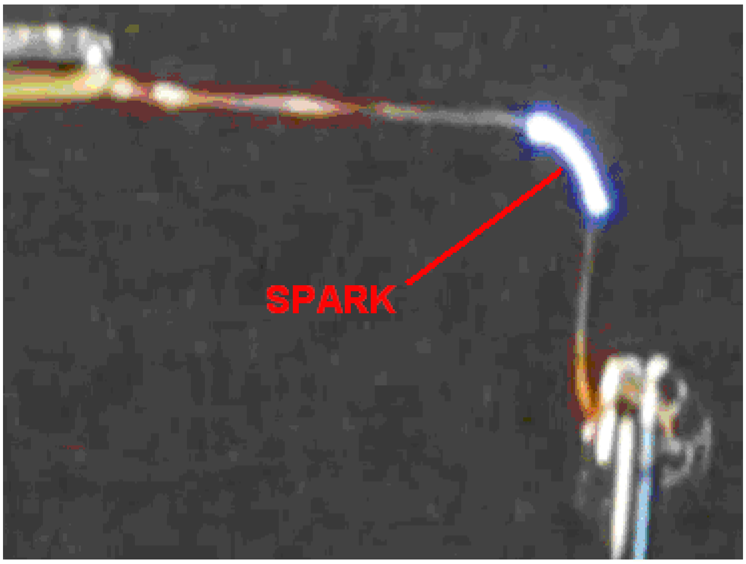

An alternative method is to build your own power supply from scratch. Doing that is not particularly difficult and if you do not understand any electronics, then perhaps, reading the beginner's electronics tutorial in chapter 12 (http://www.free-energy-info.com/Chapter12.pdf) will fill you in on all of the basics needed for understanding (and probably designing your own) circuits of this type. Here is a variable frequency design for home-construction:

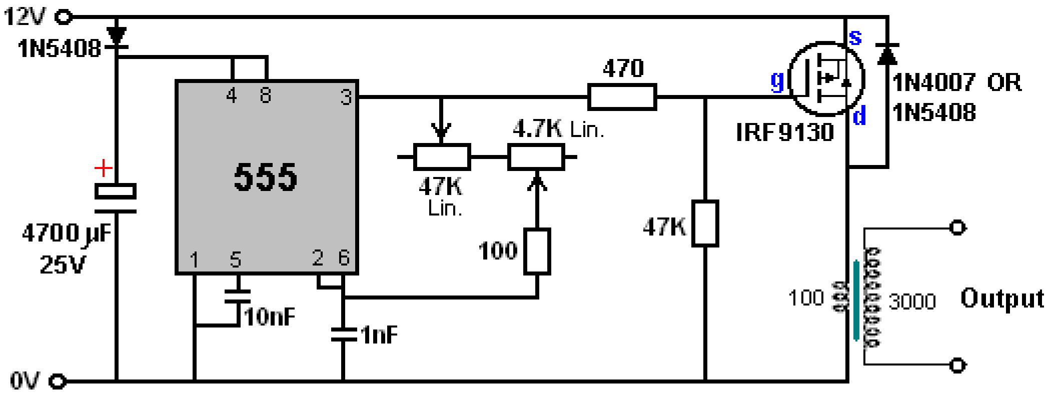

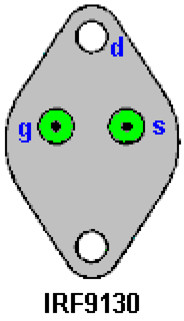

One advantage of this circuit is that the output transformer is driven at the frequency set by the 555 timer and that frequency is not affected by the number of turns in the primary winding, nor it's inductance, wire diameter, or anything else to do with the coil. While this circuit shows the rather expensive IRF9130 transistor, I expect that other P-channel FETs would work satisfactorily in this circuit. The IRF9130 transistor looks like this:

The circuit has a power supply diode and capacitor, ready to receive energy from the output at some later date if that is possible and desired. The 555 circuit is standard, giving a 50% Mark/Space ratio. The 10 nF capacitor is there to maintain the stability of the 555 and the timing section consists of two variable resistors, one fixed resistor and the 1 nF capacitor. This resistor arrangement gives a variable resistance of anything from 100 ohms to 51.8K and that allows a substantial frequency range. The 47K (Linear) variable resistor controls the main tuning and the 4.7K (Linear) variable resistor gives a more easily adjustable frequency for exact tuning. The 100 ohm resistor is there in case both of the variable resistors are set to zero resistance. The output is fed through a 470 ohm resistor to the gate of a very powerful P-channel FET transistor which drives the primary winding of the output transformer.

The output transformer can be wound on an insulating spool covering a ferrite rod, giving both good coupling between the windings, and high-frequency operation as well. The turns ratio is set to just 30:1 due to the high number of primary winding turns. With a 12-volt supply, this will give a 360-volt output waveform, and by reducing the primary turns progressively, allows the output voltage to be increased in controlled steps. With 10 turns in the primary, the output voltage should be 3,600 volts and with just 5 turns 7,200 volts. The higher the voltage used, the greater the amount of work needed later on to get the voltage back down to the output level which we want.

Looking at the wire specification table, indicates that quite a small wire diameter could be used for the oscillator output transformer's secondary winding. While this is perfectly true, it is not the whole story. Neon Tube Drivers are very small and the wire in their output windings is very small diameter indeed. Those driver modules are very prone to failure. If the insulation on any one turn of the winding fails and one turn becomes a short-circuit, then that stops the winding from oscillating, and a replacement is needed. As there are no particular size constraints for this project, it might be a good idea to use enamelled copper wire of 0.45 mm or larger in an attempt to avoid this insulation failure hazard. No part of the transformer coil spool should be metal and it would not be any harm to cover each layer of secondary winding with a layer of electrical tape to provide additional insulation between the coil turns in one layer and the turns in the layer on top of it.

A plug-in board layout might be:

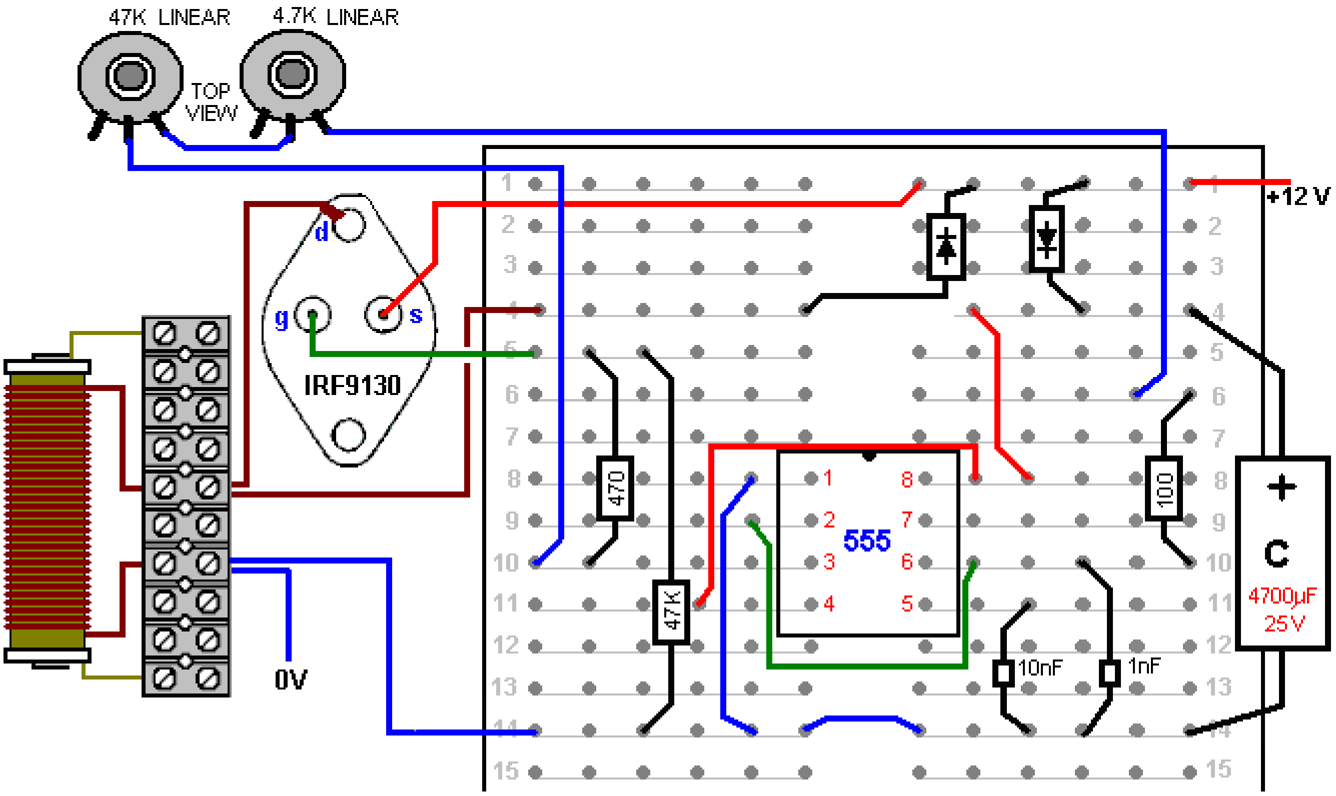

Please remember that you can't just stick your average voltmeter across a 4 kV capacitor (unless you really do want to buy another meter) as they only measure up to about a thousand volts DC. So, if you are using high voltage, then you need to use a resistor-divider pair and measure the voltage on the lower resistor. But what resistor values should you use? If you put a 10 Megohm resistor across your 4 kV charged capacitor, the current flowing through the resistor would be 0.4 milliamps. Sounds tiny, doesn't it? But that 0.4 mA is 1.6 watts which is a good deal more than the wattage which your resistor can handle. Even using this arrangement:

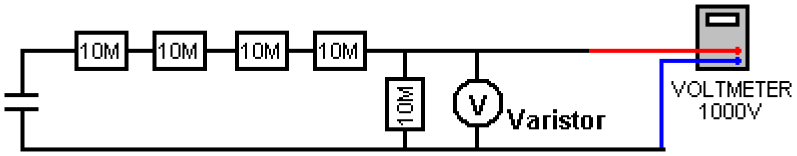

the current will be 0.08 mA and the wattage per resistor will be 64 mW. The meter reading will be about 20% of the capacitor voltage which will give a voltmeter reading of 800 volts. The input resistance of the meter needs to be checked and possibly, allowed for as the resistance in this circuit is so high (see chapter 12). When making a measurement of this type, the capacitor is discharged, the resistor chain and meter attached, and then, and only then, is the circuit powered up, the reading taken, the input power disconnected, the capacitor discharged, and the resistors disconnected. High-voltage circuits are highly dangerous, especially so, where a capacitor is involved. The recommendation to wear thick rubber gloves for this kind of work, is not intended to be humorous. Circuits of this type are liable to generate unexpected high-voltage spikes, and so, it might be a good idea to connect a varistor across the meter to protect it from those spikes. The varistor need to be set to the voltage which you intend to measure and as varistors may not be available above a 300V threshold, two or more may need to be connected in series where just one is shown in the diagram above. The varistor should not have a higher voltage rating than your meter.

2. We now need to use this high voltage to create a strategically positioned spark to a ground connection. When making an earth connection, it is sometimes suggested that connecting to water pipes or radiators is a good idea as they have long lengths of metal piping running under the ground and making excellent contact with it. However, it has become very common for metal piping to be replaced with cheaper plastic piping and so any proposed pipe connection needs a check to ensure that that there is metal piping which runs all the way into the ground.

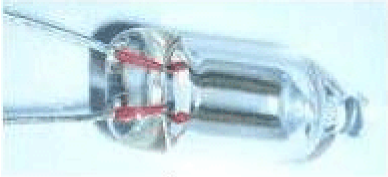

Neon

Gas-Discharge Tube

The spark gaps shown can be commercial high-voltage gas discharge tubes, adjustable home-made spark gaps with stainless steel tips about 1 mm apart, car spark plugs, or standard neon bulbs, although these run rather hot in this application. A 15 mm x 6 mm size neon bulb operates with only 90 or 100 volts across it, it would take a considerable number of them connected in series to create a high voltage spark gap, but it is probably a misconception that the spark gap itself needs a high voltage. Later on in this chapter, there is an example of a very successful system where just one neon bulb is used for the spark gap and an oscillating magnetic field more than a meter wide is created when driven by just an old 2,500 volt neon-sign transformer module. If using a neon bulb for the spark gap, then an experienced developer recommends that a 22K resistor is used in series with the neon in order to extend it's working life very considerably.

This circuit is one way to connect the spark gap and ground connection:

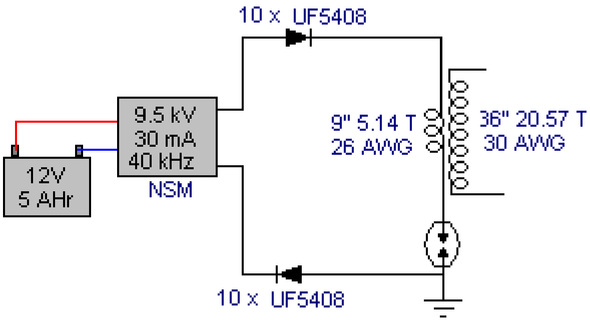

This is an adaption of a circuit arrangement used by the forum member "SLOW-'N-EASY" on the Don Smith topic in the energeticforum. Here, he is using a 'LowGlow' neon transformer intended for use on a bicycle. The diodes are there to protect the high-voltage power supply from any unexpected voltage spikes created later on in the circuit. The spark gap is connected between the primary winding of a step-up transformer and the earth connection. No capacitor is used. Seeing this circuit, we immediately think of Don Smith's large and expensive coils, but this experimenter does not use anything like that. Instead, he winds his transformer on a simple plastic former like this:

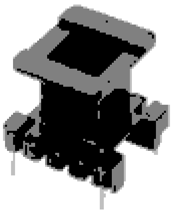

Ho Sung International. EI-2820 nylon bobbin. Core is 10 mm x 13 mm x 10 mm high. Top is 18.5 mm x 21.5 mm. Base is 22 mm x 26 mm. Four leads, 15 mm and 20 mm spacing

And to make matters 'worse' the primary winding wire is just 9 inches (228.6 mm) long and the secondary just 36 inches (914.4 mm) long, the primary being wound directly on top of the secondary. Not exactly a large or expensive construction and yet one which appears to perform adequately in actual tests.

This is a very compact form of construction, but there is no necessity to use exactly the same former for coils, nor is there anything magic about the nine-inch length of the L1 coil, as it could easily be any convenient length, say two feet or 0.5 metres, or whatever. The important thing is to make the L2 wire length exactly four times that length, cutting the lengths accurately. It is common practice to match the weight of copper in each coil and so the shorter wire is usually twice the diameter of the longer wire.

The circuit above, produces a cold electricity output of high voltage and high frequency. The voltage will not be the same as the neon transformer voltage, nor is the frequency the same either. The two coils resonate at their own natural frequency, unaltered by any capacitors.

3. The next step is to get the high voltage down to a more convenient level, perhaps, like this:

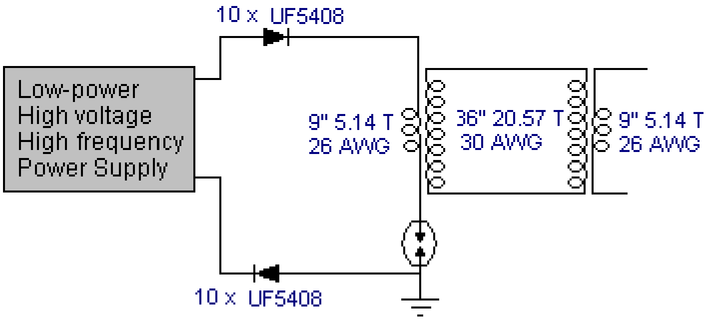

Here, an identical transformer, wound in exactly the same way, is used in reverse, to start the voltage lowering sequence. The wire length ratio is maintained to keep the transformer windings resonant with each other.

Supposing we were to wind the L2 coil of this second transformer in a single straight winding and instead of winding just one L1 winding on top of it, two or more L1 identical windings were placed on top of it – what would happen?:

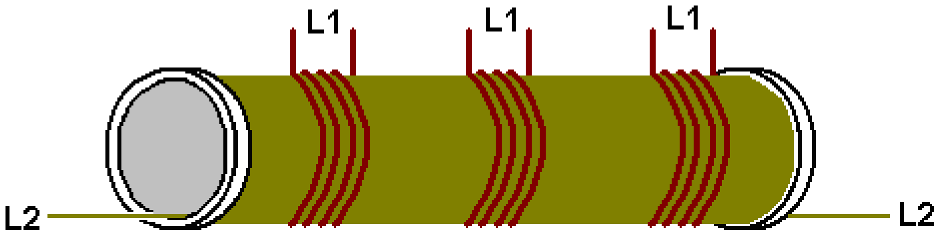

Now for a comment which will seem heretical to people steeped in the present day (inadequate) level of technology. The power flowing in these transformers is cold electricity which operates in an entirely different way to hot electricity. The coupling between these coils would be inductive if they were carrying hot electricity and in that case, any additional power take-off from additional L1 coils would have to be 'paid' for by additional current draw through the L2 coil. However, with the cold electricity which these coils are actually carrying, the coupling between the coils is magnetic and not inductive and that results in no increase in L2 current, no matter how many L1 coil take-offs there are. Any additional L1 coils will be powered for free. However, the position of the coils relative to each other has an effect on the tuning, so the L1 coil should be in the middle of the L2 coil, which means that any additional L1 coils are going to be slightly off the optimum tuning point.

4. Anyway, following through on just one L1 coil, there is likely to be at least one further step-down transformer needed and eventually, we need conversion to hot electricity:

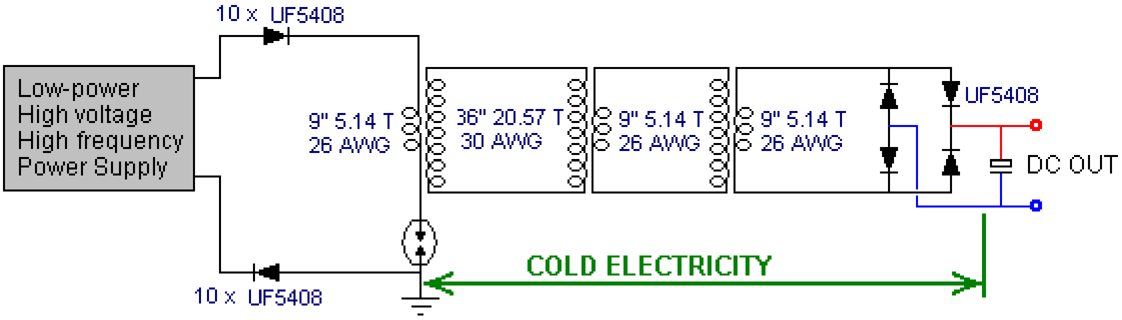

Probably the easiest conversion is by feeding the energy into a capacitor and making it standard DC. The frequency is still very high, so high-speed diodes (such as the 75-nanosecond UF54008) are needed here although the voltage level is now low enough to be no problem. The DC output can be used to power an inverter so that standard mains equipment can be used. It is not necessary to use just one (expensive) large-capacity inverter to power all possible loads as it is cheaper to have several smaller inverters, each powering it's own set of equipment. Most equipment will run satisfactorily on square-wave inverters and that includes a mains unit for powering the input oscillator circuit.

PVC pipe is not a great material when using high-frequency high-voltage signals, and grey PVC pipe is a particularly poor coil former material. The much more expensive acrylic pipe is excellent, but if using PVC, then performance will be better if the PVC pipe is coated with an insulating lacquer (or table tennis balls dissolved in acetone as show on YouTube).

However, there are some other factors which have not been mentioned. For example, if the L1 coil is wound directly on top of the L2 coil, it will have roughly the same diameter and so, the wire being four times longer, will have roughly four times as many turns, giving a step-up or step-down ratio of around 4:1. If, on the other hand, the coil diameters were different, the ratio would be different as the wire lengths are fixed relative to each other. If the L2 coil were half the diameter of the L1 coil, then the turns ratio would be about 8:1 and at one third diameter, 12:1 and at a quarter diameter 16:1 which means that a much greater effect could be had from the same wire length by reducing the L2 coil diameter. However, the magnetic effect produced by a coil is linked to the cross-sectional area of the coil and so a small diameter is not necessarily at great advantage. Also, the length of the L1 coil wire and number of turns in it, affect the DC resistance, and more importantly, the AC impedance which affects the amount of power needed to pulse the coil.

It is also thought that having the same weight of copper in each winding gives an improved performance, but what is not often mentioned is the opinion that the greater the weight of copper, the greater the effect. You will recall that Joseph Newman (chapter 11) uses large amounts of copper wire to produce remarkable effects. So, while 9 inches and 36 inches of wire will work for L1 and L2, there may well be improved performance from longer lengths of wire and/or thicker wires.

We should also not forget that Don Smith pointed out that voltage and current act (out of phase and) in opposite directions along the L2 coil, moving away from the L1 coil:

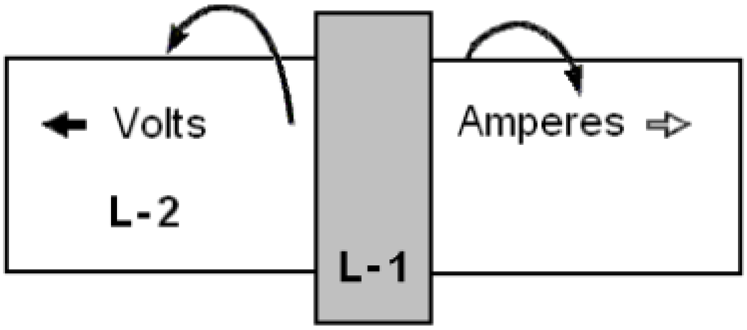

It has been suggested that a greater and more effective power output can be obtained by splitting the L2 coil underneath the L1 coil position, winding the second part of L2 in the opposite direction and grounding the junction of the two L2 windings. Don doesn't consider it necessary to reverse the direction of winding. The result is an L2 winding which is twice as long as before and arranged like this:

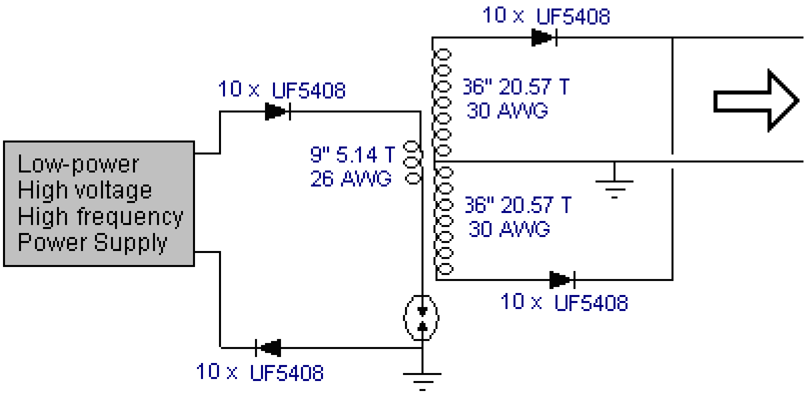

Here, the additional high-voltage diodes allow the two out of phase windings to be connected across each other. You will notice that this arrangement calls for two separate earth connections, both of which need to be high-quality connections, something like a pipe or rod driven deeply into moist soil or alternatively, a metal plate or similar metal object of substantial surface area, buried deep in moist earth, and a thick copper wire or copper braid used to make the connection. These earthing points need to be fairly far apart, say, ten metres. A single earth connection can't be used as that would effectively short-circuit across the L1/L2 transformer which you really do not want to do.

With this arrangement, the outline circuit becomes:

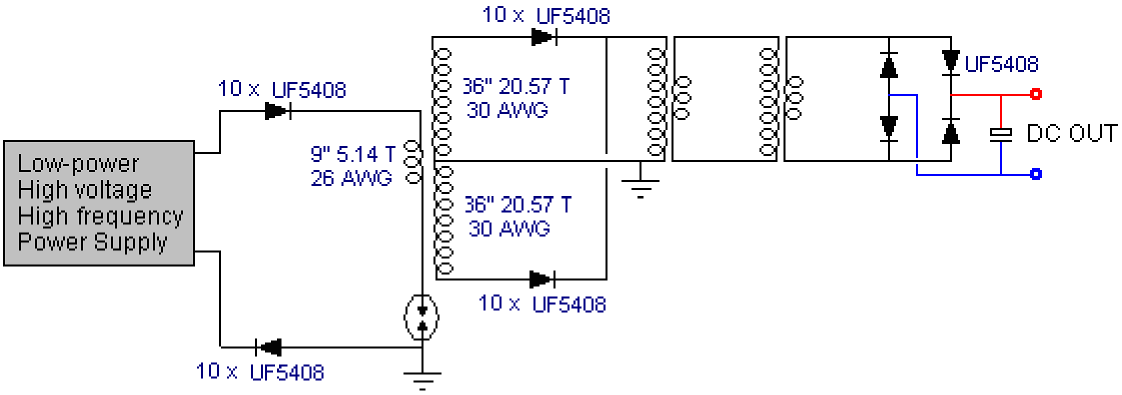

The thick earth wiring is helpful because in order to avoid the earth wire being included in the resonant wire length, you need a sudden change in wire cross-section:

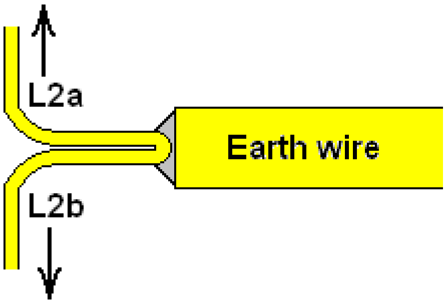

These are just some ideas which might be considered by some experienced developer who may be thinking of investigating Don Smith style circuitry.

To give you some idea of the capacity of some commercially available wires when carrying hot electricity, this table may help:

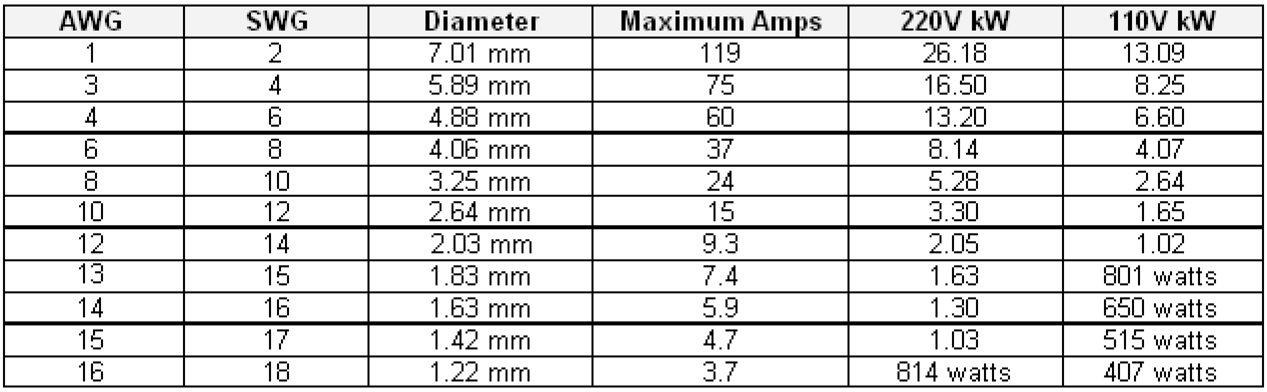

AWG	SWG	Diameter	Maximum Amps	220V kW	110V kW
1	2	7.01 mm	119	26.18	13.09
3	4	5.89 mm	75	16.50	8.25
4	6	4.88 mm	60	13.20	6.60
6	8	4.06 mm	37	8.14	4.07
8	10	3.25 mm	24	5.28	2.64
10	12	2.64 mm	15	3.30	1.65
12	14	2.03 mm	9.3	2.05	1.02
13	15	1.83 mm	7.4	1.63	801 watts
14	16	1.63 mm	5.9	1.30	650 watts
15	17	1.42 mm	4.7	1.03	515 watts
16	18	1.22 mm	3.7	814 watts	407 watts

It is recommended that the wire have a current carrying capacity of 20% more than the expected actual load, so that it does not get very hot when in use. The wire diameters do not include the insulation, although for solid enamelled copper wire, that can be ignored.

There is a most impressive video and circuit shown at http://youtu.be/Q3vr6qmOwLw where a very simple arrangement produces an immediately successful performance for the front end of Don's circuitry. The circuit appears to be:

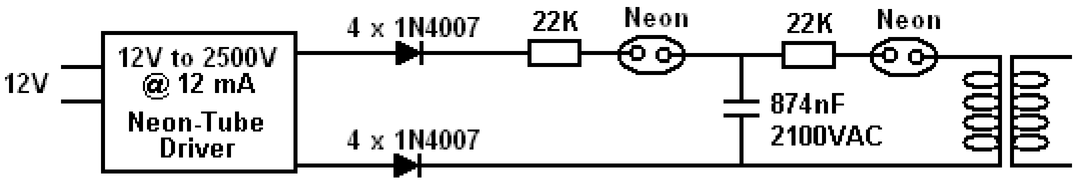

Here, a simple Neon Sign Transformer module which has no earth connection, is used to produce a 2.5 kV voltage with a frequency of 25 kHz and a maximum output current capacity of 12 mA. There is no difficulty in constructing the equivalent to that power supply unit. The two outputs from the module are converted to DC by a chain of four 1N4007 diodes in series in each of the two outputs (each chain being inside a plastic tube for insulation).

This output is fed through an optional 22K resistor via a neon lamp to a microwave oven capacitor which happens to be 874 nF with a voltage rating of 2,100 volts. You might feel that the voltage rating of the capacitor is too low for the output voltage of the neon sign module, but the neon has a striking voltage of just 90 volts and so the capacitor is not going to reach the output voltage of the power supply. The resistors are solely to extend the life of the neons as the gas inside the tube gets a considerable jolt in the first nanosecond after switch-on. It is unlikely that omitting those resistors would have any significant effect, but then, including them is a trivial matter. The second neon feeds the primary of the resonant transformer which is only shown in notional outline in the diagram above as the developer suggests that the primary acts as a transmitter and that any number of receiving coils can be used as individual secondaries by being tuned to the exact frequency of that resonating primary.

In the video showing this arrangement, the developer demonstrates the fluctuating, high-frequency field which extends for some four feet (1.2 m) around the coil. He also remarks that the single neons in his arrangement could each be replaced with two neons in series. In test which I ran, I found that I needed two neons in series ahead of the capacitor in order to get continuous lighting of the output neon. Also, one of the diodes needed to be reversed so that one faced towards the input and one away from it. It did not matter which diode was reversed as both configurations worked. Again, please note that this presentation is for information purposes only and it is **NOT** a recommendation that you should actually build one of these devices. Let me stress again that this is a high-voltage device made even more dangerous by the inclusion of a capacitor, and it is quite capable of killing you, so, don't build one. The developer suggests that it is an implementation of the "transmitter" section of Don's Transmitter/multiple-receivers design shown below. However, before looking at that design, there is one question which causes a good deal of discussion on the forums, namely, if the centre-tap of the L2 secondary coil is connected to ground, then should that earth-connection wire length be considered to be part of the quarter length of the L1 coil? To examine this possibility in depth, the following quote from Richard Quick's very clear explanation of resonance in his US patent 7,973,296 of 5th July 2011 is very helpful.

However, the simple answer is that for there to be exact resonance between two lengths of wire (whether or not part, or all of those lengths of wire happen to be wound into a coil), then one length needs to be **exactly** four times as long as the other, and ideally, half the diameter as well. At both ends of both lengths of wire, there needs to be a sudden change in wire diameter and Richard explains why this is. But, leaving that detailed explanation for now, we can use that knowledge to explain the above simplified system in more detail. Here is the circuit again:

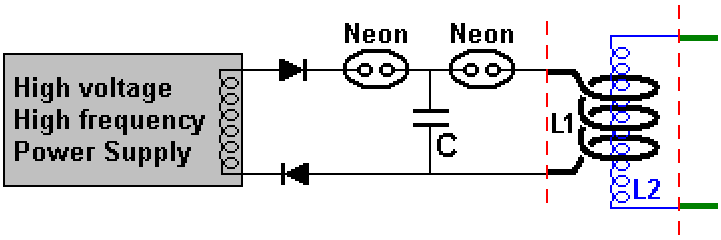

One very important point to note is that no earth connection is required and in spite of that, the performance shown on video is very impressive. While an earth connection can feed substantial power into the circuit, not needing one for the front end is an enormous advantage and potentially, opens the way for a truly portable device. Another very important point is the utter simplicity of the arrangement where only cheap, readily available components are used (and not many of those are needed). The resistors for extending the life of the neon bulbs are not shown, but they can be included if desired and the circuit operation is not altered significantly by having them there. If a higher spark voltage is wanted, then two or more neon bulbs can be used in series where these circuit diagrams show just one.

A point to note is that the lower diode is shown reversed when compared to the previous diagram. This is because the power supply shown is any generic power supply which drives a simple output coil which does not have a centre tap. The neon supply of the earlier diagram appears to have two separate outputs which will, presumably, be out of phase with each other as that is common practice for neon-sign driver modules. If you wish, the two diodes shown here could be replaced by a diode bridge of four high-voltage, high-speed diodes.

The wire lengths of L1 and L2 are measured very accurately from where the wire diameter changes suddenly, as indicated by the red dashed lines. The L2 wire length is exactly four times as long as the L1 wire length and the L2 wire diameter is half of the L1 wire diameter.

How long is the L1 wire? Well, how long would you like it to be? It can be whatever length you want and the radius of the L1 coil can be whatever you want it to be. The theory experts will say that the L1 coil should resonate at the frequency of the power feeding it. Well, good for them, I say, so please tell me what frequency that is. It is not going to be the frequency of the power supply as that will be changed by at least one of the neon bulbs. So, what frequency will the neon bulb produce? Not even the manufacturer could tell you that as there is quite a variation between individual bulbs which are supposedly identical.

Actually, it doesn't matter at all, because the L1 coil (and the L2 coil if you measure them accurately) has a resonant frequency all of its own and it will vibrate at that frequency no matter what the frequency feeding it happens to be. A coil resonates in very much the same way that a bell rings when it is struck. It doesn't matter how hard you strike the bell or how rapidly you strike it – the bell will ring at it's own natural frequency. So the L1 coil will resonate at it's own natural frequency no matter what rate the voltage spikes striking it arrive, and as the L2 coil has been carefully constructed to have exactly that same frequency, it will resonate in synchronisation with the L1 coil.

This means that the length of the wire for the L1 coil is the choice of the builder, but once that length is chosen it determines the length of the wire for the L2 coil as that is exactly four times as long, unless the builder decides to use an arrangement which has L2 wound in both the Clockwise and counter-clockwise directions, in which case, each half of the L2 coil will be four times the length of the wire in the L1 coil, like this:

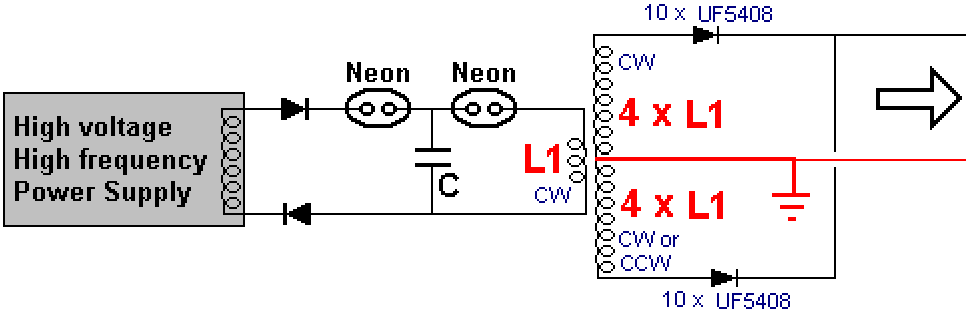

Mind you, there is one other factor to be considered when deciding what the most convenient wire length for L1 might be, and that is the number of turns in the L1 coil. The larger the ratio between the turns in L1 and the turns in L2, the higher the voltage boost produced by the L1/L2 transformer, and remember that the length of L2 is fixed relative to the length of L1.

So, a possible circuit style might be:

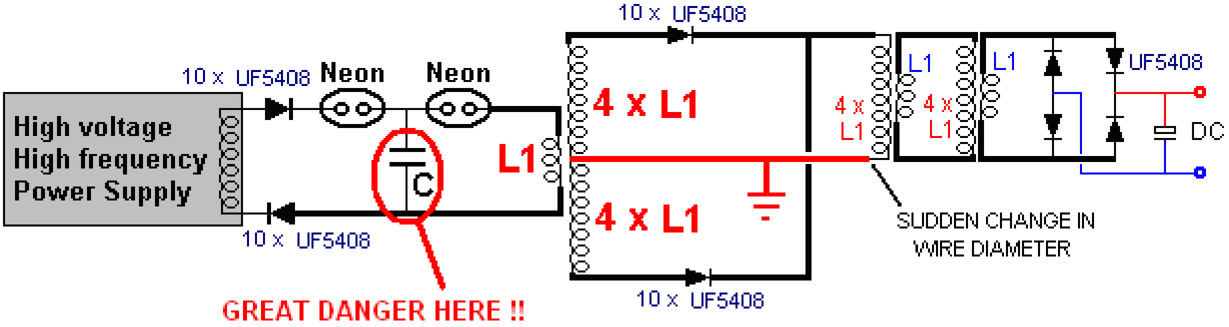

There are some important points to remember. One is that there must be a sudden change of wire diameter at both ends of each L1 coil and at the ends of each L2 coil. If there isn’t, then the connecting wire length will form part of the coil and if there is some change in diameter but not very much, then it is anybody’s guess what the resonant wire length for that coil will be. There can be as many step-down isolation air-core L1/L2 transformers as desired and these do not need to be particularly large or expensive.

The builder of this circuit put it together in just a few minutes, using components which were to hand, including the microwave oven capacitor marked “C” in the diagrams above. That capacitor is isolated on both sides by the neon bulb spark gaps and so it will have no modifying effect on the resonant frequency of any of the coils in this circuit. But it is vital to understand that the energy stored in that capacitor can, and will, kill you instantly if you were to touch it, so let me stress once again that this information is **NOT** a recommendation that you actually build this circuit. The DC output from the circuit is intended to power a standard inverter, which in turn, would be perfectly capable of powering the high voltage, high frequency input oscillator.

One final point is that as demonstrated in the video, the oscillating magnetic field produced by the L1 coil can power several identical L2 coils, giving several additional power outputs for no increase in input power, because the coupling is magnetic and not inductive as mentioned earlier in this chapter. Please notice that neither the L1 coil nor the L2 coil has a capacitor connected across it, so resonance is due solely to wire length and no expensive high-voltage capacitors are needed to get every L1/L2 coil pair resonating together. One possible arrangement might be like this:

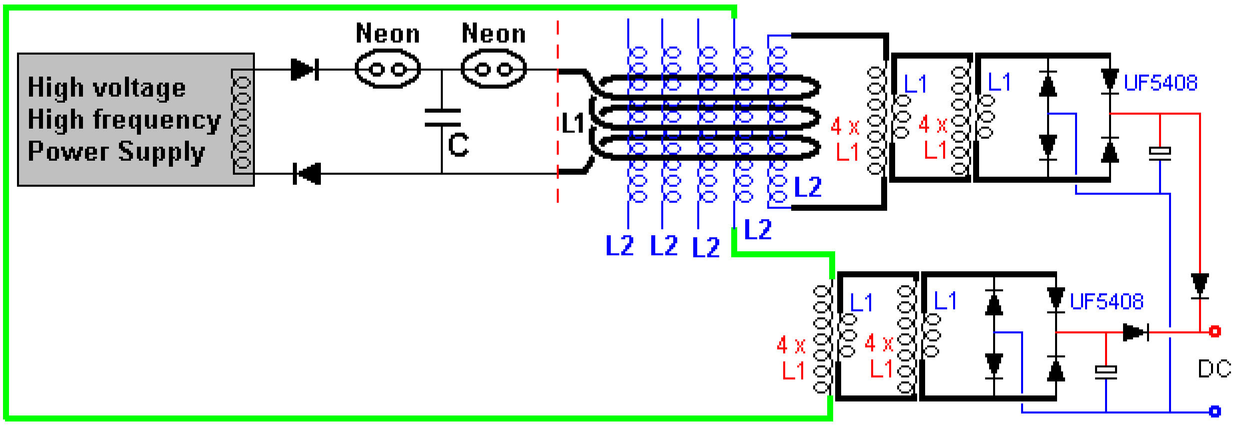

Where two of the L2 coils are shown connected together to give increased output power. This arrangement uses low-voltage inexpensive components for the output stages and there is no obvious limit to the amount of output power which could be provided. As the circuit operates at high frequency throughout, there is no particular need for additional L2 coils to be placed physically inside the L1 coil:

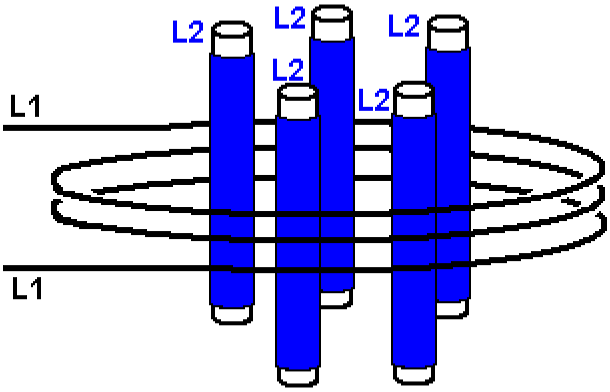

However, there can be an advantage to this arrangement in that the wire length of the L1 coil is greater, which in turn makes the wire length of each L2 coil greater (being four times longer). This gives greater flexibility when planning the turns ratio of the L1/L2 transformer. The voltage step-up or step-down of that transformer happens to be in the ratio of the turns, in spite of the fact that this is not inductive coupling and so standard transformer technology does not apply.

When you choose the number of turns and coil diameter for L1, that also gives the length of the L2 wire. In order to get the desired output voltage, if perhaps, the step-down ratio is needed to be an amount of 46:1, then you need 46 times the number of L1 turns on the L2 coil. That means that you know both the wire length and number of turns wanted in the L2 coil. But, as each turn will have a length of 3.14159 times the diameter, it follows then that the wanted diameter is the wire length per turn, divided by 3.14159. The wire sits on top of the tube on which it is wound and so has a greater diameter by one wire thickness, so the calculated tube diameter needs to be reduced by one wire diameter. For example, if the length per turn is 162 mm and the wire diameter 0.8 mm, then the tube diameter would be 162 / 3.14159 – 0.8 which is 50.766 mm (just over two inches).

So, if we have resonant standing-wave voltages in our L2 coil and some of that signal passes through the wire connecting one end of the coil to the earth, then what will happen? The best way to check it is to test the way which a prototype behaves, however, if I may express an opinion, I would suggest that the signal passing down the earth wire will be absorbed when it reaches the earth and that will prevent the signal being reflected back to the L2 coil to upset it's operation.

Another device of Don's is particularly attractive because almost no home-construction is needed, all of the components being available commercially, and the output power being adaptable to any level which you want. Don particularly likes this circuit because it demonstrates COP>1 so neatly and he remarks that the central transmitter Tesla Coil on its own is sufficient to power a household.

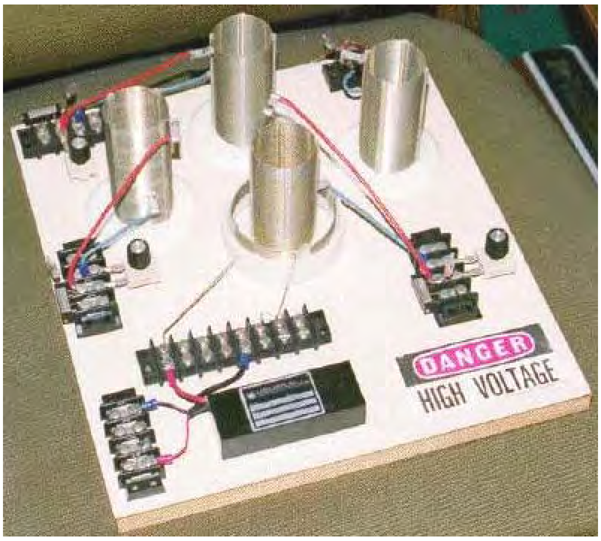

The coil in the centre of the board is a power transmitter made from a Tesla Coil constructed from two Barker & Williamson ready-made coils. Three more of the inner coil are also used as power receivers. The outer, larger diameter coil is a few turns taken from one of their standard coils and organised so that the coil wire length is one quarter of the coil wire length of the inner coil ("L2").

As before, a commercial neon-tube driver module is used to power the "L1" outer coil with high voltage and high frequency. It should be understood that as power is drawn from the local environment each time the power driving the transmitter coil "L1" cycles, that the power available is very much higher at higher frequencies. The power at mains frequency of less than 100 Hz is far, far less than the power available at 35,000 Hz, so if faced with the choice of buying a 25 kHz neon-tube driver module or a 35 kHz module, then the 35 kHz module is likely to give a much better output power at every voltage level.

The "L1" short outer coil is held in a raised position by the section of white plastic pipe in order to position it correctly relative to the smaller diameter "L2" secondary coil.

The secondary coils are constructed using Barker & Williamson's normal method of using slotted strips to hold the tinned, solid copper wire turns in place.

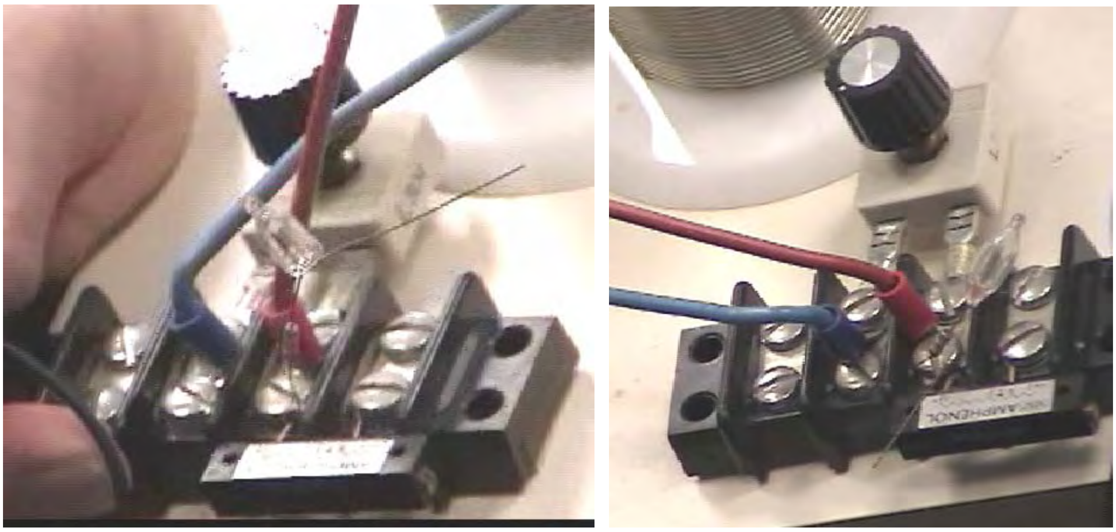

As there are very slight differences in the manufactured coils, each one is tuned to the exact transmitter frequency and a miniature neon is used to show when the tuning has been set correctly.

The key feature of this device is the fact that any number of receiver coils can be placed near the transmitter and each will receive a full electrical pick up from the local environment, without altering the power needed to drive the Tesla Coil transmitter - more and more output without increasing the input power - unlimited COP values, all of which are over 1. The extra power is flowing in from the local environment where there is almost unlimited amounts of excess energy and that inflow is caused by the rapidly vibrating magnetic field generated by the central Tesla Coil. While the additional coils appear to just be scattered around the base board, this is not the case. The YouTube video http://www.youtube.com/watch?v=TiNEHZRm4z4&feature=related demonstrates that the pick-up of these coils is affected to a major degree by the distance from the radiating magnetic field. This is to do with the wavelength of the signal driving the Tesla Coil, so the coils shown above are all positioned at exactly the same distance from the Tesla Coil. You still can have as many pick-up coils as you want, but they will be mounted in rings around the Tesla Coil and the coils in each ring will be at the same distance from the Tesla Coil in the centre.

Each of the pick up coils act exactly the same as the "L2" secondary coil of the Tesla Coil transmitter, each picking up the same level of power. Just as with the actual "L2" coil, each will need an output circuit arrangement as described for the previous device. Presumably, the coil outputs could be connected in parallel to increase the output amperage, as they are all resonating at the same frequency and in phase with each other. Each will have its own separate output circuit with a step-down isolation transformer and frequency adjustment as before. If any output is to be a rectified DC output, then no frequency adjustment is needed, just rectifier diodes and a smoothing capacitor following the step-down transformer which will need to be an air core or ferrite core type due to the high frequency. High voltage capacitors are very expensive. The http://www.richieburnett.co.uk/parts.html web site shows various ways of making your own high-voltage capacitors and the advantages and disadvantages of each type.

There are two practical points which need to be mentioned. Firstly, as the Don Smith devices shown above feed radio frequency waveforms to coils which transmit those signals, it may be necessary to enclose the device in an earthed metal container in order not to transmit illegal radio signals. Secondly, as it can be difficult to obtain high-voltage high-current diodes, they can be constructed from several lower power diodes. To increase the voltage rating, diodes can be wired in a chain. Suitable diodes are available as repair items for microwave ovens. These typically have about 4,000 volt ratings and can carry a good level of current. As there will be minor manufacturing differences in the diodes, it is good practice to connect a high value resistor (in the 1 to 10 megohm range) across each diode as that ensures that there is a roughly equal voltage drop across each of the diodes:

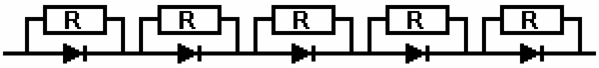

If the diode rating of these diodes were 4 amps at 4,000 volts, then the chain of five could handle 4 amps at 20,000 volts. The current capacity can be increased by connecting two or more chains in parallel. Most constructors omit the resistors and find that they seem to get satisfactory performance.

The impedance of a coil depends on it's size, shape, method of winding, number of turns and core material. It also depends on the frequency of the AC voltage being applied to it. If the core is made up of iron or steel, usually thin layers of iron which are insulated from each other, then it can only handle low frequencies. You can forget about trying to pass 10,000 cycles per second ("Hz") through the coil as the core just can't change it's magnetic poles fast enough to cope with that frequency. A core of that type is ok for the very low 50 Hz or 60 Hz frequencies used for mains power, which are kept that low so that electric motors can use it.

For higher frequencies, ferrite can be used for a core and that is why some portable radios use ferrite-rod aerials, which are a bar of ferrite with a coil wound on it. For higher frequencies (or higher efficiencies) iron dust encapsulated in epoxy resin is used. An alternative is to not use any core material and that is usually referred to as an "air-core" coil. These are not limited in frequency by the core but they have a very much lower inductance for any given number of turns. The efficiency of the coil is called it's "Q" (for "Quality") and the higher the Q factor, the better. The resistance of the wire lowers the Q factor.

A coil has inductance, and resistance caused by the wire, and capacitance caused by the turns being near each other. However, having said that, the inductance is normally so much bigger than the other two components that we tend to ignore the other two. Something which may not be immediately obvious is that the impedance to AC current flow through the coil depends on how fast the voltage is changing. If the AC voltage applied to a coil completes one cycle every ten seconds, then the impedance will be much lower than if the voltage cycles a million times per second.

If you had to guess, you would think that the impedance would increase steadily as the AC frequency increased. In other words, a straight-line graph type of change. That is not the case. Due to a feature called resonance, there is one particular frequency at which the impedance of the coil increases massively. This is used in the tuning method for AM radio receivers. In the very early days when electronic components were hard to come by, variable coils were sometimes used for tuning. We still have variable coils today, generally for handling large currents rather than radio signals, and we call them "rheostats" and some look like this:

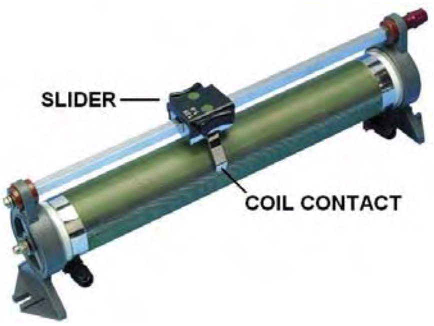

These have a coil of wire wound around a hollow former and a slider can be pushed along a bar, connecting the slider to different winds in the coil depending on it's position along the supporting bar. The terminal connections are then made to the slider and to one end of the coil. The position of the slider effectively changes the number of turns of wire in the part of the coil which is being used in the circuit. Changing the number of turns in the coil, changes the resonant frequency of that coil. AC current finds it very, very hard to get through a coil which has the same resonant frequency as the AC current frequency. Because of this, it can be used as a radio signal tuner:

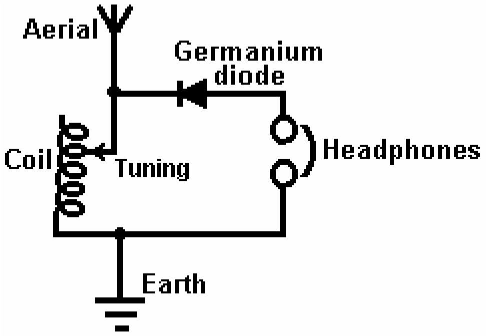

If the coil's resonant frequency is changed to match that of a local radio station by sliding the contact along the coil, then that particular AC signal frequency from the radio transmitter finds it almost impossible to get through the coil and so it (and only it) diverts through the diode and headphones as it flows from the aerial wire to the earth wire and the radio station is heard in the headphones. If there are other radio signals coming down the aerial wire, then, because they are not at the resonant frequency of the coil, they flow freely through the coil and don't go through the headphones.

This system was soon changed when variable capacitors became available as they are cheaper to make and they are more compact. So, instead of using a variable coil for tuning the radio signal, a variable capacitor connected across the tuning coil did the same job:

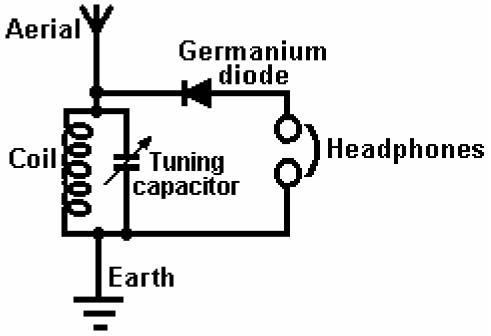

While the circuit diagram above is marked "Tuning capacitor" that is actually quite misleading. Yes, you tune the radio receiver by adjusting the setting of the variable capacitor, **but**, what the capacitor is doing is altering the resonant frequency of the coil/capacitor combination and it is the resonant frequency of that combination which is doing exactly the same job as the variable coil did on it's own.

This draws attention to two very important facts concerning coil/capacitor combinations. When a capacitor is placed across a coil "in parallel" as shown in this radio receiver circuit, then the combination has a very high impedance (resistance to AC current flow) at the resonant frequency. But if the capacitor is placed "in series" with the coil, then there is nearly zero impedance at the resonant frequency of the combination:

This may seem like something which practical people would not bother with, after all, who really cares? However, it is a very practical point indeed. Remember that Don Smith often uses an early version, off-the-shelf neon-tube driver module as an easy way to provide a high-voltage, high-frequency AC current source, typically, 6,000 volts at 30,000 Hz. He then feeds that power into a Tesla Coil which is itself, a power amplifier. The arrangement is like this:

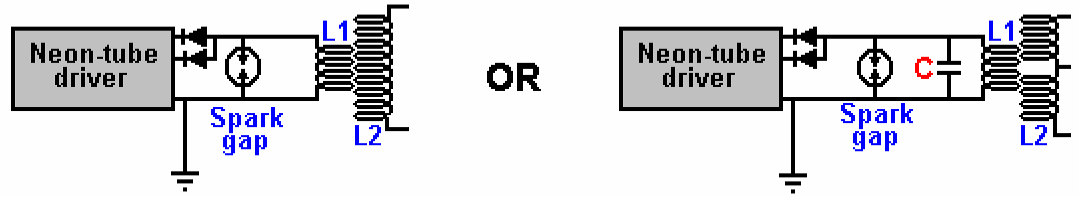

People who try to replicate Don's designs tend to say "I get great sparks at the spark gap until I connect the **L1** coil and then the sparks stop. This circuit can never work because the resistance of the coil is too low".

If the resonant frequency of the **L1** coil does not match the frequency being produced by the neon-tube driver circuit, then the low impedance of the **L1** coil at that frequency, will definitely pull the voltage of the neon-tube driver down to a very low value. But if the **L1** coil has the same resonant frequency as the driver circuit, then the **L1** coil (or the **L1** coil/capacitor combination shown on the right, will have a very high resistance to current flow through it and it will work well with the driver circuit. So, no sparks, means that the coil tuning is off. It is the same as tuning a radio receiver, get the tuning wrong and you don't hear the radio station.

This is very nicely demonstrated using simple torch bulbs and two coils in the YouTube video showing good output for almost no input power: http://www.youtube.com/watch?v=kQdcwDCBoNY and while only one resonant pick-up coil is shown, there is the possibility of using many resonant pick-up coils with just the one transmitter.

With a coil (fancy name "inductor" and symbol "L"), AC operation is very different to DC operation. The coil has a DC resistance which can be measured with the ohms range of a multimeter, but that resistance does not apply when AC is being used as the AC current flow is **not** determined by the DC resistance of the coil. Because of this, a second term has to be used for the current-controlling factor of the coil, and the term chosen is "impedance" which is the feature of the coil which "impedes" AC current flow through the coil.

The impedance of a coil depends on it's size, shape, method of winding, number of turns and core material. It also depends on the frequency of the AC voltage being applied to it. If the core is made up of iron or steel, usually thin layers of iron which are insulated from each other, then it can only handle low frequencies. You can forget about trying to pass 10,000 cycles per second ("Hz") through the coil as the core just can't change it's magnetic poles fast enough to cope with that frequency. A core of that type is ok for the very low 50 Hz or 60 Hz frequencies used for mains power, which are kept that low so that electric motors can use it.

For higher frequencies, ferrite can be used for a core and that is why some portable radios use ferrite-rod aerials, which are a bar of ferrite with a coil wound on it. For higher frequencies (or higher efficiencies) iron dust encapsulated in epoxy resin is used. An alternative is to not use any core material and that is usually referred to as an "air-core" coil. These are not limited in frequency by the core but they have a very much lower inductance for any given number of turns. The efficiency of the coil is called it's "Q" (for "Quality") and the higher the Q factor, the better. The resistance of the wire lowers the Q factor.

Constructing High-Quality Coils.

The Barker & Williamson coils used by Don in his constructions are expensive to purchase. Some years ago, in an article in a 1997 issue of the "QST" amateur radio publication, Robert H. Johns shows how similar coils can be constructed without any great difficulty. The Electrodyne Corporation research staff have stated that off-the-shelf solid tinned copper wire produces three times the magnetic field that un-tinned copper does, so perhaps that should be borne in mind when choosing the wire for constructing these coils.

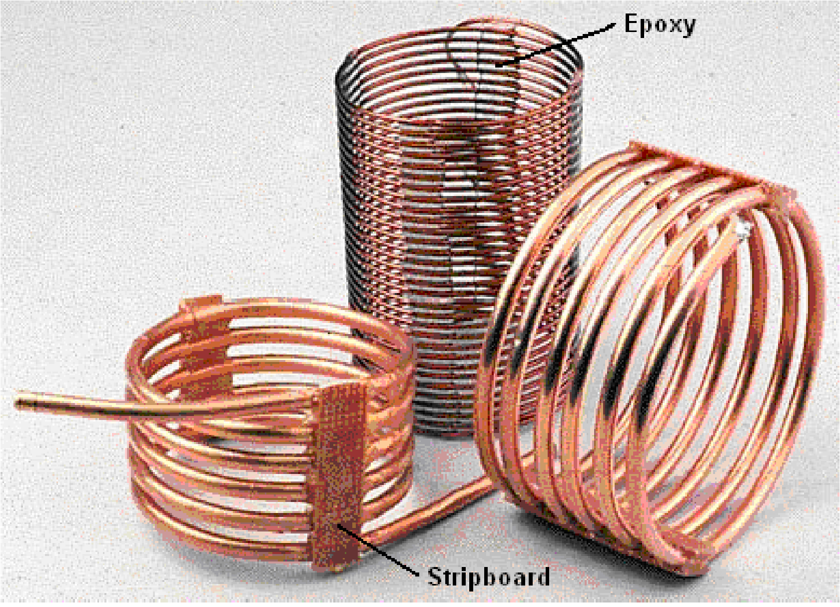

These home-made coils have excellent "Q" Quality factors, some even better than the tinned copper wire coils of Barker & Williamson because the majority of electrical flow is at the surface of the wire and copper is a better conductor of electricity than the silver tinning material.

The inductance of a coil increases if the turns are close together. The capacitance of a coil decreases if the turns are spread out. A good compromise is to space the turns so that there is a gap between the turns of one wire thickness. A common construction method with Tesla Coil builders is to use nylon fishing line or plastic strimmer cord between the turns to create the gap. The method used by Mr Johns allows for even spacing without using any additional material. The key feature is to use a collapsible former and wind the coil on the former, space the turns out evenly and then clamp them in position with strips of epoxy resin, removing the former when the resin has set and cured.

Mr Johns has difficulty with his epoxy being difficult to keep in place, but when mixed with the West System micro fibres, epoxy can be made any consistency and it can be applied as a stiff paste without any loss of it's properties. The epoxy is kept from sticking to the former by placing a strip of electrical tape on each side of the former.

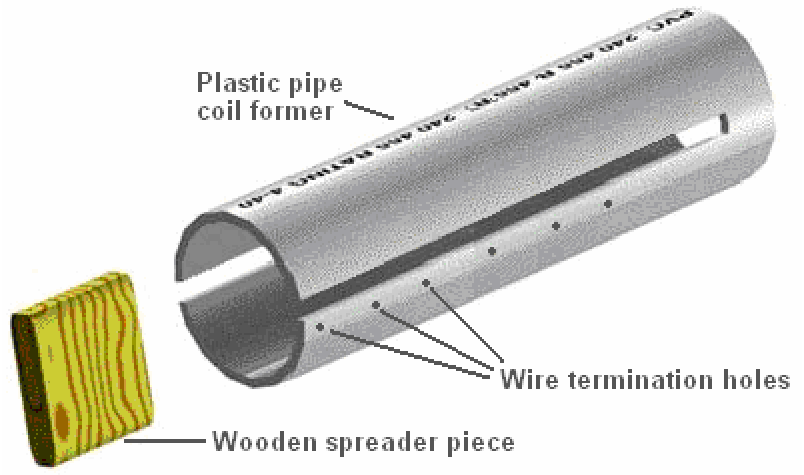

I suggest that the plastic pipe used as the coil former is twice the length of the coil to be wound as that allows a good degree of flexing in the former when the coil is being removed. Before the two slots are cut in the plastic pipe, a wooden spreader piece is cut and it's ends rounded so that it is a push-fit in the pipe. This spreader piece is used to hold the sides of the cut end exactly in position when the wire is being wrapped tightly around the pipe.

Two or more small holes are drilled in the pipe beside where the slots are to be cut. These holes are used to anchor the ends of the wire by passing them through the hole and bending them. Those ends have to be cut off before the finished coil is slid off the former, but they are very useful while the epoxy is being applied and hardening. The pipe slots are cut to a generous width, typically 10 mm or more.

The technique is then to wedge the wooden spreader piece in the slotted end of the pipe. Then anchor the end of the solid copper wire using the first of the drilled holes. The wire, which can be bare or insulated, is then wrapped tightly around the former for the required number of turns, and the other end of the wire secured in one of the other drilled holes. It is common practice to make the turns by rotating the former. When the winding is completed, the turns can be spaced out more evenly if necessary, and then a strip of epoxy paste applied all along one side of the coil. When that has hardened, (or immediately if the epoxy paste is stiff enough), the pipe is turned over and a second epoxy strip applied to the opposite side of the coil. A strip of paxolin board or strip-board can be made part of the epoxy strip. Alternatively, an L-shaped plastic mounting bracket or a plastic mounting bolt can be embedded in the epoxy ready for the coil installation later on.

When the epoxy has hardened, typically 24 hours later, the coil ends are snipped off, the spreader piece is tapped out with a dowel and the sides of the pipe pressed inwards to make it easy to slide the finished coil off the former. Larger diameter coils can be wound with small-diameter copper pipe.

The coil inductance can be calculated from:

Inductance in micro henrys $L = d^2n^2 / (18d + 40l)$

Where:
d is the coil diameter in inches measured from wire centre to wire centre
n is the number of turns in the coil
l is coil length in inches (1 inch = 25.4 mm)

Using this equation for working out the number of turns for a given inductance in micro henrys:

$$n = \frac{\sqrt{L(18d + 40l)}}{d}$$

A Russian Implementation of Don Smith's Design

Here is an attempt to translate a document from an unknown author on a Russian forum:

Assembly Instructions for the Free-Energy Generator

Part 1: Accessories and materials

1) The High-voltage power supply 3000V 100 – 200 W.

It is possible to use transformers from neon lamps, or any similar radio amateur designs with high EFFICIENCY of transformation and stabilisation of a desired current. Here is a possible implementation using the fly-back transformer from an old CRT TV set:

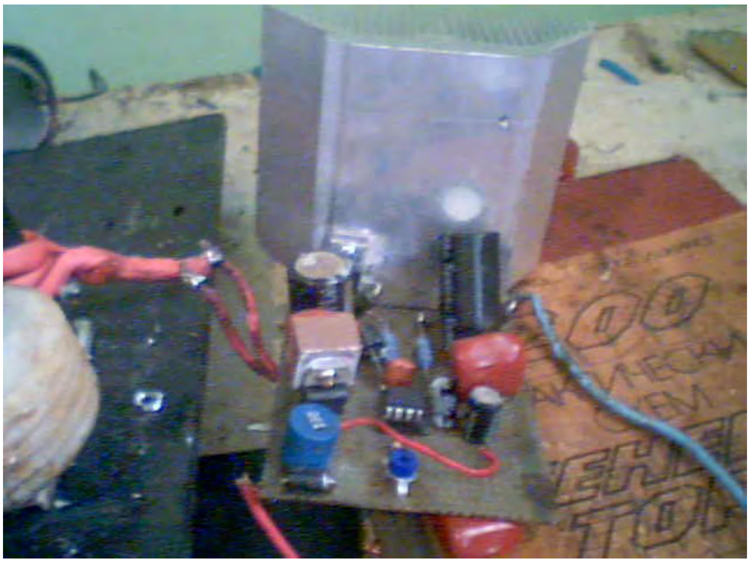

2) High-frequency resonant system L1/L2

The coil L1 is wound using a high-quality audio speaker cable with a cross-sectional area of 6.10 sq. mm, or alternatively, home-made litz wire. The litz wire or speaker cable length with connecting leads is about 2 meters.

The turns are wound on a plastic drain pipe of 50mm diameter, the number of turns is 4 or 5 (wound to the left, that is, counter-clockwise). Don't cut the rest of the winding wire, instead, pass it through the middle of the tube, and use it to connect the winding to the spark-gap and capacitor of the primary circuit. Example of the construction:

The secondary coil L2 of the resonant circuit, is wound using solid uninsulated copper wire with a diameter of 2 mm to 3 mm, preferably silver-plated (tinned wire is not so good). The secondary coil is wound with a diameter of about 75 mm. This coil has a tap in the middle. Both halves of the coil are wound in the same clockwise direction (to the right).

The approximate number of turns between 2 sets of 16 turns, to 2 sets of 18 turns. The coil must be wound without using a coil former.

These coils should be mounted in such a way as to prevent the flow of high-frequency high-voltage current to other parts of the circuit or components. The ends of the coil wires are clamped in terminal blocks mounted on the base plate, ready for connection to the other circuit components. The ratio of the wire lengths in coils L1 and L2 is 1 to 4, including the length of the connecting wires reaching to the other circuit components. A possible implementation of the secondary coil is shown here:

High-voltage diodes (chains) can be purchased ready-made or can be constructed from individual single diodes. The resulting diode chains should have a current rating of not less than 10 amperes at a voltage of 25 kV to 30 kV. It may be necessary to put several diode chains in parallel in order to meet this current rating requirement. Here are examples of these high-voltage diode chains:

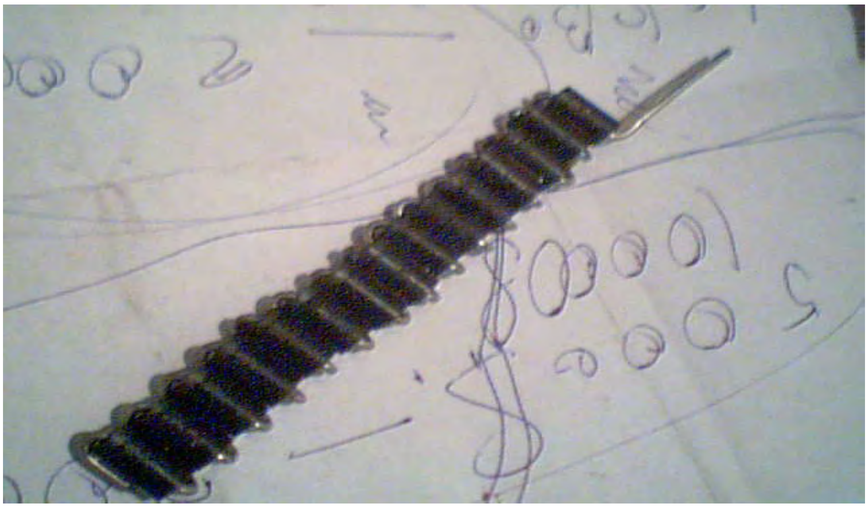

The resonance capacitors (for coils L1, L2) in the primary circuit, need to have a voltage rating of at least 4 kV, the capacitance depends on the frequency of the secondary circuit (28 nF was used by the author for a resonant frequency of 600 kHz). The capacitor must be high quality with minimal dielectric losses and good charge retention.

Usually a composite capacitor bank of low-power capacitors is used. The most appropriate types of Russian capacitors are the K78-2, K78-15, K78-25 or similar types, as these types can easily handle the impulse currents of the discharge.

For the capacitor of the secondary circuit it is better to use any of the above types of capacitors, but the composite voltage must be not less than 10 kV. Excellent working Russian capacitors are the KVI-3 type, or even better, the K15-y2 type.

The secondary coil plus a capacitor form a resonant circuit. The capacitor used in the secondary circuit depends on the desired resonant frequency (the author used a KVI-3 type of 2200 pF and a 10 kV rating).

Here is a photograph of the capacitor used in the secondary circuit:

The high-frequency smoothing choke was used, wound in such a way as to get the minimum value of stray, parasitic capacitance in the inductor windings. The inductance range of this inductor is 100 - 200 micro-Henry, and using a partitioned winding helps to keep the coil capacitance low. The wire diameter to use is 1.5 to 2.0 mm enamelled copper wire. Here is a photograph of one implementation of this choke:

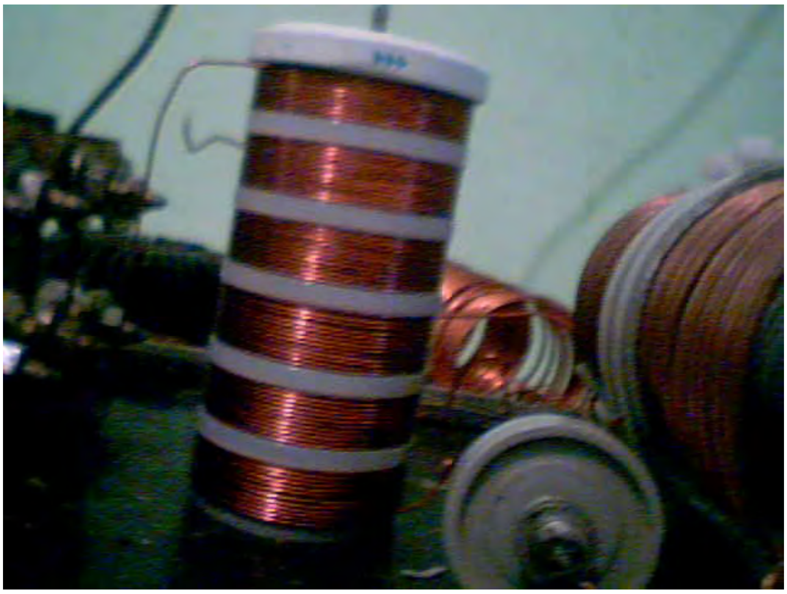

These windings can be made on a PVC pipe with a diameter from 50 mm to 75mm.

For the storage capacitor bank you can use capacitors with a voltage rating of anything from 5 kV to 15 kV with total capacity of about 2 microfarads. Suitable Russian oil-filled capacitors, include all types of K41-1, K75-53 and others. This is the circuit diagram of the device:

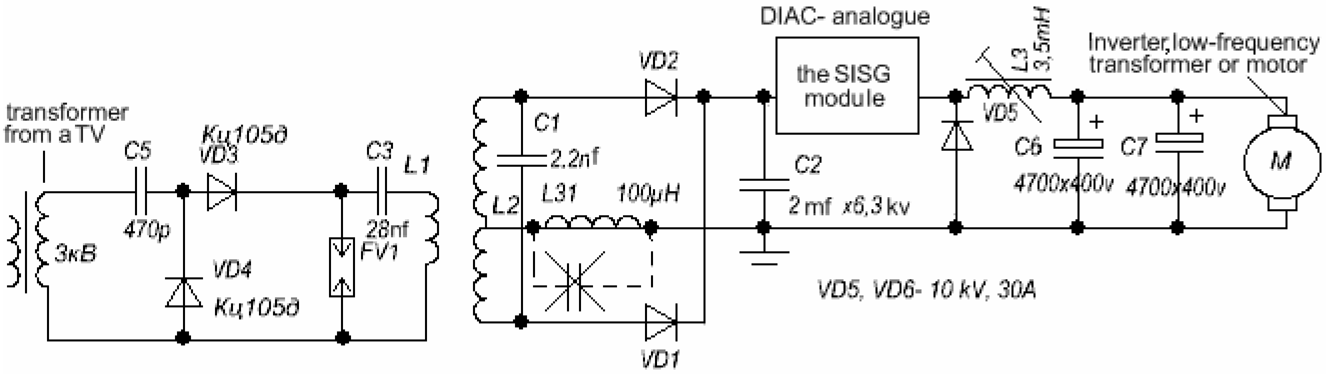

Diodes VD1, VD2 – high-voltage composites.
Diode VD5 needs to be an ultrafast type rated at 1200 V, 30-150 Amps.
Choke L3 is any kind with an open magnetic core, wound with wire of not less than 6 sq. mm., and giving a 1.5 milli-Henry inductance.
The load (an inverter or a DC motor) requires a low input voltage of 12V to 110 volts (lower voltage - high power output)

When building and experimenting be sure to take all Safety Precautions as you will be working with more than 1000 Volts.

Video Links showing this device running an angle-grinder and an electric motor are:

http://www.youtube.com/watch?v=NC3EYDYAXDU #
http://www.youtube.com/watch?v=-sckdMe3HCw#
http://www.youtube.com/watch?v=OaqZ52dGMn4#

The “SISG” module shown in the circuit above is an attempt to build a solid-state version of a spark gap. In this version of Don Smith’s designs by ‘Dynatron’ he wanted the equivalent of a diac or a dinistor. A dinistor is basically a thyristor or SCR without the gate. It starts conducting very suddenly if the voltage on it’s terminals exceeds it’s design value and it stops conducting if the voltage drops to almost zero or the circuit is disconnected, forcing the current to become zero. Diacs or dinistors are hard to find for very high voltages over 5000V, so Dynatron tried to build equivalent circuits which could be used at high voltage and any one of those designs is what is indicated by the box marked “SISG”.

Sergei’s Dynatron circuitry

Russian experimenters are well advanced in their investigations of this type of circuitry. Here is an attempted translation from Russian to English, made, I believe by the energetic forum member “Davi” of Georgia. While I believe this translation to be reasonably accurate, as I can only understand English, I have no way of knowing if it is accurate. The information comes from an interview with Sergei concerning his Tariel Kapanadze style circuitry:

We begin to draw the schematic diagram

We use a line-scan transformer and point-contact diodes.

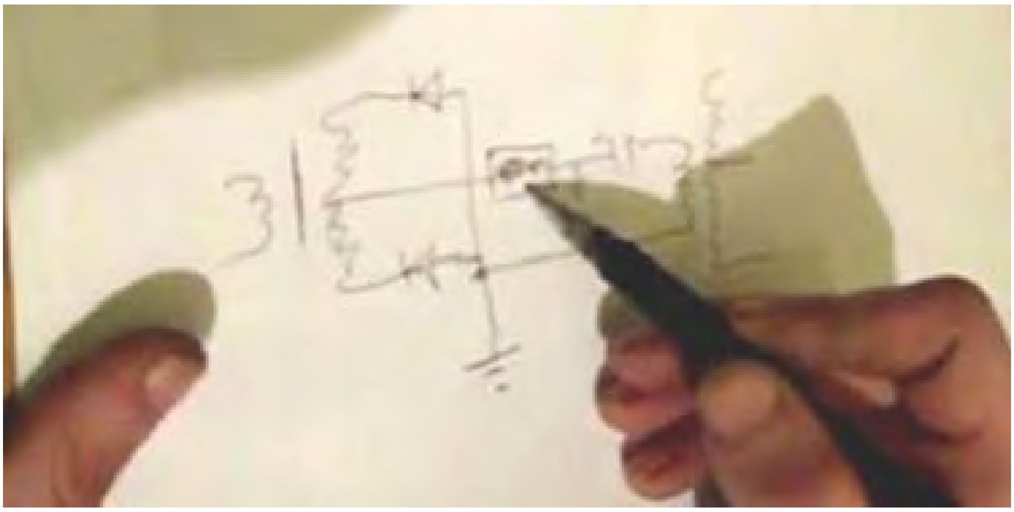

We add in an earth ground, a capacitor, a discharger, and a second transformer winding.

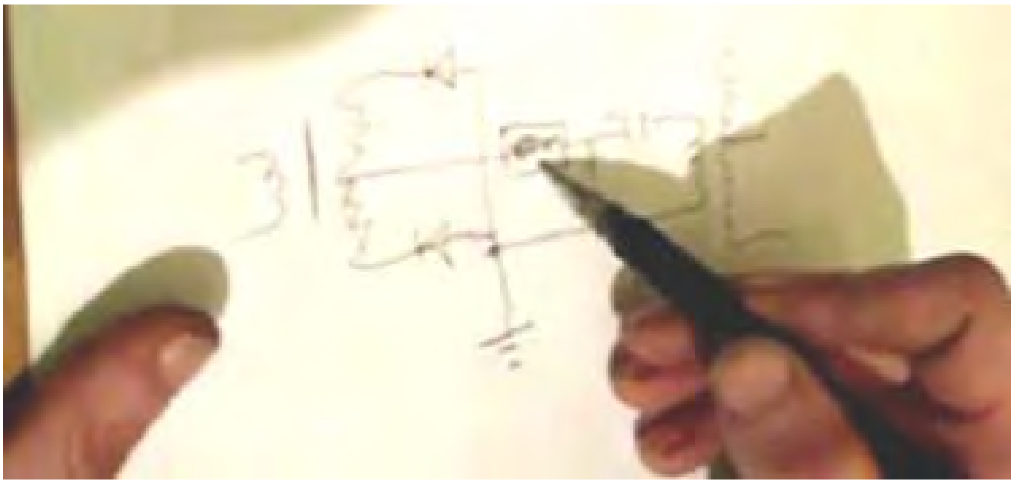

Notice this rectangle.

In the transformer we have an alternating voltage cycles. If we have a threshold voltage -control device, such as a discharger, then positive charges will be pumped from the earth-ground connection, through the diodes. This flow is first, through a one diode, and then through the other diode. That means that the secondary winding of the transformer will accumulate a positive charge. Consequently, you do not need a charged capacitor.   Instead of the spark gap which Don Smith used, you can put a small choke coil of 100-200 millihenrys or a 100 ohm resistor and either of those work just fine. The usual spark gap will work perfectly well but it does not have a long working life. A resistor can be used and it will work. Vacuum or gas-discharge tubes work well. The voltage here is around 1000 volts.

While you can eliminate the spark gap, but when you do have one, the pumping of charges from the ground works better – it turns out to be something like a fork Avramenko plug. The transformer winding acts on the ground charge with the aid of the voltages developed in it.

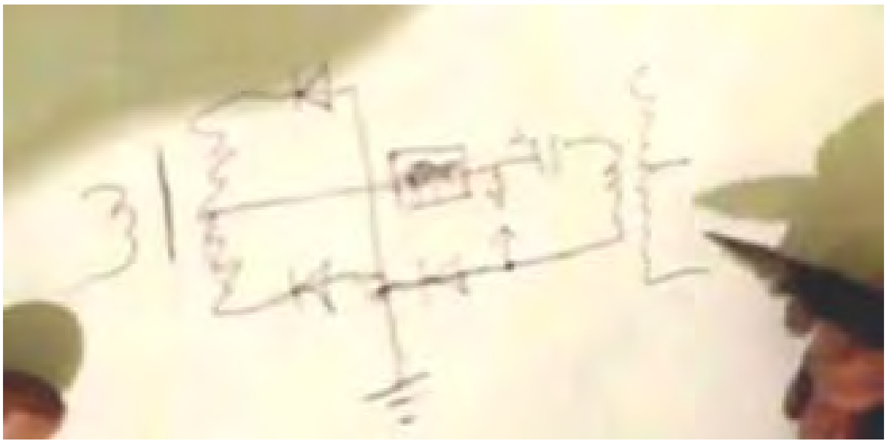

The secondary winding of the resonant transformer, destroys the dipole, according to Don Smith. As he explained, the upper plate of the capacitor develops a high voltage from the charges drawn in through the earth connection. This high voltage is then discharged through a diode or a spark gap.

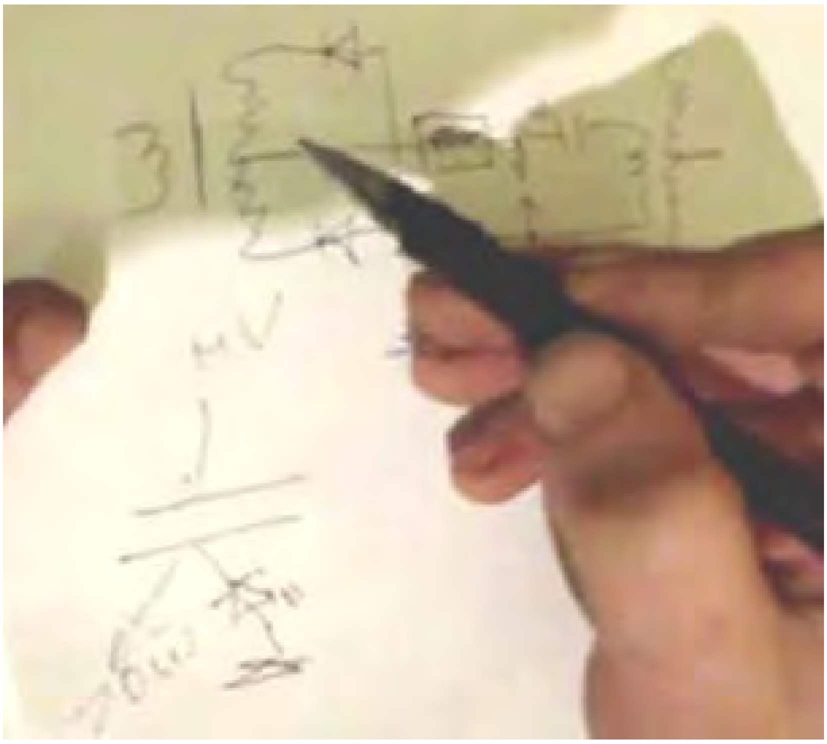

The same thing happens here.

The ground charge enters the secondary winding, and due to it's self-capacitance, accumulates a high voltage on the winding. The diodes used in this location need to be high quality diodes which have a low capacitance. For example, Don Smith used diodes which have a capacitance of just 4 pF.

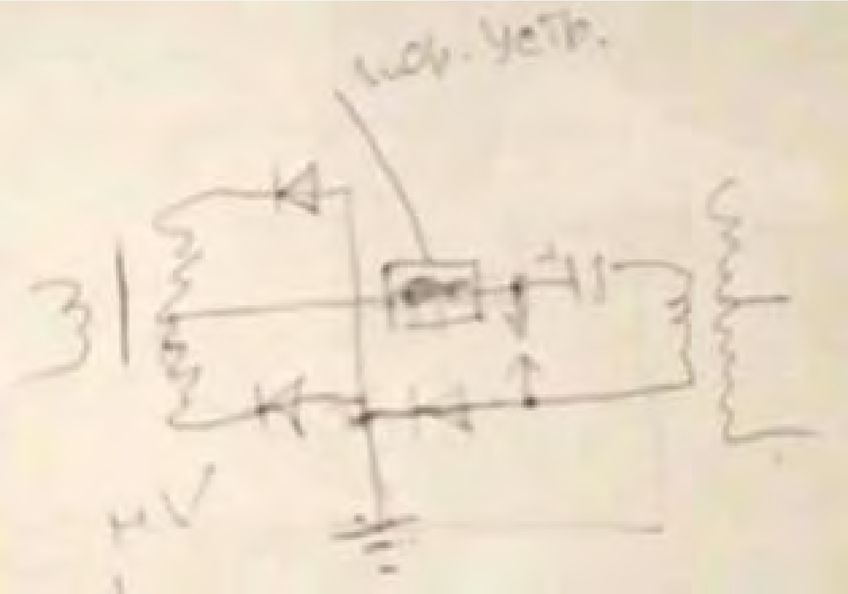

At this point, the pumping scheme will look like this, and I think that it will not change.

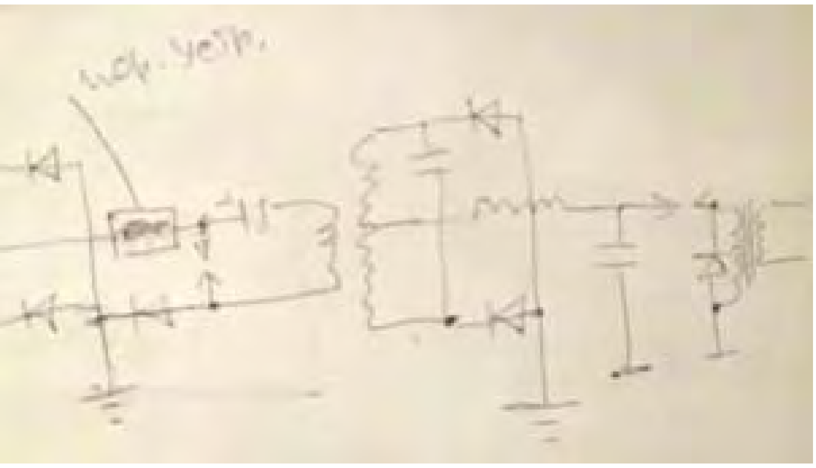

The second coil is exactly the same as the first coil.

For the time delay we use a choking coil. The capacitor is an electrolytic type and we use a spark gap to feed an isolation transformer. To ensure that there will be no feedback of unwanted voltage spikes, we connect a 6 kV 20 to 50 A high-voltage diode in parallel with the primary winding of the isolation transformer. This can be arranged by connecting three 1000V diode bridges together like this:

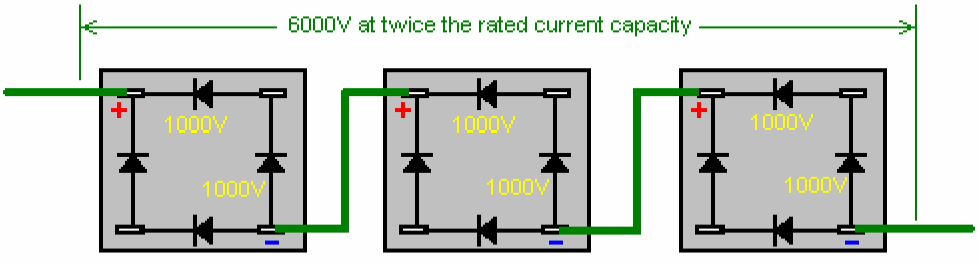

Three 1000V diode bridges can be connected to withstand a voltage of 6 kV.

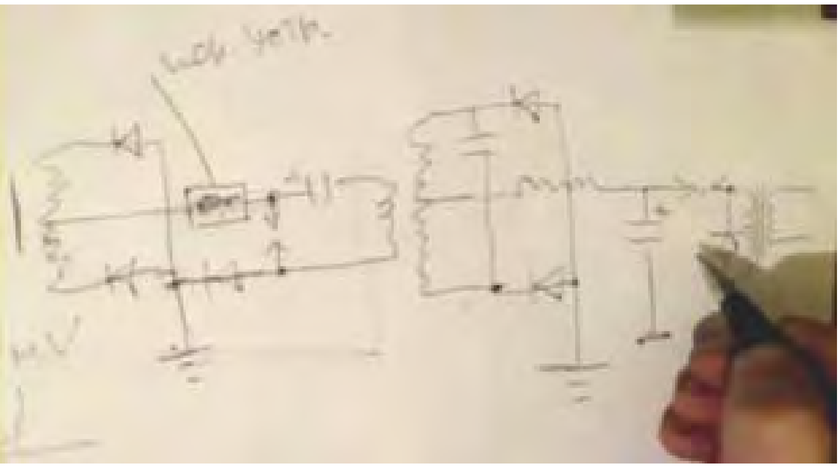

The spark gap is inserted in the positive wire, the same as the first spark gap . Why is this?

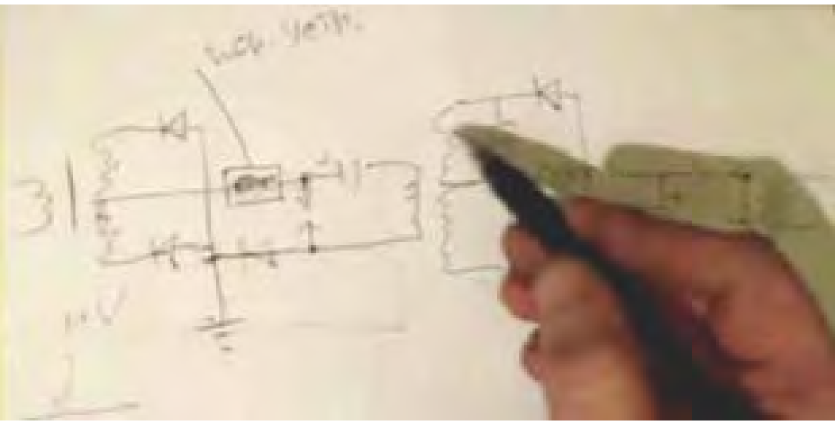

Here we have a separation of electrons.

We collect electrons both from the air and from out of the ground. We push the negatively charged electrons into the ground, and so a positive charge accumulates in our capacitor.

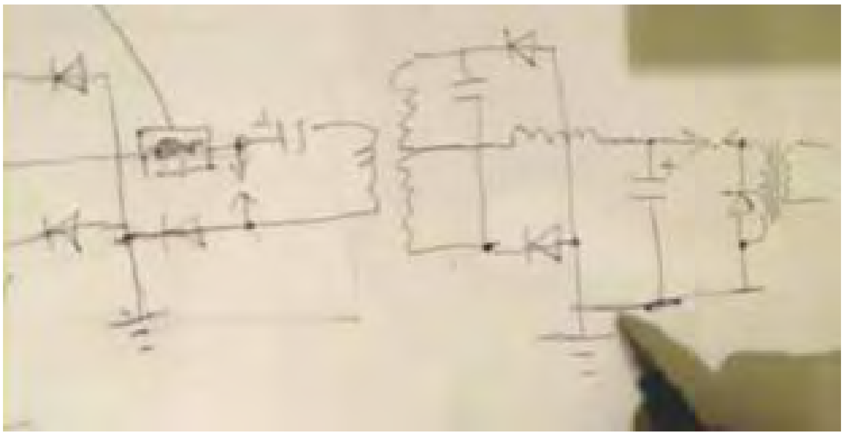

The ground wire carries the negative charges into the earth (which is an expansion tank).

If you connect the spark gap between the earth and the upper end of the transformer which is positively charged, then the primary winding wire will get warm, and the efficiency falls. When correctly connected the primary winding can be constructed with wires which are 0.5 -1.0 mm diameter and the wires remain cold.

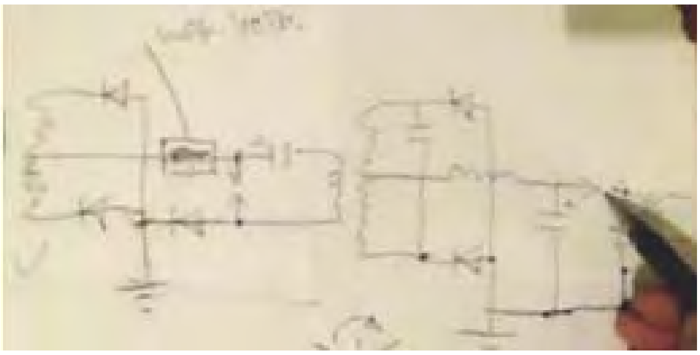

If we have achieved the splitting of the electron-positron pair, then if you put them in a discharger, or in a transistor, or whatever, only the radiation remains. However, the really important fact is that the magnetic component passes through the primary winding of the transformer, and it induces a strong magnetic field in the secondary winding.

Don Smith said that if you connect two batteries together and one is say, 30 volts, and the other 10 volts.
The 30-volt battery passing 10-volt, the electrons in each battery resist each other. It appears that they do not "like each other" if one can describe it that way.

The same thing happens in an ordinary transformer. The current flowing in the secondary winding resists the flow of current in the primary winding - back EMF. But the following question is relevant: at the instant when the negative ion-electrons just start to flow in the primary winding, the interaction between the primary and secondary windings is absent. Because of this we get a huge load-carrying capacity in the secondary winding, practically without changing the inductance of the primary winding, well, if it is changed then that will be not more than 10% to 20%.

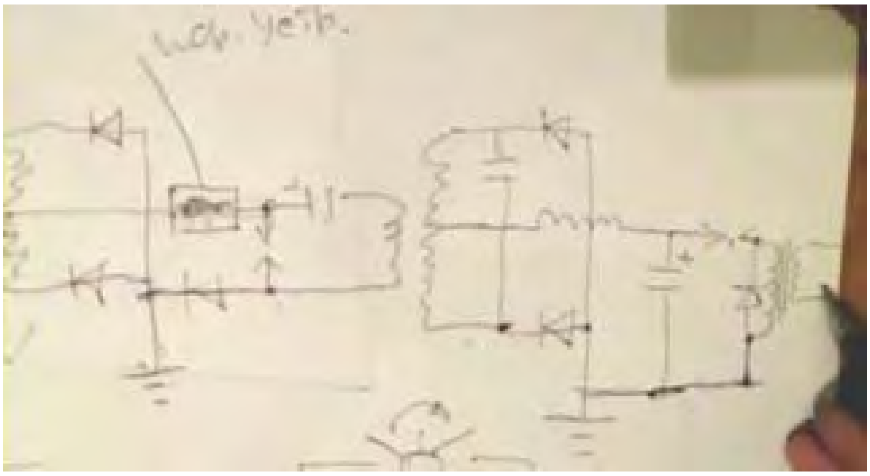

Generally, the minimum load impedance will kill the inductance causing the frequency to change. But this does not happen here, because the primary current flow is of another kind, which is not affected by the current flowing in the secondary winding. That is, moving a small number of electrons in the primary can cause a large number of electrons to flow in the secondary winding. The thicker the wire of the secondary, the more excited electrons there will be there and so, the greater the current flow in the secondary.

The mass of the secondary electrons does not depend on the mass of the primary electrons.
The diameter of the secondary winding is not limited. For example, if you use a 110 mm. tube for the secondary, then the velocity of the electrons flowing through the winding will be the same as if it were wound with a wire diameter of just 1 mm or 2 mm. This is because the current flow is not impeded by the resistance.

The magnetic field of the secondary winding does not interact with the magnetic field of the primary winding. However, the primary magnetic field accelerates the electron moving in the secondary winding, i.e. This produces an asymmetric transformation.

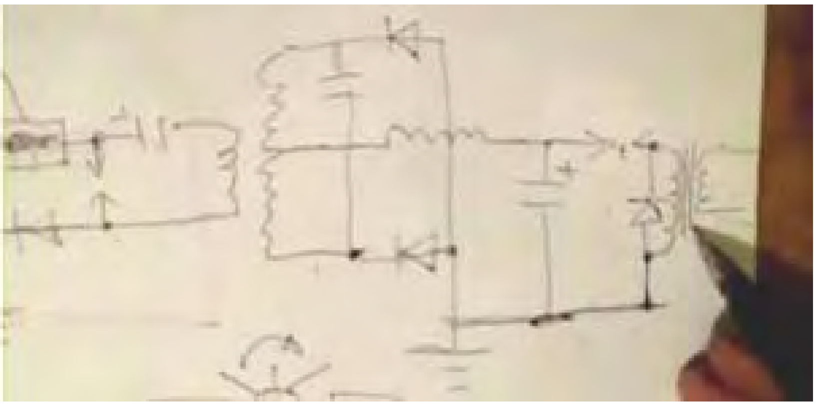

Naturally, here we need very good insulation.

Roughly speaking, if there is a small hole in the wire insulation, then the vaporous electrons in the primary winding will hold the equivalent vaporous electrons in the secondary winding, and that will squeeze the heavy electrons in the secondary winding. Consequently, there must be an anti-static screen in the form of a coil, or aluminium foil that is connected to ground.

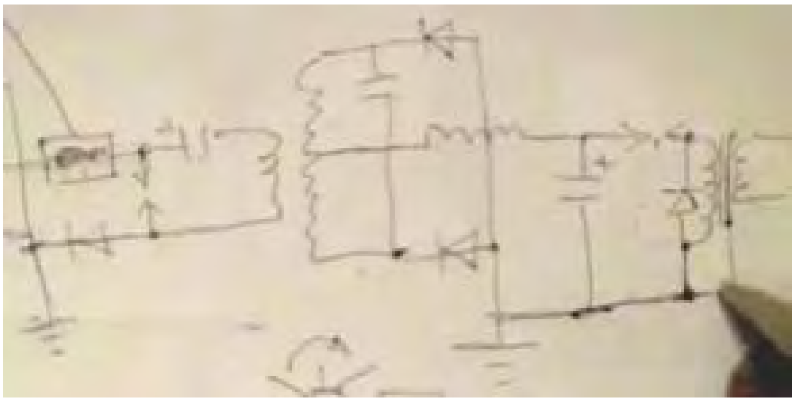

So, all the positively charged particles should go into the ground

If you want to ground the output transformer, then do it through a resistor connected to a ground point which is at least 10 metres away from the first grounding point in the circuit. The farther apart the grounding points are, the better, say, 10 to 30 metres apart. In principle, the length of the ground between the two ground connections can be considered to be an isolation capacitor between those two points in the circuit.

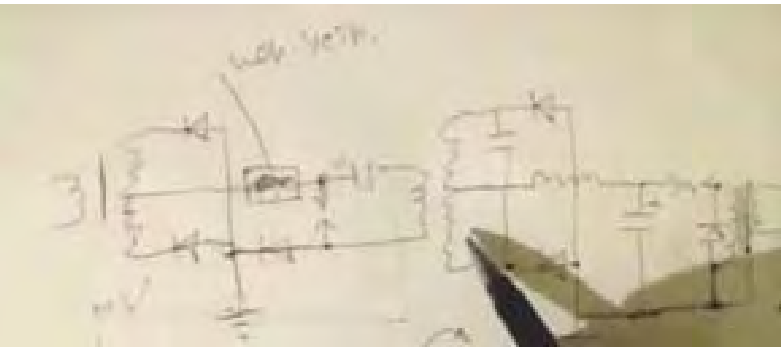

The big question is, of course, what should be the ratio of the primary winding turns to the secondary winding turns - 1:4 ? but here is some good advice:

Accurately measure the total length of the secondary winding and make the primary winding wire length exactly one quarter of the wire length of the secondary winding. The connecting wires are not considered in this measurement, and it is better to make them thinner. If, for example, the primary wire has a cross-sectional area of 8 sq. mm, then make the connecting wires 2.5 sq. mm. in cross sectional area.

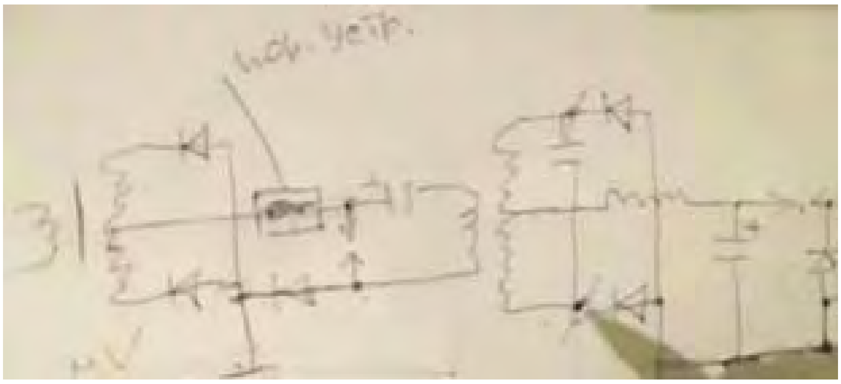

In other words, here are the terminals of the secondary winding.

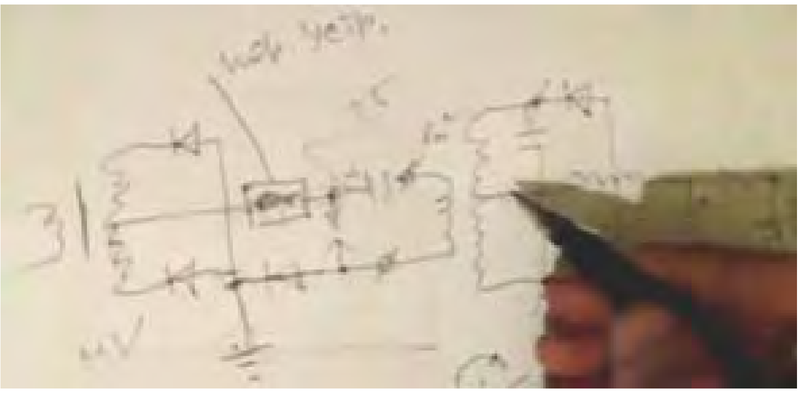

The oscillation amplitude increases massively at the resonant frequency. Why is that?

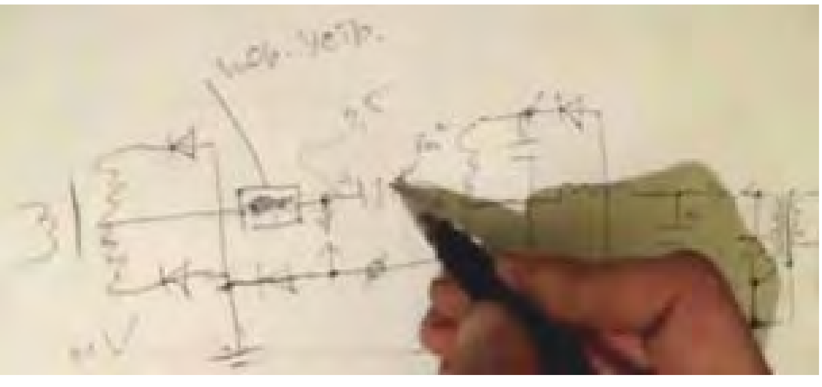

Because of the change in impedance at the junction between the two wires, the connection becomes a node and this is reflected in the anti-nodes, and the primary waveform remains a standing wave.

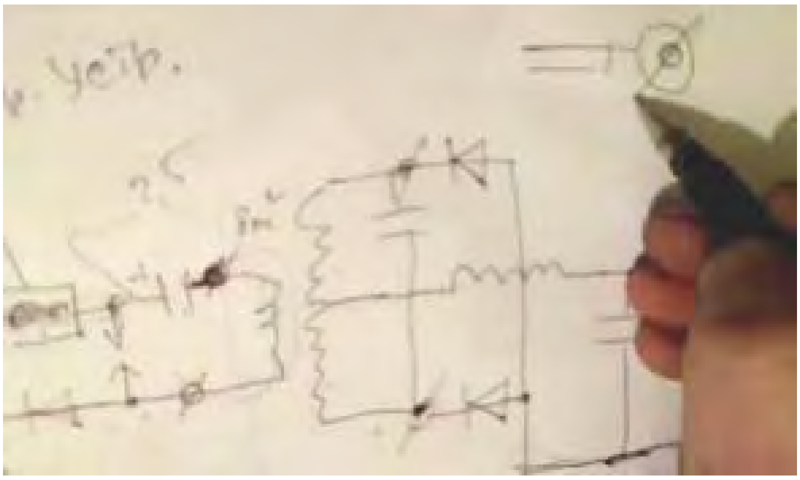

You will recall that Don Smith used a very thick cable but he reduced it to become a thin connection at each end. That thick-to-thin change causes a reflection of the wave. The secondary winding has LC resonance but the inductor depends on it's wave resonance length.

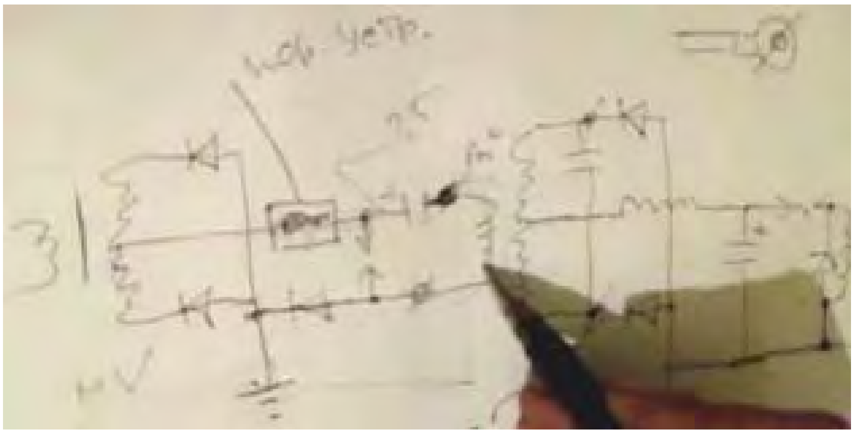

In fact, what we have here is a Tesla transformer, i.e. voltage, current.

You will recall that even in the green box of Tariel Kapanadze with it's thick pipe coil, that thin wires go from the pipe to the spark gap. Changing the impedance of the wire at the junction between the two different cross-sectional areas - That's it! That raises the efficiency, and so the spark gap works better.

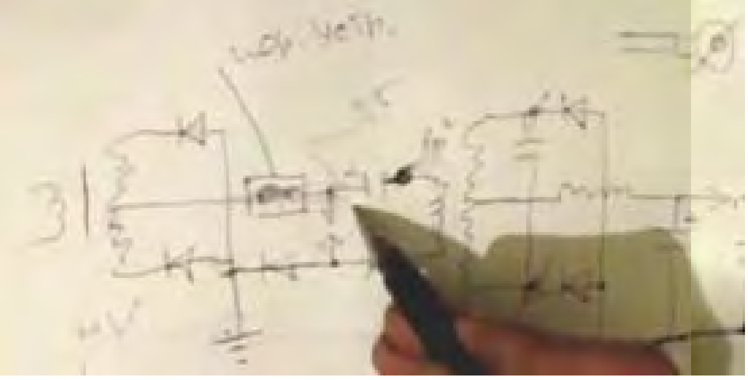

Ideally, you want to use a vacuum spark gap.

Unfortunately, our spark is not dispersed in the secondary winding. The spark might be triggered at anything from 50 kV up to 100 kV. We have a great 'Q-factor' (coil 'Quality' factor) in our winding! However, once the spark has occurred we get a roll-back of current moving in the reverse direction through the winding, although it is always less powerful than the forward action. This reverse pulse also passes through the spark gap, effectively shunting, the input circuit and so, decreasing the output Q of the circuit. The circuit's output voltage is reduced. The resonant frequency drifts and so the output power drops. Although this effect can be seen when using an air gap, it is much better to use either a vacuum spark gap or a spark gap which is enclosed in a tube filled with hydrogen gas.

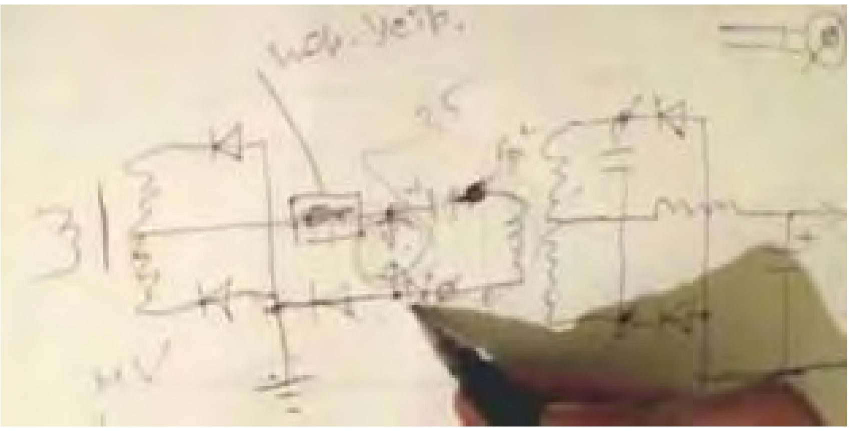

You can put a diode in series with the spark gap.

If that is done, then the reverse current will not pass. The diode must be able to withstand a reverse voltage of 10 to 20 kV. We ordered a hydrogen diode with power handling capacity of 120 watts. It's turn-on time is 0.1 ms, off time is less than 1 ms. We connected the current transformer using 24 ohm resistor.   The result was a pure current transformer on the load, and without any interference. Let's see what we have done on the discharger. Take a look - the spark gap was lit up with a blue colour.

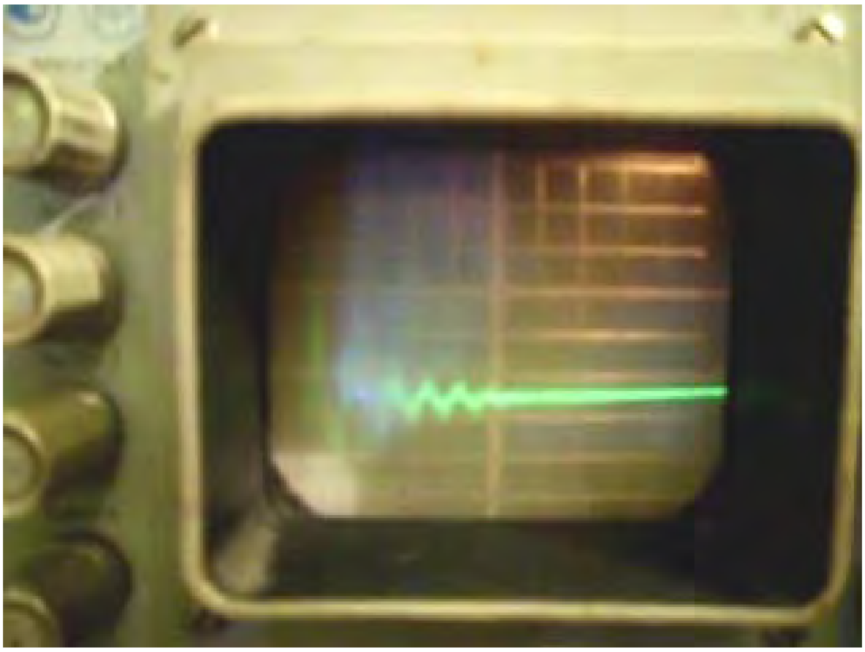

On the oscilloscope, we see dampened oscillations.

There must be only one oscillation, and the remaining excess. The 5 extra vibrations short-circuit the secondary winding, and prevent it from operating normally.

Ideally, this should be simple.

Clicking the inductor - capacitor recharges, but the current does not go back. (it stops at zero)
Picture voltage "U".
Picture current "I".
That is how such a process should be, but otherwise - buffeting vibration. (need a hydrogen diode)

Isolation transformer.

The isolation transformer is made up of rings. The primary winding is 2 bifilar layers wound in one direction. The secondary winding is with wire which has 10 sq. mm. cross sectional area, but today we will rewind it. The screen is made of foil - ordinary Scotch tape. But the screening must not form a complete turn as it must not be a closed-loop. Here, aluminium Scotch tape is used. Now short-circuit the secondary winding, and enable the device.

We check with a screwdriver, and there is practically no output. If you add an anti-static barrier, i.e. gasket between the primary and shield. It should be made from a good insulator, such as PTFE. It is possible to use cellophane which, being like acrylic is also a very good insulator. I shorted outputs, so as not to clatter. If you remove the jumper, the coil is bursting with no load like this. (We hear a crash, and after 3 seconds it stops) Sergey: We'll see what it was. (Blue spark coil pierced).

That's it! The experiment’s completed. Blown diode bridge - Accident. Accidentally shorted to ground. Well, that's all. It is desirable, of course, have a good ground connection. The threshold-limiting device is a choke.

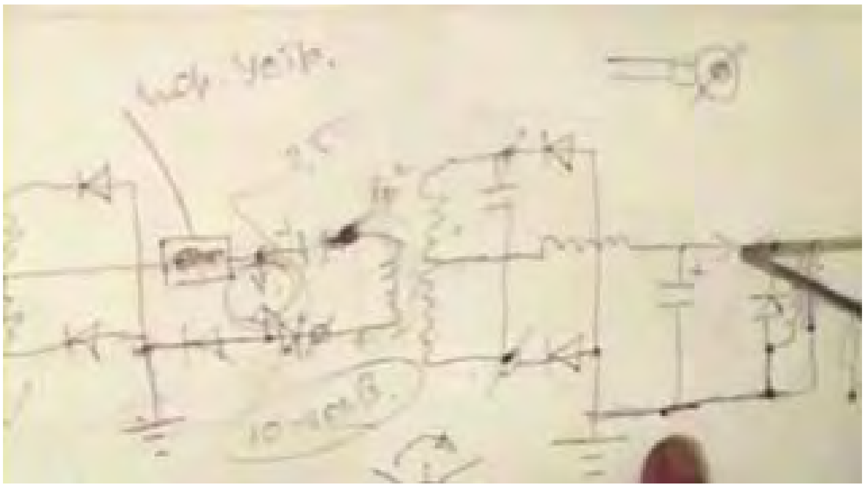

What can I say?

In principle, you can use the CISC module instead of a spark gap. In this circuit, the very sharp rise time of the driving waveform pulse fronts is not necessary, because the inductance is large.

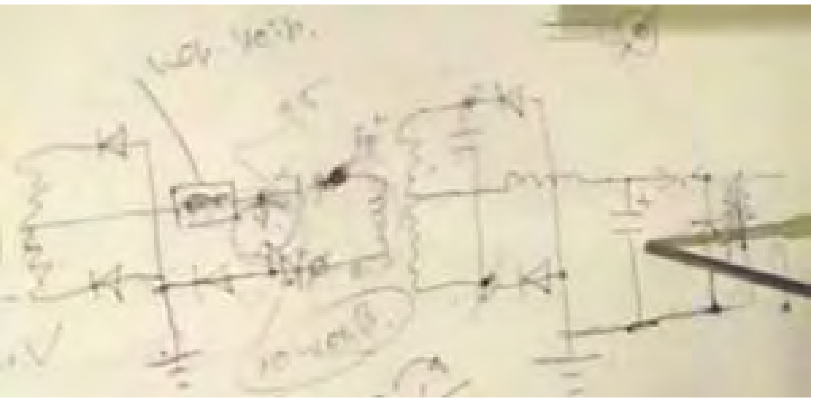

If the transformer has an iron core, then the rate of charging of the capacitor will be very fast, at, for example, 50 Hz. At that low rate, you can omit the discharger. In Don Smith's design where a neon tube driver is used, a diode and even a diac can be used instead of a spark gap. It will even work with a direct connection.

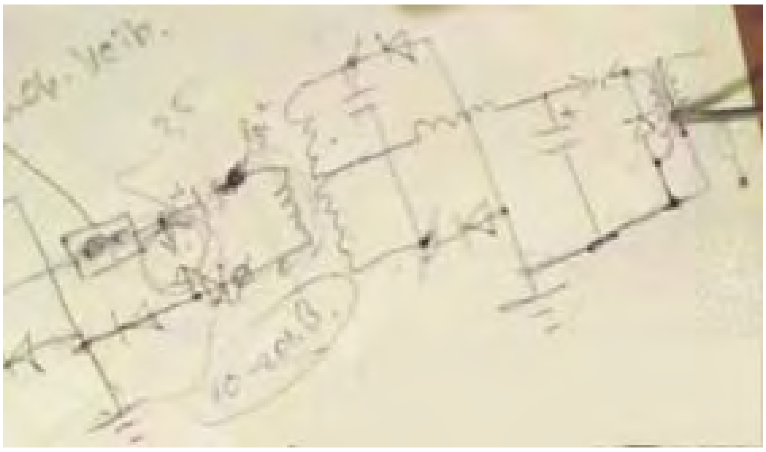

Then the impulses are often, but with smaller amplitude. Naturally, the better, when we divide the frequency, i.e. for two of the primary pulse charges the capacitor of the secondary.

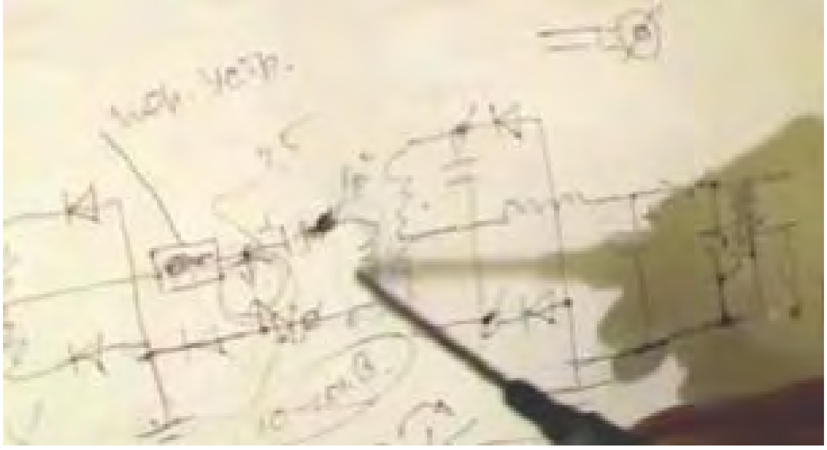

Then the amount of energy in the pulses is summed.

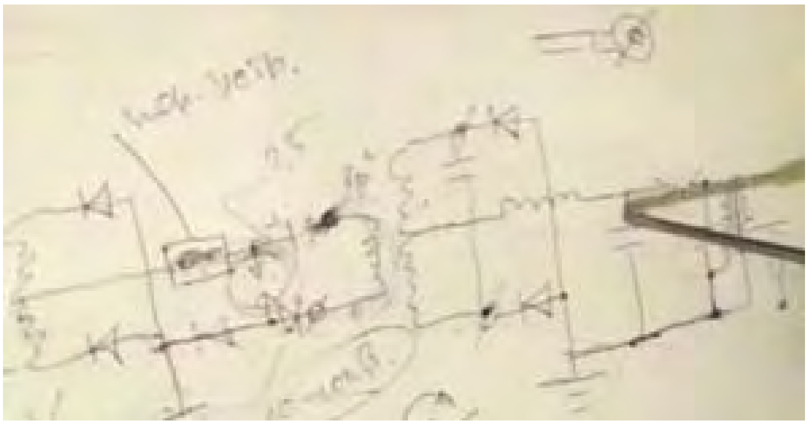

Here they are superimposed on one another, in a linear fashion.

C = Q/U end U = Q/C

The capacitance is a constant. If we increase the number of charging pulses per second, then because the secondary coil at resonance increases the amplitude of the pulses, we get increased power. At 5 times more power, because there are 5 times the number of charging pulses passed to the capacitor, we get a squaring of the voltage-energy. That is an energy increase of 25 times.

Raising the spark frequency by, say a factor of 10, will give an energy gain of a factor of 100.

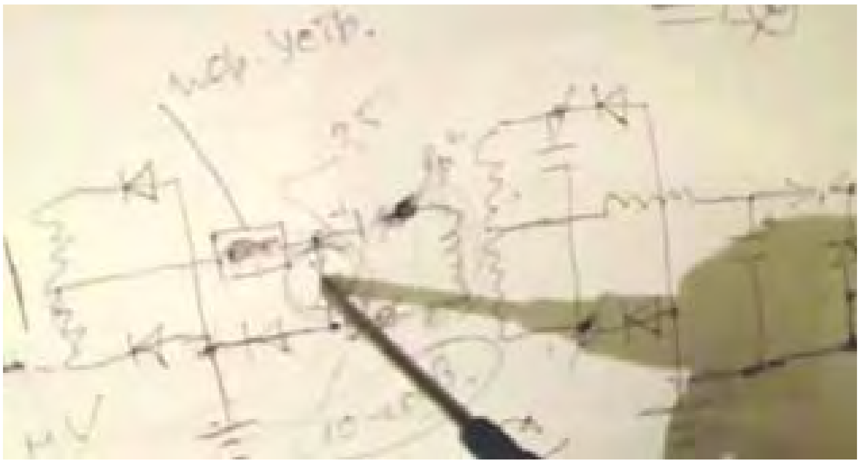

Well, I'm telling you, place a spark gap here in order to – INTERRUPT. Otherwise, the inductor will not be able to speed up and pass more pulses into the capacitor.

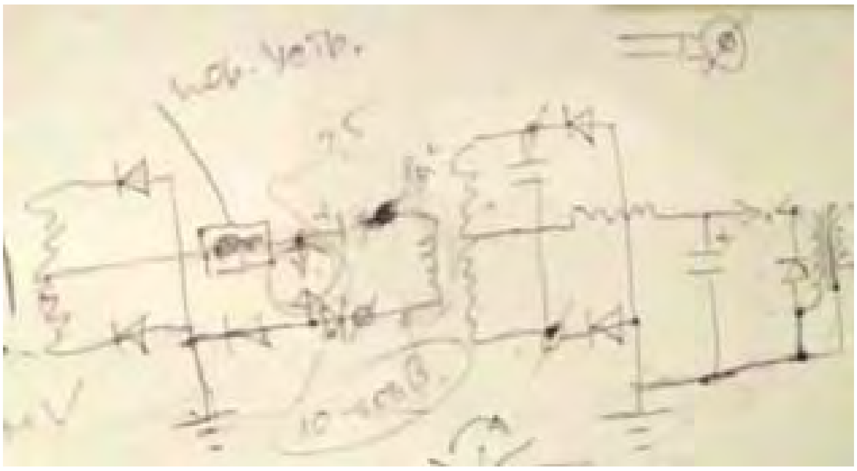

Gentlemen!   Make it and test it.

The Rosemary Ainslie Energy-Collection System

For many years now, people studying science-related subjects in universities around the world, have been told things which are at best, out of date, and at worst, deliberately incorrect. For example, a common starting point for analysis is to assume "a closed system" although it is perfectly clear that there is no such thing on the planet.

With few exceptions, calculations are generally based on the assumption that energy does not flow into a system or a device from the outside. The influence of sunlight is one of the few external inputs recognised, and it's effect on solar panels, producing rainfall, causing winds, etc. are admitted because these things are so obvious to the average person that there is no denying them.

These same people fight tooth and nail to persuade people that "space" is empty and that there is nothing in it. This is, of course, ridiculous, since light passes through space, as do radio waves, X-rays, cosmic particles, and other things. It is certainly a weird notion that distant objects can affect each other if there is absolutely nothing in between them. It would be a neat trick to explain the effect of gravity if there is absolutely nothing in the gap between them.

The matter has long since left the realm of common sense as the British scientist Harold Aspden has demonstrated with laboratory measurements, the presence of an "unknown" field which acts like an incompressible gas. What his work has demonstrated is now known as "the Aspden Effect" and the experimental results are as follows:

Harold was running tests not related to this subject. He started an electric motor which had a rotor mass of 800 grams and recorded the fact that it took an energy input of 300 joules to bring it up to its running speed of 3,250 revolutions per minute when it was driving no load.

The rotor having a mass of 800 grams and spinning at that speed, its kinetic energy together with that of the drive motor is no more than 15 joules, contrasting with the excessive energy of 300 joules needed to get it rotating at that speed. If the motor is left running for five minutes or more, and then switched off, it comes to rest after a few seconds. But, the motor can then be started again (in the same or opposite direction) and brought up to speed with only 30 joules **provided** that the time lapse between stopping and restarting is no more than a minute or so. If there is a delay of several minutes, then an energy input of 300 joules is needed to get the rotor spinning again.

This is not a transient heating phenomenon. At all times the bearing housings feel cool and any heating in the drive motor would imply an increase of resistance and a build-up of power to a higher steady state condition. The experimental evidence is that there is something unseen, which is put into motion by the machine rotor. That “something” has an effective mass density 20 times that of the rotor, but it is something that can move independently and take several minutes to decay, while the motor comes to rest in a few seconds.

Two machines of different rotor size and composition reveal the phenomenon and tests indicate variations with time of day and compass orientation of the spin axis. One machine, the one incorporating weaker magnets, showed evidence of gaining strength magnetically during the tests which were repeated over a period of several days. This clearly shows that there is an unseen medium which interacts with everyday objects and actions.

Bob Boyce of the USA developed a toroidal transformer pulsing system which he uses for the electrolysis of water. His system is notable for the fact that he gets efficiency levels more than 1,000% that of Michael Faraday who set the standard for university teaching on the subject. One of the most likely explanations for this seemingly massive outperforming of Faraday's maximum possible gas output results is that Faraday was perfectly correct and excess energy is flowing into Bob's system from the outside.

There is extremely strong evidence that this is so, because five independent experimenters have demonstrated this inward energy flow, using Bob's toroidal transformer to charge batteries. One man who lives in South Africa has a young daughter who drives her small electric car around each day. The car is powered by one 18 Amp-Hour lead-acid car battery. There is nothing unusual about this as these miniature cars are readily available around the world. There is also nothing unusual that the child's father charges up the battery overnight, so that the little girl can drive around the next day. What is most unusual is the fact that the battery charging is powered by the battery which is being charged. According to university teaching, the charging is a "closed system" and so it is not physically possible for that to happen.

The little girl does not know this and drives around happily each day. The battery in her car has been recharged this way more than thirty times. This would appear to be direct evidence of energy flowing into the charging system from the outside. Achieving this is not an easy thing to do, quite apart from the fact that most sensible people are very reluctant to have the output of any system fed back to the input of that same system as that is positive feedback which easily leads to power runaway. The preference is to have one twelve volt battery charge a separate forty-eight volt battery bank because doing that avoids any possibility of excessive feedback.

As with most systems, the practical details are a key feature. In this case, the toroid is a MicroMetals 6.5 inch iron-dust toroid which is precision hand-wound with three separate windings of solid, silver-plated copper wire with a teflon covering. These three windings are pulsed in turn with a complex waveform signal, creating a high-speed rotating magnetic field which has no moving parts. A rotating magnetic field like that has long been known to produce excess power with a RotoVerter system constructed from two off-the-shelf 3-pahse motors, having a power output well in excess of the power input needed to make it run.

This inflow of outside power is a feature of Rosemary Ainslie's heating system. Rosemary has designed and laboratory-tested a heating system which can have substantially more output power then the input power needed to run it. She achieves this by pulsing a heating element in an unusual way using this circuit:

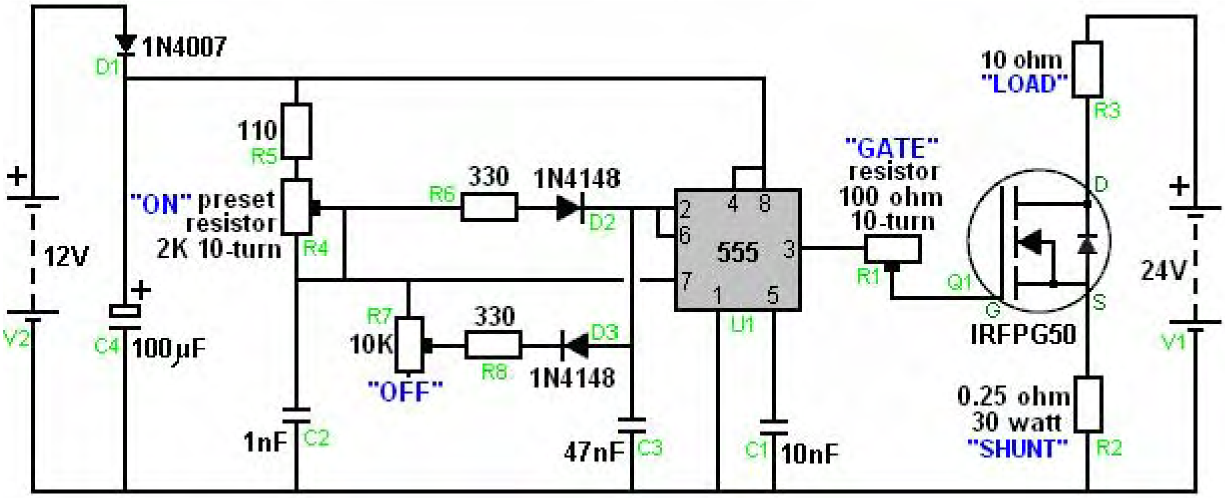

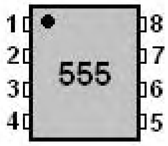

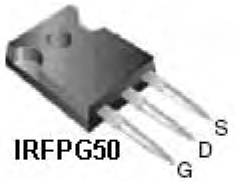

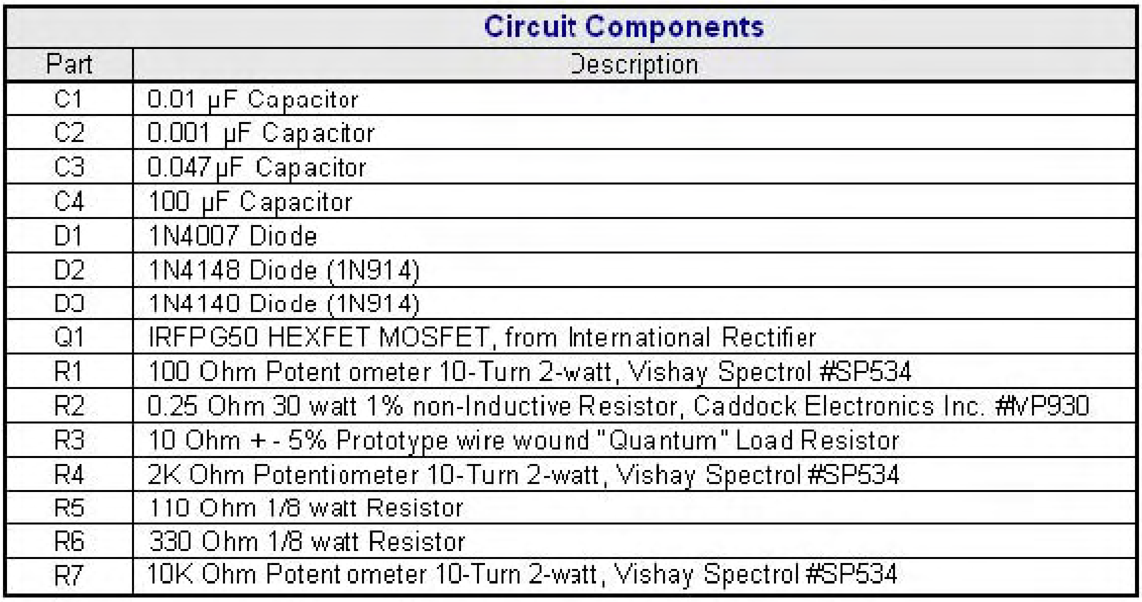

Circuit Components	
Part	Description
C1	0.01 µF Capacitor
C2	0.001 µF Capacitor
C3	0.047µF Capacitor
C4	100 µF Capacitor
D1	1N4007 Diode
D2	1N4148 Diode (1N914)
D3	1N4140 Diode (1N914)
Q1	IRFPG50 HEXFET MOSFET, from International Rectifier
R1	100 Ohm Potentiometer 10-Turn 2-watt, Vishay Spectrol #SP534
R2	0.25 Ohm 30 watt 1% non-Inductive Resistor, Caddock Electronics Inc. #MP930
R3	10 Ohm + - 5% Prototype wire wound "Quantum" Load Resistor
R4	2K Ohm Potentiometer 10-Turn 2-watt, Vishay Spectrol #SP534
R5	110 Ohm 1/8 watt Resistor
R6	330 Ohm 1/8 watt Resistor
R7	10K Ohm Potentiometer 10-Turn 2-watt, Vishay Spectrol #SP534

Most circuits which draw energy in from the local environment, generally need to be tuned to achieve resonant operation. It is also found that a waveform rich in harmonics is needed to produce the best results. For example, Ronald Classen recently produced an analysis of the operation of Bob Boyce's electrolyser toroid pulsing. Bob's circuit generates three separate waveforms, one at about 42.8 kHz, and two harmonics, one at around 21.4 kHz and the other at about 10.7 kHz. He examined the operation with the two harmonics slaved exactly to the master frequency and then with the two harmonics free-running and not quite synchronised, so that a random pattern of harmonic pulses were generated. Surprisingly, he found that the random arrangement gave much higher gains than the "precision" circuit.

The same sort of situation is found here in the Ainslie circuit as very precise adjustment of the "Gate" preset resistor "R1" has a major effect on the circuit performance while the other two, R4 and R7, are used to adjust the frequency of the pulses and the ratio of "On" time to "Off" time. Like almost every other circuit which produces a greater power output than the input power required to make it operate, very careful adjustment is needed. The characteristics of the "Load" heating element "R3" are also very important. With some configurations, there is no excess power generated, while with others there is a very marked increase in power and the prototype apparatus produced power outputs in excess of four times the input power.

A quick glance at the circuit diagram makes it appear that there is no significant connection between the NE555 timer chip and the IRFPG50 FET transistor. This is not the case as the arrangement as shown generates transients which modify the oscillation of the NE555 chip. This is presumably due to the nature of the current draw by the gate of the FET or through induced currents caused by the pulsing of the inductive load heater coil "R3". We tend to think of FET transistors as having next to no current flowing into the gate, but the IRFPG50 FET can draw up to a massive 6 amps for the Gate to Source current flow. The NE555N chip supplying that gate current (with no current-limiting resistor between the two devices) can supply a maximum of only 200 mA (or possibly 300 mA at a push) which is only 5% of the possible current draw by the FET. The circuit of the NE555N chip is:

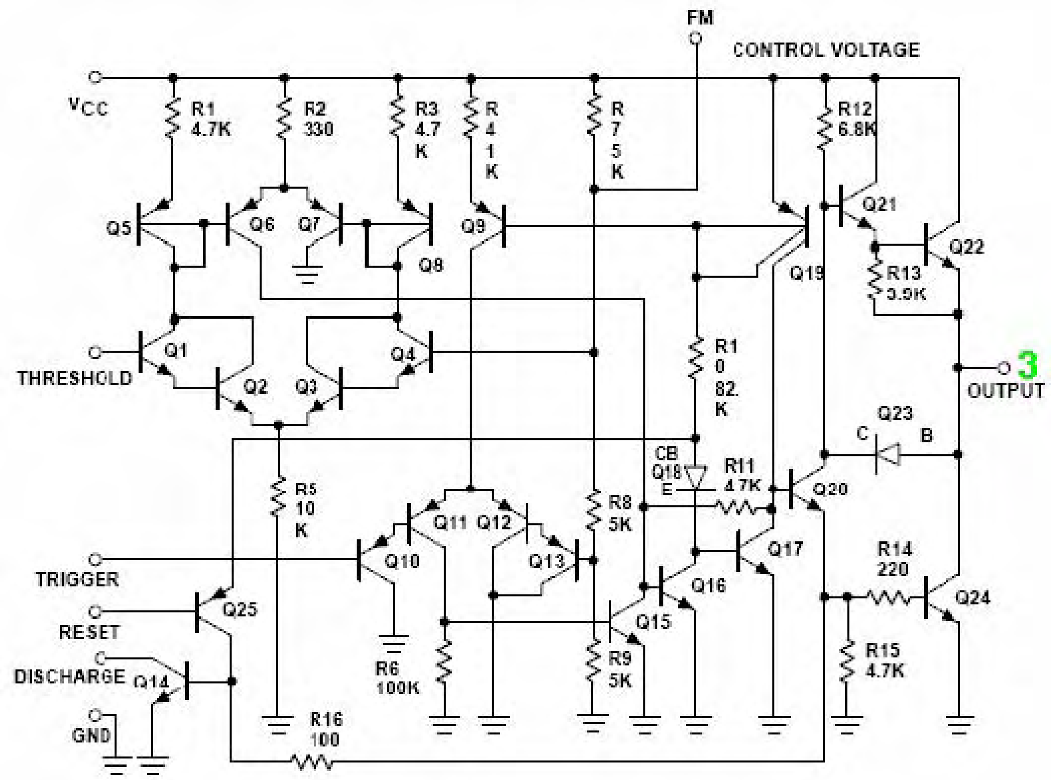

From this it appears that the direct coupling of the output could allow some modification of the chip timing and waveform if the output current draw is well above the design value, the internal resistors preventing destruction of the chip and reducing the effect so that it just modifies the functioning of the chip.

This is also suggested by the fact that the adjustment of the "Grid" variable resistor, which controls the NE555N current draw, is the most critical adjustment of the circuit. Supporting that idea is the fact that the required chip operation does not take place if the "Grid" resistor setting is too high or too low. Presumably, the setting has to be an exact amount so that the NE555N chip operation is altered to make it generate waveforms not envisaged by the chip designers. The physical separation of the "Load" resistor and the circuit board may also be important as there is almost certainly a magnetic feedback element as well.

I would love to tell you that the circuit operates in the way that the circuit diagram would suggest, with the timing and Mark-Space values controlled as expected by the 555 chip designers. However, that is definitely not the case. If the 24V battery is disconnected, then the NE555 chip section of the circuit performs exactly as expected. If the "R1" **GATE** resistor is at the correct setting and the 24V battery is then connected, the result is that the normal running of the NE555 chip is overridden and the circuit immediately switches into a completely different type of operation. The Mark-Space ratio is forced into an approximately 55% setting and the pulsing rate is bounced to over 500 kHz (well beyond the capability of the NE555 chip, as many actual chips can't even reach 45 kHz in practice) with this waveform:

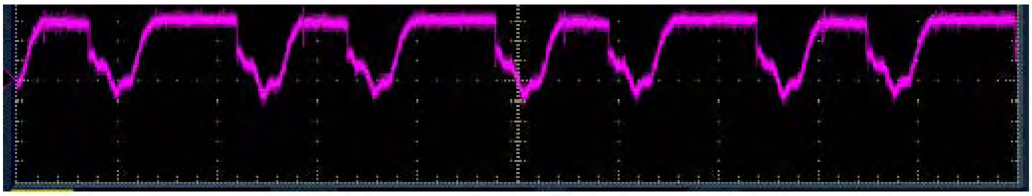

which you will note has repeating pairs of pulses, neither of which is a square wave. The overall circuit is clearly not operating as an NE555 chip circuit any longer but is oscillating in an unexpected way. This high radio-frequency pulsing produces electromagnetic waves which radiate out from the load resistor, an effect which is seen on a nearby television set. This is not really surprising, as the circuit should really be presented like this:

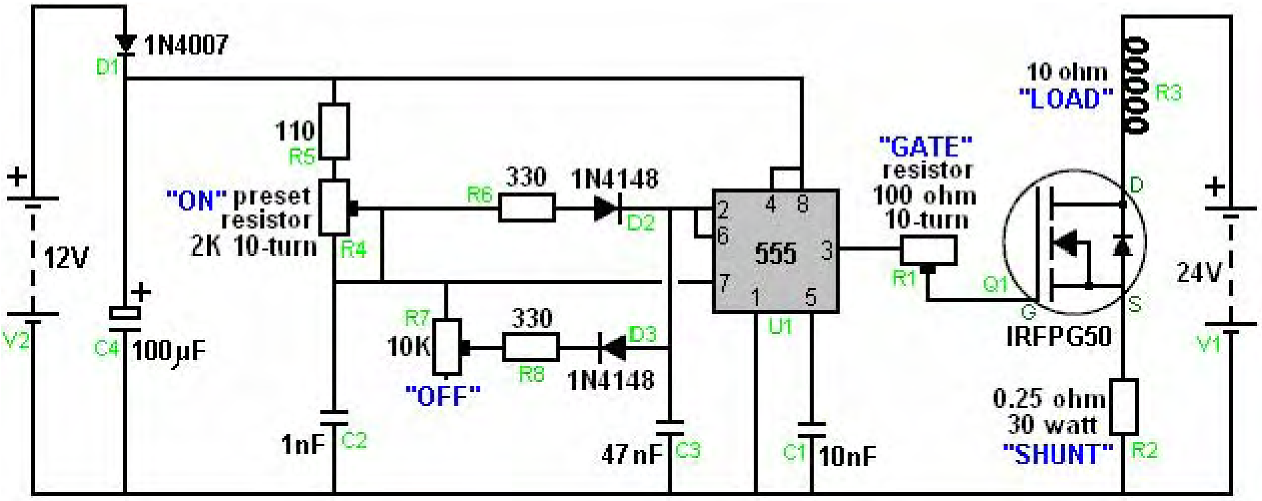

This is because the 10 ohm "resistor R3" is actually a coil of wire. The specification for this component shows that it has a length of 150 mm (6"), a diameter of 32 mm (1.25") and is an air-core coil, wound with 48 turns of resistance wire with a 1 mm gap between each turn. The lack of a core, allows the coil to oscillate at this high frequency, and any coil driven at that frequency radiates radio waves.

It is almost certain that these electromagnetic waves are inducing voltages in the wiring surrounding the NE555 chip circuit, causing it to run wildly outside its design. The wire-wound adjustment resistors are little coils which have the potential for picking up transmitted waves. This pickup mechanism is strongly supported by the fact that only an NE555N chip will operate in this way and three other makes of 555 chip which were tested, failed to produce this runaway action. The higher runaway frequency is important for achieving power gain. Don Smith states that the extra power being drawn into a circuit is proportional to the square of the pulse frequency. If this is correct, then moving the pulse rate up to over 500,000 per second will have a major energy effect and explain why tuning the circuit into this high-speed mode is important.

The practical method of tuning the circuit into its self-oscillating non-symmetrical, power-gaining mode is by monitoring the voltage of the "V1" 24V battery. When the circuit is out of tune, the battery voltage gets pulled down quite noticeably. When the circuit is tuned correctly, there is a slight increase in the battery voltage. If the circuit has been built as described, using an NE555N timer chip and a high inductance load "resistor" coil, then tuning the circuit is performed as follows: Connect a digital voltmeter across the 24-volt power supply and note the exact reading. Set the "ON" preset resistor to its minimum value of zero ohms. Set the "OFF" preset resistor to its maximum value of 10K ohms. These resistors are generally left at these settings throughout.

The "GATE" resistor is now adjusted very carefully, watching the voltmeter reading. As the circuit comes to its best possible tuning, the battery voltage will rise. Pick the resistor setting which gives the highest battery reading. The rise in battery voltage is caused by the inflow of external energy. Some of this flows through the "LOAD" causing heating effects which can be 17 times greater than would normally be expected. Part of the inflowing energy flows back into the power supply, and that flow lowers the current draw from the 24V battery, which in turn, allows it to show a higher voltage reading. This mechanism is exactly the same as described by Tom Bearden when explaining the operation of John Bedini's battery-charging pulse circuits - part into the load and part back into the power supply.

Although it is not mentioned in the Parts List, it is very important to mount the FET transistor on a heat sink as the current flowing through it causes it to heat up. Also important is to use a mica gasket between the FET and the heat sink. A mica gasket is a thin layer of mica which electrically insulates the FET from the heat sink while still acting as an extremely good conductor of the FET heat to the heat sink. This is necessary because the "Drain" pin of the FET is connected electrically to the metal mounting strip of the FET and if the FET is not insulated from the heat sink, then the heat sink acts as a radio aerial and radiates an embarassingly large level of radio waves. The heat sink can be a simple sheet of aluminium, or it can be a commercial finned design of which there are many from which to choose. A suggested physical layout for this circuit is given towards the end of this document, and can be used if you are inclined so to do.

This is a circuit which cries out for replication and investigation by both experienced and inexperienced experimenters. There are no expensive components in the circuit and the circuitry could hardly be any more simple than it is. If this circuit can be scaled up to operate as a household heater it would mean that electrical heating costs could be reduced to a tiny fraction of what they are at the present time. That sort of cost reduction would make a major difference to a very large number of people, which makes this circuit very interesting indeed.

A website which has a considerable amount of interesting information on this design and the history surrounding it can be found at: http://www.free-energy.ws/rosemary-ainslie.html

The operating methods which are used in this style of circuitry are describe in considerable detail in a patent application (WO 99/38247) has been filed for this system. Reading those descriptions can be helpful, so here is a digest of part of that patent:

Patent: WO 99/38247 **Date: 22nd January 1999** **Inventor: Rosemary A. Ainslie**

HARNESSING A BACK EMF

ABSTRACT

A method of achieving high efficiency of energy usage which includes passing current through an inductor, causing the current to be repeatedly interrupted, thereby generating a back EMF in the inductor and thereafter, harnessing the back EMF so generated , to supply energy to an energy-receiving or processing device. The frequency of interruptions should be 40 Hz or more and is achievable by rectifying the current. The invention extends to apparatus for harnessing such back EMF and energy generating means comprising an inductor and a current interruptor connected to an energy-receiving device.

FIELD OF THE INVENTION

The invention relates to a method of harnessing back EMF for use in powering a load or replenishing a depletable energy source and extends to apparatus used in performing the method.

BACKGROUND OF THE INVENTION

Conventional switching circuits are well known in electrical energy conversion technology, and switch mode systems have been employed to enhance energy utilisation efficiencies. The concept of absorbing electrical energy released by the collapse of auto-electronic emissions from a discharge tube is disclosed in US 5,449,989. This document discloses a circuit which includes an output port connected to a current sink which is able to absorb at least a substantial portion of such emissions. The current sink may be an electric motor or a secondary battery.

The concept of applying a back EMF in electrical circuitry is also known. For example, in US 5,521,476 there is disclosed a control circuit for a disc drive motor, in which back EMF blocking circuitry is employed to prevent dissipation of a back EMF through a power supply. By contrast, publication WO 9,613,892 discloses the use of a back EMF to trigger a response in a control system for a mechanical system, so that driving pulses are generated to accomplish a desired displacement motion.

In the present invention, to achieve high energy efficiencies, greater than unity in relation to a conventional test circuit, a back EMF which is generated in an inductor, is harnessed so as to return energy associated with the EMF, to a depletable energy source which is supplying such a circuit, or to a load included in the same primary circuit as the energy source. It is envisaged that a wide range of electrical supply sources will derive benefit from the invention disclosed below.

A first aspect of the invention is a method of harnessing back EMF in an electrical circuit in order to increase the efficiency of energy usage to 90% or more, (compared to a Resistor-Temperature v Wattage calibration circuit). This is done by arranging the circuit so that it contains an inductor and an energy-receiving device configured so that the current flowing through the inductor generates a back EMF whose energy is used to provide both additional energy to the circuit itself, and the back EMF energy to the energy-receiving device.

In a preferred form of the method, the back EMF is generated by interrupting the current flow through the inductor, ideally, interrupting and restoring the current flow repeatedly and rectifying the current. The rate of interruptions should be at least 40 times per second and preferably 50 or more times per second. The duty cycle of the interruption should be at least 50% and ideally be 75%. That is, the current flow through the inductor is "On" for 50% to 95% of the time and "Off" for 50% to 5% of the time.

In a further preferred form of the invention, a back EMF is generated which is large enough to cause the comparative energy efficiency to be at least unity. This can be achieved by setting and controlling a suitable value for a variable selected from one or more of:
The frequency of interruptions from the wave rectifier;
The duty cycle;
The thickness of the wiring in the circuit;
The efficiency of the inductor core,
the value being set in accordance with the operational requirements of the desired application.

In another preferred form of the invention, the energy-receiving device is either an energy-requiring load, and/or an energy storage device, ideally a replenishable source of either DC or AC electrical energy. Ideally, the method also includes providing at least one inductive load associated with each receiving device. The inductor may be a transformer or other suitable inductive device.

A second aspect of the invention is a method of restoring electrical energy to a source, which is done by providing a closed circuit containing a source of electrical energy which passes current through the inductor, creating an extruded magnetic field around the inductor, which field is then collapsed, creating a back EMF which is then fed to the source with an energy usage efficiency factor of 1 or more when compared to a Resistor Temperature Versus Wattage Calibration Circuit.

This feedback of energy can be to an energy-requiring load or to an energy storage device.

In a further preferred form of the invention, the bias-changing mechanism is a wave rectifier and the method of use is to make the wave rectifier output interrupt the electric current.

Ideally, the inductor used should have a solid core which is capable of inducing a magnetic moment associated with a collapsing magnetic field.

The method used in this invention includes selecting a value for:
The frequency of interruptions from the wave rectifier;
The duty cycle;
The thickness of the wiring in the circuit;
The efficiency of the inductor core,
so that the magnitude of the back EMF generated when the magnetic field collapses, is in a predetermined range which suits the requirements of the energy-receiving device and its intended use.

In one preferred form of the invention, the inductor is a transformer with a primary winding large enough to create sufficient voltage from the back EMF, to feed power back into the circuit. If the current feeding the inductor is AC, then the current interruptor can be a diode or a triac.

A further aspect of the invention is an apparatus comprising an inductor having a core suitable for the generation of back EMF from collapsing magnetic fields, and an electrical circuit containing that inductor, a replenishable energy source, and energy-receiving device and means for changing orbital bias of a magnetic field set up in use and associated with the inductor, both it and the source with variable frequency and variable Mark-Space ratio, being configured to operate the inductor, and arranged so that the magnetic field of the inductor is made to collapse and be restored repeatedly, thereby generating electrical energy, the circuit being capable of conducting the energy and providing it to the energy-receiving device.

A BRIEF DESCRIPTION OF THE DRAWINGS

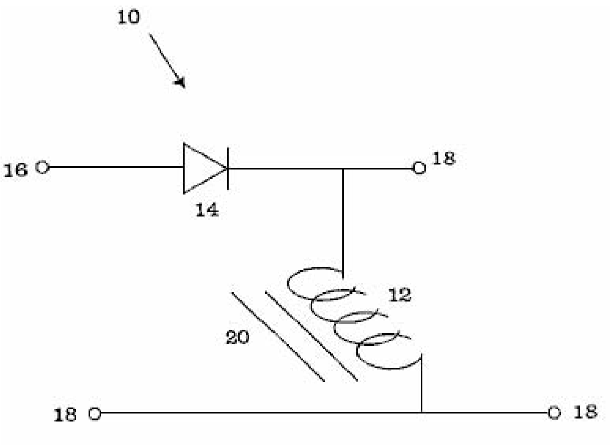

FIGURE 1

Fig.1 illustrates schematically, a circuit to which the invention may be applied.

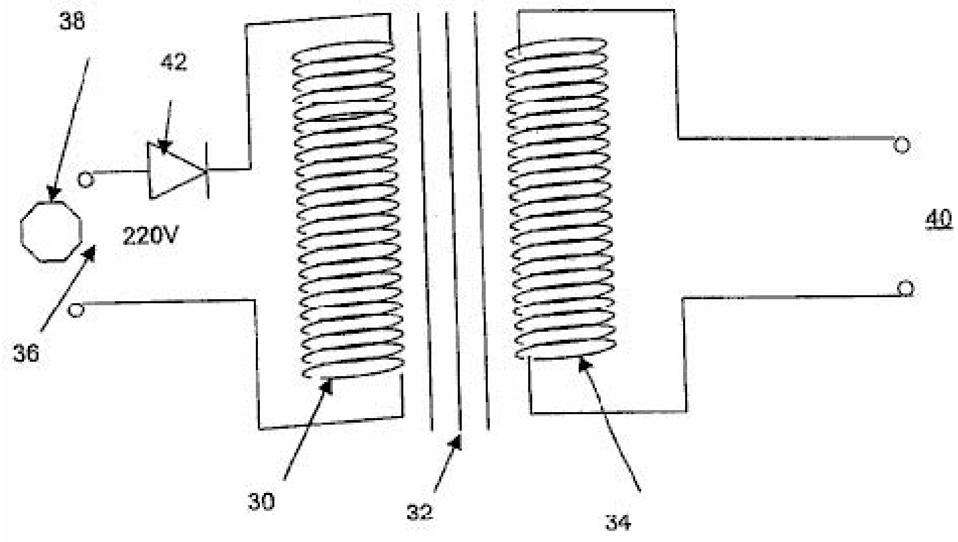

FIGURE 2

Fig2. illustrates an electrical generator which may be used with this invention.

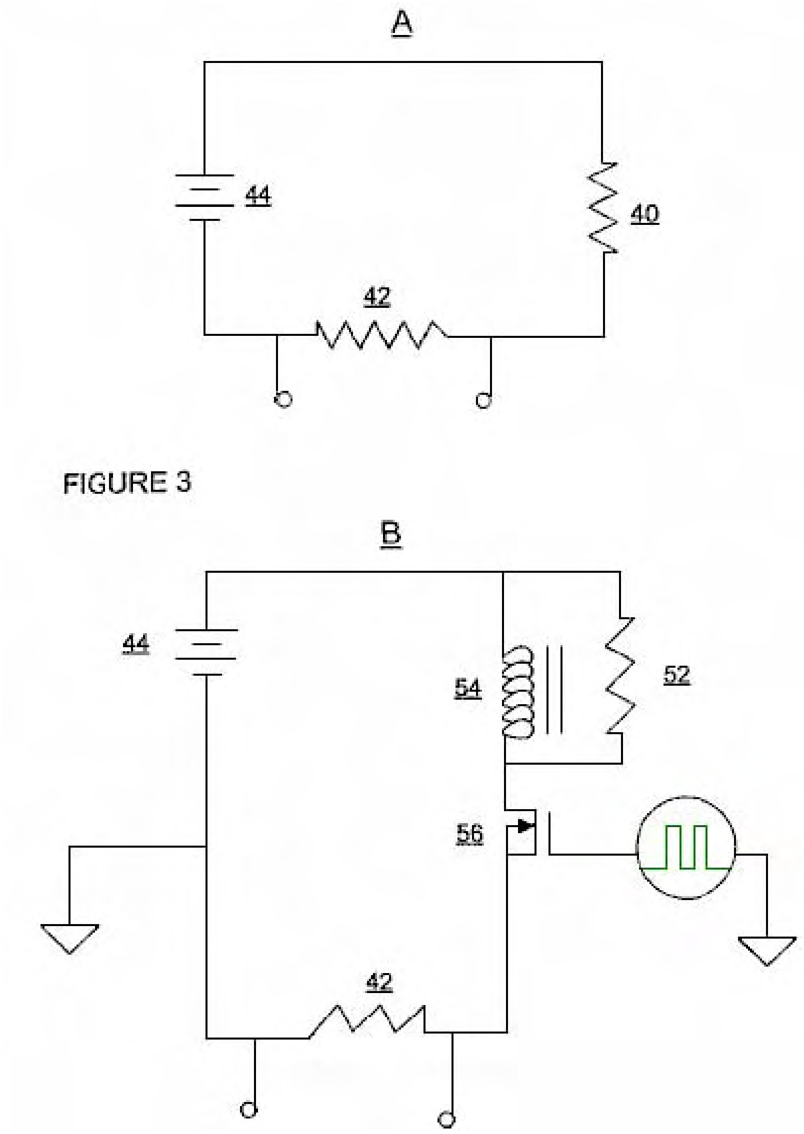

FIGURE 3

Fig.3A illustrates a control circuit which is described in **Example 1** below, and **Fig.3B** illustrates a test circuit, the performance of which is compared with the circuit shown in **Fig.3A**.

FIGURE 4

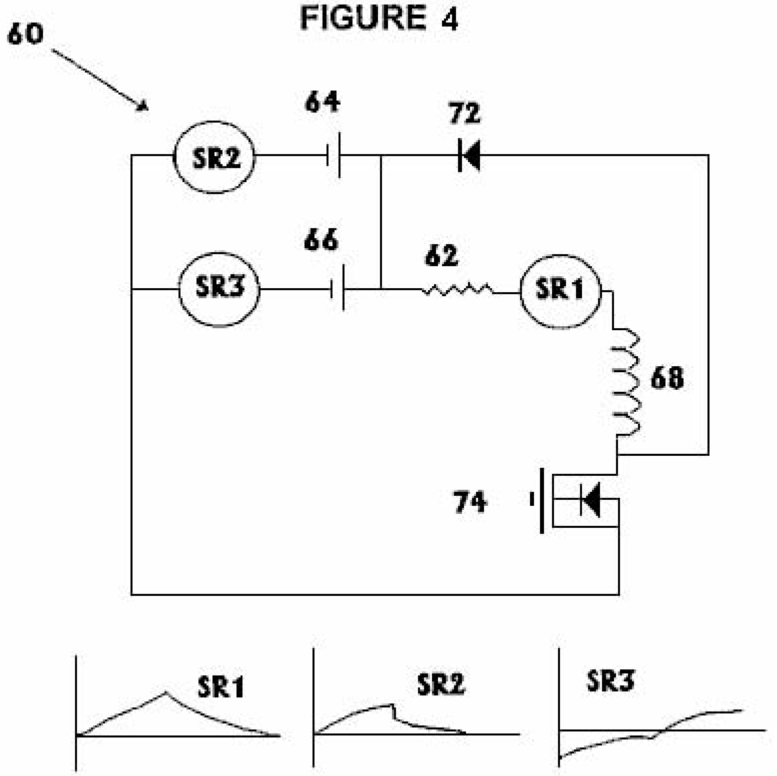

Fig.4 illustrates the test circuit described in **Example 2** below.

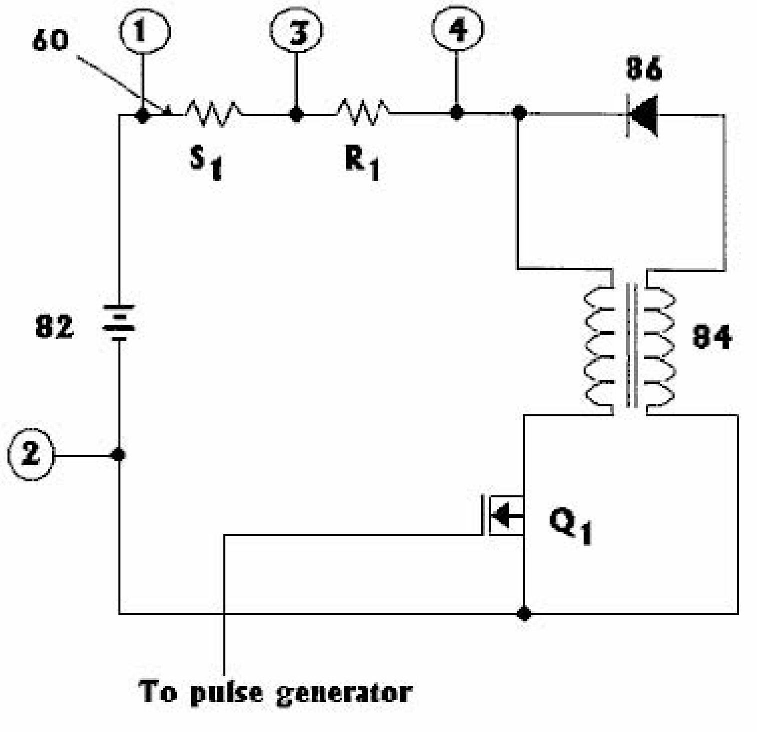

FIGURE 5

Fig.5 illustrates the circuit referred to in **Example 3** below.

DETAILED DESCRIPTION OF THE INVENTION

By connecting an inductor in a load-bearing circuit and causing back EMF to be established in the inductor, there may be created a voltage of sufficient magnitude to restore energy to the circuit's source of power and so reduce its rate of depletion. It is not suggested that the load would consume less energy, but that additional energy from the back EMF can be supplied to either the load or the power source supplying that load.

The circuit can be supplied with either DC or AC power and while the inductor may be any suitable inductor, the use of a transformer is preferred. An alternative is a winding or a choke, preferably containing a core capable of inducing a magnetic moment associated with a collapsing magnetic field - typically an iron core, but it could be any suitable liquid or gaseous medium or combination with or without additional solids.

To generate back EMF, the current flowing through the inductor needs to be interrupted repeatedly which can be done by any suitable means. A preferred method is the use of a variable-duty cycle chopper. If the current is AC, then the interruption can be cause by using a wave rectifier such as a diode or a triac. If the current is DC, then the current interruption is achieved by the use of an oscillator, MOSFET or an equivalent means whereby a fluctuating magnetic field in the inductor can be created.

The method of recycling energy which is the substance of this invention has the following steps:
(1) Setting up a circuit containing an inductor which has an extruded magnetic field and which is arranged in such a way as to allow electrical energy to be passed both to and from the inductor, and
(2) Changing the orbital bias of the magnetic field around the inductor, causing the collapse of the magnetic field and the creation of the back EMF current.

These two steps are repeated in rapid succession and when the current flowing through the inductor is interrupted, an alternative circuit is provided in order to direct the back EMF current to the desired destination. Preferred inductor core materials are iron and other ferrous materials.

The circuit does not need to be complicated but it needs to be able to either interrupt or reverse the current through the inductor as already described. The invention will now be described in greater detail by referring to the diagrams:

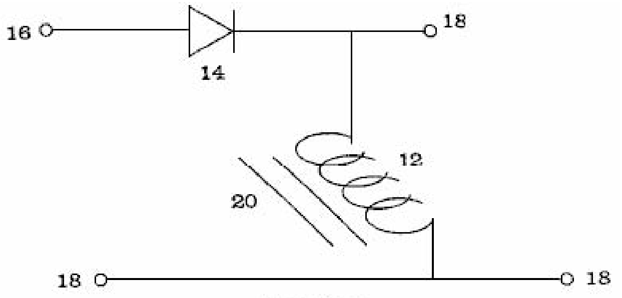

FIGURE 1

In **Fig.1**, the wave rectifying diode **14** is placed in series with a primary inductor **12**, and acts as an interruptor of the electrical current supplied to the circuit. If a sine wave or square wave waveform is applied to the circuit through points **16** and **18**, a pulsing DC waveform is created in the winding of inductor **12**. The interruption of each waveform cycle in the inductor winding **12**, induces a fluctuating magnetic field in the iron core **20** inside the inductor.

It is thought that the back EMF causes a reverse waveform in the inductor winding **12** which is a full sine wave in the case of an alternating current powered circuit, or a full square wave if the circuit is powered by DC pulses. The inductor **12**, may be connected with a load (not shown) in series or in parallel at any of the points marked **18**.

Depending on the frequency of the interruptions, the duty cycle, the thickness of the wiring and the efficiency of the core, the voltage across the inductor **12** may be conducted through a closed circuit to be used in powering the load or returned to the power source. It is desirable, though not essential, that the frequency of interruptions should be not less than 40 Hz although 500 Hz or higher is more appropriate for some applications.

An example of a suitable closed circuit employing such a system is a battery powering a lamp. A transformer may be connected in series with the lamp along with a current chopper which has a variable duty cycle. The output from the transformer can be routed through a diode, a high value resistor and a capacitor all in series. Here, when the chopper service is on, the current flows through the load and transformer. Repeated opening and closing of the current-chopper system causes the generation of electric current in the transformer secondary and that current is passed back to the battery, **exceeding** the current draw.

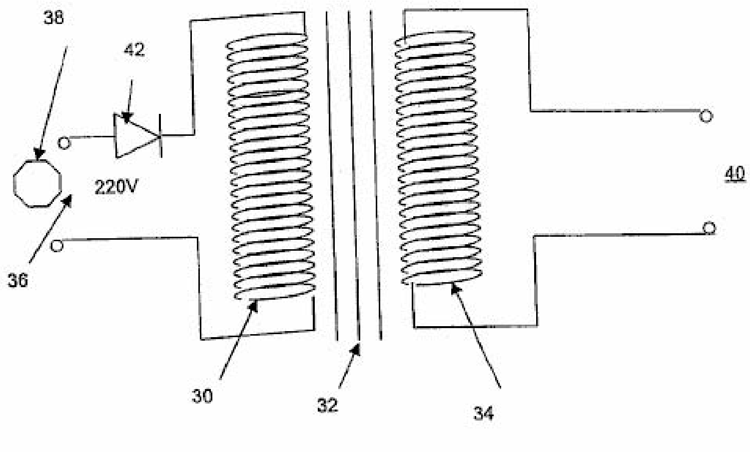

FIGURE 2

Fig.2 shows another variation of the circuit where a primary winding **30**, having for example, 220 turns around a cylindrical core **32**, made of a ferrous metal such as iron or an iron alloy, is associated with a secondary winding **34** of about the same number of turns. The secondary winding is wound around the core adjacent to, or on top of the primary winding **30**, producing a magnetic coupling between the windings, enhanced by the core **32**. The circuit input **36** is connected to an AC source **38**, typically a 220V 50Hz mains supply. The circuit output is taken from the secondary winding **40**. A diode **42** is connected in series with the primary winding **30**, causing the full-wave AC input to become a pulsating input to that primary winding.

On each positive-going half cycle, the primary winding induces a corresponding current in the secondary winding **34**. However, when, due to the blocking effect of diode **42**, the magnetic field resulting from the current in the primary winding **30** collapses, the resulting back EMF in the primary winding induces a corresponding negative-going waveform in the secondary winding **34**. Hence the output **40** from the secondary winding is a full-wave AC waveform.

Although this description is for a circuit with one inductor, it is clear that additional inductors could be used to achieve even greater enhancements in system performance. For example, two or more primary windings could be wired in parallel where just one is shown in **Fig.2** above, each providing a separate, independent full-wave AC output. Alternatively, more than one secondary winding can be placed on the transformer core, utilising the magnetic coupling of the core.

Example 1: Two tests were conducted on two wire-wound, 10-watt resistors manufactured by Philips. The resistors have identical surface areas. The object of the test was to compare the rate of current draw of a standard "Resistor temperature Versus Wattage Calibration Circuit" (the "control") indicated in **Fig.3A**:

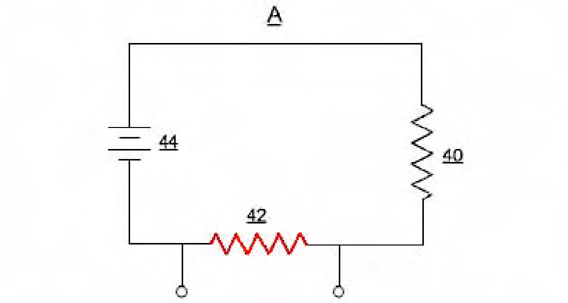

FIGURE 3

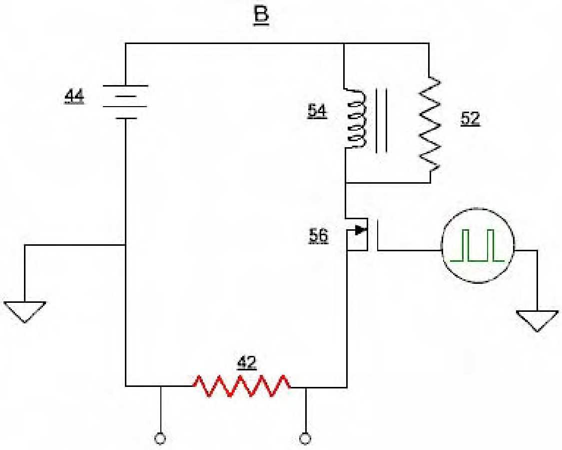

to a test using a switching device and an inductor as indicated in **Fig.3B**. The same battery was used in both tests. The control test shown in **Fig.3A**, had a thermocoupled 68 ohm resistor **40**, and a sensing resistor **42**, placed in series with the battery terminals **44**. All measurements were made after the temperature of resistor **42** had reached its maximum value of 95$_{o}$C. The current was measured as being 196 mA and as the battery voltage was 12.28 volts that represents a power level of 2.406 watts.

The test circuit shown in **Fig.3B**, had a MOSFET switching circuit transistor **56** driven by a square wave signal (shown in green) whose Mark/Space ratio was adjusted until the load resistor **42** reached its highest value of 93$_{o}$C and all quoted measurements were made after that time. The pulsing signal was running at 5kHz with an "On" time of 22.87% and an "Off" time of 77.13% of the time. The current flow was measured as 171.8 mA which represents a power input of 2.109 watts. The room temperature remained the same during the entire test period.

Allowing for a 5% error in the measurements, this result shows an energy output which is 8.6% greater than the power input, or COP=1.086.

Example 2: The following tests were conducted to prove that subject to specific circuit configurations, an inductor is able to enhance energy efficiency to levels beyond the standard capabilities of an electrical power supply source. The tests also indicate that if a resistor is placed in series with a power supply and an inductor as shown in the Test Circuit, then the correct wattage analysis of that power may be calculated as the energy source voltage multiplied by the amperage (V x I) and that I_2R no longer holds as a base calculation of the wattage and power generated in this particular system.

FIGURE 4

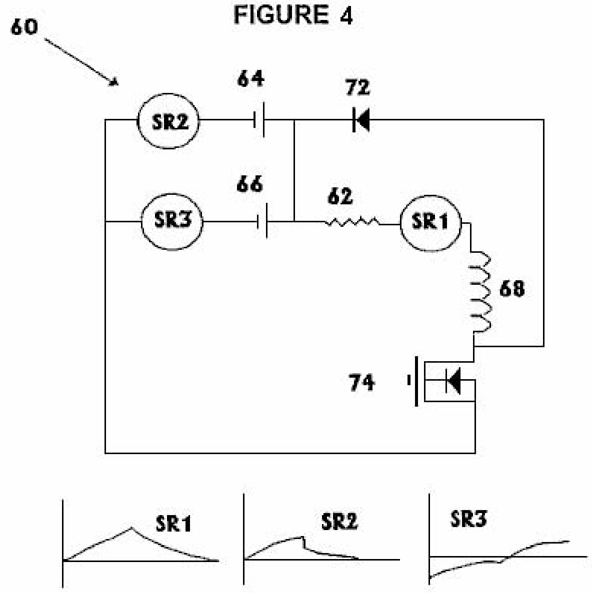

With reference to **Fig.4**, the Test Circuit **60** comprised a 47 ohm, 10 watt, Philips wire-wound resistor **62**, placed in series with two 6-volt batteries, **64**, and **66** connected in parallel. A inductor **68**, was placed in series with load resistor **62**. A positively-biased diode **72**, was placed in parallel with the inductor **68** and above an n-channel MOSFET transistor switching device, **74**. This wire was then taken back to the positive terminal of the batteries. The battery voltage was measured at 6.12 volts.

The duty cycle was adjusted to a 50:50 Mark-Space ratio, giving equal times for the On condition and the Off condition. The load resistor reached a temperature of 30_{o}C and the ambient room temperature was 22_{o}C. The waveforms for the three sensing resistors **SR1**, **SR2** and **SR3** are shown in **Fig.4** below the circuit diagram.

The voltage waveform across the **SR1** sensing resistor in series with the load resistor **62**, is roughly triangular but followed an exponential rise and fall during the On and Off periods of each cycle. The voltage did not fall below zero. The peak positive voltage was measured as 0.006 volts which corresponds to approximately 0.169 watts which is less than would be expected from the temperature of the load resistor. It would be expected that 0.375 watts would be required to produce the measured 30_{o}C of the load resistor **62**.

The voltage waveform across the **SR2** sensing resistor placed in series with battery 1, marked **64**, was roughly triangular in form with some exponential curvature as shown. The average current draw from the battery was measured and calculated to be 0.025 amps, which is a power draw of 0.153 watts..

.

The voltage waveform across the **SR3** sensing resistor placed in series with battery 2, marked **66**, showed a waveform with equivalent amounts above and below the zero voltage level. The On voltage peak was 0.0055 volts and the Off voltage peak was -0.0055 volts (i.e. below zero volts). No power was being drawn from this battery and in fact, the shape of the two sections of the waveform indicate that there was actually a slight degree of charging on this battery although this was ignored as being too small to be significant.

The inescapable conclusion from these tests is that to achieve identical heating of the load resistor, the standard circuitry required 0.0612 amps while the test circuit required only 0.025 amps. This means that the pulsing circuit is more than 100% more efficient than the conventional circuit. These measurements represent a Coefficient Of Performance of 2.45 as the output power is 2.45 times the input power.

These two examples shown here do not necessarily represent optimised values and further gains may be attained by using two or more inductors, two or more energy sources or energy storage and its switching circuitry, and other measures.

Example 3: A further set of tests was conducted to investigate the relationship between power supplied by the battery marked as **82** and power dissipated by a resistor **R_1** in the circuit of **Fig.5**.

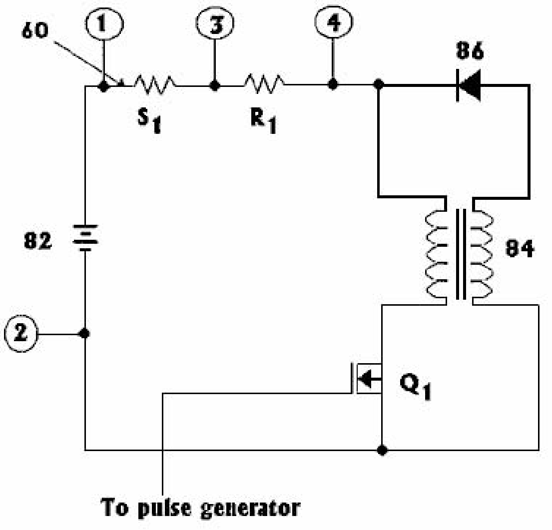

FIGURE 5

This is to test the efficiency of the energy conversion as the duty cycle of the FET switch **Q_1** is adjusted. This circuit includes an inductor **84**, which has equal primary and secondary windings and a 350 VA rated core. The circuit also contains a positively-biased diode **86** and other components mentioned below. The tests were conducted with "On" times of 90%, 80%, 70%, 60% and 50% and the results are shown in this table:

Duty Cycle	V_{1-3} Average	Average Current	V_{1-2} DC	Battery Power	V_{1-3} rms	RMS Current	V_{3-4} rms	Load Power	P_{load} / P_{batt}
%	mV	A	V	W	mV	A	V	W	ratio
90	69.5	1.390	12.57	17.46	102.5	2.05	10.02	20.54	1.176
80	38.2	0.764	12.64	9.657	73.1	1.462	7.58	11.08	1.148
70	20.9	0.418	12.69	5.304	51.1	1.022	5.36	5.478	1.033
60	7.9	0.158	12.73	2.011	34.1	0.682	3.19	2.176	1.082
50	1.2	0.024	12.76	0.306	15.9	0.318	0.94	0.299	0.976

****

The important thing to note from these figures is the way that the ratio of the output power to the input power (which is the Coefficient Of Performance or "COP"), shown in the final column, varies with the Mark-Space ratio shown in the first column. For all On time ratios over 60% in this very simple circuit, the COP is greater than 1 which conventional science swears is "impossible" in spite of it being demonstrated over and over again by different people and different styles of apparatus.

Rosemary Ainslie's techniques shown here where the back-EMF pulses are harnessed and used to perform useful functions, achieve COP values from 4 to 17 in tests performed to date.

John Bedini's captured back-EMF battery-charging circuits have been replicated with high-voltage battery banks being charged by one 12V battery and yielding COP=11 results.

The pulse motor design of Robert Adams which utilises the back-EMF pulses and other techniques, reaches COP figures of 8 or higher, depending on the quality of the build and the accuracy of the adjustments.

Thane C. Heins demonstrates on video http://www.youtube.com/watch?v=RbRPCt1-WwQ&feature=channel a very simple transformer arrangement which produces COP=3.77 a result which you can easily check out for yourself.

Rosemary's neat technique which produces this energy gain has every appearance of being a more easily adjusted method of producing the gains of the Tesla Switch which has to have a substantial inductive load in order to get its COP>1 performance and which is very tricky to adjust.

It should be stressed at this point that it is physically impossible to draw more energy out of a circuit than the energy flowing into that circuit. Energy can't be destroyed or created and you can't have more than 100% of anything, anywhere, any time. But Rosemary Ainslie and others have demonstrated very clearly that carefully designed and operated circuits definitely put out more energy than the user puts into the circuit. I do not know of any way to prove where that extra energy comes from, but it definitely comes from somewhere, flowing into the circuit from outside. However, let's not concern ourselves with trying to discover the source of this extra power and instead, just learn how to capture and use it for our own benefit.

So, let's recap on how Rosemary's circuitry is set up and used. The initial basic circuit which gives an energy gain is:

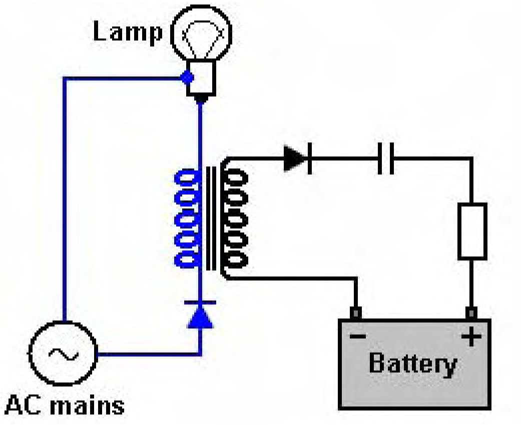

Here, a mains-powered light bulb has two components connected in its normal circuit. The first component is a diode "D" and the second a transformer "T":

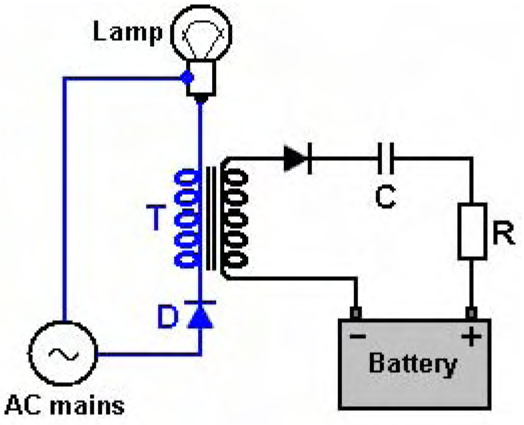

The diode has a very low resistance to current flow in one direction and a very high resistance to current flow in the other direction. We tend not to think about it, but the ordinary mains current flowing through a light bulb switches its direction of flow dozens of times per second - actually, sixty times per second in the USA and fifty times per second in most other parts of the world.

If we put a diode in the circuit as shown in the diagram above, it gets in the way of every second surge of current through the bulb. This causes the current flow to be in only one direction and there are fifty or sixty gaps per second in the flow of current through the bulb. This pulsing current flow passes through the left hand transformer winding (shown in blue in the diagram), called the "primary" winding, and it generates a voltage and current flow in the other winding of the transformer (shown in black in the diagram and called the "secondary" winding).

The two lines drawn between the two windings indicate that the transformer has some kind of magnetic core. Having a core in a transformer can be a very mixed blessing. It will work very well if there is no core material - generally called an "air-core" transformer. Energy gains in a circuit like this, increase with increased voltage and even more so with increased rate of pulsing (called the signal "frequency"). An air-core coil or transformer will operate at very high frequencies, limited mainly by the wire diameter. Most powerful transformers are usually supplied with an iron core as that improves their magnetic coupling at the very low pulse rates used with mains power. That iron core has very limited frequency performance as it is limited by how fast the iron can alter its direction of magnetisation. It is unlikely that you would get good performance even at the low frequency of one thousand pulses per second ("1 kHz"). As each of these pulses feeds a little packet of extra energy into the circuit, obviously, you would like as many as possible per second, so that the energy inflow is very great. You will notice in Rosemary's patent, that she mentions raising the pulse rate to five hundred per second to increase the power gain.

However, that does not matter here as we are using a mains electrical supply which is just creeping along at well under one hundred pulses per second in order to explain the technique in a simple form. Anyway, the voltage generated in the secondary winding of the transformer is a full-wave voltage waveform just like the original mains waveform with no gaps in it. This energy in the secondary winding could be used for a wide range of different purposes. The one shown here is the charging of a battery or a bank of batteries arranged to work at almost any voltage. Contrary to popular belief, the voltage used to charge a battery is not particularly important provided it is high enough, but what is very important is the current flow into the battery, and that needs to be controlled carefully. Ed Gray demonstrated that charging with a high voltage was a perfectly good method and he used a capacitor to control the current flow into the battery. Eventually, he gave up doing that and used an ordinary car alternator to charge the battery as it was difficult to get the capacitor value just right to achieve the desired current.

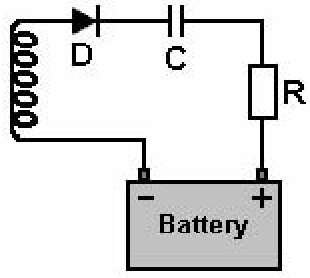

Rosemary uses the same technique but adds in a resistor "R" to make sure that the charging current never becomes excessive. The diode "D" converts the alternating voltage in the transformer winding to positive pulses, that is, pulses where the voltage rises above zero volts and never falls below zero volts. This is the sort of voltage which we need for feeding to the positive terminal of a battery.

In passing, while the capacitor "C" does act as a current-limiting device, it may also act as a conversion device as extra energy flowing into the circuit from outside can be of a somewhat different type to the electrical current drawn from the mains, and a capacitor is a well-proven method of converting the incoming energy into the more familiar conventional form.

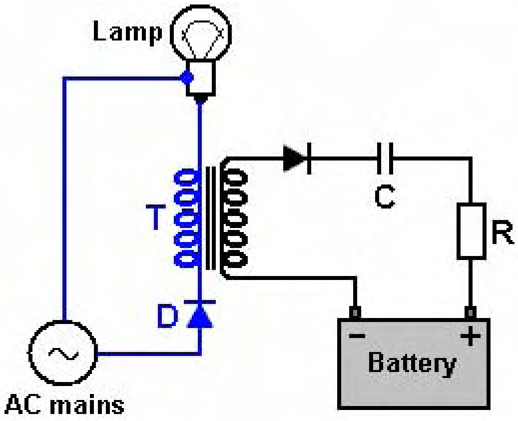

So, looking at the circuit again, the mains is converted to a pulsing 50% Mark-Space ratio current flow through the primary winding of the transformer "T". When that flow cuts off suddenly, there is an inflow of energy into the winding from outside the circuit, forming what is called a "back-EMF" brief voltage pulse in the opposite direction. This fills in the pulse gaps in the secondary winding, giving it a full-wave waveform in spite of the primary being fed only half of that waveform.

The secondary power has the negative pulses (below zero volts) chopped off by the diode on the battery side, giving a series of positive pulses at the same frequency as the mains. The capacitor "C" and the resistor "R" control the current feed to the battery and allow it to charge at a suitable rate.

So, that is the basic circuit - simple and elegant and very effective in use. But, it does not stop there as that basic idea can be used in various other ways. For example, like this:

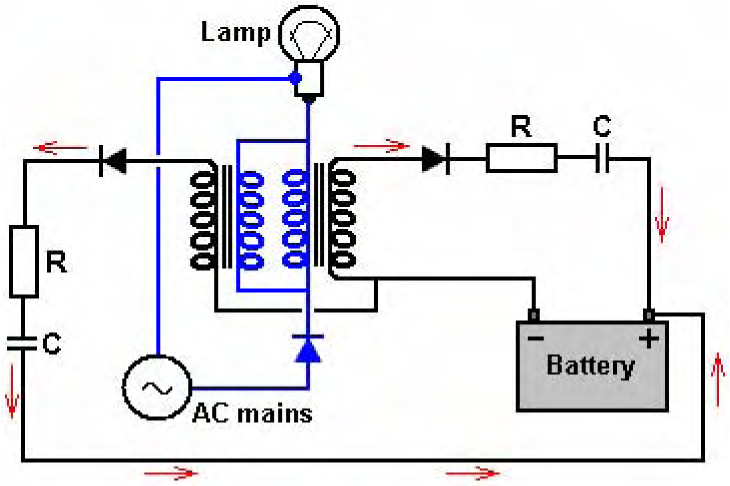

This is the same circuit, but two transformer primary windings are connected across each other (called being wired "in parallel"). The operation is exactly the same as before except that two copies of the mains waveform are made by the magnetic coupling of the transformer windings. Each is "rectified" into positive-going pulses and fed to the battery, creating a larger charging current. An alternative version of this is:

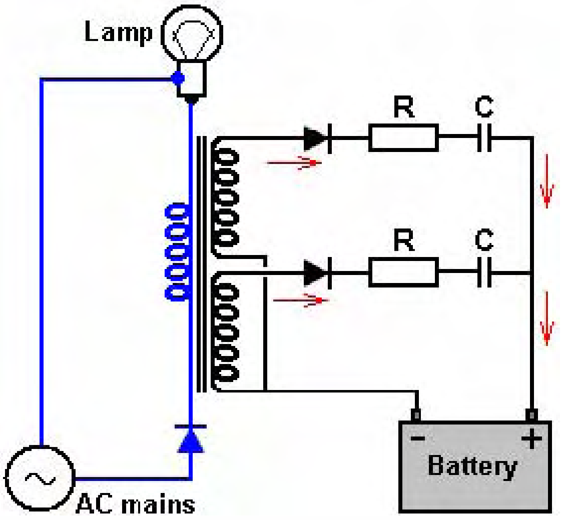

In this variation, the transformer is wound with one primary and two secondary windings. The magnetic coupling of the transformer core generates copies of the mains waveform in both of the secondary windings. Each are rectified and fed to the battery as before.

If this circuit was being built using standard off-the-shelf transformers, it might be easier to use two separate transformers connected "in series". This would depend on the application and the windings of the particular transformers to be used.

The diagrams show up to now have all suggested charging one or more batteries, but this has just been for the convenience of presenting a simple application. As is pointed out by Rosemary, it is perfectly possible to drive some other load such as a heater or a motor using these additional power take-off connections. However, for our continuing description of the circuit options, we will stay with battery charging. So, using two standard transformers, the circuit would be as shown here:

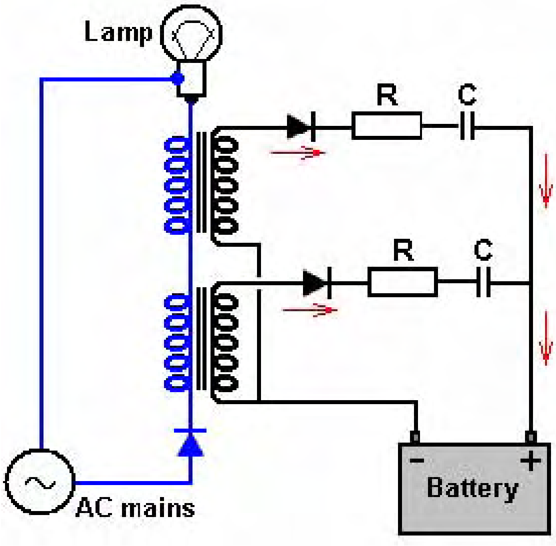

All of the Ainslie circuits mentioned so far have used the mains, but there is very considerable scope for circuits and arrangements which do not use the mains at all. Admittedly, a certain amount of electronic construction work is needed, but the results can be very rewarding. For example, instead of charging a battery bank, it is quite possible to charge the battery which is driving the circuit itself.

Now, before you start to say that this is an impossibility, please remember the little girl and her small electric car battery. Her father found that if he left the charging circuit on too long that he needed to put a bulb in as a load in order to avoid over-charging the battery, and that battery (appears to be) what powers the charging process. In all of these systems, please remember that additional energy flows into the circuit from the local environment, so charging a battery which is driving the circuit is perfectly possible. For example, Robert Adams of New Zealand ran his motor for a ten-hour test and the battery voltage was exactly the same after the test as it was before the test started. If you think that is spectacular, then consider John Bedini's self-charging motor. John ran that non-stop in his workshop for more than three years !! So please don't try to tell me that this sort of thing is impossible because that's what you have been told. Self-charging can definitely be achieved **if** you know what you are doing.

Here is an Ainslie self-powering circuit:

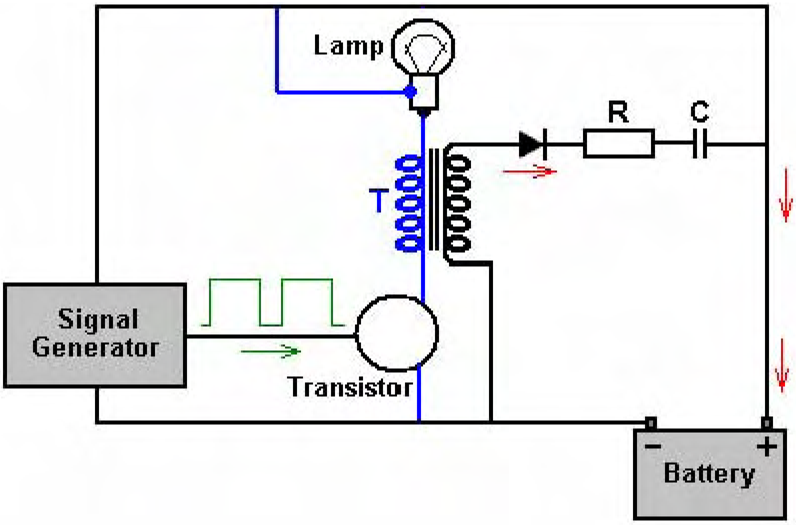

Here, the signal generator, which is probably just a simple 555 timer circuit, produces a train of pulses with a Mark-Space ratio of more than 50% On time. That signal is used to switch a transistor On and Off in rapid succession. The transistor type is deliberately not shown as it can be an NPN silicon transistor, an FET type of transistor, a Darlington pair, or one of those fancy new IGBT devices. Whatever the type chosen, the lamp will be switched on and off so rapidly that it will light up. The fluctuating current through the transformer "T" will produce an alternating voltage in its secondary winding and that will pass through the diode, resistor "R" and capacitor "C" to charge the battery in spite of the fact that the battery is powering the signal generator circuit and the lamp.

Obviously, all of the other options and variations discussed above in connection with a mains-powered version of the circuitry will apply equally well to a battery-powered version. If running from a battery or a bank of batteries and high voltage is wanted, then an off-the-shelf inverter can be used to generate the high voltage used for the mains supply.

If you would like to test the operation of the circuit and the design generally, here is a stripboard layout which might be used:

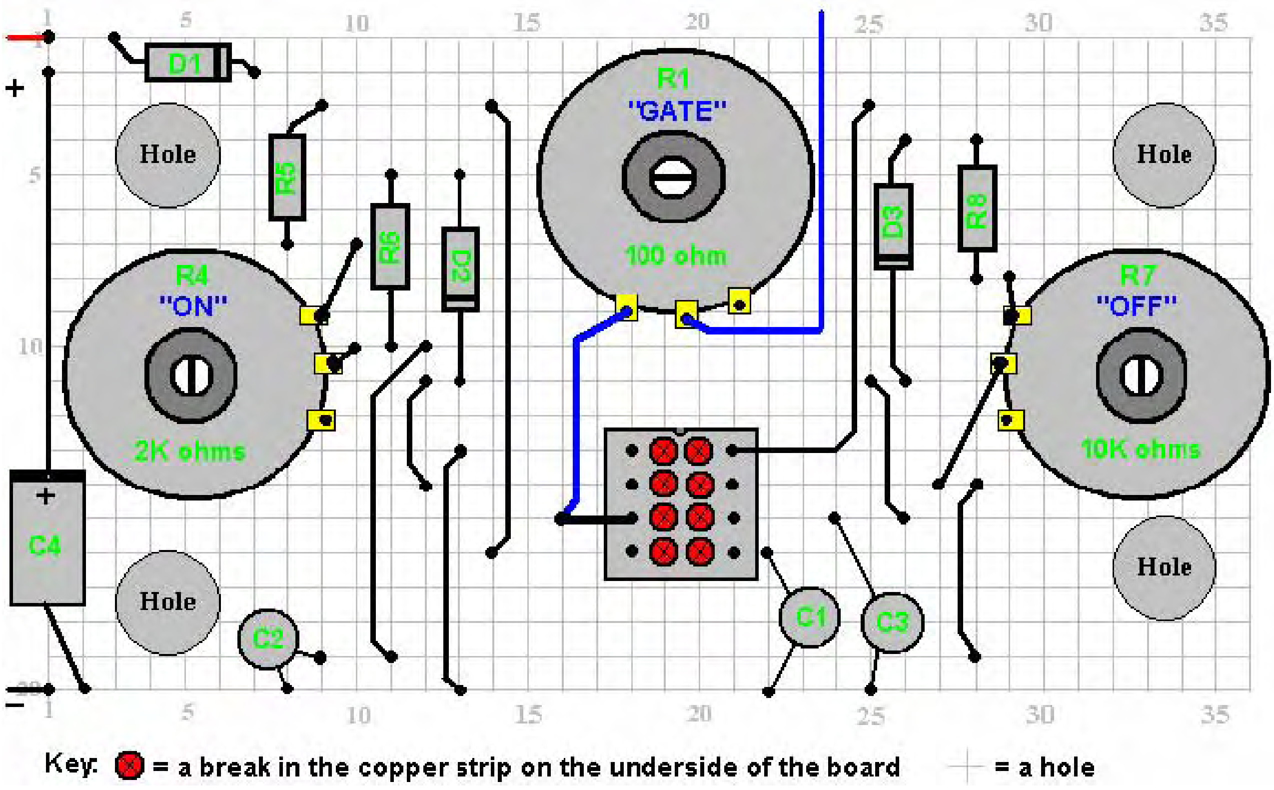

The preset resistors are high power units looking like this:

These are adjusted with a flat screwdriver inserted into the slot at the end of the shaft although they could have a knob attached. It takes ten full turns of the shaft to move across the full range of the resistor. If you are adjusting the Mark-Space ratio and the ratio goes up when you turn the shaft to the left but want that to happen when you turn the shaft to the right, then just swap over the wires going to the outermost terminals of the resistor and that will reverse the effect when you turn the shaft. You can stick the base of the resistor directly to the stripboard using "Impact" Evostick or any similar adhesive and that will hold it securely but still allow you to prise it off the board at a later date if you should need to.

There is no need to use knobs as the circuit will be set up, adjusted for best performance and then left untouched. The circuit can be built using stripboard like this:

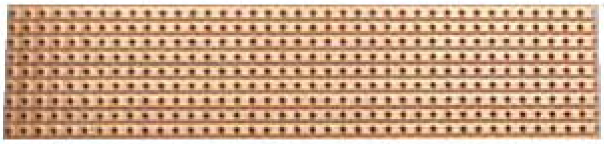

The view above is of the underside of the board as that shows the copper strips running horizontally between the holes. The copper strip is quite thin and can easily be broken using the tip of a drill bit or alternatively, a modelling knife. The spacing of the holes is arranged to match the pin spacing of standard Integrated Circuits such as the NE555 timer chip used in this circuit. The only place where the strips need to be broken in the layout above are between the pins of the NE555 chip and if you didn't do that, then the four pairs of pins would be short-circuited together, preventing the chip from operating. It is a good idea to use an 8-pin IC socket soldered to the board as that prevents any heat damage to the NE555N chip during soldering, the IC being plugged in after the soldering has cooled down. It also has the advantage that if the chip ever gets damaged, then plugging another on in is a very easy thing to do. After the board is completed, it is also probably worth running a solder layer along the copper strips which carry some current, that is the plus and minus strips and the strip between pin 3 of the NE555N and the point where the connection to the variable resistor is made. You will notice that the layout of the board includes four holes to take mounting bolts. When these are drilled, the strips under the board need to be cleared away to make sure that no short-circuits can occur when the bolts are in place. The board mounting is like this:

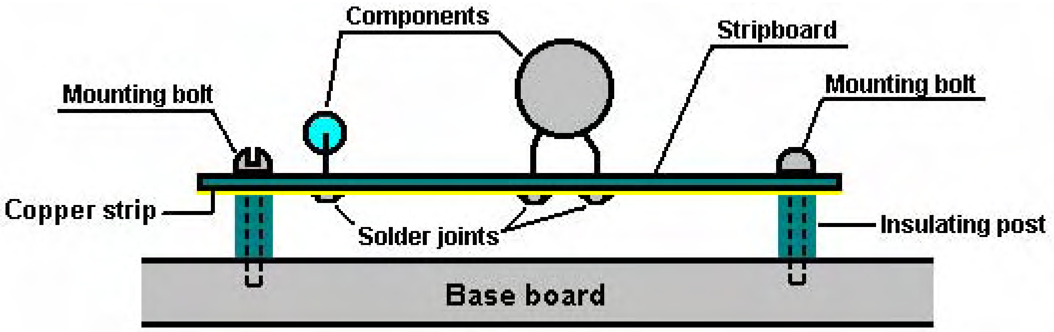

Suppose we wish to replicate and test this circuit:

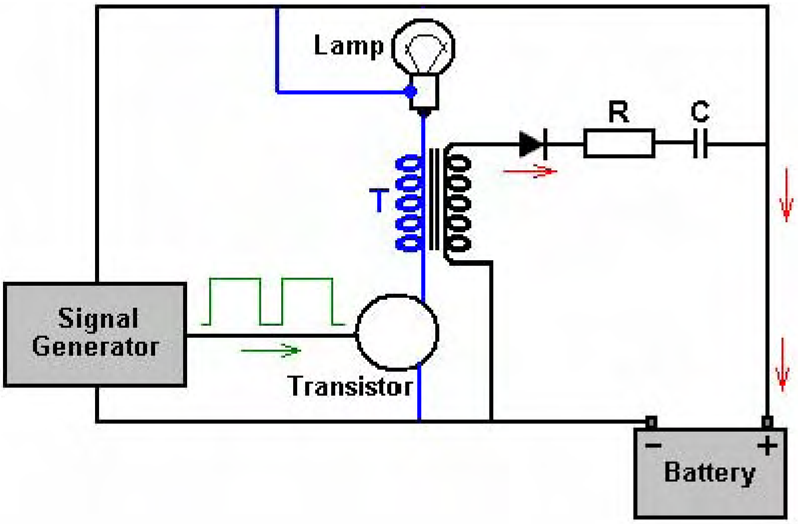

We need to remember that this is just the outline for a practical circuit and that it does not show the normal extra items like and On / Off switch and a fuse or circuit-breaker which are essentials for any circuit which contains a powerful battery. Please remember that you can't see current flow and if there is an accidental short-circuit, the first you may know of it is smoke !! That tends to be expensive, especially if some of the components are pricey and/or hard to get.

If we work with the Ainslie pulsing circuit shown at the beginning of this document, then a physical layout convenient for experimenting might be:

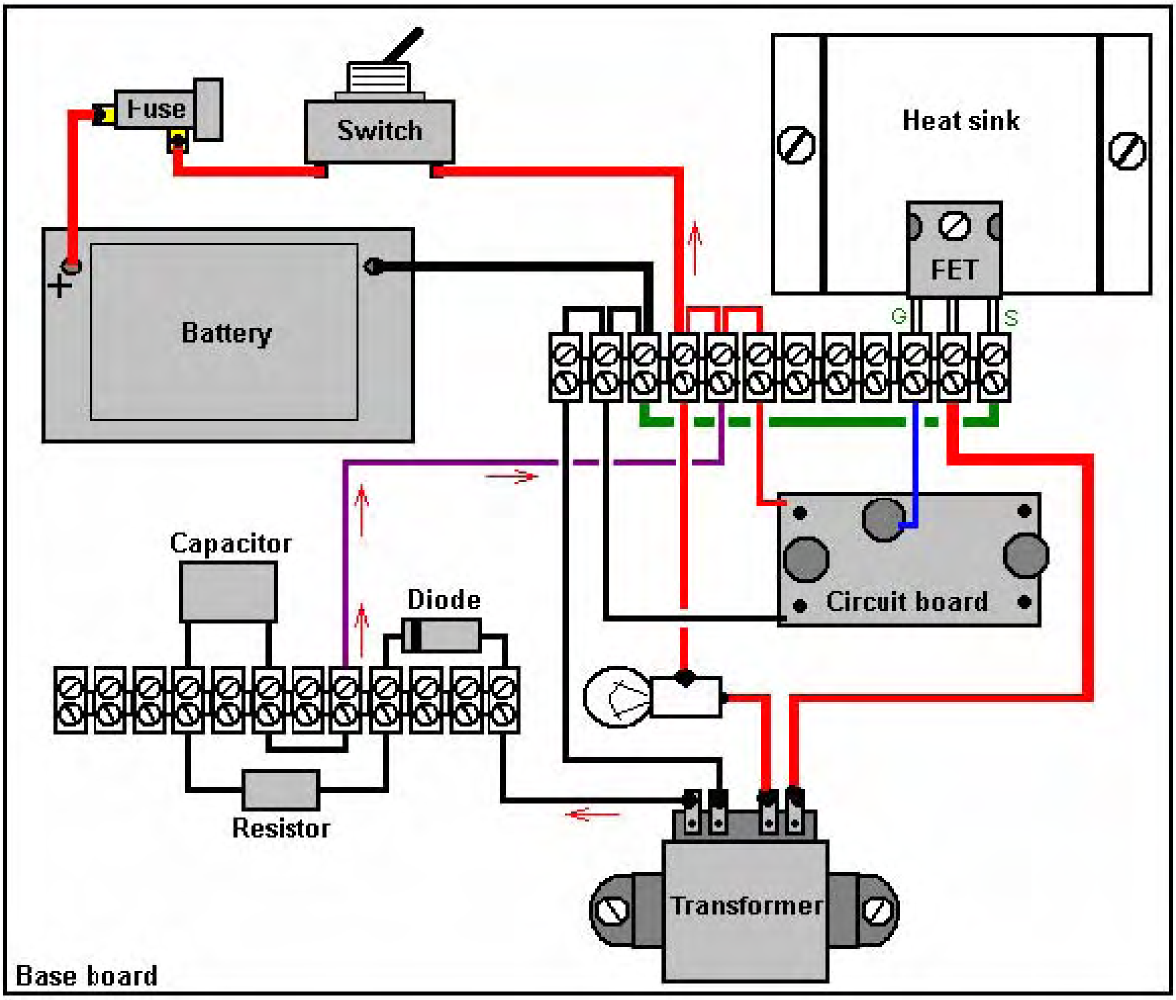

The "heat sink" shown in the diagram above, is just a piece of aluminium bent to raise the centre section slightly and allow good air circulation and clearance for the FET's locking nut. The FET is bolted securely to this plate in order to allow the aluminium plate to let the FET run cooler than it otherwise would. The lamp would be a 12V car type and while many people just solder directly to the bulb as shown here, there is no reason why a bulb socket should not be used. Car accessory shops usually have low-cost "reversing lights" which are a small plastic housing, a bulb socket, a bulb and two pieces of wire already attached to the bulb holder - very convenient, especially since it is very easy to change over to bulbs of different ratings for different tests and the bulbs themselves are cheap.

This circuit is of course, the same as the driver circuit for the heating element circuit. The green link wire shown in the diagram above gets replaced with the 30-watt 0.25 ohm resistor and the resistor should be positioned so that it is in the air, well clear of everything else as it may get hot during operation in spite of its very low resistance value.

Disclaimer: It must be understood that this document is presented for information purposes only and it must not be construed as being an encouragement to either build or experiment with this or any other circuit. The people who have investigated, designed, built or described this circuitry are in no way liable for any loss or damage caused by your actions, should you decide to experiment with this or any other circuit. Should you choose to do that, the responsibility for your actions rests entirely with you alone. This document, while presented in good faith, does not warrant that all attempted replications of the circuits described in it will definitely perform in the same way as those which were investigated during the tests which form the basis for this description.

Scientific Papers

The following links connect to various scientific papers and documents of interest. As web-based resources are very prone to change and disappear, if you download any of these to read, I suggest that you store them on your local drive in case they become unavailable at a later date. If, for any reason, the www.free-energy-info.co.uk web site is not available, then you can try www.free-energy-info.com, www.free-energy-devices.com or www.free-energy-info.tuks.nl which are mirror sites.

http://www.free-energy-info.tuks.nl/P1.pdf	4 Mb	Pulsed DC electrolysis
http://www.free-energy-info.tuks.nl/P2.pdf	360 Kb	Water arc explosions
http://www.free-energy-info.tuks.nl/P3.pdf	388 Kb	Plasma electrolysis
http://www.free-energy-info.tuks.nl/P4.pdf	321 Kb	Cold water fog explosions
http://www.free-energy-info.tuks.nl/P5.pdf	151 Kb	Engine operation with hydrogen added to the fuel
http://www.free-energy-info.tuks.nl/P6.pdf	63 Kb	Bubbles and steam electricity
http://www.free-energy-info.tuks.nl/P7.pdf	600 Kb	Stan Meyer's Water Fuel Cell
http://www.free-energy-info.tuks.nl/P8.pdf	3.5 Mb	Stan Meyer's Water Fuel Cell
http://www.free-energy-info.tuks.nl/P9.pdf	303 Kb	Water as Fuel by Stan Meyer
http://www.free-energy-info.tuks.nl/P10.pdf	68 Kb	Solar Hydrogen Production
http://www.free-energy-info.tuks.nl/P11.pdf	328 Kb	Passive Cooling
http://www.free-energy-info.tuks.nl/P13.pdf	347 Kb	A Solar Ice-maker
http://www.free-energy-info.tuks.nl/P14.pdf	711 Kb	Smart-Skin Shielding Technology
http://www.free-energy-info.tuks.nl/P15.pdf	215 Kb	Physics for Engineers
http://www.free-energy-info.tuks.nl/P16.pdf	2.5 Mb	Fuel Cell Handbook
http://www.free-energy-info.tuks.nl/P17.pdf	62 Kb	Prof. Kanarev's Low-current Electrolysis
http://www.free-energy-info.tuks.nl/P18.pdf	8 Mb	Principles of Ultra Relativity by Shinichi Seike
http://www.free-energy-info.tuks.nl/P21.pdf	754 Kb	The Theory of Anti-gravity
http://www.free-energy-info.tuks.nl/P22.pdf	13.3 Mb	Physics Without Einstein by Dr Harold Aspden
http://www.free-energy-info.tuks.nl/P23.pdf	6.9 Mb	Modern Aether Science by Dr Harold Aspden
http://www.free-energy-info.tuks.nl/P24.pdf	10 Mb	Unified Physics by Dr Harold Aspden

http://www.free-energy-info.tuks.nl/P25.pdf 1.5 Mb Permanent Magnet Motor Design

http://www.free-energy-info.tuks.nl/P26.pdf 402 Kb The Sea of Energy by Thomas Henry Moray

http://www.free-energy-info.tuks.nl/P31.pdf 14.5 Mb Tesla’s Science of Energy by Dr Thomas Valone

http://www.free-energy-info.tuks.nl/P32.pdf 605 Kb High Voltage, High Frequency Alternating Currents by Nikola Tesla

http://www.free-energy-info.tuks.nl/P33.pdf 632 Kb “Prodigal Genius” biography of Nikola Tesla

http://www.free-energy-info.tuks.nl/P34.pdf 488 Kb Damped Waves by Nikola Tesla

http://www.free-energy-info.tuks.nl/P41.pdf 3.2 Mb Electrogravitics Systems by Dr Thomas Valone

http://www.free-energy-info.tuks.nl/P42.pdf 2.5 Mb Zero-Point Energy Extraction by Dr Thomas Valone

http://www.free-energy-info.tuks.nl/P63.pdf 181 Kb Scalar Waves by Konstantin Meyl

http://www.free-energy-info.tuks.nl/P65.pdf 592 Kb EsotericScience.com Presentation

http://www.free-energy-info.tuks.nl/P66.pdf 450 Kb The Genesis Project

http://www.free-energy-info.tuks.nl/Lodge.pdf 27 Mb. Modern Views of Electricity by Sir Oliver Lodge

http://www.free-energy-info.tuks.nl/Lodge2.pdf 9 Mb. The Ether of Space by Sir Oliver Lodge

http://www.free-energy-info.tuks.nl/Lodge3.pdf 22 Mb. The Nature and Properties of Negative Electricity by Sir Oliver Lodge

http://www.free-energy-info.tuks.nl/TeslaBook.pdf 36 Mb. The Inventions, Researches and Writings of Nikola Tesla by Thomas Commerford Martin

http://www.free-energy-info.tuks.nl/DonKelly.pdf 13 Mb. The 'Manual of Free Energy Devices and Systems' by Donald A. Kelly

http://www.free-energy-info.tuks.nl/Blitz.pdf 30 Mb. Ultrasonics by Jack Blitz

http://www.free-energy-info.tuks.nl/Magnetos.pdf 9.5 Mb. Magnetos Simply Explained by F. H. Hutton

http://www.free-energy-info.tuks.nl/TeslaPatents/TeslaPatents.pdf 100 Mb. All of Tesla’s published patents

http://www.free-energy-info.tuks.nl/Magnetic_Motor.pdf 511 Kb Magnetic Motors by Lawrence Tseung

http://www.free-energy-info.tuks.nl/Maxwell.pdf 2.2 Mb The Electromagnetic Field by James Clerk Maxwell

http://www.free-energy-info.tuks.nl/Davson.pdf 46.7 Mb Davson’s book on Karl Schappeller’s work http://www.free-energy-info.tuks.nl/Newman.pdf 97 Mb The Energy Machine of Joseph Newman

http://www.free-energy-info.tuks.nl/Combine.pdf 2.1 Mb Radiant Energy and Over-Unity by Dan Combine

http://www.free-energy-info.tuks.nl/Rodin.pdf 3 Mb The Rodin Solution Project by Marko Rodin

http://www.free-energy-info.tuks.nl/SEG.pdf 594 Kb Magnetic Gravity Research by Roschin and Godin

http://www.free-energy-info.tuks.nl/Stan_Meyer_Full_Data.pdf 3.8 Mb Technical Brief by Stan Meyer

http://www.free-energy-info.tuks.nl/LTseung.pdf 3.2 Mb Over-unity Devices by Lawrence Tseung

http://www.free-energy-info.tuks.nl/Smith.pdf 2.0 Mb. Resonant Energy Methods by Donald Lee Smith

http://www.free-energy-info.tuks.nl/Cottrell.pdf 2.8 Mb. How Gravity Works by Maurice Cottrell

http://www.free-energy-info.tuks.nl/Davidson.pdf 4.5 Mb. Shape Power by Dan Davidson

Videos

http://www.free-energy-info.tuks.nl/Meyer.wmv 4.6 Mb
http://www.free-energy-info.tuks.nl/Newman.avi 53 Mb
http://www.free-energy-info.tuks.nl/pyramid.avi 25 Mb
http://www.free-energy-info.tuks.nl/stage1.wmv 1.9 Mb
http://www.free-energy-info.tuks.nl/stage2.wmv 1.9 Mb
http://www.free-energy-info.tuks.nl/stage3.wmv 3.7 Mb
http://www.free-energy-info.tuks.nl/WFCrep2.wmv 1 Mb
http://www.free-energy-info.tuks.nl/stan.wmv 4.5 Mb
http://www.free-energy-info.tuks.nl/WFCrep.wmv 5.3 Mb
http://www.free-energy-info.tuks.nl/Bills.avi 17 Mb

http://www.youtube.com/watch?v=-6MDHF39XmU&NR