Juan Aguero's Water-Fuel Engine

Patent Application EP0405919 1st February 1991 Inventor: Juan C. Aguero

WATER-PROPELLED INTERNAL-COMBUSTION ENGINE SYSTEM

Please note that this is a re-worded excerpt from this patent application. It describes a method which it is claimed is capable of operating an internal combustion engine from a mixture of steam and hydrogen gas.

ABSTRACT

This is an energy-transforming system for driving, for instance, an internal combustion engine which uses hydrogen gas as its fuel. The gas is obtained by electrolysing water on board and is then injected into the combustion chambers. The electrolysis is carried out in an electrolytic tank **15,** energised with electric current generated by the engine. The hydrogen passes from a reservoir **23,** via collector cylinder **29,** to carburettor device **39**. The hydrogen is then fed into the engine together with dry saturated steam and at least part of the hydrogen may be heated **51** prior to admission. A cooler and more controlled combustion is achieved with the steam and furthermore relatively lesser amounts of hydrogen are required. This is probably caused by the steam acting as a temperature moderator during admission and combustion of the hydrogen and additionally expanding during the expansion stroke.

FIELD OF THE INVENTION

The present invention refers to energy-converter systems, in particular related to an internal combustion engine fuelled by hydrogen gas, i.e. wherein the main propellant admitted to the combustion chambers is hydrogen. More particularly still, the present invention refers to method and means for obtaining hydrogen gas in an efficient and reasonably economical manner, and for supplying the gas to the combustion chambers under conditions for controlled ignition and optimum energy conversion. The present invention also refers to means and method for running an internal-combustion engine system from an available, cheap and non-contaminant hydrogen containing matter such as water as a fuel supply.

In general, the invention may find application in any system employing internal combustion principles, ranging from large installations such as electricity works to relatively smaller automobile systems like locomotives, lorries, motor-cars, ships and motor-boats. In the ensuing description, the invention is generally disclosed for application in the automotive field, however its adaptation and application in other fields may also be considered to be within the purview of the present invention.

BACKGROUND

Dwindling natural resources, dangerous contamination levels, increasing prices and unreliable dependence on other countries are making it increasingly necessary to search an alternative to fossil fuels like oil (hydrocarbons) and oil derivatives as the primary energy source in automobiles. To date, none of the attempted alternatives appears to have proved its worth as a substitute for petrol, either because of inherent drawbacks as to contamination, safety, cost, etc. or because man has not yet been able to find a practical way of applying the alternative energy forms to domestic motor cars.

For instance, electricity is a good alternative in the ecological sense, both chemically and acoustically, however it appears to be the least efficient form of energy known, which together with the high cost of manufacture of electric motors and the severe storage limitations insofar capacity and size have stopped it from coming into the market at least for the time being. The same is generally true even when solar energy is concerned.

Nuclear power is efficient, available and relatively cheap, but extremely perilous. Synthetic fuels may certainly be the answer in the future, however it appears that none practical enough have been developed. Use of gases such as methane or propane, or of alcohol distilled from sugar cane, has also been tried, but for one reason or another its marketing has been limited to small regions. Methanol for instance is a promising synthetic fuel, but it is extremely difficult to ignite in cold weather and has a low energy content (about half that of petrol).

The use of hydrogen gas as a substitute for petrol has been experimented lately. The chemistry investigator Derek P. Gregory is cited as believing that hydrogen is the ideal fuel in not just one sense. Hydrogen combustion produces steam as its only residue, a decisive advantage over contaminating conventional fuels such as petrol and coal. Unfortunately, hydrogen hardly exists on earth in its natural free form but only combined in chemical

compounds, from which it must be extracted using complicated, expensive and often hazardous industrial processes. In addition, if this obstacle were overcome, it would still be necessary to transport and store the hydrogen in service stations and moreover find a safe and practical way of loading and storing it in motor vehicles. Mercedes-Benz for one is experimenting with a vehicle equipped with a special tank for storing hydrogen gas and means for supplying the gas to the injection system, instead of the conventional petrol tank and circuit, without however yet achieving a satisfactory degree of safety and cost-efficiency. The use of dry hydrogen gas as a propellant has heretofore been found to produce a generally uncontrolled ignition, a large temperature excursion upwards which proved too destructive for the chamber walls. The engine life was limited to less than 10,000 km (about 6,000 miles).

DISCLOSURE OF THE INVENTION

The invention is based on the discovery of an energy-converter system to run an internal combustion engine and particularly is based on the discovery of a method and means for reliably, economically, safely and cleanly fuel an internal combustion engine with hydrogen, and obtaining the hydrogen in a usable form to this end from a cheap and plentifully available substance such as water. The hydrogen may be generated in optimum conditions to be fed into the engine.

According to the invention, hydrogen is obtained on board from a readily available hydrogenous source such as ionised water which is subjected to electrolysis, from whence the hydrogen is injected in each cylinder of the engine on the admission stroke. The hydrogen gas is mixed with water vapour (steam at atmospheric temperature) and surrounding air, and when this mixture is ignited within the combustion chamber, the steam (vapour) seems to act as a temperature moderator first and then assist in the expansion stroke. Preferably, the steam is dry saturated steam which, as a moderator, limits the maximum temperature of the combustion, thus helping to preserve the cylinder, valve and piston elements; and in assisting the expansion, the steam expands fast to contribute extra pressure on the piston head, increasing the mechanical output power of the engine. In other words, the inclusion of steam in the hydrogen propellant as suggested by the present invention moderates the negative effects of hydrogen and enhances the positive effects thereof in the combustion cycle.

As a result of this discovery, the amount of hydrogen required to drive the engine is lower than was heretofore expected, hence the electrolysis need not produce more than 10 cc/sec (for example, for a 1,400 cc engine). Thus the amount of electricity required for the electrolysis, a stumbling block in earlier attempts, is lower, so much so, that on-board hydrogen production is now feasible.

The invention includes an apparatus comprising a first system for generating hydrogen and a second system for conditioning and supplying the hydrogen to the admission valves on the cylinder caps. The hydrogen-generating system basically consists of an electrolysis device which receives electrolitically adapted (i.e. at least partially ionised) water or some other suitable hydrogenous substance. An electric power supply is connected to the electrodes of the electrolysis device for generating the hydrogen, and the electricity requirements and the device dimensions are designed for a maximum hydrogen output rate of about 10 cc/sec for a typical automotive application.

The second system comprises means such as a vacuum pump or the like to draw out the hydrogen from the first system, means for supplying the hydrogen gas to the admission valves, means for conditioning the moisture content of the hydrogen, carburettor means or the like for mixing the hydrogen with atmospheric air or some other combustion enabling substance, and means to control and maintain a specified gas pressure valve or range for the hydrogen supplied to the mixing means.

The apparatus was tested and worked surprisingly well. It was discovered that this seemed to be the result of the steam content in the electrolytic hydrogen gas overcoming the pitfalls encountered in the prior art systems which injected relatively dry gas into the cylinder chambers, or at the most with a relatively small proportion of humidity coming from the air itself.

In the preferred embodiment, the electrolysis system is driven with a pulsed DC power signal of up to 80 Amps at between 75 and 100 Volts. The electrolyte is distilled water salted with sodium chloride with a concentration of about 30 grams of salt per litre of water, to 150 grams of salt in 10 litres of water. Other concentrations are possible depending on the kind of engine, fuel and electricity consumption etc. The maximum rate of hydrogen production required for a typical domestic car engine has been estimated at 10 cc/sec. This hydrogen is drawn out by a pump generating a pressure head of around 2 Kg/cm^2 to feed the generated steam-containing hydrogen to a receptacle provided with means for removing the undesired excess of moisture from the gas. The gas is thus mixed with the desired content of steam when it enters the carburettor or mixing device.

In the event that the generated hydrogen does not have enough steam content, dry saturated steam may be added to the hydrogen as it proceeds to the engine. This may done conveniently, before it enters the carburettor

and is mixed with the intake air. Part of the gas may be shunted via a heat-exchanger serpentine connected to the exhaust manifold. This heats some of the gas before it is injected into the base of the carburettor. This heated gas injection operates like a supercharger. The main unheated hydrogen stream is piped directly into the venturi system of the carburettor, where it mixes with air drawn in by the admission stroke vacuum.

BRIEF DESCRIPTION OF THE DRAWINGS

Fig.1 is a schematic layout of the first and second systems and shows the electrolysis device for obtaining hydrogen, and the circuit means for injecting the steam-laden hydrogen into the combustion chambers of a car engine, according to one embodiment of this invention.

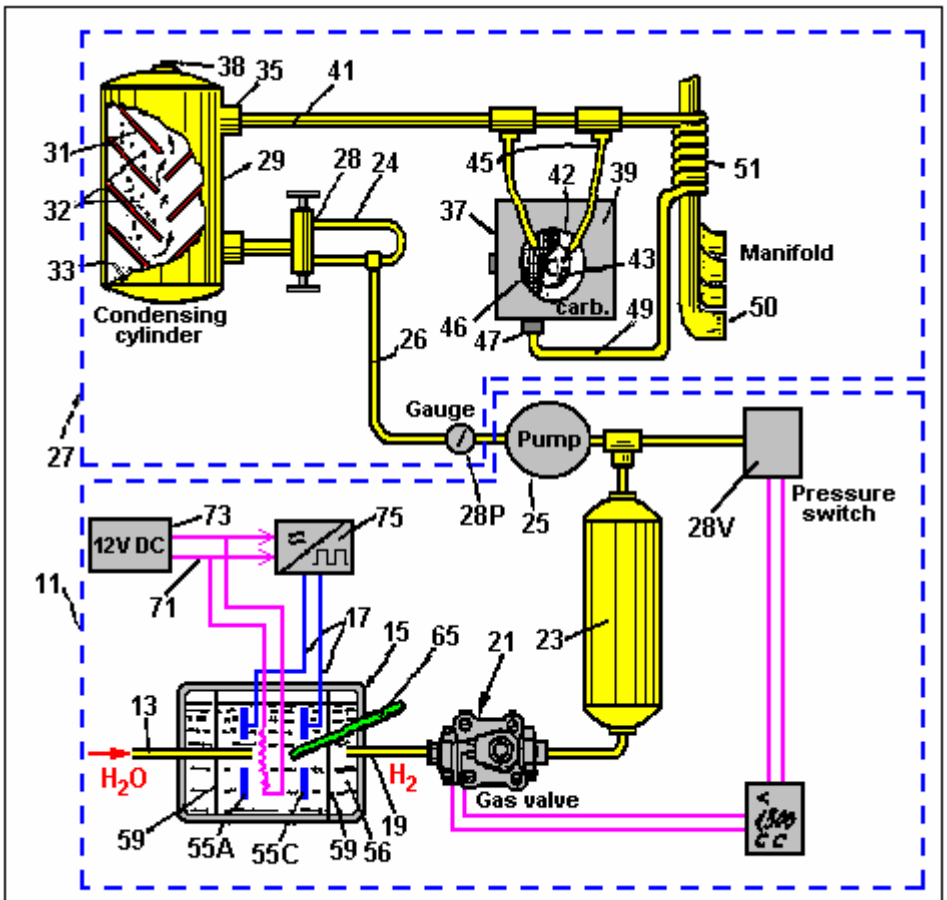

Fig.1

Figure 2 is an elevational view of the electrolysis device of figure 1.

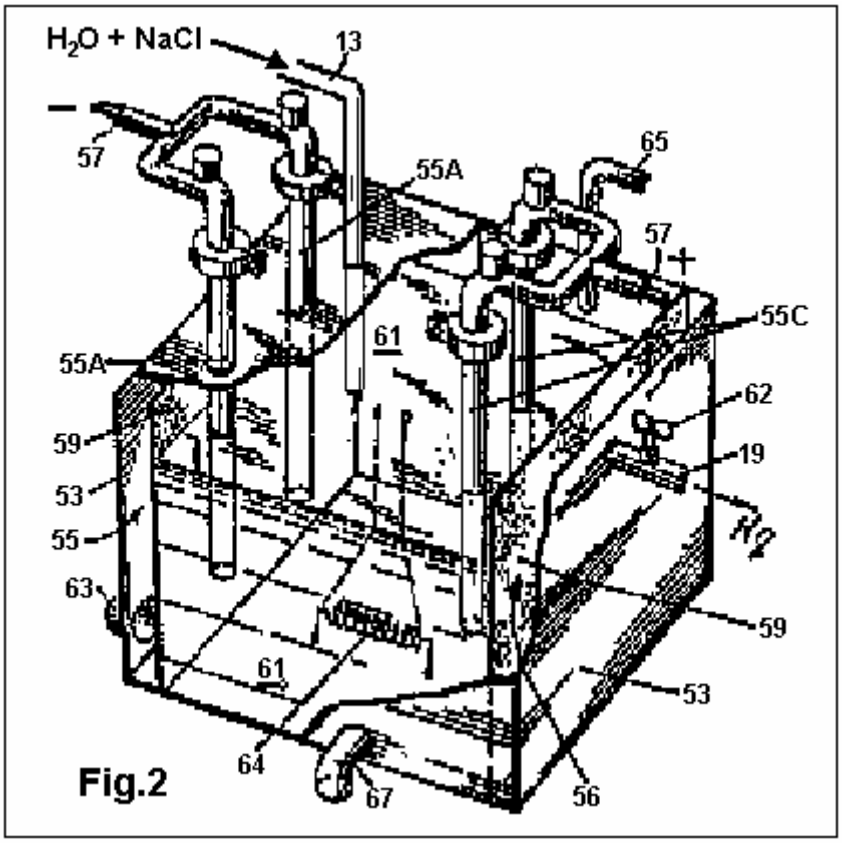

Fig.2

DETAILED ACCOUNT OF AN EMBODIMENT

Fig.1 shows a system **11** for obtaining hydrogen front water piped from a reservoir or tank (not illustrated) to an inlet **13** of an electrolysis cell **15**. The water is salted by adding sodium chloride to ionise it and enable electrolysis when electric power is applied to a pair of terminals **17**. As disclosed in more detail later, the power applied to the terminals **17** is in the form of a DC pulse signal of 65 Amps at 87 Volts, generated via a suitable converter from, in the event that the present system is applied to an automobile, the standard automotive 12 Volt DC level. The device **15** has various outlets, one of which is the hydrogen gas outlet **19** which is connected through a solenoid valve **21** to an accumulator or reservoir cylinder **23**. Other outlets of the electrolysis device **15** are for removing electrolysis effluents such as sodium hydroxide and chlorine gas, to which further reference is made below.

A vacuum pump **25** or similar, extracts gas from the reservoir **23** and channels it through a hydrogen circuit system **27**. Thus the reservoir **23** acts as a pressure buffer of a systems interface between the electrolysis device **15** and the pump **25**. The reservoir **23** may be a 2,000 cc capacity, stainless-steel cylinder with the valve **21** metering the passage of gas through it, so that the reservoir is initially filled with about 1,500 cc of hydrogen at normal pressure and temperature (NPT) conditions. To this end, the cylinder **23** may be provided with a gauge **28V** which controls the state of valve **21** electronically. Valve **21** may be a Jefferson Model SPS solenoid valve, available from OTASI, Santa Rosa 556, Córdoba, Argentina. Vacuum pump **25** is a diaphragm pump with a pulley drive and it is coupled by means of a transmission belt to the engine's crankshaft output. Such a device **25** may be a Bosch model available in Germany. The pulley drive is decoupled by an electromagnetic clutch when the pressure read by a gauge **28P** screwed into the outlet side of pump **25** exceeds 2Kg/sq. cm.

Pump **25** sends hydrogen through tubing **26**, which also includes a by-pass **24** provided for inspection and safety purposes together with a two-way valve **28**, and into a second cylinder **29** which contains means **31** which cause a turbulence or a labyrinthine movement in the gas, in order to condense the heavy mixture, schematically shown as droplets **32**, present in the gas stream. The condensed mixture collects in the form of distilled water **33** at the bottom of cylinder **29**. Near the top of the cylinder, there is an outlet **35** through which hydrogen gas, laden with a good amount of steam, is transported to mixer **37**. Also at the top of collector cylinder **29**, there is a temperature sensor **38** which is connected to an electronic digital thermometer circuit (not shown).

Mixer **37** comprises a carburettor device **39** for mixing hydrogen with air prior to feeding the mixture to the

combustion chambers. The hydrogen is piped through a 3/8" diameter tube **41** from dryer cylinder **29** and then into the venturi section **43** of the carburettor **39** through a pair of 5/16" diameter tubes or hydrogen injecting nozzles **45**. The venturi section **43** is a section of the intake air passage which narrows to increase the air speed at the point where hydrogen is drawn out for mixing. The venturi intake **42** may be covered by a mesh **46**. However, it appears that no air filter is needed for the mixer to operate well. The carburettor device **39** may be a simplified form of a conventional carburettor, since the propellant, i.e. hydrogen gas, is fed directly to the venturi **43**. A butterfly valve, or the like, connected to an accelerator pedal (not illustrated) of the motor-car, controls the air intake rate and therefore the speed of the engine. This mixer device **39** is mounted as is a conventional carburettor, such that its outlet at the bottom communicates with the admission valves in the cylinder caps.

At the bottom part of the carburettor there is a supplementary hydrogen intake **47** connected to another 3/8" diameter pipe **49** which shunts part of the hydrogen through a heater **51**. This heater comprises a serpentine tube **51** of a chromium/cobalt alloy, mounted in close heat-exchange relationship with the body of the exhaust manifold **50** (schematically illustrated) in order to add a portion of heated gas to the fuel mixture before it is drawn into the combustion chambers through the corresponding admission valves on the cylinder caps. This pre-admission heating step, takes the hydrogen mixture to a near critical temperature for detonation. It has been found that this improves performance (e.g. the engine smoothness) at some speed ranges, and it works like a supercharger.

In practice, the engine of the present invention has shown a high efficiency when using three-electrode sparking plugs and an electronic ignition system (not illustrated).

Fig.2 shows the electrolysis cell **15** outlined in **Fig.1** in more detail. It is comprised of a rectangular prism reservoir **53** with a pair of spaced-apart vertical electrodes **55**. The reservoir may measure, for instance, 24 cm long by 20 cm wide and 28 cm high. Both the anode and cathode **55** may each comprise double electrodes of carbon having a spacing between the electrodes **55** of the same polarity of about 10 cm. Alternatively, the anode **55A** may be a ring made of carbon while the cathode **55C** is an iron-mesh cylindrical electrode. Each electrode **55** has a terminal **57** at the top for inputting electric power as mentioned earlier. At each outer side of the electrodes **55** there is a porous membrane **59** made from a sheet of amianto (asbestos) for holding the water solution **61** in whilst at the same time letting the electrolysis products, i.e. hydrogen and oxygen, pass through. Thus, the hydrogen gas passes through the membrane **59** into a gas collector chamber **56** and exits out through pipe **19** to fuel the combustion engine. The hydrogen pipe **19** may have a proportioning valve **62** for regulating the flow of hydrogen. The oxygen on the other hand may be vented out into the atmosphere through an outlet **63**.

There is a heater element **64,** immersed in the salted water **61** fed through a resistor connected to a 12 Volt DC supply. This heats the water to about 85 degrees C (185 degrees F) to enhance the galvanic action of the electrolysis current on the aqueous solution **61**. A thermostat with a solid state silicon thermal sensor may be used to control the water temperature via a threshold comparator driving a relay which controls the current in the heater element **64**.

The electrolysis of the heated salted water solution **61** further produces, as effluents, chlorine gas (Cl_2) and sodium hydroxide (NaOH). The chlorine gas may be vented through an opening **65** at the top of the reservoir **53** or else stored in an appropriate disposal tank (not shown). The sodium hydroxide precipitates and may be removed periodically through tap **67** at the bottom of the electrolysis cell.

It is important to note that the practice of the present invention requires practically no modifications in the engine itself. That is, existing petrol engines may be used with hardly any adjustments. Ignition is initiated at the dead top of the compression stroke or with a 1.5 degree lag at the most, and it has been found convenient to widen the gaps of the admission and exhaust valve pushers and use tri-electrode spark plugs. However it is advisable to use some rust-resistant compound such as plastics for the exhaust pipe and silencer, bearing in mind that the combustion residue is hot steam.

Fig.1 also shows schematically, the electric power supply **71** connected to the terminals **17** of the cube **15**. Electrical current is obtained at 12 volt DC from the car battery/alternator system **73** and processed by an inverter device **75** for generating DC pulses of 65 Amps at 87 Volts. Pulse energisation of the electrolysis appears to maximise the ratio of hydrogen output rate to electric power input.

CLAIMS

1. A method of providing propellant to an internal combustion engine wherein combustion is fuelled on the basis of hydrogen gas admitted into at least one combustion chamber of the engine during the intake stroke, characterised in that the hydrogen is injected into the combustion chamber together with vapour.

2. The method of claim 1, characterised in that the surrounding air enters the combustion chamber, together with the hydrogen and vapour.

3. The method of claim 2, characterised in that the hydrogen gas is obtained from water which is continuously subjected to electrolysis energised by the engine.

4. The method of claim 2 or 3, characterised in that the hydrogen is generated at a rate of not more than 10 cc/sec.

5. The method of any of the preceding claims, characterised in that the engine drives a motor-car.

6. The method of any of preceding claims, characterised in that the vapour is added to the hydrogen prior to entering the combustion chamber.

7. The method of any of claims 1 to 5, characterised in that the vapour is contained in the hydrogen when generated.

8. The method of any of the preceding claims, characterised in that the vapour is dry saturated steam.

9. A method of driving a internal combustion engine with water as its primary source of energy, characterised by the steps of subjecting the water to hydrolysis thereby producing gaseous hydrogen, and
controllably supplying the hydrogen produced by the hydrolysis to the engine combustion chambers during the admission stroke of each cylinder together with a proportion of steam.

10. The method of claim 9, characterised in that the steam is dry saturated steam.

11. The method of any of claims 9 or 10, characterised in that the hydrolysis driven by electric power to produce not more than 10 cc/sec of the hydrogen gas.

12. The method of any of claims 9 to 11, characterised in that the engine drives a motor-car including a water tank as its main propellant supply.

13. The method of any of claims 9 to 12, characterised in that at least part of the hydrogen is heated before injecting it into the chamber.

14. The method of any claims of 9 to 13, characterised in that steam is obtained together with the hydrogen gas from the electrolysis and then subjected to a drying cycle up to a predetermined point of saturation before being passed into the chambers.

15. The method of claim 11, characterised in that the hydrolysis means is supplied with about 5 kW pulsed electrical power.

16.A method of injecting propellant into an hydrogen-driven internal combustion engine cylinder during the admission stroke thereof, characterised in that dry steam is passed into said cylinder during the intake stroke to moderate temperature generation of the hydrogen ignition and enhance expansion after ignition has begun to increase the power of the pistons.

17. A method of obtaining hydrogen capable of being used to fuel an internal combustion engine, characterised by dissociating hydrogen gas from a hydrogenous compound, and admitting the hydrogen gas into each cylinder of said engine together with an amount of dry steam.

18. The method of claim 17, characterised in that the hydrogen gas is admitted to the engine cylinders at a rate of not more than 10 cc/sec.

19. The method of claim 17 or 18, characterised in that the compound is slightly salted water and the steam is saturated steam.

20. A system for obtaining and providing hydrogen propellant to an internal combustion engine including at least one cylinder containing a piston which is subjected to successive combustion cycles and injection means for admitting fuel into the cylinder on the intake or admission stroke of the cycle, characterised by comprising: fuel source means for containing a hydrogenous compound, electrolysis means (**15**) having at least one pair of electrodes (**55**) for receiving electric power and intake means (**13**) connected to the source for supplying the compound to the electrolysis means, a means (**27, 37**) for extracting hydrogen gas from one of the electrodes and supplying it to the cylinder injection means, and control means (**25, 28, 29**) for controlling the supply of hydrogen gas to the cylinder injection means whereby the rate of gas consumption in the engine is not more than 10 cc/sec.

21. The system of claim 20, characterised in that the means supplying hydrogen gas to the cylinder injection means further include means (**37**) for mixing said hydrogen gas with steam.

22. The system of claim 20 or 21, characterised in that the compound is water and the source means includes a water tank, the water including salt to facilitate electrolysis.

23. The system of claim 20, 21 or 22, characterised in that the control means include means (**29**) for removing the excessive moisture from the hydrogen gas extracted from the hydrolysis means.

24. The system of any of claims 20 to 23, characterised in that the electrolysis means is energised by the engine.

25. An internal combustion engine operating on hydrogen and having a water tank as its primary source of combustion fuel, a cylinder block containing at least one cylinder chamber, each chamber, having an associated piston, fuel intake means, ignition means, and exhaust means, and crankshaft means coupled to be driven by the pistons for providing mechanical output power from the engine, and characterised by further comprising: electrolysis means (**15**) connected to the water tank for electrolysing water to obtain hydrogen, electrical means (**17**) connected to supply electric power to at least one pair of electrodes (**55**) of the electrolysis means for carrying out the electrolysis of the water, and hydrogen circuit means (**27**) for extracting the hydrogen gas from the electrolysis means and passing it onto said intake means in a manner enabling controlled ignition and expansion of the fuel in the chamber.

26. The engine of claim 25, characterised in that said hydrogen circuit means passes hydrogen gas to the intake means at a rate of not more than 10 cc/sec.

27. The engine of claim 25 or 26, characterised by further comprising means for adding steam into each chamber before ignition of the hydrogen.

28. The engine of claim 27, characterised in that the steam adder means comprises means (**25**) for extracting steam from the electrolysis means, and means (**29**) for subjecting said steam to a drying process up to a pre-determined point.

29. The engine of any of claims 25 to 28, characterised by further comprising means (**49, 51**) for heating at least part of the hydrogen gas before it is passed into the chambers.

30. The engine of claim 29, characterised in that said heating means is a serpentine (**51**) inserted in a shunt (**49**) of the hydrogen circuit means and mounted in heat-exchange relationship on a manifold exhaust of the engine.

31. The engine of any of claims 25 to 30, characterised in that said electrical means include pulse generator means for supplying electrical pulses to said at least one pair of electrodes.

32. The engine of claim 31, characterised in that said pulse generator means supplies electrical DC pulses of between 50 and 75 Amps at between 60 and 100 Volts.

33. The engine of any of claims 25 to 32, characterised in that said hydrogen circuit means includes drying means (**33**) for removing excess moisture from the hydrogen extracted from the electrolysis means.

34. The engine of any of claims 25 to 33, characterised in that said crankshaft means drives a water-fuelled automobile.

35. The engine of any of claims 25 to 34, characterised in that the electrolysis means is driven by electricity derived from the engine.

The HHO Fuel System of Stephen Horvath

US Patent 3,980,053 14th September 1976 Inventor: Stephen Horvath

FUEL SUPPLY APPARATUS FOR INTERNAL COMBUSTION ENGINES

Please note that this is a re-worded excerpt from this patent. It describes the water-splitting procedure of Stephen Horvath.

ABSTRACT

A fuel supply apparatus generates hydrogen and oxygen by electrolysis of water. There is provided an electrolytic cell which has a circular anode surrounded by a cathode with a porous membrane between them. The anode is fluted and the cathode is slotted to provide anode and cathode areas of substantially equal surface area. A pulsed electrical current is provided between the anode and cathode for the efficient generation of hydrogen and oxygen.

The electrolytic cell is equipped with a float, which detects the level of electrolyte within the cell, and water is added to the cell as needed to replace the water lost through the electrolysis process. The hydrogen and oxygen are collected in chambers which are an integral part of the electrolytic cell, and these two gases are supplied to a mixing chamber where they are mixed in the ratio of two parts hydrogen to one part oxygen. This mixture of hydrogen and oxygen flows to another mixing chamber wherein it is mixed with air from the atmosphere.

The system is disclosed as being installed in an car, and a dual control system, which is actuated by the car throttle, first meters the hydrogen and oxygen mixture into the chamber wherein it is combined with air and then meters the combined mixture into the car engine. The heat of combustion of a pure hydrogen and oxygen mixture is greater than that of a gasoline and air mixture of comparable volume, and air is therefore mixed with the hydrogen and oxygen to produce a composite mixture which has a heat of combustion approximating that of a normal gas-air mixture. This composite mixture of air, hydrogen and oxygen then can be supplied directly to a conventional internal combustion engine without overheating and without creation of a vacuum in the system.

BACKGROUND OF THE INVENTION

This invention relates to internal combustion engines. More particularly it is concerned with a fuel supply apparatus by means of which an internal combustion engine can be run on a fuel comprised of hydrogen and oxygen gases generated on demand by electrolysis of water.

In electrolysis a potential difference is applied between an anode and a cathode in contact with an electrolytic conductor to produce an electric current through the electrolytic conductor. Many molten salts and hydroxides are electrolytic conductors but usually the conductor is a solution of a substance which dissociates in the solution to form ions. The term "electrolyte" will be used herein to refer to a substance which dissociates into ions, at least to some extent, when dissolved in a suitable solvent. The resulting solution will be referred to as an "electrolyte solution".

Faraday's Laws of Electrolysis provide that in any electrolysis process the mass of substance liberated at an anode or cathode is in accordance with the formula

$$m = z\,q$$

where m is the mass of substance liberated in grams, z is the electrochemical equivalent of the substance, and q is the quantity of electricity passed, in coulombs. An important consequence of Faraday's Laws is that the rate of decomposition of an electrolyte is dependent on current and is independent of voltage. For example, in a conventional electrolysis process in which a constant current I amps flows to t seconds, q = It and the mass of material deposited or dissolved will depend on I regardless of voltage, provided that the voltage exceeds the minimum necessary for the electrolysis to proceed. For most electrolytes, the minimum voltage is very low.

There have been previous proposals to run internal combustion engines on a fuel comprised of hydrogen gas. Examples of such proposals are disclosed in U.S. Pat. Nos. 1,275,481, 2,183,674 and 3,471,274 and British specifications Nos., 353,570 and 364,179. It has further been proposed to derive the hydrogen from electrolysis of water, as exemplified by U.S. Pat. No. 1,380,183. However, none of the prior art constructions is capable of producing hydrogen at a rate such that it can be fed directly to internal combustion engines without intermediate

storage. The present invention enables a fuel comprised of hydrogen and oxygen gases to be generated by electrolysis of water at such a rate that it can sustain operation of an internal combustion engine. It achieves this result by use of an improved electrolysis process of the type generally proposed in the parent application hereof.

As disclosed in my aforesaid parent application the prior art also shows electrolytic reactions employing DC or rectified AC which necessarily will have a ripple component; an example of the former being shown for instance in Kilgus U.S. Pat. No. 2,016,442 and an example of the latter being shown in Emich al. U.S. Pat. No. 3,485,742. It will be noted that the Kilgus Patent also discloses the application of a magnetic field to his electrolyte, which field is said to increase the production of gas at the two electrodes.

SUMMARY OF THE INVENTION

The apparatus of the invention applies a pulsating current to an electrolytic solution of an electrolyte in water. Specifically, it enables high pulses of quite high current value and appropriately low voltage to be generated in the electrolyte solution by a direct input supply to produce a yield of electrolysis products such that these products may be fed directly to the internal combustion engine. The pulsating current generated by the apparatus of the present invention is to be distinguished from normal variations which occur in rectification of AC current and as hereinafter employed the term pulsed current will be taken to mean current having a duty cycle of less than 0.5.

It is a specific object of this invention to provide a fuel supply apparatus for an internal combustion engine by which hydrogen and oxygen gases generated by electrolysis of water are mixed together and fed directly to the internal combustion engine.

A still further object of the invention is to provide, for use with an internal combustion engine having inlet means to receive a combustible fuel, fuel supply apparatus comprising:

a vessel to hold an electrolyte solution of electrolyte dissolved in water;

an anode and a cathode to contact the electrolyte solution within the vessel;

electrical supply means to apply between said diode and said cathode pulses of electrical energy to induce a pulsating current in the electrolyte solution thereby to generate by electrolysis hydrogen gas at the cathode and oxygen gas at the anode;

gas collection and delivery means to collect the hydrogen and oxygen gases and to direct them to the engine inlet means; and

water admission means for admission of water to said vessel to make up loss due to electrolysis.

In order that the invention may be more fully explained one particular example of an car internal combustion engine fitted with fuel supply apparatus in accordance with the invention will now be described in detail with reference to the accompanying drawings.

BRIEF DESCRIPTION OF THE DRAWINGS

Fig.1 is a plan view of part of the car with its engine bay exposed to show the layout of the fuel supply apparatus and the manner in which it is connected to the car engine;

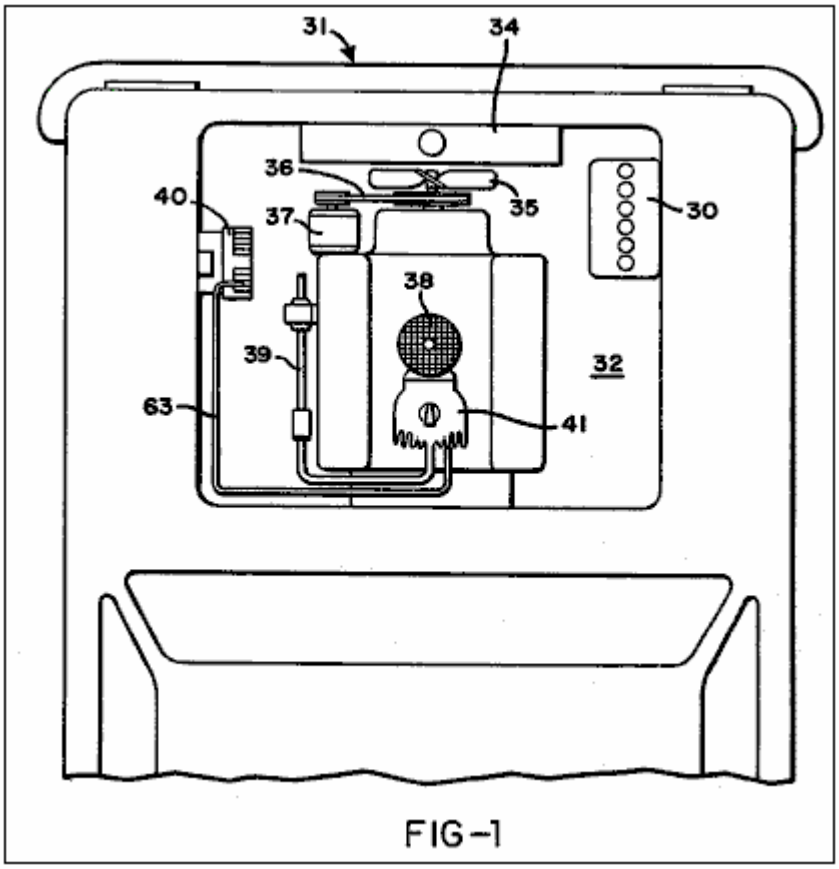

Fig.2 is a circuit diagram of the fuel supply apparatus;

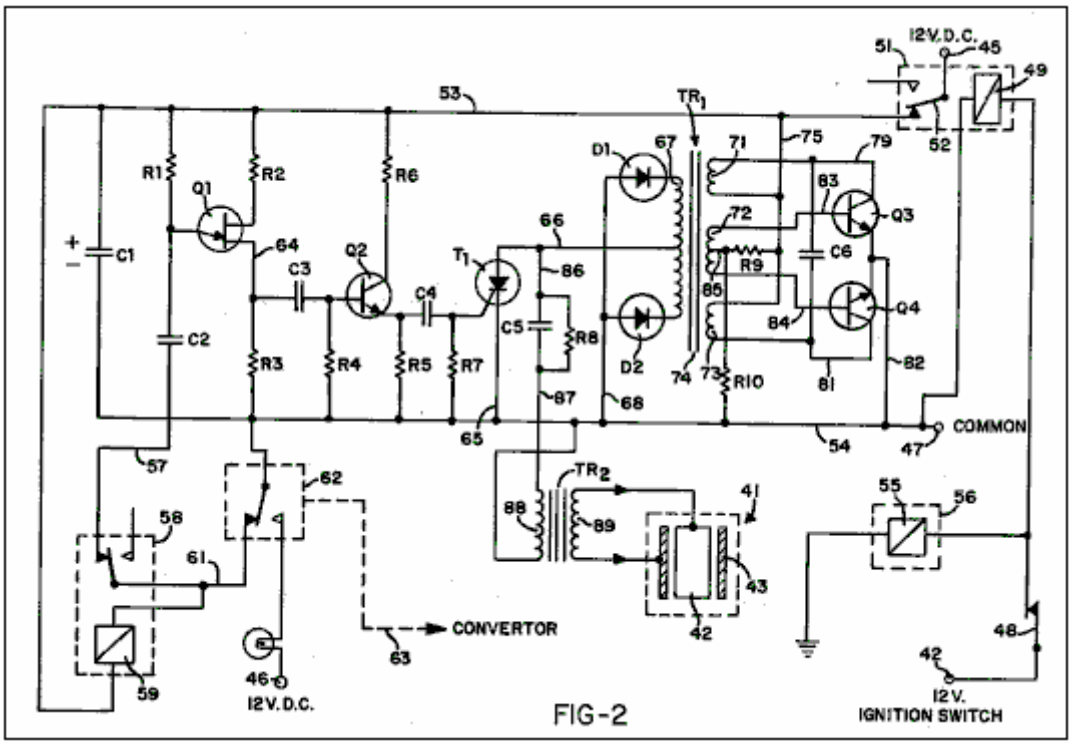

Fig.3 is a plan view of a housing which carries electrical components of the fuel supply apparatus;

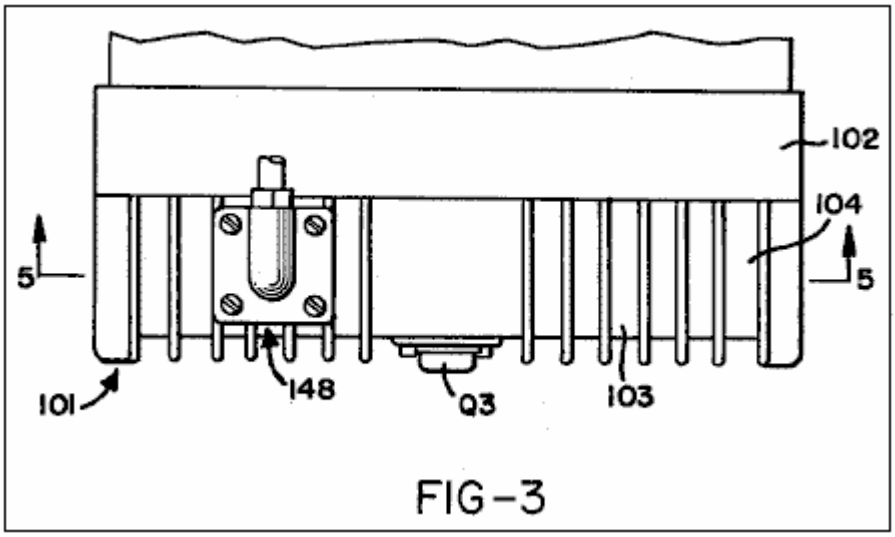

FIG-3

Fig.4 is an elevation view of the housing shown in Fig.3;

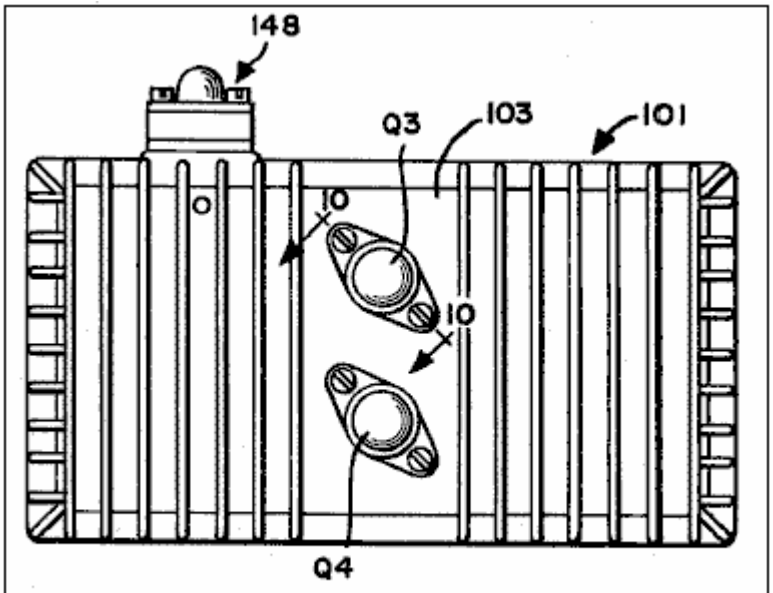

FIG-4

Fig.5 is a cross-section on the line 5--5 in Fig.3;

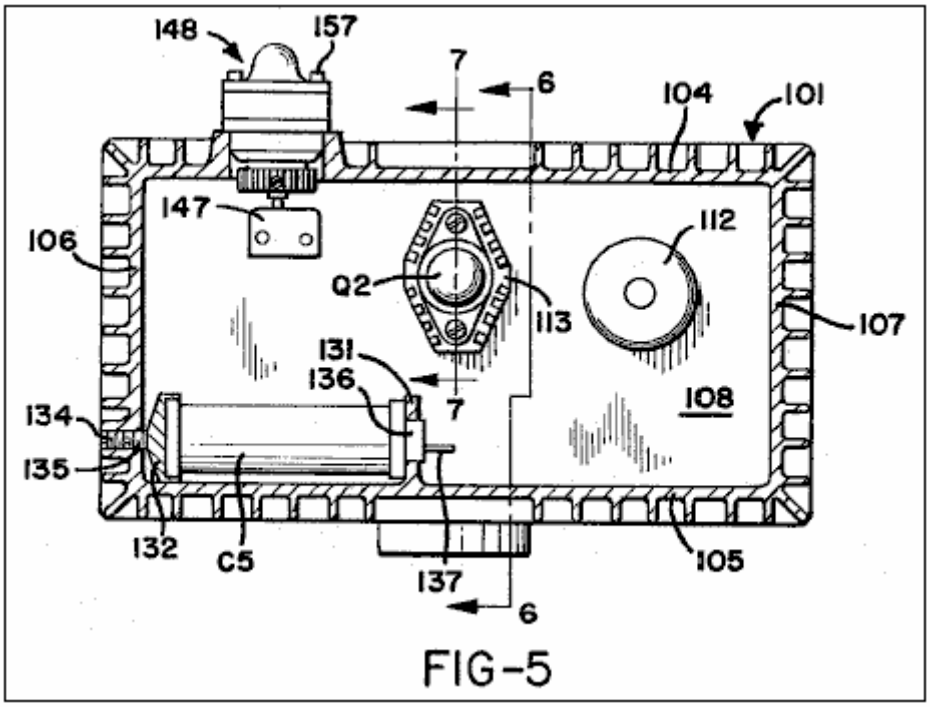

FIG-5

Fig.6 is a cross-section on the line 6--6 in Fig.3;

Fig.7 is a cross-section on the line 7--7 in Fig.5;

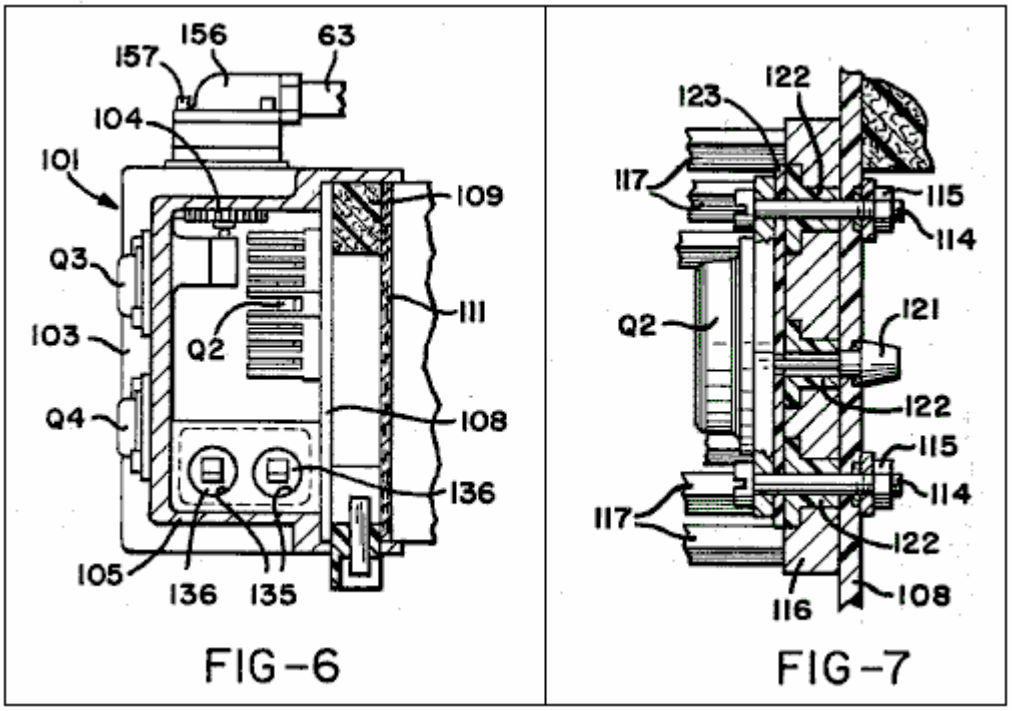

FIG-6 FIG-7

Fig.8 is a perspective view of a diode heat sink included in the components illustrated in Fig.5 and Fig.7;

Fig.9 illustrates a transformer coil assembly included in the electrical components mounted within the housing;

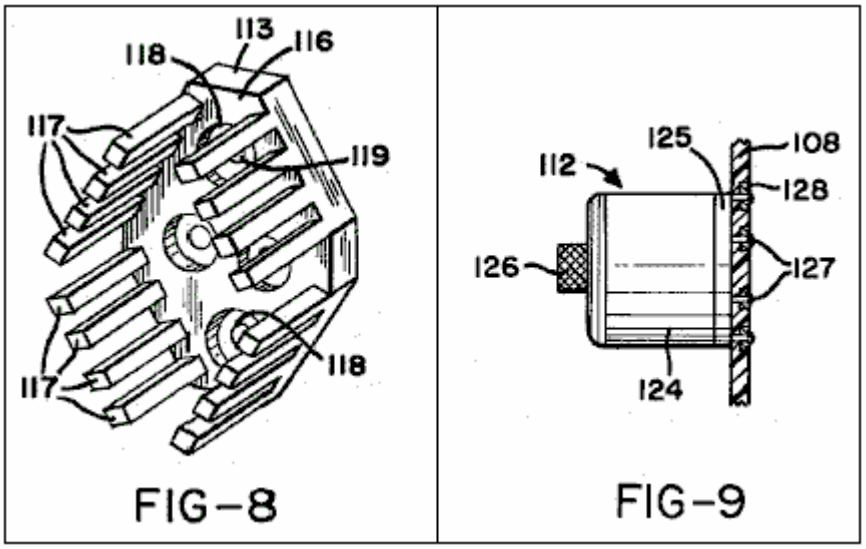

Fig.10 is a cross-section on the line 10--10 in Fig.4;

Fig.11 is a cross-section on the line 11--11 in Fig.5;

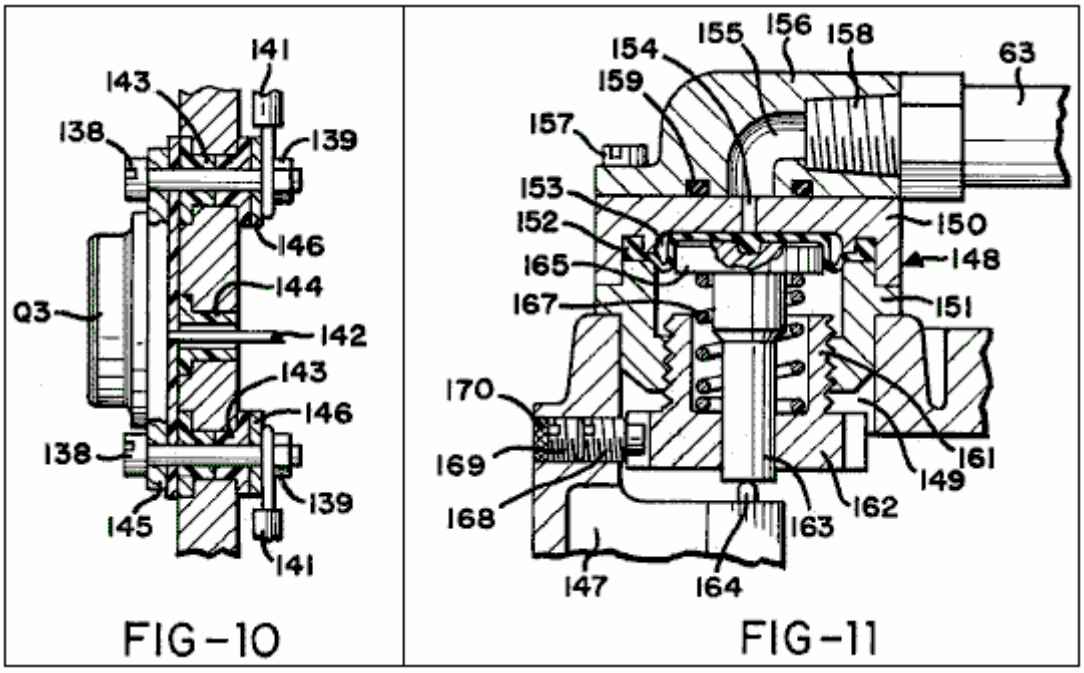

Fig.12 is a cross-section through a terminal block mounted in the floor of the housing;

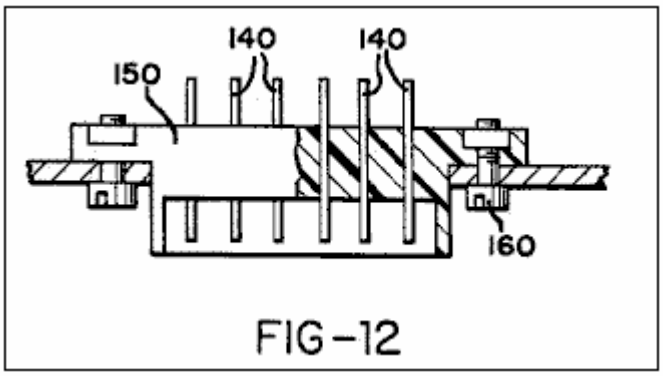

Fig.13 is a plan view of an electrolytic cell incorporated in the fuel supply apparatus;

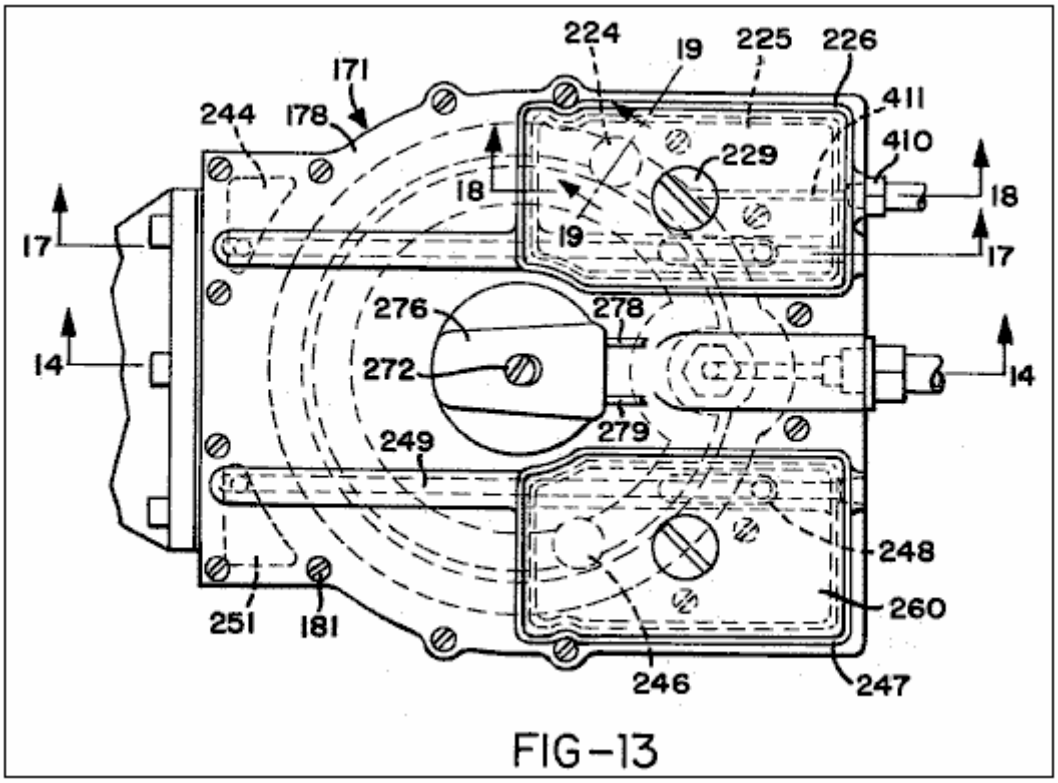

FIG-13

Fig.14 is a cross-section on the line 14--14 in Fig.13;

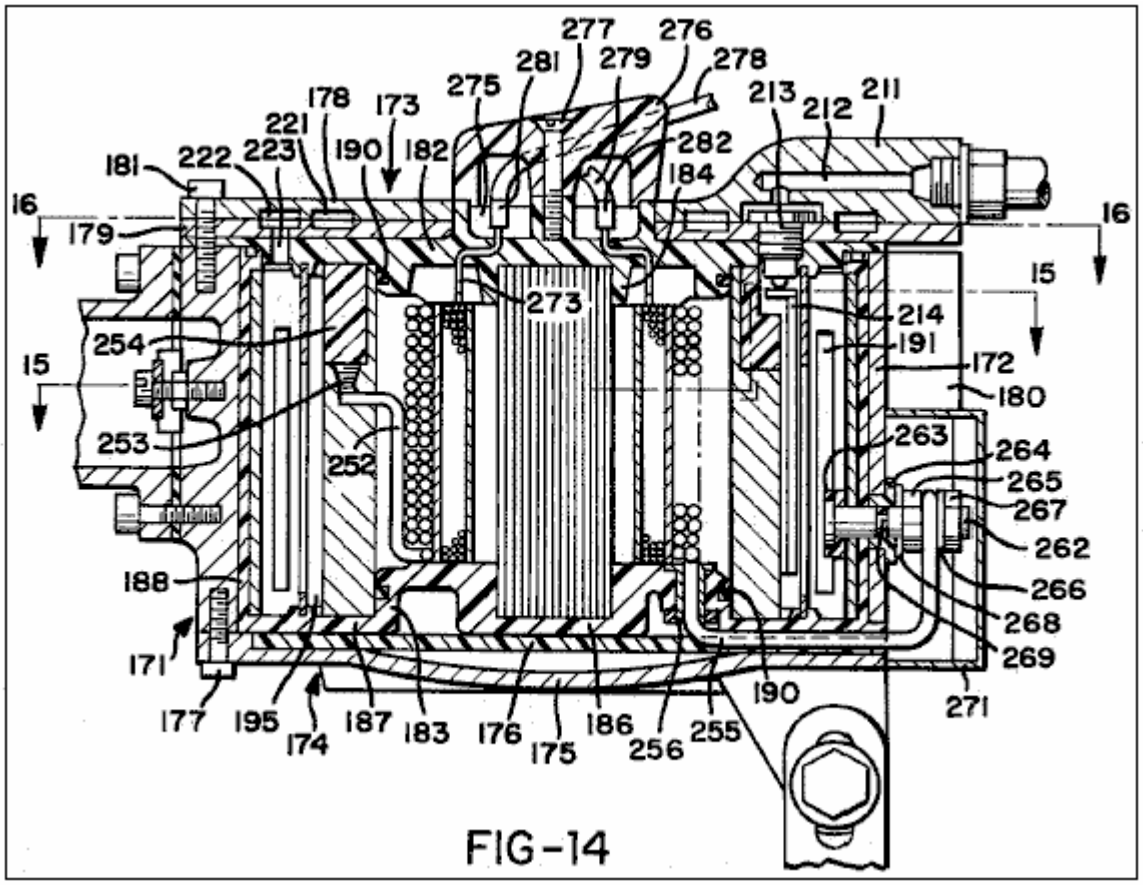

FIG-14

Fig.15 is a cross-section generally on the line 15--15 in Fig.14;

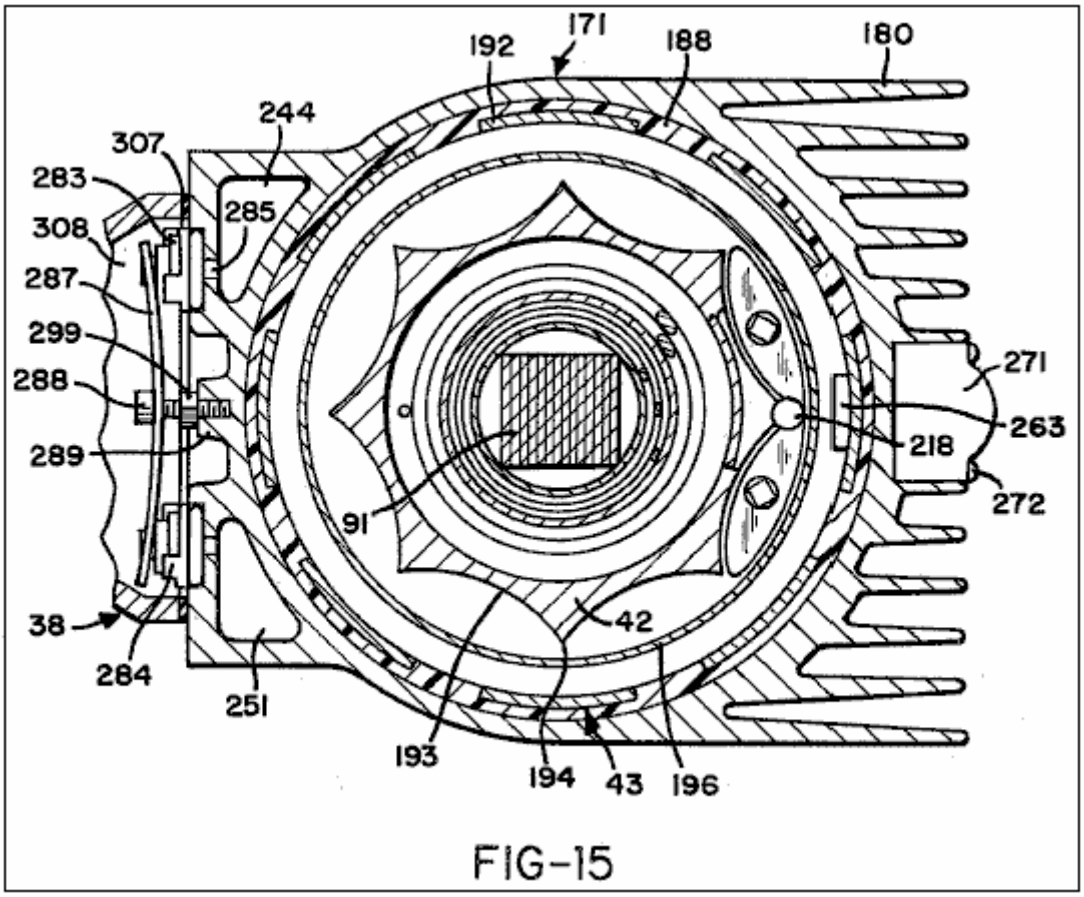

FIG-15

Fig.16 is a cross-section on the line 16--16 in Fig.14;

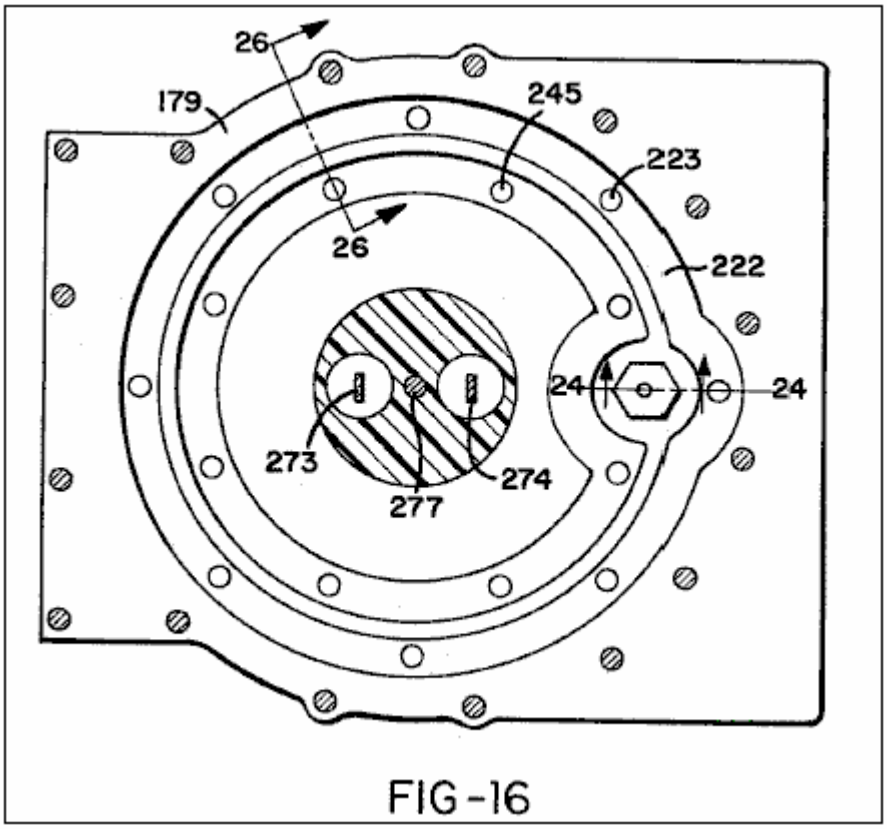

FIG-16

Fig.17 is a cross-section on the line 17--17 in Fig.13;

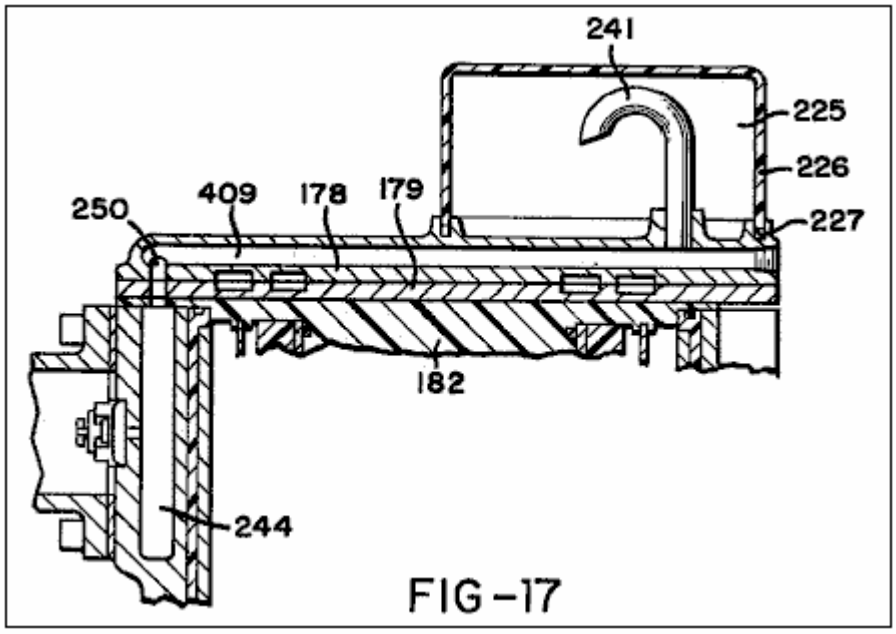

FIG-17

Fig.18 is a cross-section on the line 18--18 of Fig.13;

Fig.19 is a vertical cross-section through a gas valve taken generally on line 19--19 in Fig.13;

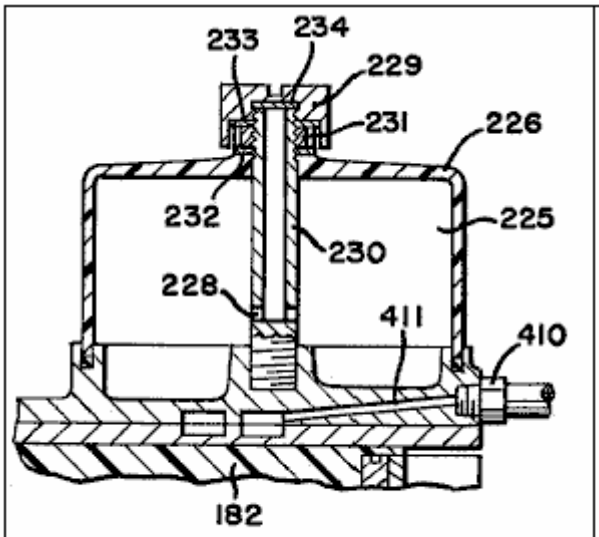

FIG-18

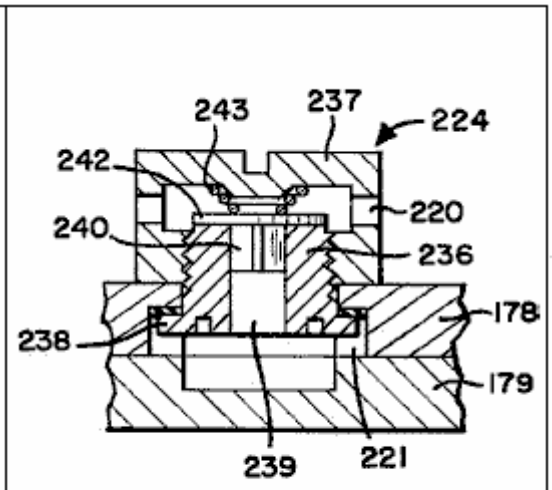

FIG-19

Fig.20 is a perspective view of a membrane assembly disposed in the electrolytic cell;

Fig.21 is a cross-section through part of the membrane assembly;

Fig.22 is a perspective view of a float disposed in the electrolytic cell;

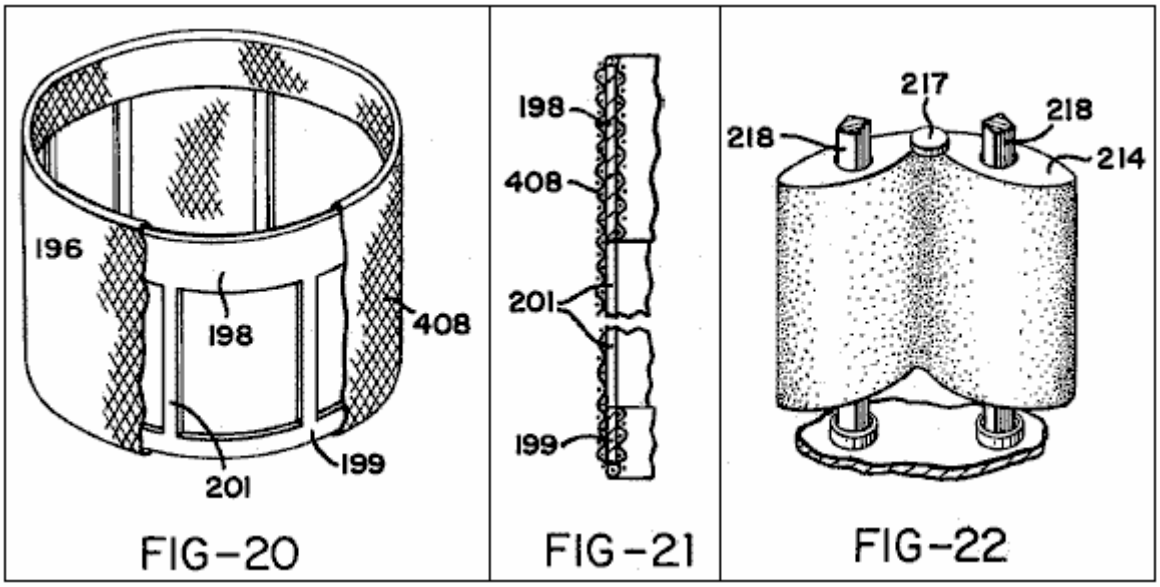

Fig.23 is an enlargement of part of Fig.14;

Fig.24 is an enlarged cross-section on the line 24--24 in Fig.16;

Fig.25 is a perspective view of a water inlet valve member included in the components shown in Fig.24;

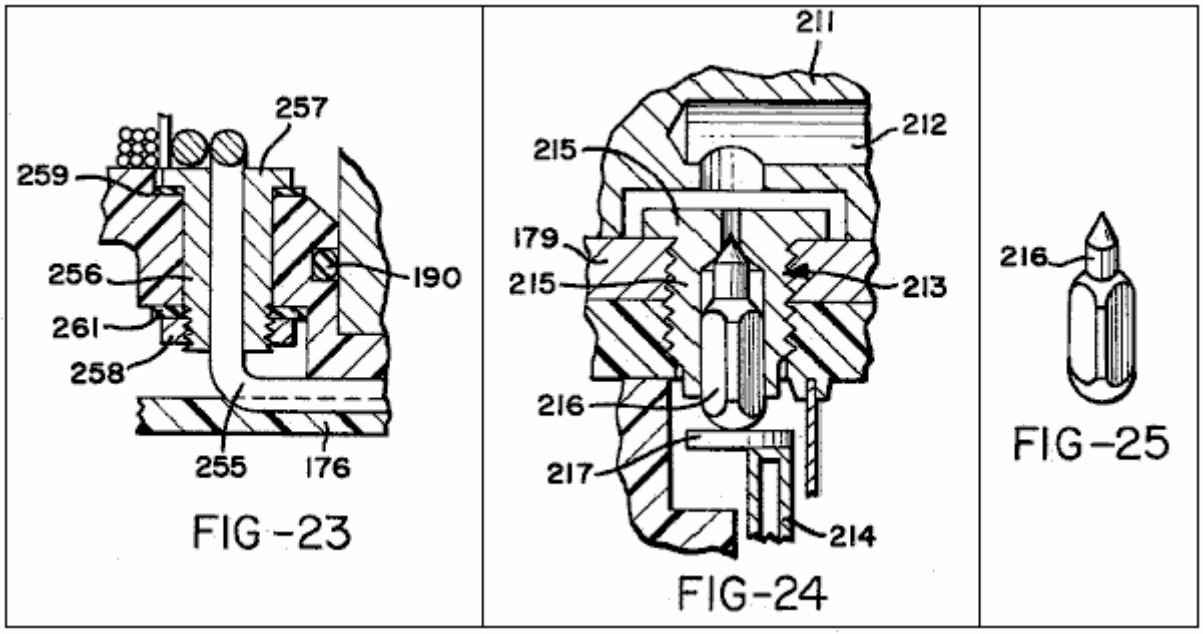

Fig.26 is a cross-section on line 26--26 in Fig.16;

Fig.27 is an exploded and partly broken view of a cathode and cathode collar fitted to the upper end of the cathode;

Fig.28 is an enlarged cross-section showing some of the components of Fig.15;

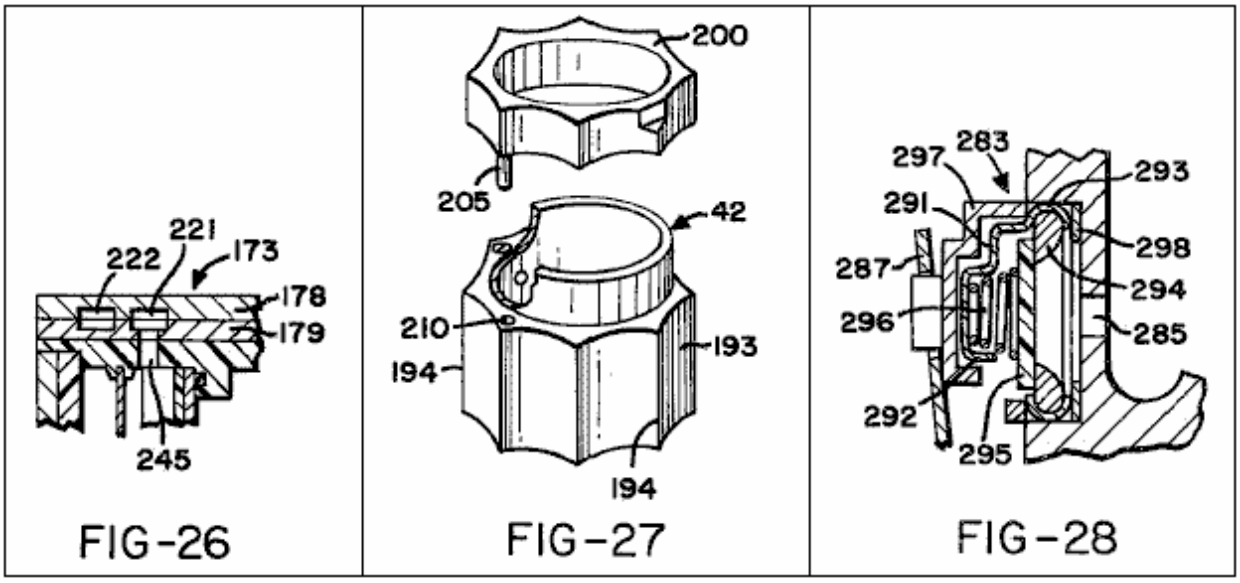

Fig.29 is a perspective view of a valve cover member;

Fig.30 shows a gas mixing and delivery unit of the apparatus generally in side elevation but with an air filter assembly included in the unit shown in section;

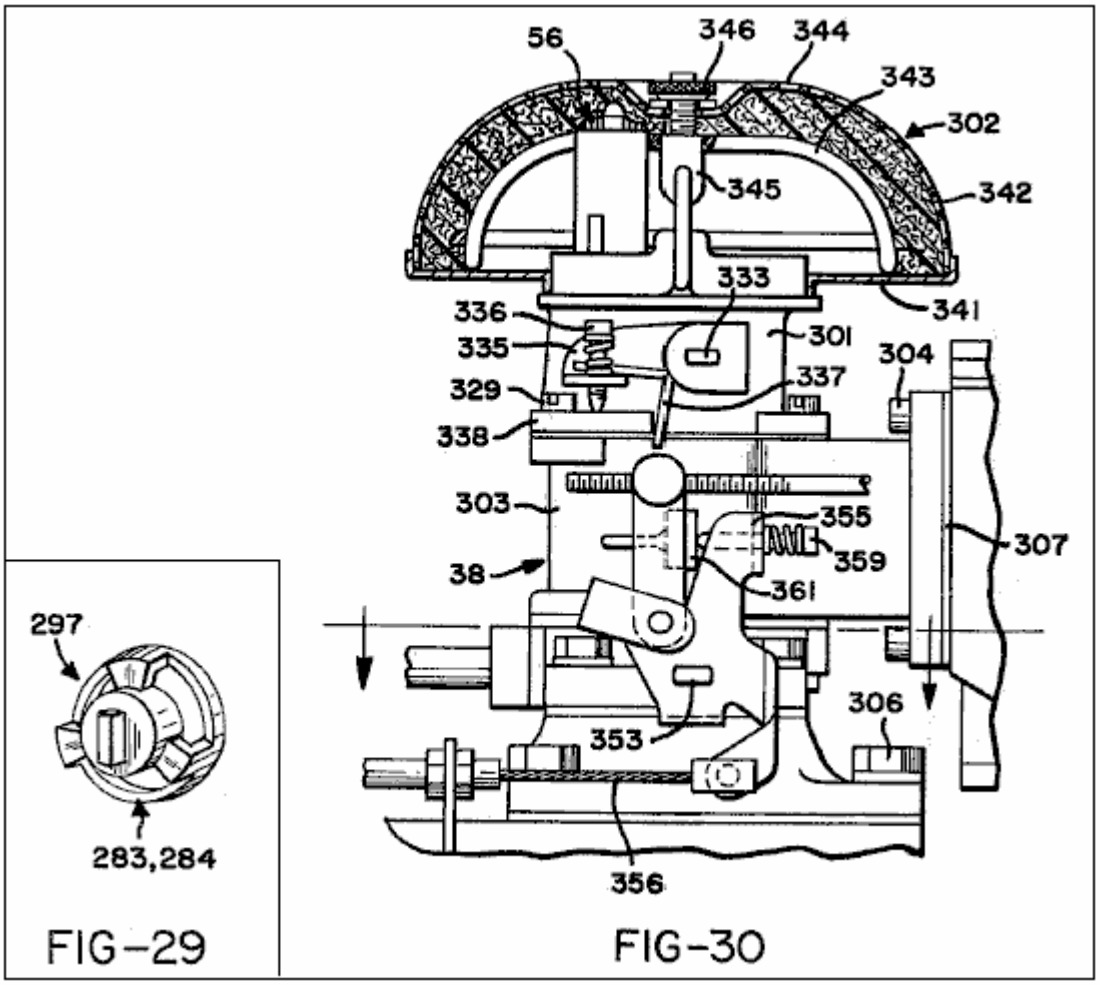

Fig.31 is a vertical cross-section through the gas mixing and delivery unit with the air filter assembly removed;

Fig.32 is a cross-section on the line 32--32 in Fig.31;

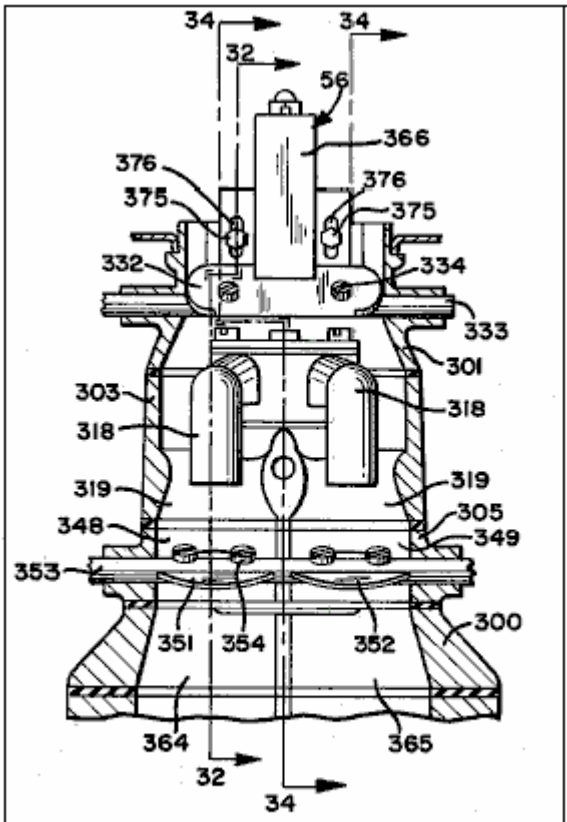

FIG-31

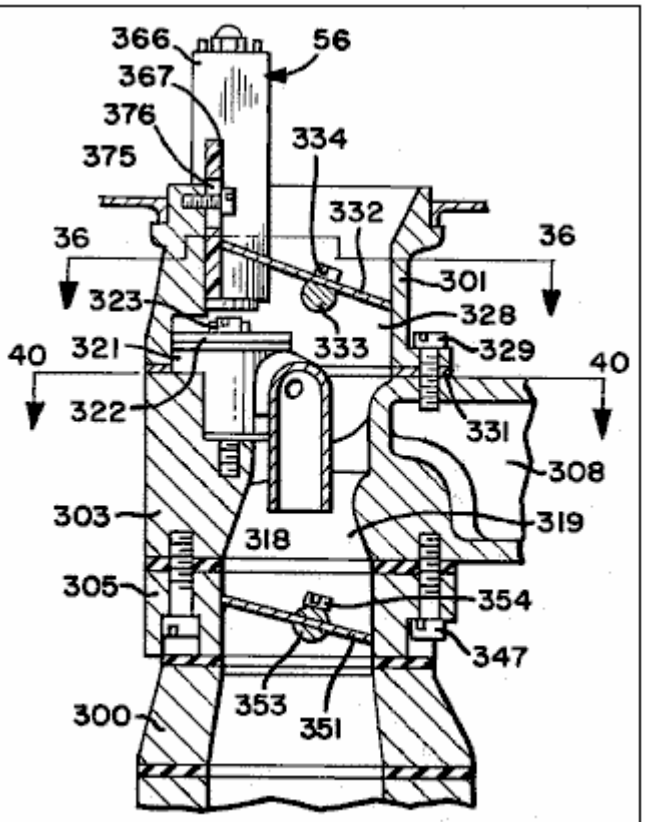

FIG-32

Fig.33 is a perspective view of a valve and jet nozzle assembly incorporated in the gas mixing and delivery unit;

Fig.34 is a cross-section generally on the line 34--34 in Fig.31;

Fig.35 is a cross-section through a solenoid assembly;

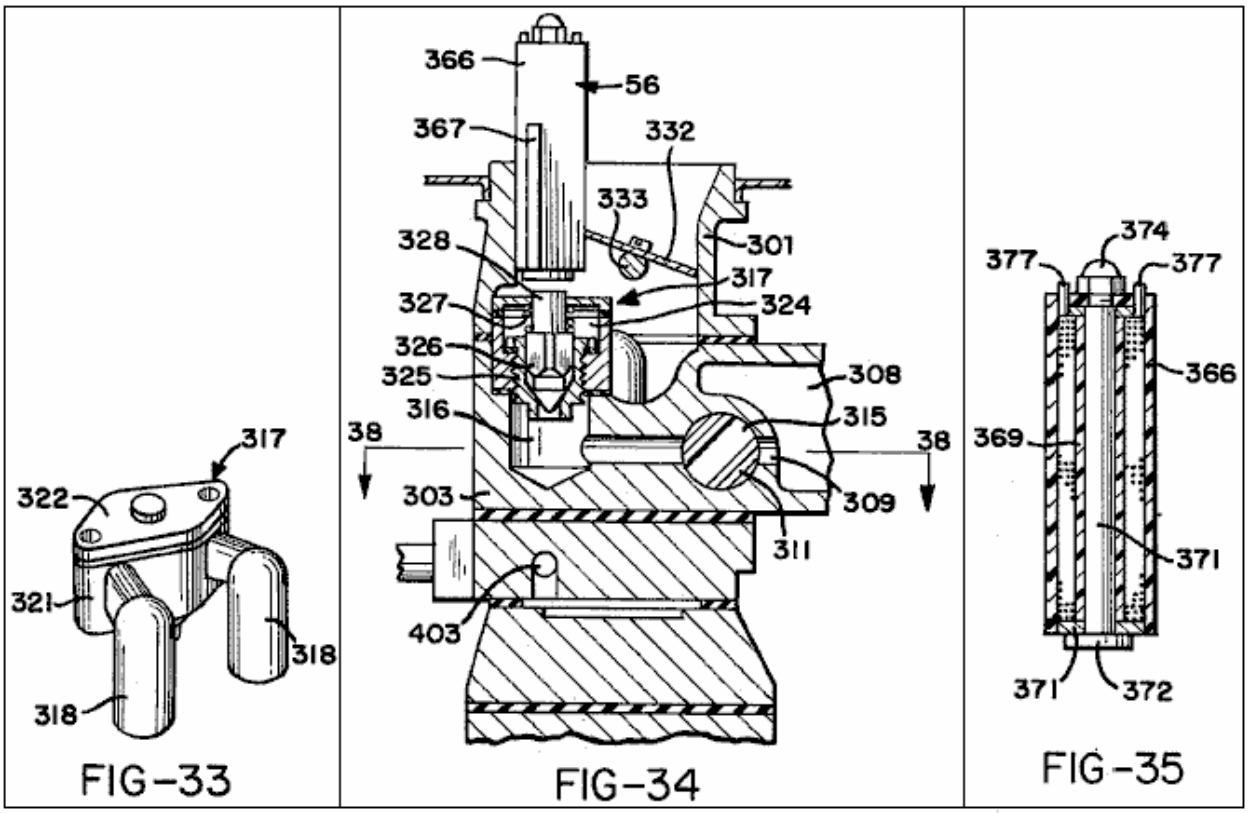

FIG-33 FIG-34 FIG-35

Fig.36 is a cross-section on the line 36--36 in Fig.32;

Fig.37 is a rear elevation of part of the gas mixing and delivery unit;

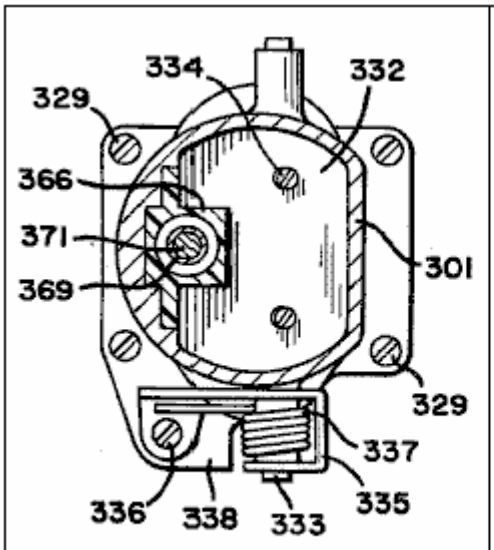

FIG-36

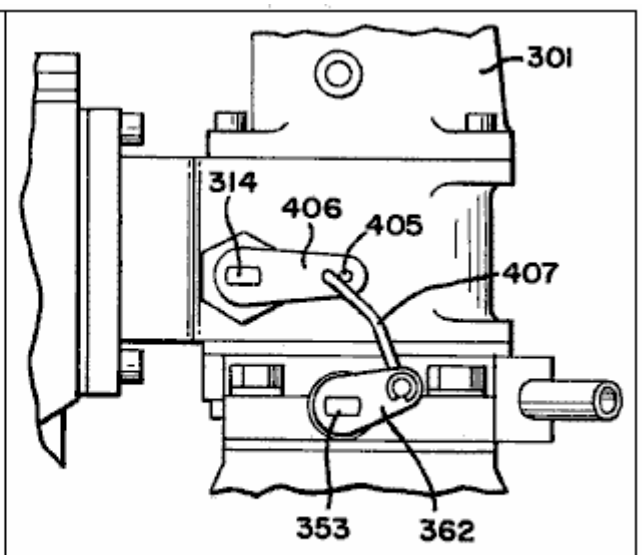

FIG-37

Fig.38 is a cross-section on the line 38--38 in Fig.34;

Fig.39 is a plan view of the lower section of the gas mixing and delivery unit, which is broken away from the upper section along the interface 39--39 of Fig.30;

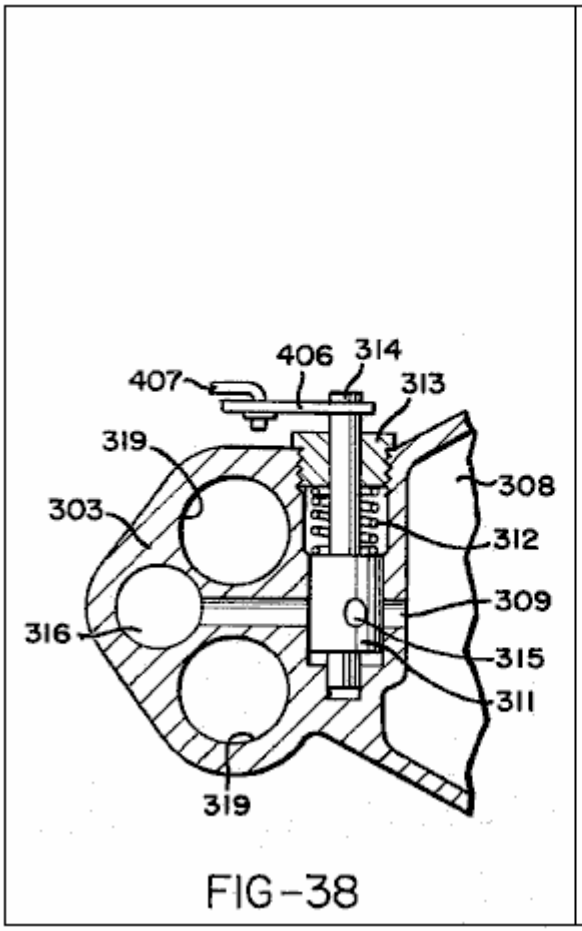

FIG-38

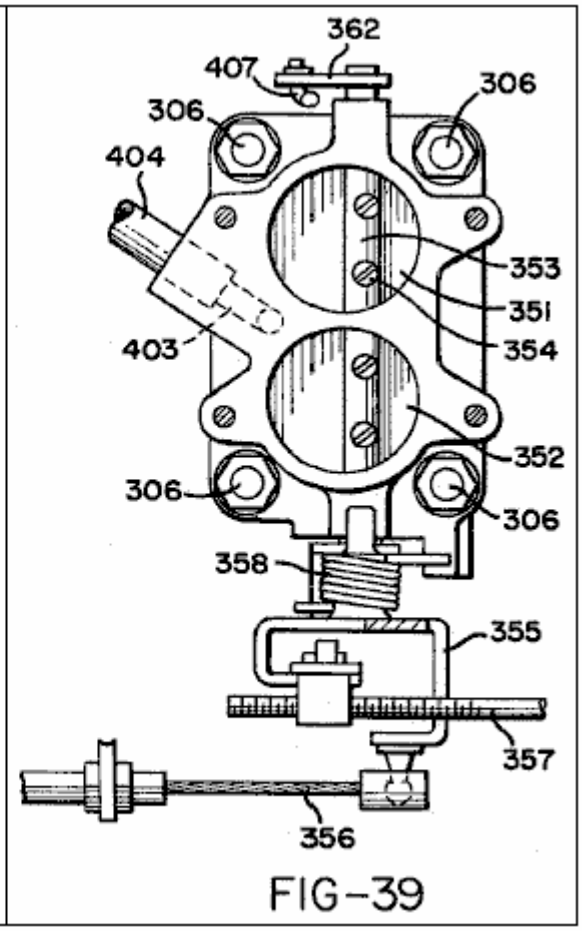

FIG-39

Fig.40 is a cross-section on the line 40--40 in Fig.32; and

Fig.41 is a plan of a lower body part of the gas mixing and delivery unit.

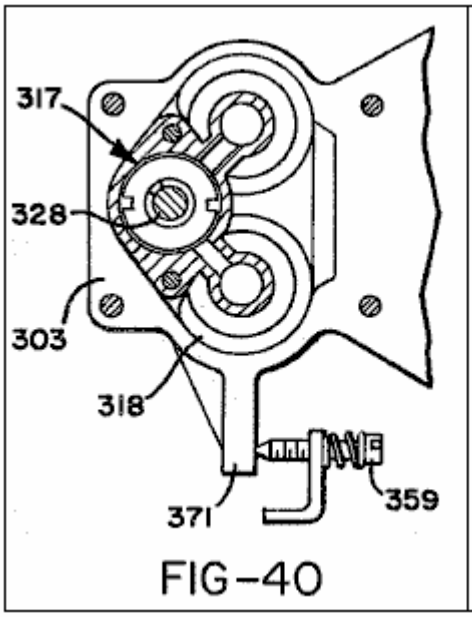

FIG-40

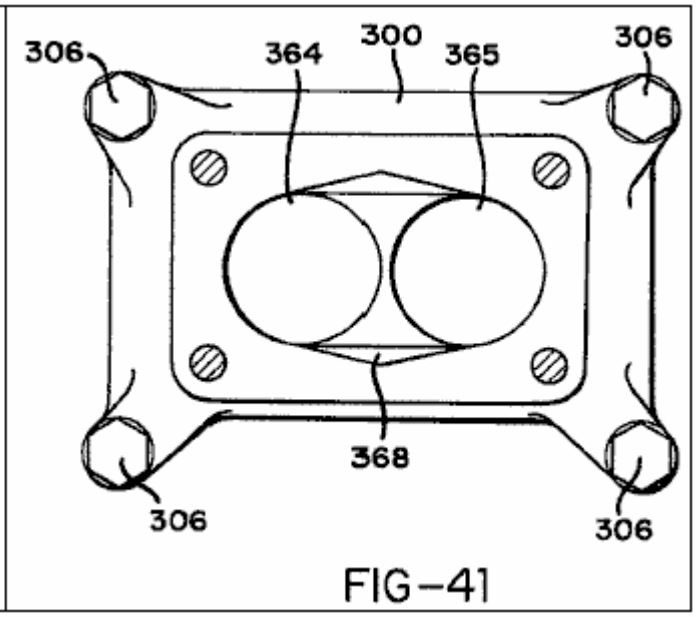

FIG-41

DESCRIPTION OF THE PREFERRED EMBODIMENT

Fig.1 shows an assembly denoted generally as **31** having an engine bay **32** in which an internal combustion engine **33** is mounted behind a radiator **34**. Engine **33** is a conventional engine and, as illustrated, it may have two banks of cylinders in "V" formation. Specifically, it may be a V8 engine. It is generally of conventional construction and **Fig.1** shows the usual cooling fan **34**, fan belt **36** and generator or alternator **37**.

In accordance with the invention the engine does not run on the usual petroleum fuel but is equipped with fuel supply apparatus which supplies it with a mixture of hydrogen and oxygen gases generated as products of a water electrolysis process carried out in the fuel supply apparatus. The major components of the fuel supply apparatus are an electrolytic cell denoted generally as **41** and a gas mixing and delivery unit **38** to mix the hydrogen and oxygen gases generated within the cell **41** and to deliver them to engine **33**. The electrolytic cell **41** receives water through a water delivery line **39** to make up the electrolyte solution within it. It has an anode and a cathode which contact the electrolyte solution, and in operation of the apparatus pulses of electrical energy are applied between the anode and cathode to produce pulses of high current flow through the electrolyte solution. Some of the electrical components necessary to produce the pulses of electrical energy applied between the anode and cathode are carried in a housing **40** mounted on one side of engine bay **32**. The car battery **30** is mounted at the other side of the engine bay.

Before the physical construction of the fuel delivery apparatus is described in detail the general principles of its operation will firstly be described with reference to the electrical circuit diagram of **Fig.2**.

In the illustrated circuit terminals **44, 45, 46** are all connected to the positive terminal of the car battery **30** and terminal **47** is connected to the negative terminal of that battery. Switch **48** is the usual ignition switch of the car and closure of this switch provides current to the coil **49** of a relay **51**. The moving contact **52** of relay **51** receives current at 12 volts from terminal **45**, and when the relay is operated by closure of ignition switch **48** current is supplied through this contact to line **53** so that line **53** may be considered as receiving a positive input and line **54** from terminal **47** may be considered as a common negative for the circuit. Closure of ignition switch **48** also supplies current to one side of the coil **55** of a solenoid **56**. The other side of solenoid coil **55** is earthed by a connection to the car body within the engine bay. As will be explained below solenoid **56** must be energised to open a valve which controls supply of hydrogen and oxygen gases to the engine and the valve closes to cut off that supply as soon as ignition switch **48** is opened.

The function of relay **51** is to connect circuit line **53** directly to the positive terminal of the car battery so that it receives a positive signal directly rather than through the ignition switch and wiring.

The circuit comprises pulse generator circuitry which includes unijunction transistor **Q1** with associated resistors **R1, R2 and R3** and capacitors **C2** and **C3**. This circuitry produces pulses which are used to trigger an NPN silicon power transistor **Q2** which in turn provides via a capacitor **C4** triggering pulses for a thyristor **T1**.

Resistor **R1** and capacitor **C2** are connected in series in a line **57** extending to one of the fixed contacts of a relay **58**. The coil **59** of relay **58** is connected between line **53** and a line **61** which extends from the moving contact of the relay to the common negative line **54** via a normally closed pressure operated switch **62**. The pressure control line **63** of switch **62** is connected in a manner to be described below to a gas collection chamber of electrolytic cell **41** in order to provide a control connection whereby switch **62** is opened when the gas in the collection chamber reaches a certain pressure. However, provided that switch **62** remains closed, relay **58** will operate when ignition switch **48** is closed to provide a connection between lines **57** and **61** thereby to connect capacitor **C2** to the common negative line **54**. The main purpose of relay **58** is to provide a slight delay in this connection between the capacitor **C2** and the common negative line **54** when the circuit is first energised. This will delay the generation of triggering pulses to thyristor **T1** until a required electrical condition has been achieved in the transformer circuitry to be described below. Relay **58** is hermetically sealed and has a balanced armature so that it can operate in any position and can withstand substantial shock or vibration when the car is in use.

When the connection between capacitor **C2** and line **54** is made via relay **58**, unijunction transistor **Q1** will act as an oscillator to provide positive output pulses in line **64** at a pulse rate which is controlled by the ratio of **R1:C1** and at a pulse strength determined by the ratio of **R2:R3**. These pulses will charge the capacitor **C3**. Electrolytic capacitor **C1** is connected directly between the common positive line **53** and the common negative line **54** to filter the circuitry from all static noise.

Resistor **R1** and capacitor **C2** are chosen such that at the input to transistor **Q1** the pulses will be of saw tooth form. This will control the form of the pulses generated in the subsequent circuitry and the saw tooth pulse form is chosen since it is believed that it produces the most satisfactory operation of the pulsing circuitry. It should be stressed, however, that other pulse forms, such as square wave pulses, could be used. Capacitor **C3** discharges

through a resistor **R4** to provide triggering signals for transistor **Q2**. Resistor **R4** is connected to the common negative line **54** to serve as a gate current limiting device for transistor **Q2**.

The triggering signals produced by transistor **Q2** via the network of capacitor **C3** and a resistor **R4** will be in the form of positive pulses of sharply spiked form. The collector of transistor **Q2** is connected to the positive supply line **53** through resistor **R6** while the emitter of that transistor is connected to the common negative line **54** through resistor **R5**. These resistors **R5** and **R6** control the strength of current pulses applied to a capacitor **C4**, which discharges through a resistor **R7** to the common negative line **54**, thereby to apply triggering signals to the gate of thyristor **T1**. The gate of thyristor **T1** receives a negative bias from the common negative line via resistor **R7** which thus serves to prevent triggering of the thyristor by inrush currents.

The triggering pulses applied to the gate of thyristor **T1** will be very sharp spikes occurring at the same frequency as the saw tooth wave form pulses established by unijunction transistor **Q1**. It is preferred that this frequency be of the order of 10,000 pulses per minute and details of specific circuit components which will achieve this result are listed below. Transistor **Q2** serves as an interface between unijunction transistor **Q1** and thyristor **T1**, preventing back flow of emf from the gate of the thyristor which might otherwise interfere with the operation of transistor **Q1**. Because of the high voltages being handled by the thyristor and the high back emf applied to transistor **Q2**, the latter transistor must be mounted on a heat sink.

The cathode of thyristor **T1** is connected via a line **65** to the common negative line **54** and the anode is connected via a line **66** to the centre of the secondary coil **67** of a first stage transformer **TR1**. The two ends of transformer coil **67** are connected via diodes **D1** and **D2** and a line **68** to the common negative line **54** to provide full wave rectification of the transformer output.

First stage transformer **T1** has three primary coils **71, 72, 73** wound together with secondary coil **67** about a core **74**. This transformer may be of conventional half cup construction with a ferrite core. The secondary coil may be wound on to a coil former disposed about the core and primary coils **71** and **73** may be wound in bifilar fashion over the secondary coil. The other primary coil **72** may then be wound over the coils **71, 73**. Primary coils **71** and **73** are connected at one side by a line **75** to the uniform positive potential of circuit line **53** and at their other sides by lines **79, 81** to the collectors of transistors **Q3**, **Q4**. The emitters of transistors **Q3, Q4** are connected permanently via a line **82** to the common negative line **54**. A capacitor **C6** is connected between lines **79, 81** to act as a filter preventing any potential difference between the collectors of transistors **Q3, Q4**.

The two ends of primary coil **72** are connected by lines **83, 84** to the bases of transistors **Q3, Q4**. This coil is centre tapped by a line **85** connected via resistor **R9** to the positive line **53** and via resistor **R10** to the common negative line **54**.

When power is first applied to the circuit transistors **Q3** and **Q4** will be in their non-conducting states and there will be no current in primary coils **71, 73**. However, the positive current in line **53** will provide via resistor **R9** a triggering signal applied to the centre tap of coil **72** and this signal operates to trigger alternate high frequency oscillation of transistors **Q3, Q4** which will result in rapid alternating pulses in primary coils **71, 73**. The triggering signal applied to the centre tap of coil **72** is controlled by the resistor network provided by resistors **R9** and **R10** such that its magnitude is not sufficient to enable it to trigger **Q3** and **Q4** simultaneously but is sufficient to trigger one of those transistors. Therefore only one of the transistors is fired by the initial triggering signal to cause a current to flow through the respective primary coil **71** or **73**. The signal required to hold the transistor in the conducting state is much less than that required to trigger it initially, so that when the transistor becomes conductive some of the signal applied to the centre tap of coil **72** will be diverted to the non-conducting transistor to trigger it. When the second transistor is thus fired to become conductive, current will flow through the other of the primary coils **71, 73**, and since the emitters of the two transistors are directly connected together, the positive output of the second transistor will cause the first-fired transistor to be shut off. When the current drawn by the collector of the second-fired resistor drops, part of the signal on the centre tap of coil **72** is diverted back to the collector of the first transistor which is re-fired. It will be seen that the cycle will then repeat indefinitely so that transistors **Q3, Q4** are alternately fired and shut off in very rapid sequence. Thus current pulses flow in alternate sequence through primary coils **71, 73** at a very high frequency, this frequency being constant and independent of changes in input voltage to the circuit. The rapidly alternating pulses in primary coils **71** and **73**, which will continue for so long as ignition switch **48** remains closed, will generate higher voltage signals at the same frequency in the transformer secondary coil **67**.

A dump capacitor **C5** bridged by a resistor **R8** is connected by a line **86** to the line **66** from the secondary coil of transformer **TR1** and provides the output from that transformer which is fed via line **87** to a second stage transformer **TR2**.

When thyristor **T1** is triggered to become conductive the full charge of dump capacitor **C5** is released to second stage transformer **TR2**. At the same time the first stage of transformer **TR1** ceases to function because of this

momentary short circuit placed across it and consequently thyristor **T1** releases, i.e. becomes non-conductive. This permits charge to be built up again in dump capacitor **C5** for release when the thyristor is next triggered by a signal from transistor **Q2**. Thus during each of the intervals when the thyristor is in its non-conducting state the rapidly alternating pulses in primary coils **71, 73** of transformer **TR1** produced by the continuously oscillating transistors **Q3, Q4** produce, via the transformer coupling, relatively high voltage output pulses which build up a high charge in capacitor **C5**, and this charge is released suddenly when the thyristor is triggered. In a typical apparatus using a 12 volt DC supply battery pulses of the order of 22 amps at 300 volts may be produced in line **87**.

As previously mentioned relay **58** is provided in the circuit to provide a delay in the connection of capacitor **C2** to the common negative line **54**. This delay, although very short, is sufficient to enable transistors **Q3**, **Q4** to start oscillating to cause transformer **TR1** to build up a charge in dumping capacitor **C5** before the first triggering signal is applied to thyristor **T1** to cause discharge of the capacitor.

Transformer **TR2** is a step-down transformer which produces pulses of very high current flow at low voltage. It is built into the anode of electrolytic cell **41** and comprises a primary coil **88** and a secondary coil **89** wound about a core **91**. Secondary coil **89** is formed of heavy wire in order to handle the large current induced in it and its ends are connected directly to the anode **42** and cathode **43** of the electrolytic cell **41** in a manner to be described below.

In a typical apparatus, the output from the first stage transformer **TR1** would be 300 volt pulses of the order of 22 amps at 10,000 pulses per minute and a duty cycle of slightly less than 0.006. This can be achieved from a uniform 12 volt and 40 amps DC supply using the following circuit components:

Components:
R1 2.7 k ohms 1/2 watt 2% resistor
R2 220 ohms 1/2 watt 2% resistor
R3 100 ohms 1/2 watt 2% resistor
R4 22 k ohms 1/2 watt 2% resistor
R5 100 ohms 1/2 watt 2% resistor
R6 220 ohms 1/2 watt 2% resistor
R7 1 k ohms 1/2 watt 2% resistor
R8 10 m ohms 1 watt 5% resistor
R9 100 ohms 5 watt 10% resistor
R10 5.6 ohms 1 watt 5% resistor

C1 2200 mF 16v electrolytic capacitor
C2 2.2 mF 100v 10% capacitor
C3 2.2 mF 100v 10% capacitor
C4 1 mF 100v 10% capacitor
C5 1 mF 1000v ducon paper capacitor 5S10A
C6 0.002 mF 160v capacitor

Q1 2n 2647 PN unijunction transistor
Q2 2N 3055 NPN silicon power transistor
Q3 2n 3055 NPN silicon power transistor
Q4 2n 3055 NPN silicon power transistor
T1 btw 30-800 rm fast turn-off thyristor
D1 a 14 p diode
D2 a 14 p diode

L1 indicator lamp
Sv1 continuously rated solenoid
Rl1 pw5ls hermetically sealed relay
Ps1 p658a-10051 pressure operated micro switch

Tr1 half cup transformer cores 36/22-341
Coil former 4322-021-30390 wound to provide a turns ratio between secondary and primary of 18:1
Secondary coil 67 = 380 turns
Primary coil 71 = 9 turns
Primary coil 73 = 9 turns
Primary coil 72 = 4 turns

The installation of the above circuit components is illustrated in **Fig.3** to **Fig.13**. They are mounted within and on a housing which is denoted generally as **101** and which is fastened to a side wall of the car engine bay **32** via a mounting bracket **102**. Housing **101**, which may be formed as an aluminium casting, has a front wall **103**, top and bottom walls **104**, **105** and side walls **106**, **107**. All of these walls have external cooling fins. The back of housing **101** is closed by a printed circuit board **108** which is held clamped in position by a peripheral frame **109** formed of an insulated plastics material clamped between the circuit board and mounting bracket **102**. An insulating sheet **111** of cork is held between the frame **109** and mounting bracket **102**.

Printed circuit board **108** carries all of the above-listed circuit components except for capacitor **C5** and transistors **Q3** and **Q4**. **Fig.5** illustrates the position in which transistor **Q2** and the coil assembly **112** of transformer **TR1** are mounted on the printed circuit board. Transistor **Q2** must withstand considerable heat generation and it is therefore mounted on a specially designed heat sink **113** clamped to circuit board **108** by clamping screws **114** and nuts **115**. As most clearly illustrated in **Fig.7** and **Fig.8**, heat sink **113** has a flat base plate portion **116** which is generally diamond shaped and a series of rod like cooling fins **117** project to one side of the base plate around its periphery. It has a pair of countersunk holes **118** of the clamping screws and a similar pair of holes **119** to receive the connector pins **121** which connect transistor **Q2** to the printed circuit board. Holes **118, 119** are lined with nylon bushes **122** and a Formica sheet **123** is fitted between the transistor and the heat sink so that the sink is electrically insulated from the transistor.

The coil assembly **112** of transformer **TR1** (See Fig.9) is comprised of a casing **124** which contains transformer coils and the associated core and former and is closed by a plastic closing plate **125**. Plate **125** is held in position by a clamping stud **126** and is fitted with electrical connector pins **127** which are simply pushed through holes in circuit board **108** and are soldered to appropriate copper conductor strips **128** on the outer face of the board.

For clarity the other circuit components mounted on printed circuit board **108** are not illustrated in the drawings. These are standard small size components and the manner in which they may be fitted to the circuit board is entirely conventional.

Capacitor **C5** is mounted within casing **101**. More specifically it is clamped in position between a flange **131** which stands up from the floor **105** of the casing and a clamping pad **132** engaged by a clamping screw **133**, which is mounted in a threaded hole in casing side wall **106** and is set in position by a lock screw **134**. Flange **131** has two holes **135** (See Fig.6) in which the terminal bosses **136** of capacitor **C5** are located. The terminal pins **137** projecting from bosses **136** are connected to the terminal board **108** by wires (not shown) and appropriate connector pins which are extended through holes in the circuit board and soldered to the appropriate conductor strips on the other face of that board.

Transistors **Q3** and **Q4** are mounted on the front wall **103** of casing **101** so that the finned casing serves as an extended heat sink for these two transistors. They are mounted on the casing wall and electrically connected to the printed circuit board in identical fashion and this is illustrated by **Fig.10** which shows the mounting of transistor **Q3**. As shown in that figure the transistor is clamped in position by clamping screws **138** and nuts **139** which also serve to provide electrical connections to the appropriate conductors of the printed circuit board via conductor wires **141**. The third connection from the emitter of the transistor to the common negative conductor of the printed circuit is made by conductor **142**. Screws **130** and conductor **142** extend through three holes in the casing front wall **103** and these holes are lined with electrically insulating nylon bushes **143, 144**. A Formica sheet **145** is sandwiched between casing plate **103** and the transistor which is therefore electrically insulated from the casing. Two washers **146** are placed beneath the ends of conductor wires **141**.

Pressure operated microswitch **52** is mounted on a bracket **147** projecting inwardly from front wall **103** of casing **101** adjacent the top wall **104** of the casing and the pressure sensing unit **148** for this switch is installed in an opening **149** through top wall **104**. As most clearly seen in **Fig.11**, pressure sensing unit **148** is comprised of two generally cylindrical body members **150, 151** between which a flexible diaphragm **152** is clamped to provide a diaphragm chamber **153**. The gas pressure of sensing tube **63** is applied to chamber **153** via a small diameter passage **154** in body member **150** and a larger passage **155** in a cap member **156**. The cap member and body members are fastened together and clamped to the casing top plate **104** by means of clamping screws **157**. Sensing tube **63** is connected to the passage **155** in cap member **156** by a tapered thread connector **158** and the interface between cap member **156** and body member **150** is sealed by an O-ring **159**.

The lower end of body member **151** of pressure sensing unit **148** has an internally screw threaded opening which receives a screw **161** which at its lower end is formed as an externally toothed adjusting wheel **162**. A switch actuating plunger **163** extends through a central bore in adjusting wheel **162** so that it engages at one end flexible diaphragm **152** and at the other end the actuator member **164** of microswitch **62**. The end of plunger **163** which engages the diaphragm has a flange **165** to serve as a pressure pad and a helical compression spring **167** encircles plunger **163** to act between flange **165** and the adjusting wheel **162** to bias the plunger upwardly against the action of the gas pressure acting on diaphragm **152** in chamber **153**. The pressure at which diaphragm **152**

will force plunger **163** down against the action of spring **167** to cause actuation of switch **62** may be varied by rotating screw **161** and the setting of this screw may be held by a setting screw **168** mounted in a threaded hole in the upper part of casing front wall **103** and projecting inwardly to fit between successive teeth of adjusting wheel **162**. After correct setting of screw **161** is achieved set screw **168** will be locked in position by locking screw **169** which is then sealed by a permanent seal **170** to prevent tampering. Microswitch **62** is also electrically connected to the appropriate conductors of the printed circuit board via wires within the housing and connector pins.

Electrical connections are made between the conductors of printed circuit board **108** and the internal wiring of the circuit via a terminal block **150** (**Fig.12**) set in an opening of housing floor **105** by screws **160** and fitted with terminal plates **140**.

The physical construction of electrolytic cell **41** and the second stage transformer **TR2** is illustrated in **Fig.13** to **Fig.29**. The cell comprises an outer casing **171** having a tubular peripheral wall **172** and top and bottom closures **173, 174**. Bottom closure **174** is comprised of a domed cover **175** and an electrically insulated disc **176** which are held to the bottom of peripheral wall **172** by circumferentially spaced clamping studs **177**. Top closure **173** is comprised of a pair of top plates **178, 179** disposed face to face and held by circumferentially spaced clamping studs **181** screwed into tapped holes in the upper end of peripheral wall **172**. The peripheral wall of the casing is provided with cooling fins **180**.

The anode **42** of the cell is of generally tubular formation. It is disposed vertically within the outer casing and is clamped between upper and lower insulators **182, 183**. Upper insulator **182** has a central boss portion **184** and an annular peripheral flange **185** portion the outer rim of which is clamped between upper closure plate **179** and the upper end of peripheral wall **172**. Lower insulator **183** has a central boss portion **186**, an annular flange portion **187** surrounding the boss portion and an outer tubular portion **188** standing up from the outer margin of flange portion **187**. Insulators **182, 183** are moulded from an electrically insulating material which is also alkali resistant. Polytetrafluoroethylene is one suitable material.

When held together by the upper and lower closures, insulators **182, 183** form an enclosure within which anode **42** and the second stage transformer **TR2** are disposed. Anode **42** is of generally tubular formation and it is simply clamped between insulators **182, 183** with its cylindrical inner periphery located on the boss portions **184, 186** of those insulators. It forms a transformer chamber which is closed by the boss portions of the two insulators and which is filled with a suitable transformer oil. O-ring seals **190** are fitted between the central bosses of the insulator plates and the anode to prevent loss of oil from the transformer chamber.

The transformer core **91** is formed as a laminated mild steel bar of square section. It extends vertically between the insulator boss portions **184, 186** and its ends are located within recesses in those boss portions. The primary transformer winding **88** is wound on a first tubular former **401** fitted directly onto core **91** whereas the secondary winding **89** is wound on a second tubular former **402** so as to be spaced outwardly from the primary winding within the oil filled transformer chamber.

The cathode **43** in the form of a longitudinally slotted tube which is embedded in the peripheral wall portion **183**, this being achieved by moulding the insulator around the cathode. The cathode has eight equally spaced longitudinal slots **191** so that it is essentially comprised of eight cathode strips **192** disposed between the slots and connected together at top and bottom only, the slots being filled with the insulating material of insulator **183**.

Both the anode and cathode are made of nickel plated mild steel. The outer periphery of the anode is machined to form eight circumferentially spaced flutes **193** which have arcuate roots meeting at sharp crests or ridges **194** defined between the flutes. The eight anode crests **194** are radially aligned centrally of the cathode strips **192** and the perimeter of the anode measured along its external surface is equal to the combined widths of the cathode strips measured at the internal surfaces of these strips, so that over the major part of their lengths the anode and cathode have equal effective areas. This equalisation of areas generally have not been available in prior art cylindrical anode/cathode arrangements.

As most clearly seen in **Fig.27** the upper end of anode **42** is relieved and fitted with an annular collar **200** the outer periphery of which is shaped to form an extension of the outer peripheral surface of the fluted anode. This collar is formed of an electrically insulated plastics material such as polyvinyl chloride or teflon. A locating pin **205** extends through collar **200** to project upwardly into an opening in upper insulating plate **182** and to extend down into a hole **210** in the cathode. The collar is thus located in correct annular alignment relative to the anode and the anode is correctly aligned relative to the cathode.

The annular space **195** between the anode and cathode serves as the electrolyte solution chamber. Initially this chamber is filled approximately 75% full with an electrolyte solution of 25% potassium hydroxide in distilled water. As the electrolysis reaction progresses hydrogen and oxygen gases collect in the upper part of this chamber and water is admitted to maintain the level of electrolyte solution in the chamber. Insulating collar **200** shields the

cathode in the upper region of the chamber where hydrogen and oxygen gases collect to prevent any possibility of arcing through these gases between the anode and cathode.

Electrolyte chamber **195** is divided by a tubular membrane **196** formed by nylon woven mesh material **408** stretched over a tubular former **197** formed of very thin sheet steel. As most clearly illustrated in **Fig.20** and **Fig.21** former **197** has upper and lower rim portions **198, 199** connected by circumferentially spaced strip portions **201**. The nylon mesh material **408** may be simply folded around the upper and lower insulators **182, 183** so that the former is electrically isolated from all other components of the cell. Material **408** has a mesh size which is so small that the mesh openings will not pass bubbles of greater than 0.004 inch diameter and the material can therefore serve as a barrier against mixing of hydrogen and oxygen generated at the cathode and anode respectively while permitting the electrolytic flow of current between the electrodes. The upper rim portion **198** of the membrane former **197** is deep enough to constitute a solid barrier through the depth of the gas collection chamber above the electrolyte solution level so that there will be no mixing of hydrogen and oxygen within the upper part of the chamber.

Fresh water is admitted into the outer section of chamber **195** via an inlet nozzle **211** formed in upper closure plate **178**. The electrolyte solution passes from the outer to the inner sections of chamber **195** through the mesh membrane **408**.

Nozzle **211** has a flow passage **212** extending to an electrolyte inlet valve **213** controlled by a float **214** in chamber **195**. Valve **213** comprises a bushing **215** mounted within an opening extending down through upper closure plate **179** and the peripheral flange **185** of upper insulator **182** and providing a valve seat which co-operates with valve needle **216**. Needle **216** rests on a pad **217** on the upper end of float **214** so that when the electrolyte solution is at the required level the float lifts the needle hard against the valve seat. The float slides vertically on a pair of square section slide rods **218** extending between the upper and lower insulators **182** and **183**. These rods, which may be formed of polytetrafluoroethylene extend through appropriate holes **107** through the float.

The depth of float **214** is chosen such that the electrolyte solution fills only approximately 75% of the chamber **195**, leaving the upper part of the chamber as a gas space which can accommodate expansion of the generated gas due to heating within the cell.

As electrolysis of the electrolyte solution within chamber **195** proceeds, hydrogen gas is produced at the cathode and oxygen gas is produced at the anode. These gases bubble upwardly into the upper part of chamber **195** where they remain separated in the inner and outer compartments defined by membrane and it should be noted that the electrolyte solution enters that part of the chamber which is filled with oxygen rather than hydrogen so there is no chance of leakage of hydrogen back through the electrolyte inlet nozzle.

The abutting faces of upper closure plates **178, 179** have matching annular grooves forming within the upper closure inner and outer gas collection passages **221, 222**. Outer passage **222** is circular and it communicates with the hydrogen compartment of chamber **195** via eight ports **223** extending down through top closure plate **179** and the peripheral flange of upper insulator **182** adjacent the cathode strips **192**. Hydrogen gas flows upwardly through ports **223** into passage **222** and thence upwardly through a one-way valve **224** (**Fig.19**) into a reservoir **225** provided by a plastic housing **226** bolted to top closure plate **178** via a centre stud **229** and sealed by a gasket **227**. The lower part of housing **114** is charged with water. Stud **229** is hollow and its lower end has a transverse port **228** so that, on removal of a sealing cap **229** from its upper end it can be used as a filter down which to pour water into the reservoir **225**. Cap **229** fits over a nut **231** which provides the clamping action on plastic housing **226** and resilient gaskets **232, 233** and **234** are fitted between the nut and cover, between the cap and the nut and between the cap and the upper end of stud **229**.

One-way valve **224** comprises a bushing **236** which projects down into the annular hydrogen passage **221** and has a valve head member **237** screw fitted to its upper end to provide clamping action on top closure plate **178** between the head member and a flange **238** at the bottom end bushing **236**. Bushing **236** has a central bore **239**, the upper end of which receives the diamond cross-section stem of a valve member **240**, which also comprises a valve plate portion **242** biased against the upper end of the bushing by compression spring **243**. Valve member **240** is lifted against the action of spring **243** by the pressure of hydrogen gas within passage **221** to allow the gas to pass into the interior of valve head **237** and then out through ports **220** in that member into reservoir **225**.

Hydrogen is withdrawn from reservoir **225** via a stainless steel crooked tube **241** which connects with a passage **409**. Passage **409** extends to a port **250** which extends down through the top and bottom closure plates **178, 179** and top insulator **182** into a hydrogen duct **244** extending vertically within the casting of casing **171**. Duct **244** is of triangular cross-section. As will be explained below, the hydrogen passes from this duct into a mixing chamber defined in the gas mixing and delivery unit **38** which is bolted to casing **171**.

Oxygen is withdrawn from chamber **195** via the inner annular passage **221** in the top closure. Passage **221** is not circular but has a scalloped configuration to extend around the water inlet. Oxygen enters it through eight ports **245** extended through top closure plate **179** and the annular flange portion of upper insulator **182**. The oxygen flows upwardly from passage **222** through a one-way valve **246** and into a reservoir **260** provided by a plastic housing **247**. The arrangement is similar to that for withdrawal of hydrogen and will not be described in great detail. Suffice to say that the bottom of the chamber is charged with water and the oxygen is withdrawn through a crooked tube **248**, an outlet passage **249** in top closure plate **178**, and a port which extends down through closure plates **178, 179** and top insulator **182** into a triangular cross-section oxygen duct **251** extending vertically within casing **171** disposed opposite hydrogen duct **244**. The oxygen is also delivered to the gas mixing chamber of the mixing and delivery unit **38**.

The pressure sensing tube **63** for switch **62** is connected via a tapered thread connector **410** and a passage **411** in the top closure plate **178** directly to the annular hydrogen passage **222**. If the pressure within the passage rises above a predetermined level, switch **62** is operated to disconnect capacitor **C2** from the common negative line **54**. This removes the negative signal from capacitor **C2** which is necessary to maintain continuous operation of the pulse generating circuitry for generating the triggering pulses on thyristor **T1** and these triggering pulses therefore cease. The transformer **TR1** continues to remain in operation to charge dumping capacitor **C5** but because thyristor **T1** cannot be triggered dumping capacitor **C5** will simply remain charged until the hydrogen pressure in passage **222**, and therefore in chamber **195** falls below the predetermined level and triggering pulses are applied once more to thyristor **T1**. Pressure actuated switch **62** thus controls the rate of gas production according to the rate at which it is withdrawn. The stiffness of the control springs for gas escape valves **224, 246** must of course be chosen to allow escape of the hydrogen and oxygen in the proportions in which they are produced by electrolysis, i.e. in the ratios 2:1 by volume.

Reservoirs **225, 260** are provided as a safety precaution. If a sudden back-pressure were developed in the delivery pipes this could only shatter the plastic housings **226, 247** and could not be transmitted back into the electrolytic cell. Switch **62** would then operate to stop further generation of gases within the cell.

The electrical connections of secondary transformer coil **89** to the anode and the cathode are shown in **Fig.14**. One end of coil **89** is extended as a wire **252** which extends into a blind hole in the inner face of the anode where it is gripped by a grub screw **253** screwed into a threaded hole extended vertically into the anode underneath collar **200**. A tapered nylon plug **254** is fitted above screw **253** to seal against loss of oil from the interior of the anode. The other end of coil **89** is extended as a wire **255** to pass down through a brass bush **256** in the bottom insulator **183** and then horizontally to leave casing **171** between bottom insulating disc **176** and insulator **183**.

As most clearly shown in **Fig.23**, brass bush **256** has a head flange **257** and is fitted at its lower end with a nut **258** whereby it is firmly clamped in position. Gaskets **259, 261** are disposed beneath head flange **257** and above nut **258** respectively.

At the location where wire **255** is extended horizontally to leave the casing the upper face of disc **176** and the lower face of insulator **183** are grooved to receive and clamp onto the wire. Disc **176** and insulator **183** are also extended radially outwardly at this location to form tabs which extend out beneath casing **171** and ensure proper insulation of the wire through to the outer periphery of the casing.

Outside the casing, wire **255** is connected to a cathode terminal bolt **262**. Terminal bolt **262** has a head which is received in a socket in separate head piece **263** shaped to suit the cylindrically curved inner periphery of the cathode and nickel plated to resist chemical attack by the electrolyte solution. The stem of the terminal bolt extends through openings in the cathode and peripheral wall portion **188** of insulator **183** and air insulating bush fitted in an aligned opening in the casing wall **172**. The head piece **263** of the terminal bolt is drawn against the inner periphery of the cathode by tightening of a clamping nut **265** and the end of wire **255** has an eye which is clamped between nut **265** and a washer **266** by tightening a terminal end nut **267**. A washer **268** is provided between nut **265** and brush **264** and a sealing O-ring **269** is fitted in an annular groove in the bolt stem to engage the inner periphery of the bush in order to prevent escape of electrolyte solution. The terminal connection is covered by a cover plate **271** held in place by fixing screws **272**.

The two ends of the primary transformer coil **88** are connected to strip conductors **273, 274** which extend upwardly through the central portion of upper insulator **183**. The upper ends of conductors **273, 274** project upwardly as pins within a socket **275** formed in the top of upper insulator **183**. The top of socket **275** is closed by a cover **276** which is held by a centre stud **277** and through which wires **278, 279** from the external circuit are extended and connected to conductors **273, 274** by push-on connectors **281, 282**.

The transformer connections shown in **Fig.14** are in accordance with the circuit of **Fig.2**, i.e. the ends of secondary coil **89** are connected directly between the anode and the cathode. Transformer **TR2** is a step-down

transformer and, assuming an input of pulses of 22 amps at 300 volts and a coil ratio between the primary and secondary of 10:1 the output applied between the anode and the cathode will be pulses of 200 amps at a low voltage of the order of 3 volts. The voltage is well in excess of that required for electrolysis to proceed and the very high current achieved produces a high rate of yield of hydrogen and oxygen. The rapid discharge of energy which produces the large current flow will be accompanied by a release of heat. This energy is not entirely lost in that the consequent heating of the electrolyte solution increases the mobility of the ions which tends to increase the rate of electrolysis.

The configuration of the anode and cathode arrangement of electrolytic cell **41** is of significant importance. The fluted external periphery of the anode causes a concentration of current flow which produces a better gas yield over a given electrode area. This particular configuration also causes the surface area of the anode to be extended and permits an arrangement in which the anode and cathode have equal surface areas which is most desirable in order to minimise electrical losses. It is also desirable that the anode and cathode surfaces at which gas is produced be roughened, for example by sand-blasting. This promotes separation of the gas bubbles from the electrode surfaces and avoids the possibility of overvoltages.

The arrangement of the secondary transformer in which the central anode is surrounded by the cathode is also of great importance. The anode, being constructed of a magnetic material, is acted on by the magnetic field of transformer **TR2** to become, during the period of energisation of that transformer, a strong conductor of magnetic flux. This in turn creates a strong magnetic field in the inter-electrode space between the anode and the cathode. It is believed that this magnetic field increases the mobility of the ions in solution thereby improving the efficiency of the cell.

The heat generated by transformer **TR2** is conducted via the anode to the electrolyte solution and increases the mobility of the ions within the electrolyte solution as above mentioned. The cooling fins **180** are provided on casing **171** to assist in dissipation of excess generated heat. The location of the transformer within the anode also enables the connections of the secondary coil **89** to the anode and cathode to be made of short, well protected conductors.

As mentioned above the hydrogen and oxygen gas generated in electrolytic cell **41** and collected in ducts **244, 251** is delivered to a gas mixing chamber of the mixing and delivery unit **38**. More specifically, these gases are delivered from ducts **244, 251** via escape valves **283, 284** (**Fig.15**) which are held in position over discharge ports **285, 286** from the ducts by means of a leaf spring **287**. The outer ends of spring **287** engage the valves **283, 284** and the centre part of the spring is bowed inwardly by a clamping stud **288** screwed into a tapped hole in a boss **289** formed in the cell casing **171**.

Valve **283** is detailed in **Fig.28** and **Fig.29** and valve **284** is of identical construction. Valve **283** includes an inner valve body **291** having a cap portion **292** and an annular end ring portion **293** which holds an annular valve seat **294**. A valve disc **295** is biased against the valve seat by a valve spring **296** reacting against the cap portion **292**. An outer valve cover **297** fits around the inner member **291** and is engaged by spring **287** to force the inner member firmly into a socket in the wall of the cell casing so to cover the hydrogen discharge port **285**. The end ring portion **293** of the inner body member beds on a gasket **298** within the socket.

During normal operation of the apparatus valves **283, 284** act as simple one-way valves by movements of their spring loaded valve plates. However, if an excessive gas pressure should arise within the electrolytic cell these valves will be forced back against the action of holding spring **287** to provide pressure relief. The escaping excess gas then flows to atmosphere via the mixing and delivery unit **38** as described below. The pressure at which valves **283, 284** will lift away to provide pressure relief may be adjusted by appropriate setting of stud **288**, which setting is held by a nut **299**.

The construction of the gas mixing and delivery unit **38** is shown in **Fig.30** and **Fig.40**. It comprises an upper body portion **301** which carries an air filter assembly **302**, an intermediate body portion **303**, which is bolted to the casing of electrolytic cell **41** by six studs **304**, and successive lower body portions **305, 300**, the latter of which is bolted to the inlet manifold of the engine by four studs **306**.

The bolted connection between intermediate body portion **303** and the casing of the electrolytic cell is sealed by a gasket **307**. This connection surrounds valves **283, 284** which deliver hydrogen and oxygen gases directly into a mixing chamber **308** (**Fig.34**) defined by body portion **303**. The gases are allowed to mix together within this chamber and the resulting hydrogen and oxygen mixture passes along small diameter horizontal passageway **309** within body portion **303** which passageway is traversed by a rotary valve member **311**. Valve member **311** is conically tapered and is held within a correspondingly tapered valve housing by a spring **312** (**Fig.38**) reacting against a bush **313** which is screwed into body portion **303** and serves as a mounting for the rotary valve stem **314**. Valve member **311** has a diametral valve port **315** and can be rotated to vary the extent to which this port is

aligned with passageway **309** thereby to vary the effective cross-section for flow through that passageway. As will be explained below, the rotational positions of the valve member is controlled in relation to the engine speed.

Passage **309** extends to the lower end of a larger diameter vertical passageway **316** which extends upwardly to a solenoid freed valve **310** incorporated in a valve and jet assembly denoted generally as **317**.

Assembly **317** comprises a main body **321** (**Fig.32**) closed at the top by a cap **322** when the assembly is clamped to body portion **303** by two clamping studs **323** to form a gas chamber **324** from which gas is to be drawn through jet nozzles **318** into two vertical bores or throats **319** (**Fig.31**) in body portion **303**. The underside of body **321** has a tapped opening into which is fitted an externally screw threaded valve seat **325** of valve **310**. A valve member **326** is biased down against seat **325** by a spring **327** which reacts against cap **322**. Spring **327** encircles a cylindrical stem **328** of valve member **326** which stem projects upwardly through an opening in cap **322** so that it may be acted on by solenoid **56** which is mounted immediately above the valve in upper body portion **301**.

Solenoid **56** is comprised of an outer insulating casing **366** which has two mounting flanges **367**. This casing houses the copper windings constituting coil **55**. These are wound on a plastic bobbin **369** disposed about a central mild steel core **371**. The core has a bottom flange **372** and the bobbin and coils are held clamped in the casing through insulating closure **373** acted on by flange **372** on tightening of a clamping nut **374** which is fitted to the other end of the core.

Upper body portion **301** of unit **38** is tubular but at one side it has an internal face shaped to suit the exterior profile of solenoid casing **366** and mounting flanges **367**. Two mounting screws **375** screw into holes in this face and engage slots **376** in the mounting flanges **367** so that the height of the solenoid above valve **310** can be adjusted. The two terminals **377** are connected into the electrical circuit by wires (not shown) which may be extended into unit **38** via the air filter assembly.

When solenoid **56** is energised its magnetised core attracts valve stem **328** and valve member **326** is lifted until stem **328** abuts the lower flange **372** of the solenoid core. Thus valve **310** is opened when the ignition switch is closed and will close under the influence of spring **327** when the ignition switch is opened. Vertical adjustment of the solenoid position controls the lift of valve member **326** and therefore the maximum fuel flow rate through unit **38**.

Electrolyte cell **41** produces hydrogen in the ratio 2:1 to provide a mixture which is by itself completely combustible. However, as used in connection with existing internal combustion engines the volume of hydrogen and oxygen required for normal operation is less than that of a normal fuel air mixture. Thus a direct application to such an engine of only hydrogen and oxygen in the amount required to meet power demands will result in a vacuum condition within the system. In order to overcome this vacuum condition provision is made to draw make-up air into throats **319** via the air filter assembly **302** and upper body portion **301**.

Upper body portion **301** has a single interior passage **328** through which make-up air is delivered to the dual throats **319**. It is fastened to body portion **303** by clamping studs **329** and a gasket **331** is sandwiched between the two body portions. The amount of make-up air admitted is controlled by an air valve flap **332** disposed across passage **328** and rotatably mounted on a shaft **333** to which it is attached by screws **334**. The valve flap is notched to fit around solenoid casing **366**. Shaft **333** extends through the wall of body portion **301** and outside that wall it is fitted with a bracket **335** which carries an adjustable setting screw **336** and a biasing spring **337**. Spring **337** provides a rotational bias on shaft **333** and during normal running of the engine it simply holds flap **332** in a position determined by engagement of setting screw **336** with a flange **338** of body portion **301**. This position is one in which the flap almost completely closes passage **328** to allow only a small amount of make-up air to enter, this small amount being adjustable by appropriate setting of screw **336**. Screw **336** is fitted with a spring **339** so that it will hold its setting.

Although flaps **332** normally serve only to adjust the amount of make-up air admitted to unit **38**, it also serves as a pressure relief valve if excessive pressures are built up, either due to excessive generation of hydrogen and oxygen gases or due to burning of gases in the inlet manifold of the engine. In either event the gas pressure applied to flaps **332** will cause it to rotate so as to open passage **328** and allow gases to escape back through the air filter. It will be seen in **Fig.32** that flap mounting shaft **333** is offset from the centre of passage **328** such that internal pressure will tend to open the flap and thus exactly the reverse of the air valve in a conventional gasoline carburettor.

Air filter assembly **302** comprises an annular bottom pan **341** which fits snugly onto the top of upper body portion **301** and domed filter element **342** held between an inner frame **343** and an outer steel mesh covering **344**. The assembly is held in position by a wire and eyebolt fitting **345** and clamping nut **346**.

Body portion **305** of unit **38** (**Fig.31**), which is fastened to body portion **303** by clamping studs **347**, carries throttle

valve apparatus to control engine speed. It has two vertical bores **348, 349** serving as continuations of the dual throats which started in body portion **303** and these are fitted with throttle valve flaps **351, 352** fixed to a common throttle valve shaft **353** by fixing screws **354**. Both ends of shaft **353** are extended through the wall of body portion **305** to project outwardly therefrom. One end of this shaft is fitted with a bracket **355** via which it is connected as in a conventional carburettor to a throttle cable **356** and also to an automatic transmission kick-down control linkage **357**. A biasing spring **358** acts on shaft **353** to bias throttle flaps toward closed positions as determined by engagement of a setting screw **359** carried by bracket **355** with a plate **361** projecting from body portion **303**.

The other end of throttle valve shaft **353** carries a lever **362** the outer end of which is connected to a wire link **407** by means of which a control connection is made to the valve stem **314** of valve member **311** via a further lever **406** connected to the outer end of the valve stem. This control connection is such that valve member **311** is at all times positioned to pass a quantity of gas mixture appropriate to the engine speed as determined by the throttle setting. The initial setting of valve member **311** can be adjusted by selection between two connection holes **405** in lever **406** and by bending of link **407**.

Body portion **303** is fastened to the bottom body portion **300** of unit **38** by four clamping studs **306**. The bottom body portion has two holes **364, 365** which form continuations of the dual throats and which diverge in the downward direction so as to direct the hydrogen, oxygen and air mixture delivered through these throats outwardly toward the two banks of cylinder inlets. Since this fuel is dry, a small quantity of oil vapour is added to it via a passage **403** in body portion **305** to provide some upper cylinder lubrication. Passage **403** receives oil vapour through a tube **404** connected to a tapping on the engine tapped cover. It discharges the oil vapour down on to a relieved top face part **368** of body portion **300** between holes **364, 365**. The vapour impinges on the relieved face part and is deflected into the two holes to be drawn with the gases into the engine.

In the illustrated gas mixing and delivery unit **38**, it will be seen that passageway **309**, vertical passageway **316**, chamber **324** and nozzles **318** constitute transfer passage means via which the hydrogen mixture pass to the gas flow duct means comprised of the dual throats via which it passes to the engine. The transfer passage means has a gas metering valve comprised of the valve member **311** and the solenoid operated valve is disposed in the transfer passage means between the metering valve and the gas flow duct means. The gas metering valve is set to give maximum flow rate through the transfer passage means at full throttle setting of throttle flaps **351, 352**. The solenoid operated valve acts as an on/off valve so that when the ignition switch is opened the supply of gas to the engine is positively cut-off thereby preventing any possibility of spontaneous combustion in the cylinders causing the engine to "run on". It also acts to trap gas in the electrolytic cell and within the mixing chamber of the mixing and delivery unit so that gas will be available immediately on restarting the engine.

Dumping capacitor **C5** will determine a ratio of charging time to discharge time which will be largely independent of the pulse rate and the pulse rate determined by the oscillation transistor **Q1** must be chosen so that the discharge time is not so long as to produce overheating of the transformer coils and more particularly the secondary coil 89 of transformer **TR2**. Experiments indicate that overheating problems are encountered at pulse rates below about 5,000 and that the system will behave much like a DC system, with consequently reduced performance at pulse rates greater than about 40,000. A pulse rate of about 10,000 pulses per minute will be nearly optimum. With the saw tooth wave input and sharply spiked output pulses of the preferred oscillator circuit the duty cycle of the pulses produced at a frequency of 10,000 pulses per minute was about 0.006. This pulse form helps to minimise overheating problems in the components of the oscillator circuit at the high pulse rates involved. A duty cycle of up to 0.1, as may result from a square wave input, would be feasible but at a pulse rate of 10,000 pulses per minute some of the components of the oscillator circuit would then be required to withstand unusually high heat inputs. A duty cycle of about 0.005 would be a minimum which could be obtained with the illustrated type of oscillator circuitry.

From the foregoing description it can be seen that the electrolytic cell **41** converts water to hydrogen and oxygen whenever ignition switch **44** is closed to activate solenoid **51**, and this hydrogen and oxygen are mixed in chamber **308**. Closure of the ignition switch also activates solenoid **56** to permit entry of the hydrogen and oxygen mixture into chamber **319**, when it mixes with air admitted into the chamber by air valve flap **332**. As described above, air valve flap **332** may be set to admit air in an amount as required to avoid a vacuum condition in the engine.

In operation the throttle cable **356** causes bracket **355** to pivot about throttle valve shaft **353**, which rotates flap **351** to control the amount of hydrogen-oxygen-air mixture entering the engine. At the same time shaft **353** acts via the linkage shown in **Fig.37** to control the position of shaft **314**, and shaft **314** adjusts the amount of hydrogen-oxygen mixture provided for mixing with the air. As shown in **Fig.30**, bracket **355** may also be linked to a shaft **357**, which is connected to the car transmission. Shaft **357** is a common type of shaft used for down shifting into a passing gear when the throttle has been advanced beyond a predetermined point. Thus there is provided a

compact fuel generation system which is compatible with existing internal combustion engines and which has been designed to fit into a standard passenger car.

While the form of apparatus herein described constitutes a preferred embodiment of the invention, it is to be understood that the invention is not limited to this precise form of apparatus, and that changes may be made therein without departing from the scope of the invention.

CLAIMS

1. For an internal combustion engine having inlet means to receive a combustible fuel, fuel supply apparatus comprising:

a vessel to hold an aqueous electrolyte solution;

an anode and a cathode to contact the electrolyte solution within the vessel;

electrical supply means to apply between said anode and said cathode pulses of electrical energy to induce a pulsating current in the electrolyte solution thereby to generate by electrolysis hydrogen and oxygen gases;

gas collection and delivery means to collect the hydrogen and oxygen gases and to direct them to the engine inlet means; and

water admission means to admit water to said vessel;

said electrical supply means comprising a source of direct current electrical energy of substantially uniform voltage and current and electrical converter means to convert that energy to said pulses, said converter means comprising a transformer means having primary coil means energised by direct current energy from said source and secondary coil means inductively coupled to the primary coil means; a dump capacitor connected to the secondary coil means of the transformer means so as to be charged by electrical output of that coil means; oscillator means to derive electrical pulses from direct current energy of said source; a switching device switchable from a non-conducting state to a conducting state in response to each of the electrical pulses derived by the oscillator means and connected to the secondary coil means of the transformer means and the dump capacitor such that each switching from its non-conducting state to its conducting state causes the dump capacitor to discharge and also short circuits the transformer means to cause the switching means to revert to its non-conducting state; and electrical conversion means to receive the pulse discharges from the dump capacitor and to convert them to said pulses of electrical energy which are applied between the anode and cathode.

2. Fuel supply as claimed in claim 1, wherein the electrical supply means applies said pulses of electrical energy at a frequency of ranging between about 5,000 and 40,000 pulses per minute.

3. Fuel supply apparatus as claimed in claim 2, wherein the electrical supply means applies said pulses of electrical energy at a frequency of about 10,000 pulses per minute.

4. Fuel supply apparatus as claimed in claim 2, wherein the electrical supply means comprises a source of direct current electrical energy of substantially uniform voltage and current and electrical converter means to convert that energy to said pulses.

5. Fuel supply apparatus as claimed in claim 1, wherein the electrical conversion means is a voltage step-down transformer comprising a primary coil to receive the pulse discharge from said dump capacitor and a secondary coil electrically connected between the anode and cathode and inductively coupled to the primary coil.

6. Fuel supply apparatus as claimed in claim 5, wherein said cathode encompasses the anode.

7. Fuel supply apparatus as claimed in claim 1, wherein the cathode encompasses the anode which is hollow and the primary and secondary coils of the second transformer means are disposed within the anode.

8. Fuel supply apparatus as claimed in claim 1, wherein the anode is tubular and its ends are closed to form a chamber which contains the primary and secondary coils of the second transformer means and which is charged with oil.

9. In combination with an internal combustion engine having an inlet for combustible fuel, fuel supply apparatus comprising:

a. an electrolytic cell to hold an electrolytic conductor;

b. a first hollow cylindrical electrode disposed within said cell and provided about its outer surface with a series of circumferentially spaced and longitudinally extending flutes;

c. a second hollow cylindrical electrode surrounding said anode and segmented into a series of electrically connected longitudinally extending strip; said strips being equal in number to the number of said flutes, said strips having a total active surface area approximately equal to the total active surface area of said flutes, and said strips being in radial alignment with the crests of said flutes;

d. current generating means for generating a flow of electrolysing current between said first and second electrodes;

e. gas collection and delivery means to collect hydrogen and oxygen gases from the cell and to direct them to said fuel inlet of the engine; and

f. water admission means to admit water to the cell.

10. The combination claimed in claim 9, wherein said current generating means comprises a transformer situated inside said first electrode.

11. The combination claimed in claim 10, wherein the secondary winding of said transformer is connected whereby said first electrode operates as an anode and said second electrode operates as a cathode.

12. The combination claimed in claim 11, wherein said current generating means further comprising means to generate a pulsed current in the primary winding of said transformer.

13. The combination claimed in claim 9, wherein the roots of said flutes are cylindrically curved.

14. The combination claimed in claim 10, wherein said current generating means comprises a source of direct current; a transformer means having primary coil means energised by direct current energy from said source and secondary coil means inductively coupled to the primary coil means; a dump capacitor connected to the secondary coil means of the transformer means so as to be charged by electrical output of that coil means; oscillator means to derive electrical pulses from direct current energy of said source, a switching device switchable from a non-conducting state to a conducting state in response to each of the electrical pulses derived by the oscillator means and connected to the secondary coil means of the transformer means and the dump capacitor such that each switching from its non-conducting state to its conducting state causes the dump capacitor to discharge and also short circuits the transformer means to cause the switching means to revert to its non-conducting state; and electrical conversion means to receive the pulse discharges from the dump capacitor and to convert them to said pulses of electrical electrical which are applied between said first and second electrodes.

15. The combination claimed in claim 10, wherein the electrical conversion means comprises a voltage step-down transformer having a primary coil to receive the pulse discharge from said dump capacitor and a secondary coil electrically connected between said first and second electrodes.

16. The combination of an internal combustion engine having an inlet to receive a combustible fuel and fuel supply apparatus comprising:

a vessel to hold an aqueous electrolyte solution;

a first hollow cylindrical electrode disposed within said vessel and provided about its outer surface with a series of circumferentially spaced and longitudinally extending flutes;

a second hollow cylindrical electrode surrounding the first electrode and segmented into a series of electrically connected longitudinally extending strips; said strips being equal in number to the number of said flutes and being in radial alignment with the crests of said flutes;

current generating means for generating a pulsating current between said first and second electrodes to produce hydrogen and oxygen gases within the vessel;

gas collection and delivery means to collect the hydrogen and oxygen gases and to direct them to the engine inlet means; and

water admission means to admit water to the vessel.

17. The combination claimed in claim 26, wherein said current generating means comprises a source of direct current; a first transformer means having primary coil means energised by direct current energy from said source and secondary coil means inductively coupled to the primary coil means; a dump capacitor connected to the secondary coil means of the first transformer means so as to be charged by electrical output of that coil means; oscillator means to derive electrical pulses from direct current energy of said source; a switching device switchable from non-conducting state to a conducting state in response to each of the electrical pulses derived by the oscillator means and connected to the secondary coil means of the first transformer means and the dump capacitor such that each switching from its non-conducting state to its conducting state causes the dump capacitor to discharge and also short circuits the first transformer means to cause a second transformer to receive the pulse discharges from the dump capacitor and to transform them to pulses of electrical energy which are applied between said first and second electrodes.

18. The combination claimed in claim 26, wherein the second transformer means has primary coil means energised by the pulse discharges from the dump capacitor and secondary coil means which is inductively coupled to the primary coil means and is connected to the first and second electrodes such that the first electrode operates as an anode and the second electrode operates as a cathode.

The Water Fracture Cell of Christopher Eccles

UK Patent App. 2,324,307 21st October 1998 Inventor: Christopher R. Eccles

FRACTURE CELL APPARATUS

Please note that this is a re-worded extract from the patent and the diagrams have been adapted slightly. It describes a device for splitting water into hydrogen and oxygen gasses via electrolysis using electrodes which are placed on the **outside** of the cell.

ABSTRACT

Fracture cell apparatus including a capacitive fracture cell **20** comprising a container **21** having walls **21a**, and **21b** made of non-electrically conducting material for containing a liquid dielectric **26**, and spaced apart electrodes **22** and **23** positioned outside container **21** with the liquid dielectric **26** between the electrodes, and a mechanism (**8a** and **8b** in **Fig.1** and **Fig.2**) for applying positive and negative voltage pulses to each of the electrods **22** and **23**. In use, whenever one of a positive voltage pulse and a negative voltage pulse is applied to one of the two electrodes, the other of a positive voltage pulse and a negative voltage pulse is applied to the other of the two electrodes, thereby creating an alternating electric field across the liquid dielectric to cause fracture of the liquid dielectric **26**. The apparatus may be used for generating hydrogen gas.

FRACTURE CELL APPARATUS

This invention relates to a fracture cell apparatus and to a method of generating fuel gas from such fracture cell apparatus. In particular, but not exclusively, the invention relates to an apparatus and method for providing fuel gas from water.

Conventionally, the principal methods of splitting a molecular species into its component atomic constituents have been either purely chemical or purely electrolytic:

Purely chemical reactions always involve "third-party" reagents and do not involve the interaction of(l) an applied external electrical influence, and (2) a simple substance. Conventional electrolysis involves the passage of an electric current through a medium (the electrolyte), such current being the product of ion-transits between the electrodes of the cell. When ions are attracted towards either the cathode or the anode of a conventional electrolytic cell, they either receive or donate electrons on contact with the respective electrode. Such electron exchanges constitute the current during electrolysis. It is not possible to effect conventional electrolysis to any useful degree without the passage of this current; it is a feature of the process.

A number of devices have recently been described which purport to effect "fracture" of, particularly, water by means of resonant electrostatic phenomena. In particular one known device and process for producing oxygen and hydrogen from water is disclosed in US-A-4936961. In this known device a so-called fuel cell water "capacitor" is provided in which two concentrically arranged spaced apart "capacitor" plates are positioned in a container of water, the water contacting, and serving as the dielectric between, the "capacitor" plates. The "capacitor" is in effect a charge-dependent resistor which begins to conduct after a small displacement current begins to flow. The ”capacitor" forms part of a resonant charging circuit that includes an inductance in series with the "capacitor". The "capacitor" is subjected to a pulsating, unipolar electric charging voltage which subjects the water molecules within the "capacitor" to a pulsating electric field between the capacitor plates. The "capacitor" remains charged during the application of the pulsating charging voltage causing the covalent electrical bonding of the hydrogen and oxygen atoms within the water molecules to become destabilised, resulting in hydrogen and oxygen atoms being liberated from the molecules as elemental gases.

Such known fracture devices have, hitherto, always featured, as part of their characteristics, the physical contact of a set of electrodes with the water, or other medium to be fractured. The primary method for limiting current flow through the cell is the provision of a high impedance power supply network, and the heavy reliance on the time-domain performance of the ions within the water (or other medium), the applied voltage being effectively "switched off" in each cycle before ion-transit can occur to any significant degree.

In use of such a known system, there is obviously an upper limit to the number of ion-migrations, electron captures, and consequent molecule-to-atom disruptions which can occur during any given momentary application

of an external voltage. In order to perform effectively, such devices require sophisticated current-limiting and very precise switching mechanisms.

A common characteristic of all such known fracture devices described above, which causes them to behave as though they were conventional electrolysis cells at some point in time after the application of the external voltage, is that they have electrodes in actual contact with the water or other medium.

The present invention seeks to provide an alternative method of producing fracture of certain simple molecular species, for example water.

According to one aspect of the present invention there is provided a fracture cell apparatus including a capacitive fracture cell comprising a container having walls made of non-electrically conducting material for containing a liquid dielectric, and spaced apart electrodes positioned outside the container with the liquid dielectric between the electrodes, and a mechanism for applying positive and negative voltage pulses to each of the electrodes so that, whenever one of a positive voltage pulse and a negative voltage pulse is applied to one of the two electrodes, the other voltage pulse is applied to the other electrode, thereby creating an alternating electric field across the liquid dielectric to cause fracture of the liquid dielectric.

In the apparatus of this invention, the electrodes do not contact the liquid dielectric which is to be fractured or disrupted. The liquid to be fractured is the simple dielectric of a capacitor. No purely ohmic element of conductance exists within the fracture cell and, in use, no current flows due to an ion-carrier mechanism within the cell. The required fracture or disruption of the liquid dielectric is effected by the applied electric field whilst only a simple displacement current occurs within the cell.

Preferably the liquid dielectric comprises water, e.g. distilled water, tap water or deuterated water.

Conveniently each electrode comprises a bipolar electrode.

The mechanism for alternately applying positive and negative pulses, provides step voltages alternately to the two electrodes with a short period of time during each charge voltage cycle in which no step voltage is applied to either electrode. Typically, step voltages in excess of 15 kV, typically about 25 kV, on either side of a reference potential, e.g. earth, are applied to the electrodes. In effect, trains of pulses having alternating positive and negative values are applied to the electrodes, the pulses applied to the different electrodes being "phase shifted". In the case where each electrode comprises a bipolar electrode, each bipolar electrode comprising first and second electrode "plates" electrically insulated from each other, a train of positive pulses is arranged to be applied to one electrode plate of each bipolar electrode and a train of negative pulses is arranged to be applied to the other electrode plate of each bipolar electrode. One electrode plate of one bipolar electrode forms a first set with one electrode plate of the other bipolar electrode and the other electrode plate of the one bipolar electrode forms a second set with the other electrode plate of the other bipolar electrode. For each set, a positive pulse is applied to one electrode plate and a negative pulse is applied simultaneously to the other electrode plate. By alternately switching the application of positive and negative pulses from one to the other set of electrode plates, an "alternating" electric field is generated across the dielectric material contained in the container. The pulse trains are synchronised so that there is a short time interval between the removal of pulses from one electrode plate set and the application of pulses to the other electrode plate set.

According to another aspect of the present invention, there is provided a method of generating gas comprising, applying positive and negative voltage pulses alternately to the electrodes (positioned either side of, but not in contact with, a liquid dielectric), the voltage pulses being applied so that, whenever one of a positive voltage pulse and a negative voltage pulse is applied to one of the two electrodes, the other of a positive voltage pulse and a negative voltage pulse is applied to the other of the two electrodes, the applied voltage pulses generating an alternating electric field across the liquid dielectric causing fracture of the liquid dielectric into gaseous media. Preferably, voltages of at least 15 kV, e.g. 25 kV, either side of a reference value, e.g. earth, are applied across the liquid dielectric to generate the alternating electric field.

An embodiment of the invention will now be described by way of example only, with particular reference to the accompanying drawings, in which:

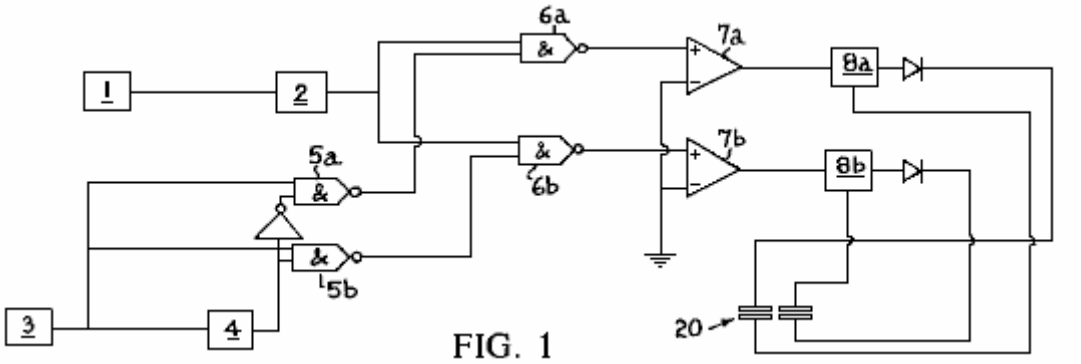

FIG. 1

Fig.1 is a circuit diagram of fracture cell apparatus according to the invention;

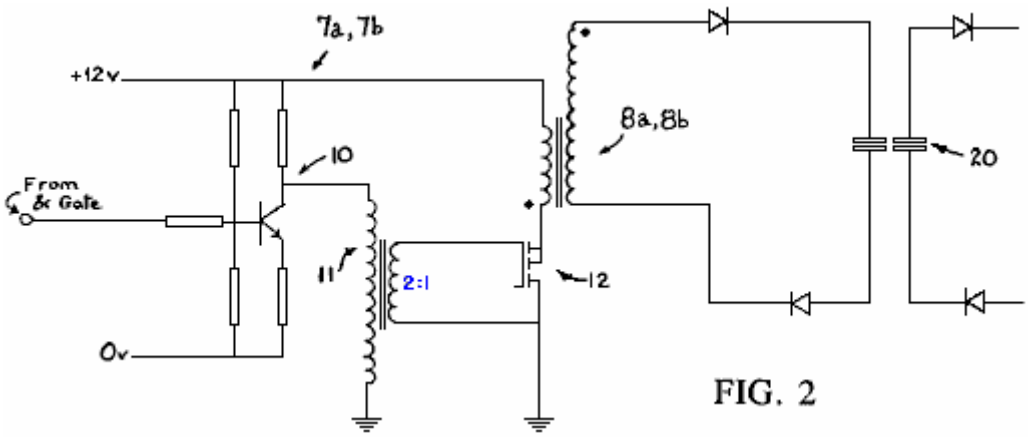

FIG. 2

Fig.2 shows in more detail a part of the circuit diagram of Figure 1;

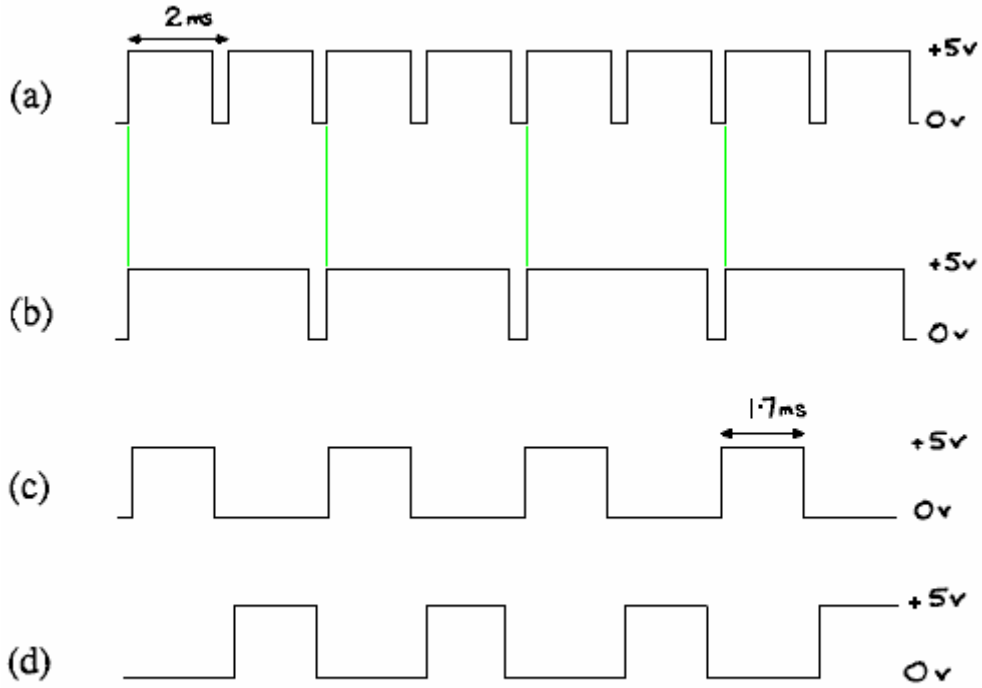

FIG. 3

Fig.3 shows the different waveforms at various parts of the circuit diagram of **Fig.1**;

FIG. 4

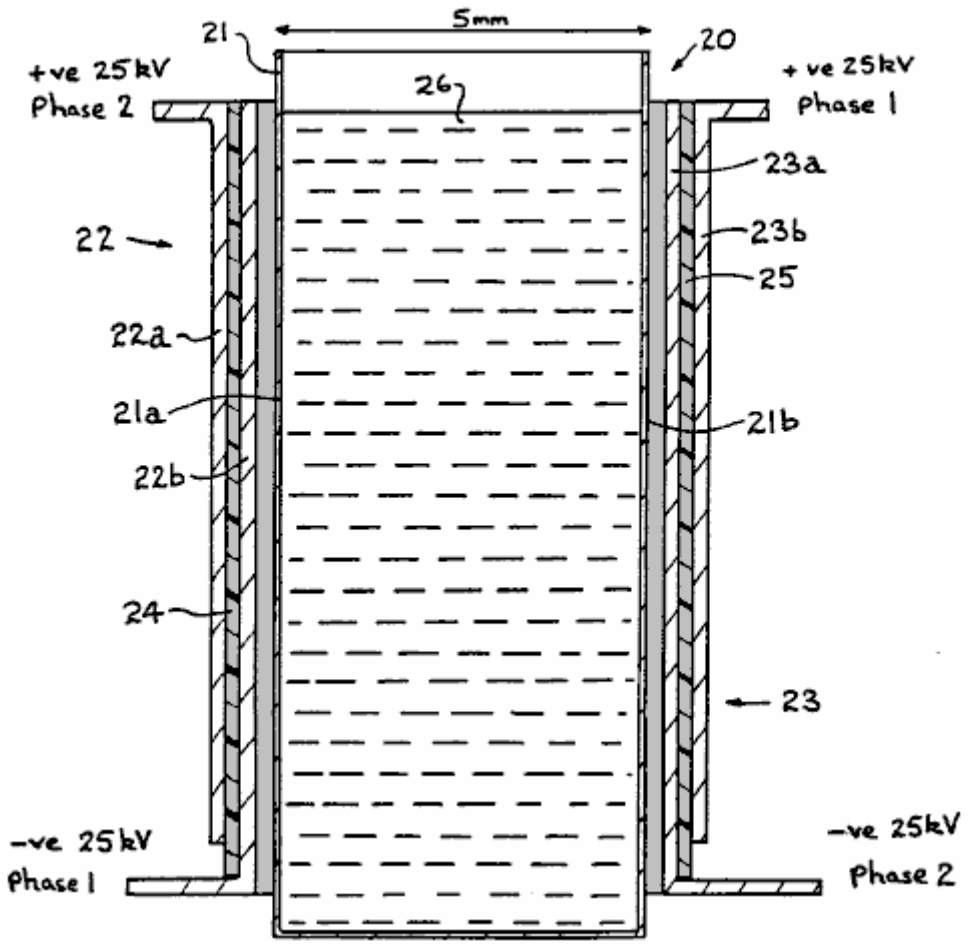

Fig.4 is a schematic diagram of a fracture cell for use in fracture cell apparatus according to the invention,

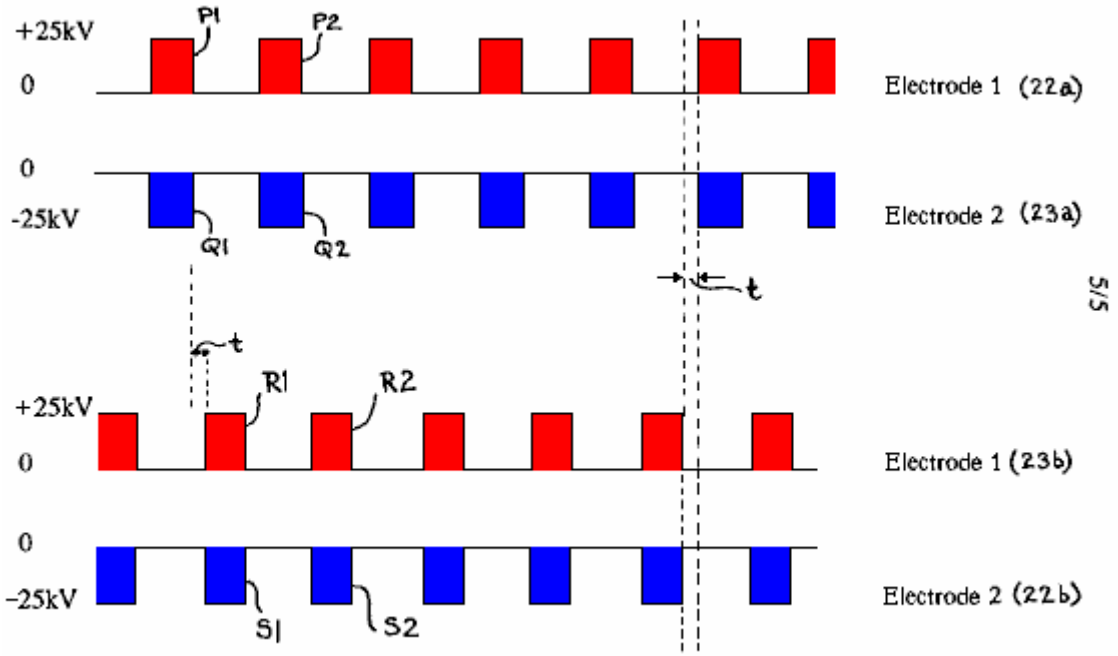

FIG. 5

Fig.5 shows trains of pulses applied to electrodes of the fracture cell apparatus according to the invention.

If a large electric field is applied across a pair of electrode plates positioned either side of a cell containing water, disruption of the water molecules will occur. Such disruption yields hydrogen nuclei and HO- ions. Such a molecular disruption is of little interest in terms of obtaining a usable result from the cell. A proton-rich zone exists for as long as the field exists and quickly re-establishes equilibrium ion-product when the field is removed.

One noticeable side-effect, however, is that the hydroxyl ions (which will migrate to the +ve charged plate) are stripped of electrons as they approach the cell boundary. Any negatively-charged ion will exhibit this behaviour in a strong enough potential well, but the OH ions have a strong tendency to such dissociation. This results, momentarily, in a region of negative-charge close to the positive cell boundary. Thus, on opposite sides of the active cell, there are hydrogen nuclei (free proton zone) and displaced electrons (-ve charge zone), both tending to increase in density closer to the charged plates.

If, at this point, the charge is removed from the plates, there is a tendency for the charge-zones to move, albeit very slowly, towards the centre of the active cell. The ion-transit rates of free electrons and of hydrogen nuclei are, however, some two orders of magnitude greater than either H30+ ions or OH ions.

If the charges are now replaced on the plates, but with opposite polarity, the interesting and potentially useful aspect of the process is revealed. Hydrogen nucleus migration is accelerated in the direction of the new -ve plate and free electron migration takes place towards the new +ve plate. Where there is a sufficient concentration of both species, including the accumulations due to previous polarity changes, monatomic hydrogen is formed with the liberation of some heat energy. Normal molecular association occurs and H2 gas bubbles off from the cell.

Also existing OH radicals are further stripped of hydrogen nuclei and contribute to the process. Active, nascent 0-- ions rapidly lose their electronic space charge to the +ve field and monatomic oxygen forms, forming the diatomic molecule and similarly bubbling off from the cell.

Thus, the continuous application of a strong electric field, changing in polarity every cycle, is sufficient to disrupt water into its constituent gaseous elements, utilising a small fraction of the energy required in conventional electrolysis or chemical energetics, and yielding heat energy of the enthalpy of formation of the diatomic bonds in the hydrogen and oxygen.

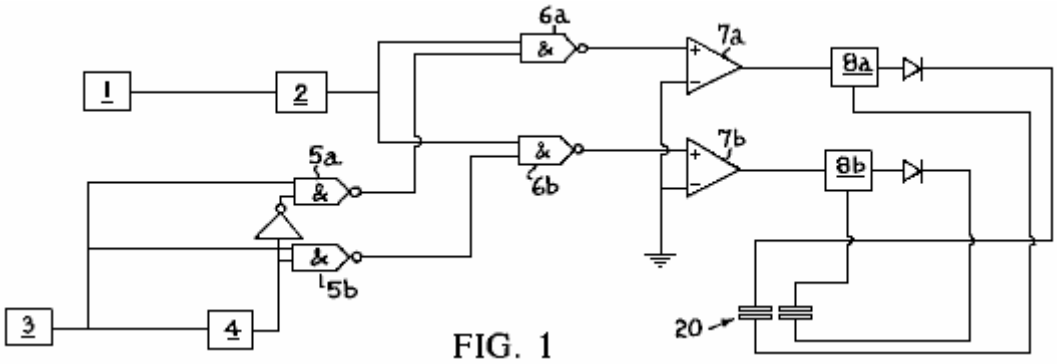

FIG. 1

Apparatus for performing the above process is described below. In particular, electronic circuitry to effect the invention is shown in the simplified block diagram of **Fig.1**. In **Fig.1** a pulse-repetition frequency (PRF) generator **1** comprises an astable multivibrator clock running at a frequency which is preset for any application, but able to be varied across a range of approximately 5-30 kHz. The generator **1** drives, by triggering with the trailing edge of its waveform, a pulse-width (PW) timer **2**.

The output of the timer **2** is a train of regular pulses whose width is determined by the setting of timer **2** and whose repetition frequency is set by the PRF generator **1**.

A gate clock **3** comprises a simple 555-type circuit which produce a waveform (see **Fig.3a**) having a period of 1 to 5 ms, e.g. 2 ms as shown in **Fig.3a**. The duty cycle of this waveform is variable from 50% to around 95%. The waveform is applied to one input of each of a pair of AND gates **5a** and **5b** and also to a binary divide-by-two counter **4**. The output of the counter **4** is shown in **Fig.3b**.

The signal from the divide-by-two counter **4** is applied directly to the AND gate **5b** serving phase-2 driver circuitry **7a** but is inverted before application to the AND gate **5a** serving phase-l driver circuitry **7a**. The output of the AND gate **5a** is therefore ((CLOCK and (NOT (CLOCK)/2)) and the output of the AND gate **5b** is ((CLOCK) and (CLOCK/2)), the waveforms, which are applied to pulse-train gates **6a** and **6b**, being shown in **Fig.3c** and **Fig.3d**.

Trains of 5-30 kHz pulses are applied to drive amplifiers **7a** and **7b** alternately, with a small "off"-period during which no pulses are applied to either amplifier. The duration of each "off" period is dependent upon the original duty cycle of the clock timer **3**. The reason for the small "off" period in the driver waveforms is to prevent local corona arc as the phases change over each cycle.

The drive amplifiers **7a** and **7b** each use a BC182L transistor **10** (see **Fig.2**), small toroidal 2:1 pulse transformer **11** and a BUZll power-MOSFET **12** and apply pulse packets across the primary windings of their respective 25 kV line-output transformers **8a** and **8b** to produce an EHT ac voltage of high frequency at their secondary windings. The secondary windings are 'lifted' from system ground and provide, after simple half-wave rectification, the applied field for application to cell **20** (see **Fig.4**).

Cell **20** comprises a container **21** having walls **21a**, **21b** of electrically insulating material, e.g. a thermoplastics material, such as polymethyl methacrylate, typically spaced about 5 mm apart, and bipolar cell electrodes generally designated **22** and **23** and typically constructed from aluminium foil, positioned outside the walls **21a** and **21b**. Each bipolar cell electrode comprises a pair of electrode plates **22a** and **22b** (or **23a** and **23b**) for each side of the cell **20** separated from each other by an electrically insulating layer **24** (or **25**) , e.g. of polycarbonate plastics material about 0.3 mm thick.

The electrode plates **22a** and **23a** form one set (set A) of electrode plates positioned on opposite sides of container **21** and the electrode plates **22b** and **23b** form another set of electrode plates positioned on opposite sides of the container **21**. An insulating layer **25**, e.g. of polycarbonate material, similar to the insulating layers **24a** or **24b** may be positioned between each bipolar cell electrode **22** (or **23**) and its adjacent container wall **21a**(or **21b**). A liquid electrolyte, preferably water, is placed in the container **21**.

In use, a train of positive pulses is applied to the electrode plates **22a** and **23b** and a train of negative pulses is applied to the electrode plates **23a** and **22b**. The timing of the pulses is shown schematically in **Fig.5**, which illustrates that, for set A (or for set B), whenever a positive pulse is applied to electrode plate **22a** (or **23b**), a negative pulse is also applied to electrode plate **23a** (or **22b**). However the pulses applied to the electrode plate set A are "out of phase" with the pulses applied to the electrode plate set B. In each train of pulses, the duration of each pulse is less than the gap between successive pulses.

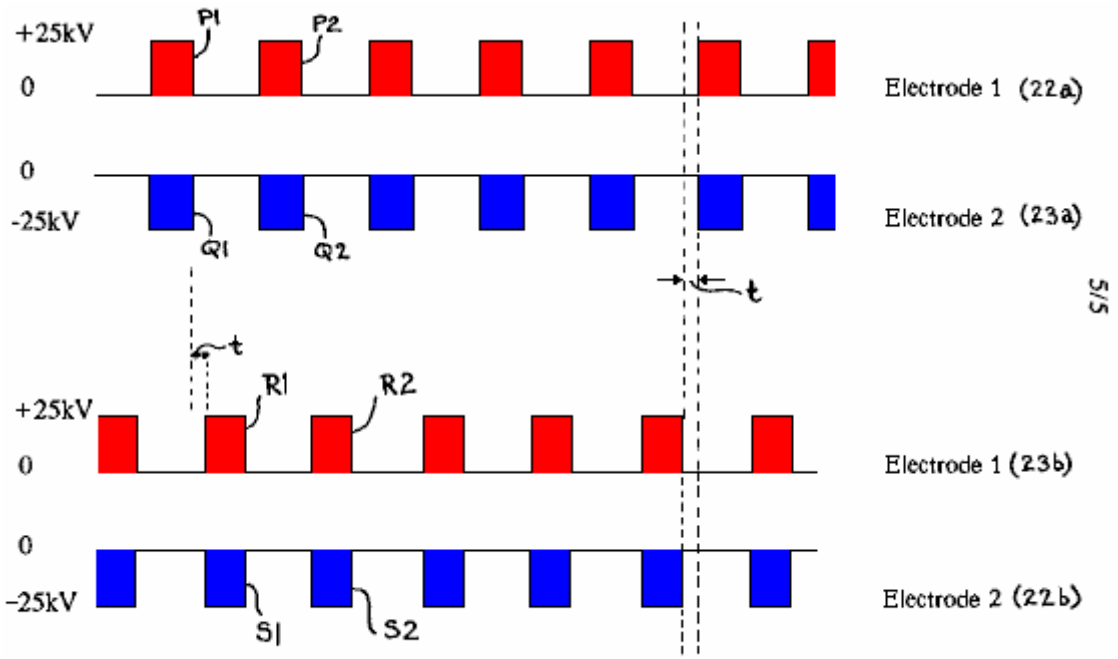

FIG. 5

By arranging for the pulses of electrode plate set B to be applied in the periods when no pulses are applied to the electrode plate set A, the situation arises where pairs of pulses are applied successively to the electrode plates of different sets of electrode plates, there being a short interval of time when no pulses are applied between each successive application of pulses to pairs of electrode plates. In other words, looking at **Fig.5**, pulses **P1** and **Q1** are applied at the same time to the electrode plates **22a** and **23a**. The pulses **P1** and **Q1** are of the same pulse length and, at the end of their duration, there is a short time period **t** before pulses **R1** and **S1** are applied to the electrode plates **23b** and **22b**.

The pulses **R1** and **S1** are of the same pulse length as the pulses **P1** and **Q1** and, at the end of their duration, there is a further time **t** before the next pulses **P2** and **Q2** are applied to the electrode plates **22a** and **23a**. It will be appreciated that whenever a pulse of one sign is applied to one of the electrode plates of a set, a pulse of the opposite sign is applied to the other electrode plate of that set.

Furthermore, by switching from one to the other electrode plate set the polarities applied across the container are repeatedly switched resulting in an "alternating" electric field being created across the "liquid dielectric" water in the container.

The Electrolyser of Spiro Spiros

Patent WO 9528510 26th October 1995 Inventor: Spiro Ross Spiros

IMPROVEMENTS IN ELECTROLYSIS SYSTEMS
& THE AVAILABILITY OF OVER-UNITY ENERGY

This patent application shows the details of an electrolyser system which it is claimed, produces greater output than the input power needed to operate it.

ABSTRACT

A looped energy system for the generation of excess energy available to do work is disclosed. The system comprises an electrolysis cell unit **150** receiving a supply of water to liberate separated hydrogen gas **154** and oxygen **156** by electrolysis driven by a DC voltage **152** applied across respective anodes and cathodes of the cell unit **150**. A hydrogen gas receiver **158** receives and stores hydrogen gas liberated by the cell unit **150**, and an oxygen gas receiver **160** receives and stores oxygen gas liberated by the cell unit **150**. A gas expansion device **162** expands the stored gases to recover expansion work, and a gas combustion device **168** mixes and combusts the expanded hydrogen gas and oxygen gas to recover combusted work. A proportion of the sum of the expansion work and the combustion work sustains electrolysis of the cell unit to retain operational gas pressure in the gas receivers **158**, **160** such that the energy system is self-sustaining, and there is excess energy available from the sum of energies.

TECHNICAL FIELD OF THE INVENTION

The present invention relates to the generation of hydrogen gas and oxygen gas from water, either as an admixture or as separated gases, by the process of electrolysis, and relates further to applications for the use of the liberated gas. Embodiments of the invention relate particularly to apparatus for the efficient generation of these gases, and to use of the gases in an internal combustion engine and an implosion pump. The invention also discloses a closed-loop energy generation system where latent molecular energy is liberated as a form of 'free energy' so the system can be self-sustaining.

Reference is made to commonly-owned International patent application No. PCT/AU94/000532, having the International filing date of 6 September 1994.

Background Art

The technique of electrolysing water in the presence of an electrolyte such as sodium hydroxide (NaOH) or potassium hydroxide (KOH) to liberate hydrogen and oxygen gas (H2, 02) is well known. The process involves applying a DC potential difference between two or more anode/cathode electrode pairs and delivering the minimum energy required to break the H-O bonds (i.e. 68.3 kcal per mole @ STP).

The gases are produced in the stoichiometric proportions for O2:H2 of 1:2 liberated respectively from the anode (+) and cathode (-).

Reference can be made to the following texts:
"Modern Electrochemistry, Volume 2, John O'M. Bockris and Amulya K.N. Reddy, Plenum Publishing Corporation",
"Electro-Chemical Science, J. O'M. Bockris and D.M. Drazic, Taylor and Francis Limited" and
"Fuel Cells, Their Electrochemistry, J. O'M. Bockris and S. Srinivasan, McGraw-Hill Book Company".

A discussion of experimental work in relation to electrolysis processes can be obtained from "Hydrogen Energy, Part A, Hydrogen Economy Miami Energy Conference, Miami Beach, Florida, 1974, edited by T. Nejat Veziroglu, Plenum Press". The papers presented by J. O'M. Bockris on pages 371 to 379, by F.C. Jensen and F.H. Schubert on pages 425 to 439 and by John B. Pangborn and John C. Sharer on pages 499 to 508 are of particular relevance.

On a macro-scale, the amount of gas produced depends upon a number of variables, including the type and concentration of the electrolytic solution used, the anode/cathode electrode pair surface area, the electrolytic resistance (equating to ionic conductivity, which is a function of temperature and pressure), achievable current density and anode/cathode potential difference. The total energy delivered must be sufficient to disassociate the

water ions to generate hydrogen and oxygen gases, yet avoid plating (oxidation/reduction) of the metallic or conductive non-metallic materials from which the electrodes are constructed.

DISCLOSURE OF THE INVENTION

The invention discloses a looped-energy system for the generation of excess energy available to do work, the said system comprising of:

An electrolysis cell unit receiving a supply of water for liberating separated hydrogen gas and oxygen gas by electrolysis due to a DC voltage applied across respective anodes and cathodes of the cell;

A hydrogen gas receiver to receive and store the hydrogen gas liberated by the electrolysis cell;

An oxygen gas receiver to receive and store the oxygen gas liberated by the electrolysis cell;

A gas-expansion chamber to allow the expansion of the stored gases to recover expansion work; and

A gas-combustion mechanism for mixing and combusting the expanded hydrogen and oxygen gases to recover combustion work; and wherein a proportion of the sum of the expansion work and the combustion work sustains the electrolysis of the electrolysis cell in order to retain the operational gas pressure in the hydrogen and oxygen gas receivers so that the energy system is self-sustaining and there is excess energy available.

The invention further discloses a method for the generation of excess energy available to do work by the process of electrolysis, said method comprising the steps of: electrolysing water by a DC voltage to liberate separated hydrogen gas and oxygen gas; separately receiving and storing the hydrogen and oxygen gases in a manner to be self-pressuring; separately expanding the stored gas to recover expansion energy; burning the expanded gases to recover combustion energy; and applying a portion of the sum of the expansion work and the combustion work as the DC voltage to retain operational gas pressures and sustain the electrolysis, there being excess energy available to do this.

The invention also discloses an internal combustion engine powered by hydrogen and oxygen comprising of:

At least one cylinder and

At least one reciprocating piston within the cylinder;

A hydrogen gas input port in communication with the cylinder for receiving a supply of pressurised hydrogen;

An oxygen gas input port in communication with the cylinder for receiving a supply of pressurised oxygen; and

An exhaust port in communication with the cylinder and wherein the engine can be operated in a two-stroke manner whereby, at the top of the stroke, hydrogen gas is supplied through the respective inlet port to the cylinder driving the piston downwards, oxygen gas then is supplied through the respective inlet port to the cylinder to drive the cylinder further downwards, after which time self-detonation occurs and the piston moves to the bottom of the stroke and upwards again with the exhaust port opened to force out the water vapour resulting from the detonation.

The invention also discloses an implosion pump comprising of;

A combustion chamber interposed, and in communication with,

An upper reservoir and a lower reservoir separated by a vertical distance across which water is to be pumped, this chamber receiving admixed hydrogen and oxygen at a pressure sufficient to lift a volume of water the distance from there to the top reservoir, the gas in the chamber then being ignited to create a vacuum in the chamber to draw water from the lower reservoir to fill the chamber, whereupon a pumping cycle is established and can be repeated.

The invention also discloses a parallel stacked arrangement of cell plates for a water electrolysis unit, the cell plates alternately forming an anode and cathode of the electrolysis unit, and the arrangement including separate

hydrogen gas and oxygen gas outlet ports respectively linked to the anode cell plates and the cathode cell plates and extending longitudinally along the plate stack. These outlet ports are arranged so as to be insulated from the anode and cathode plates.

DESCRIPTION OF THE DRAWINGS

Figs.1 1a-16 of noted International application no. PCT/AU94/000532 are reproduced to aid description of the present invention, but herein denoted as Figs.la-6:

Fig.1A and **Fig.1B** show an embodiment of a cell plate:

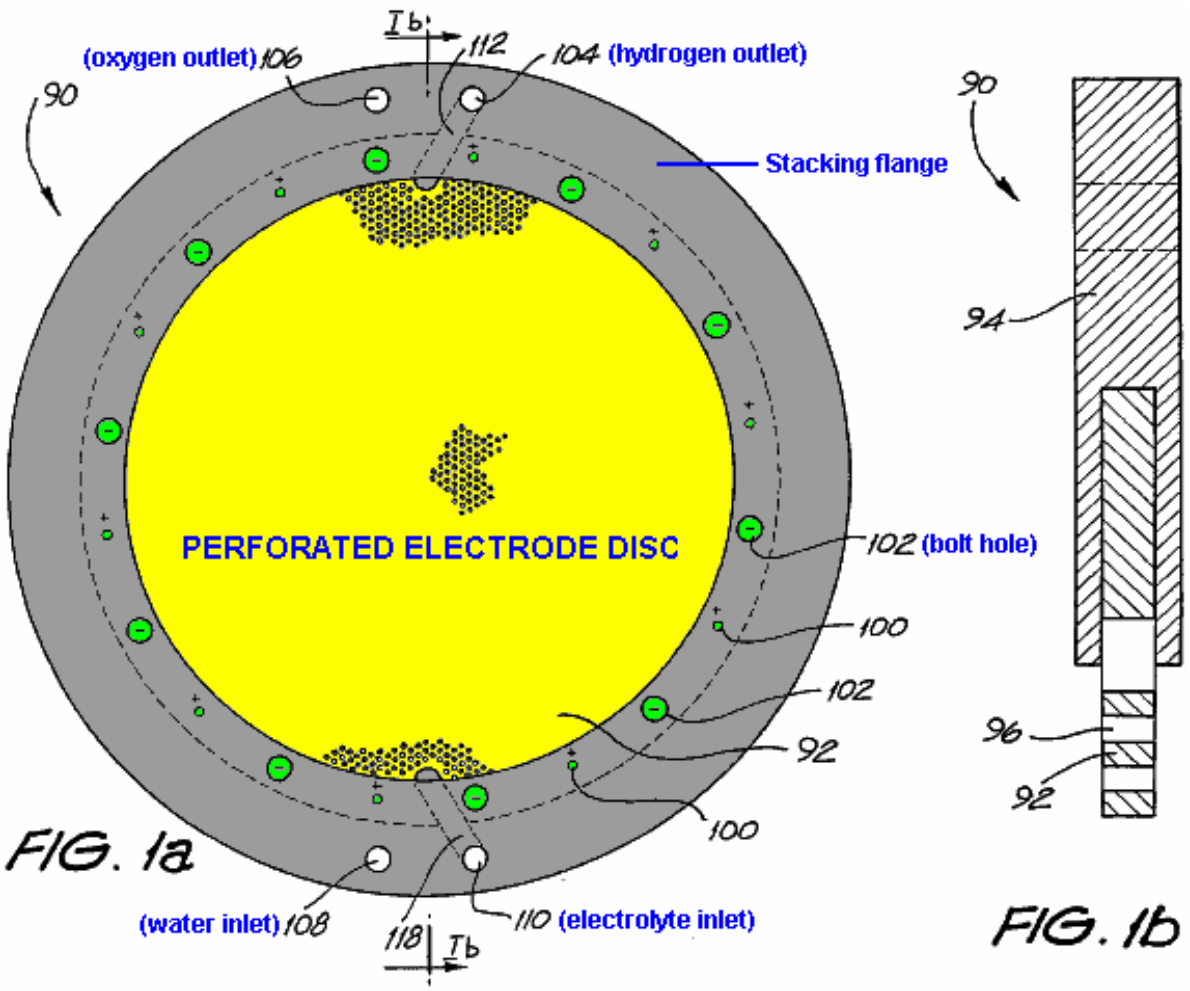

Fig.2A and **Fig.2B** show a complementary cell plate to that of Fig.lA and Fig1B:

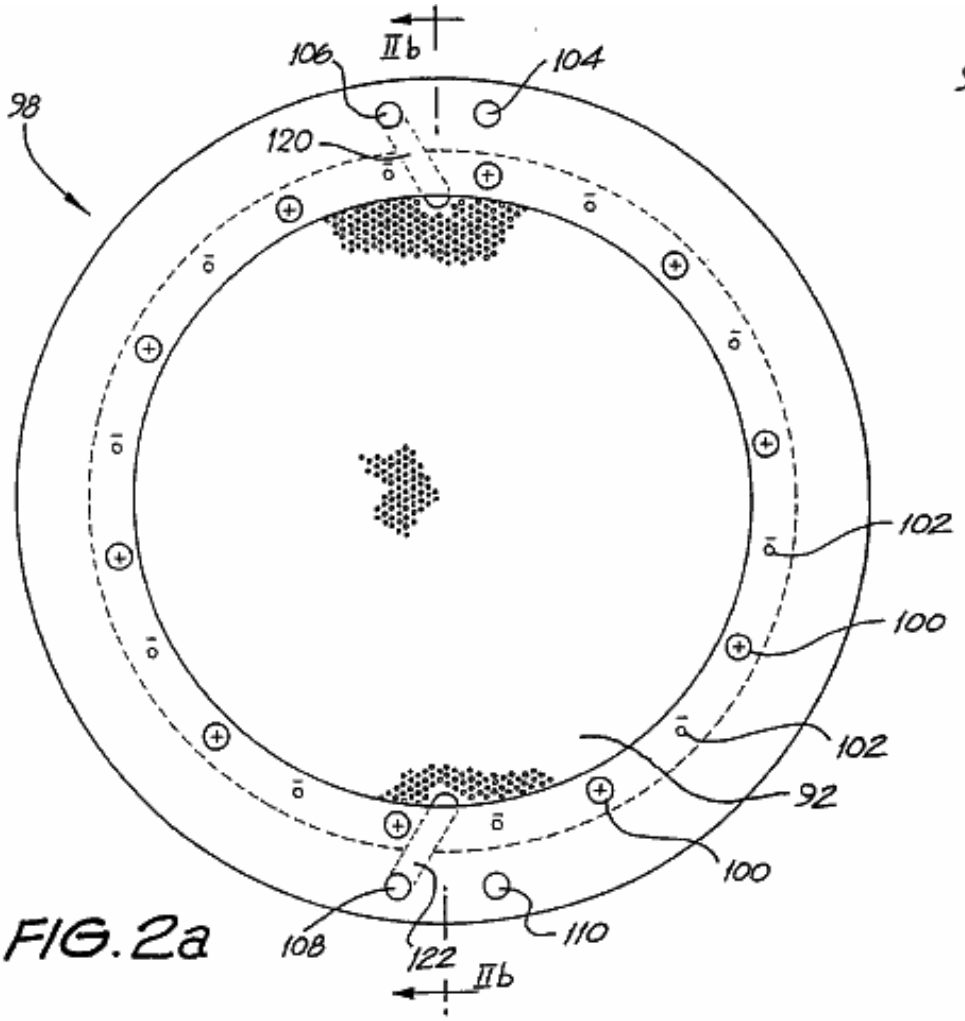

FIG. 2a

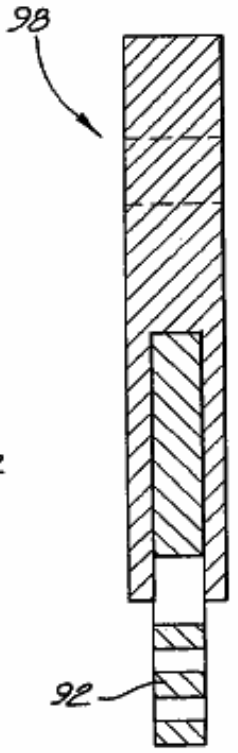

FIG. 2b

Fig.3 shows detail of the perforations and porting of the cell plates of Figs. lA,lB, 2A and 2B:

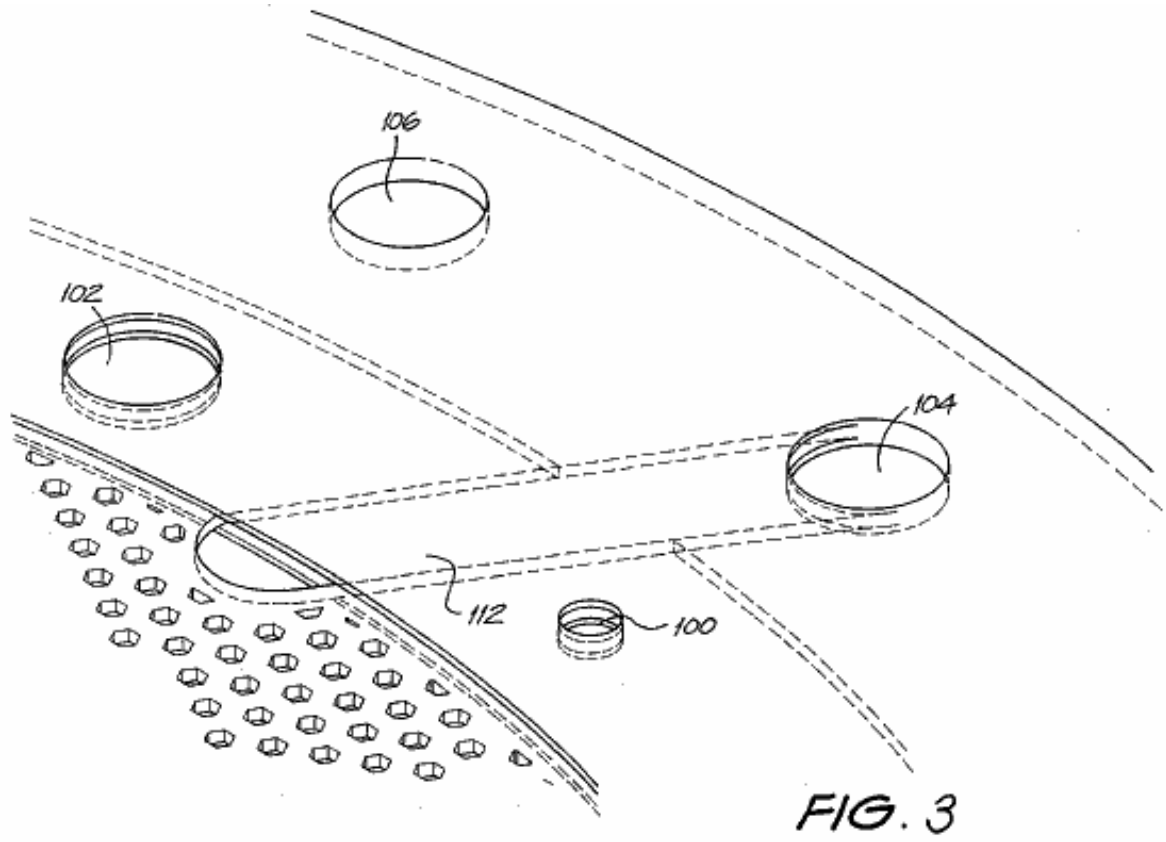

FIG. 3

Fig.4 shows an exploded stacked arrangement of the cell plates of Figs. lA,lB, 2A and 2B:

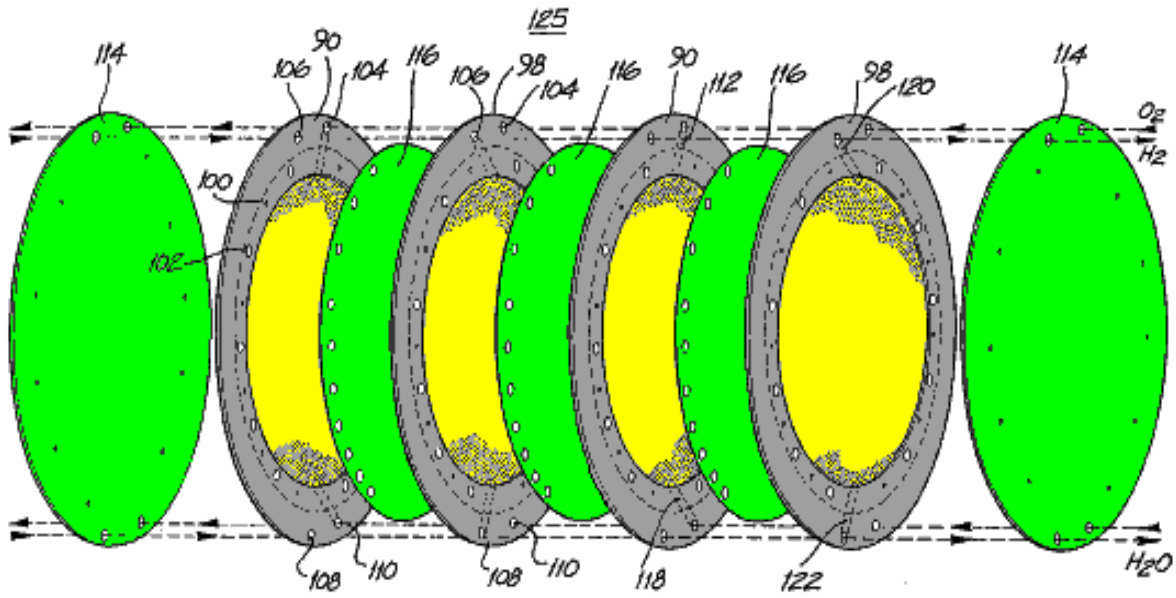

FIG. 4

Fig.5A shows a schematic view of the gas separation system of Fig.4:

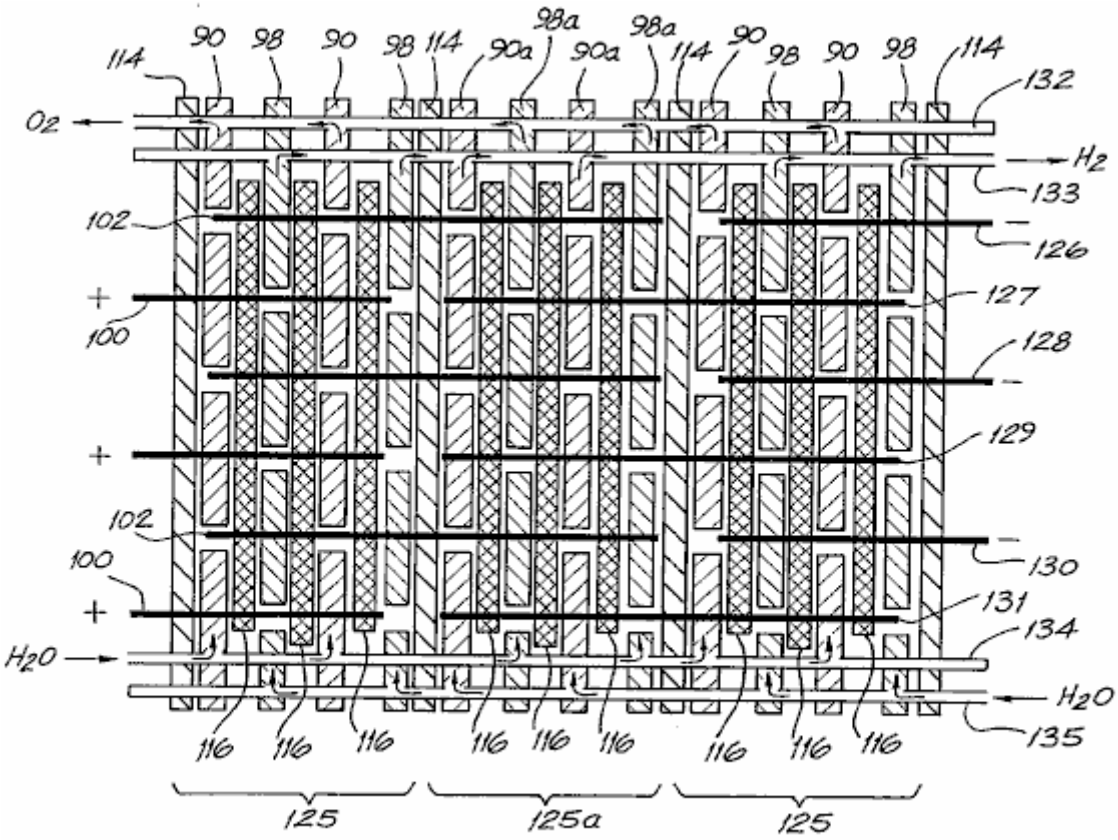

FIG. 5a

Fig.5B shows a stylised representation of Fig.5a:

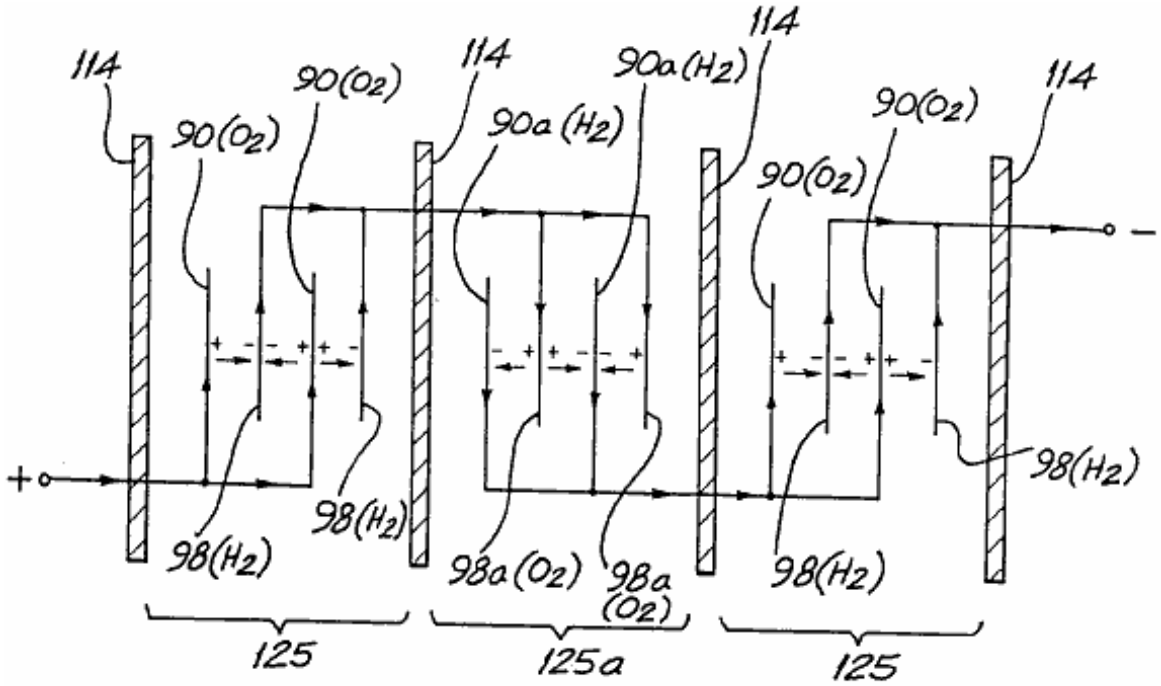

FIG. 5b

Fig.5C shows an electrical equivalent circuit of Fig.5A and

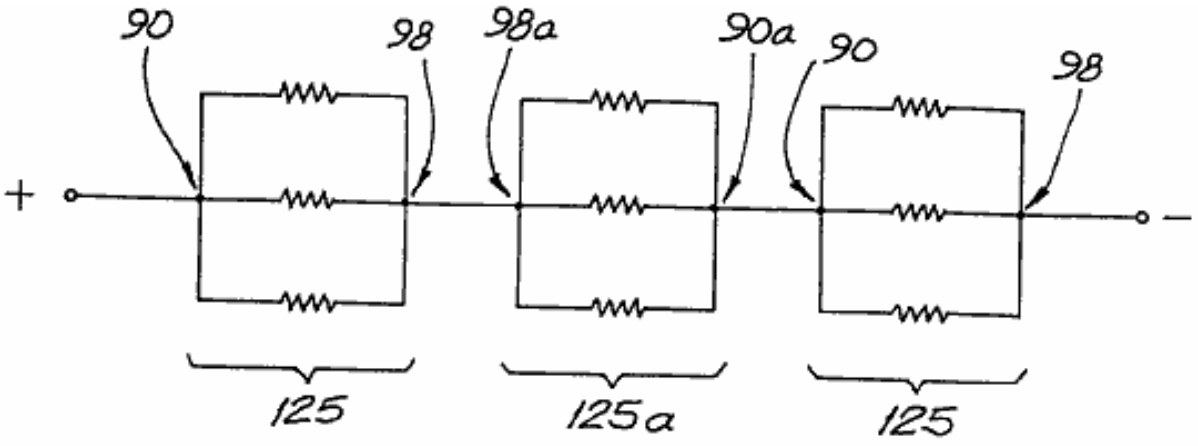

FIG. 5c

Fig.6 shows a gas collection system for use with the cell bank separation system of Figs. 4 and 5a.

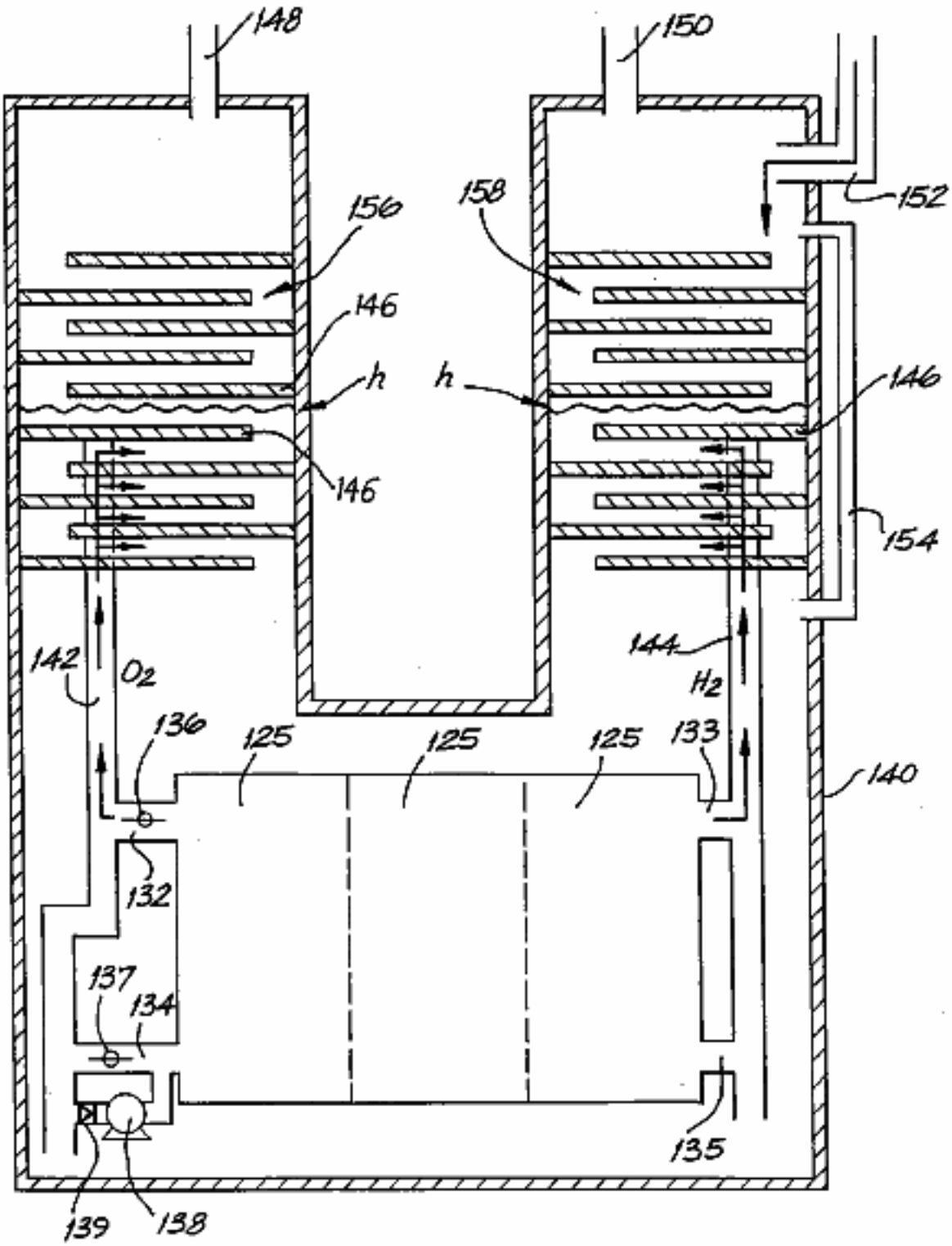

FIG. 6

The remaining drawings are:
Fig.7A and **Fig.7B** are views of a first cell plate:

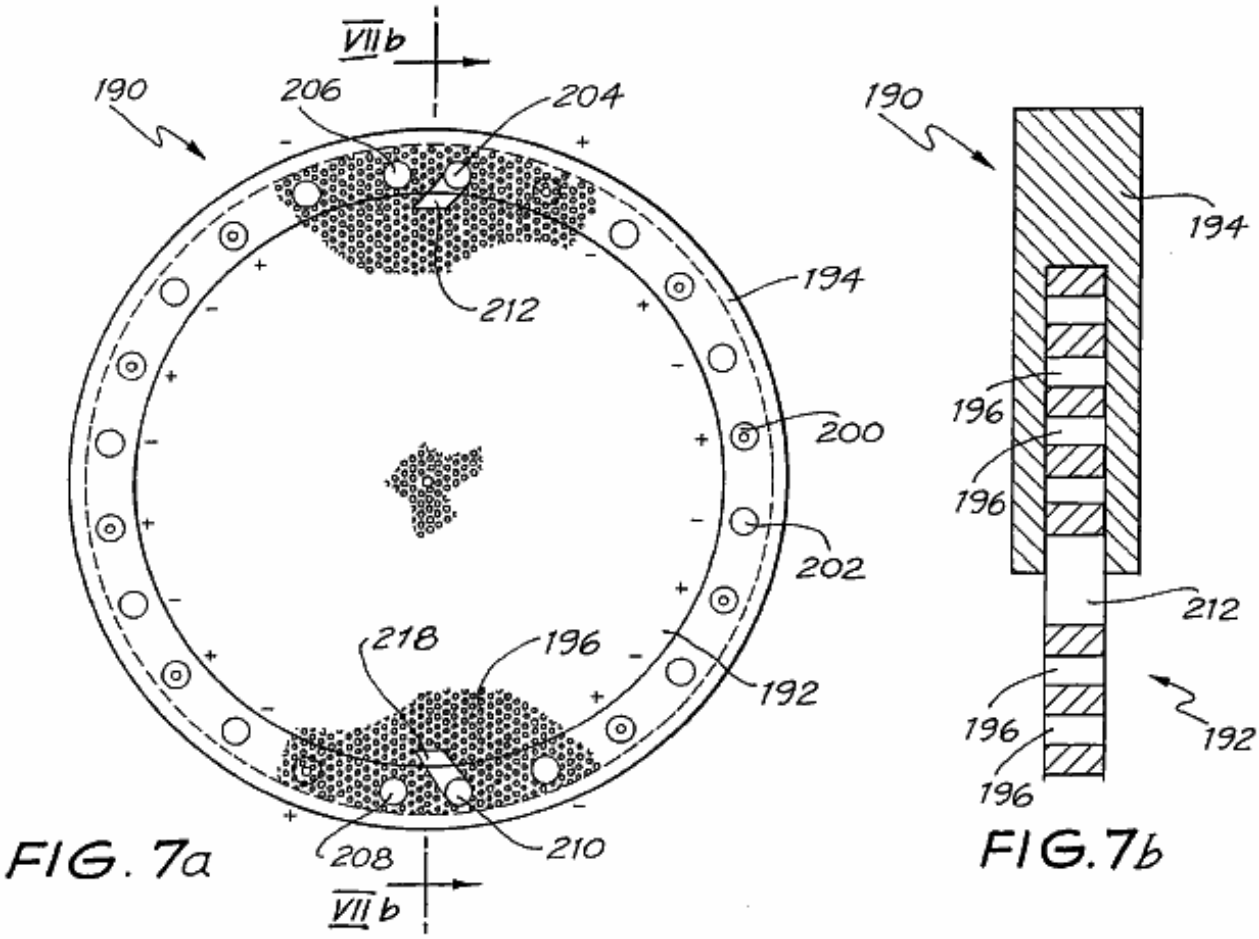

FIG. 7a

FIG. 7b

Fig.8A and **Fig.8B** are views of a second cell plate:

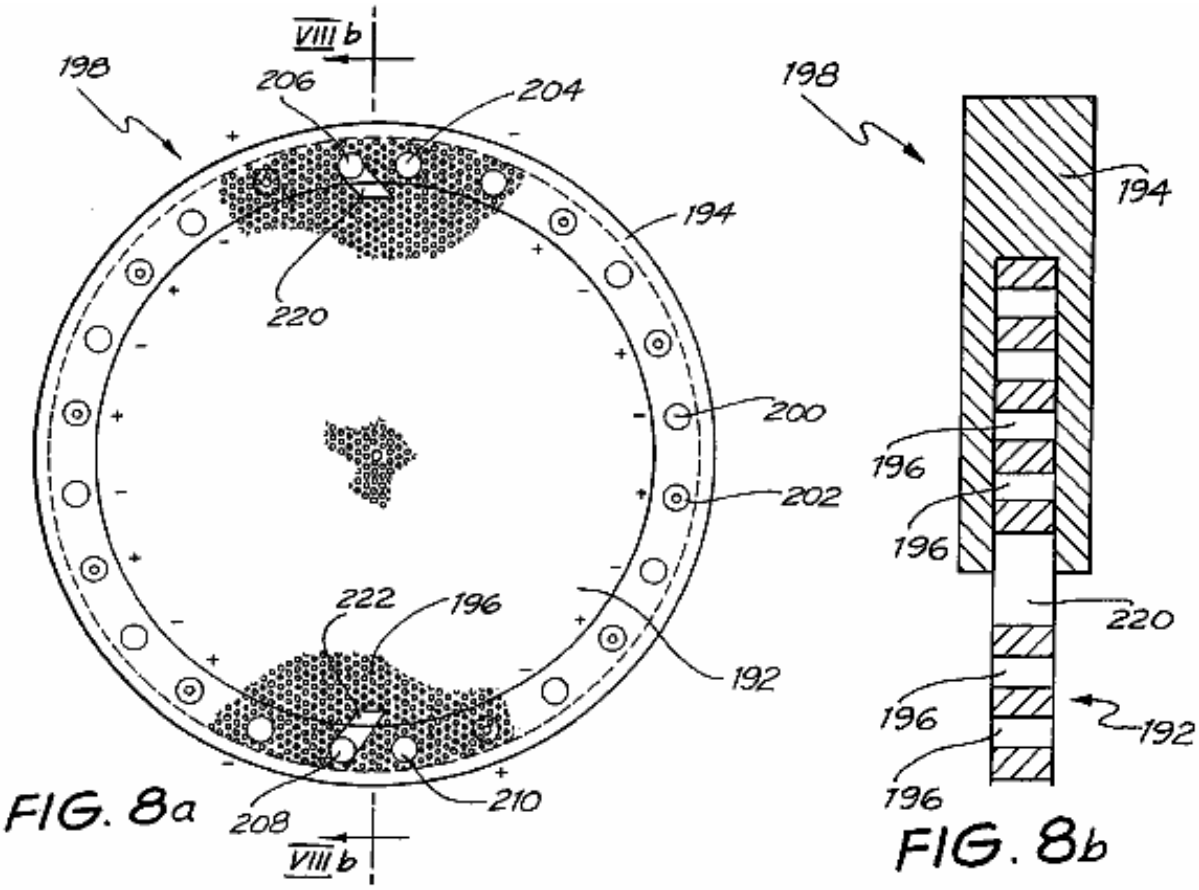

Fig.9 shows detail of the edge margin of the first cell plate:

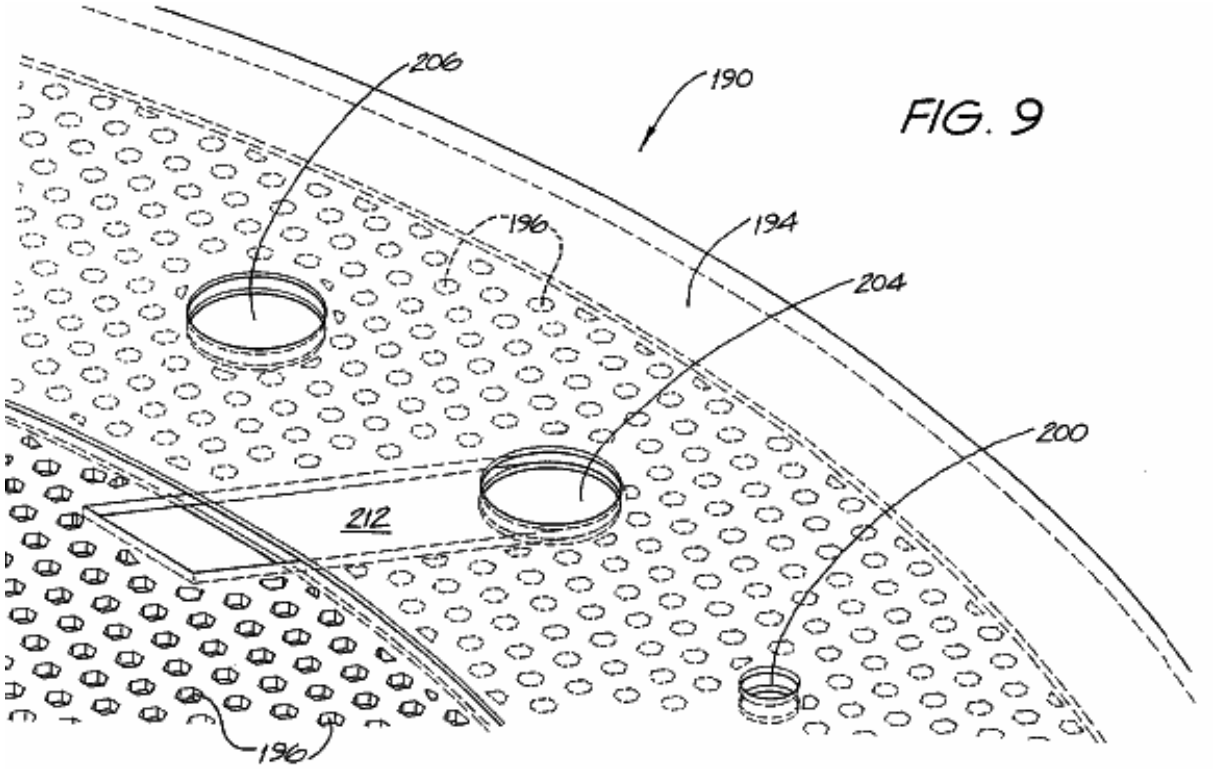

Fig10 shows an exploded stacked arrangement of the cell plates shown in Fig.7A and Fig.8A:

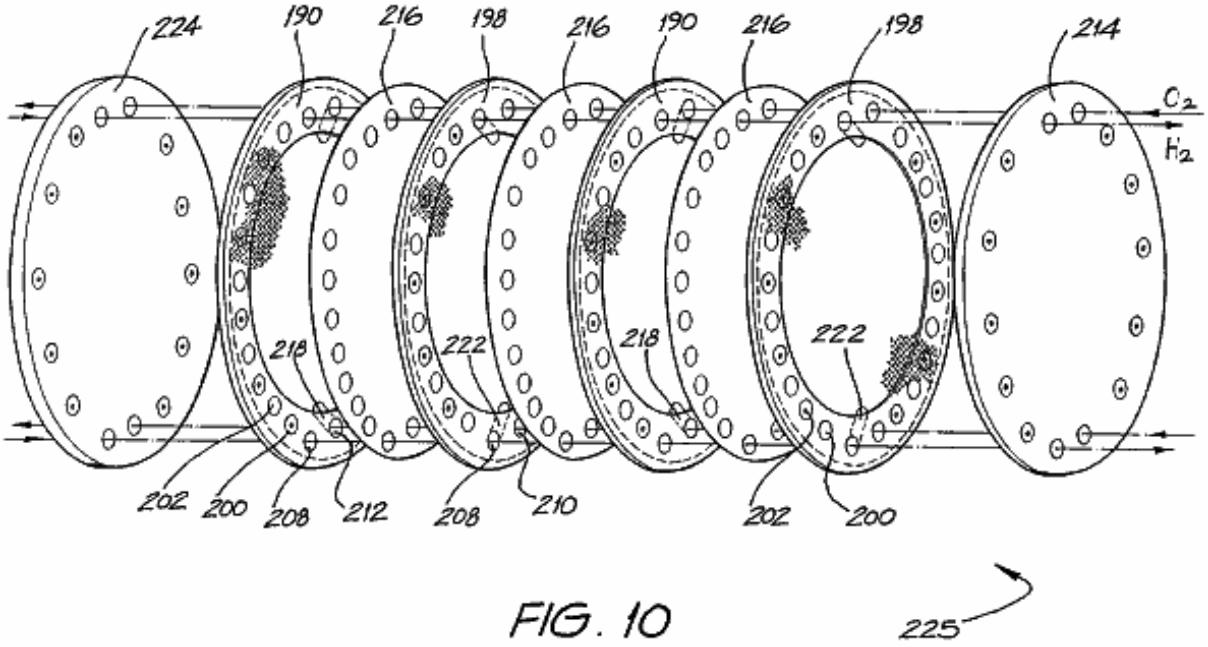

FIG. 10

Fig.11 is a cross-sectional view of three of the stacked cell plates shown in Fig.10 in the vicinity of a gas port:

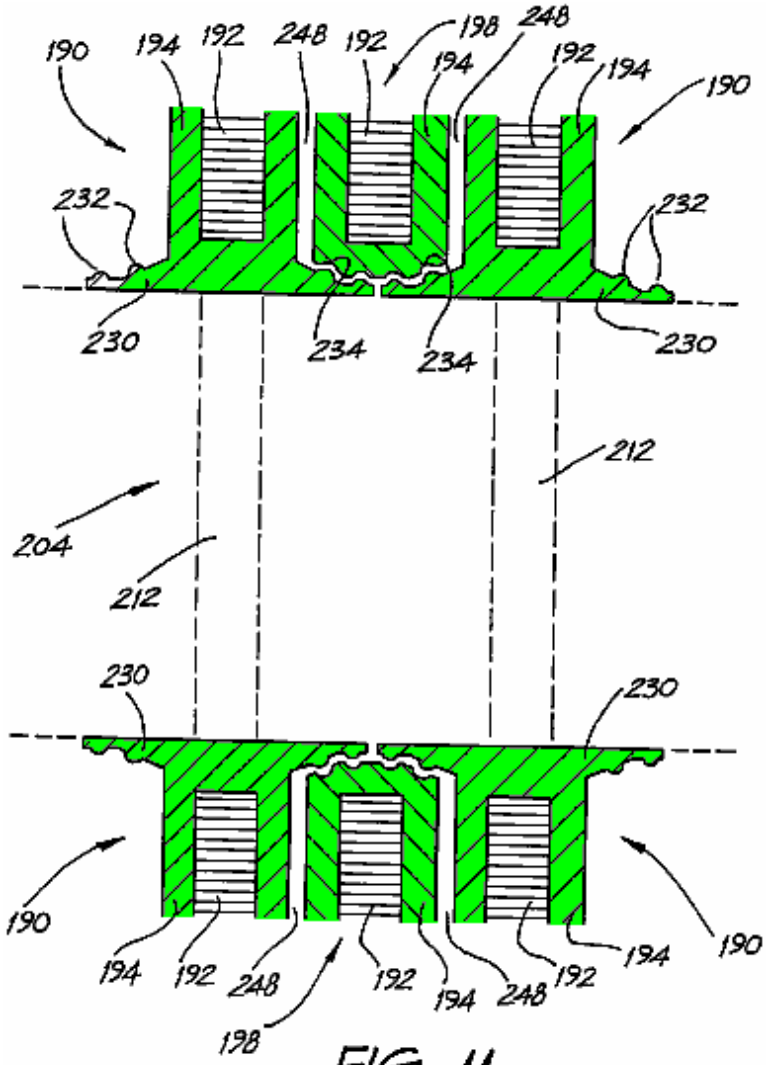

FIG. 11

Fig.12A and **Fig.12B** respectively show detail of the first and second cell plates in the vicinity of a gas port:

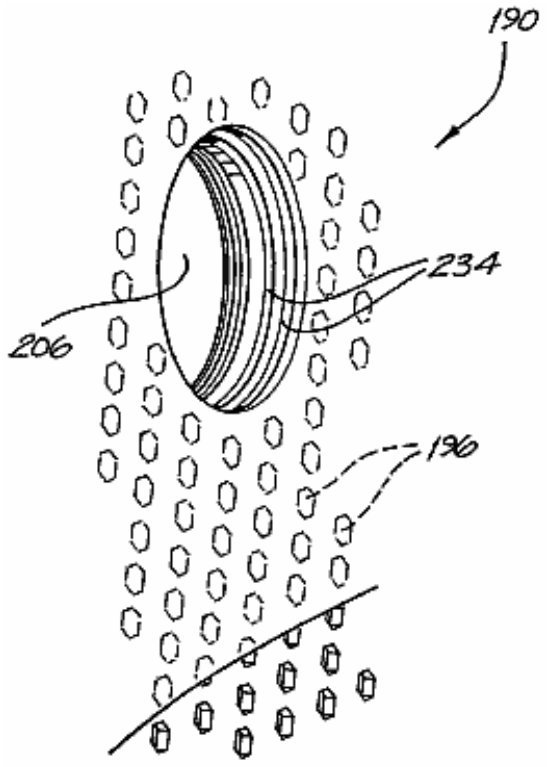

FIG. 12a

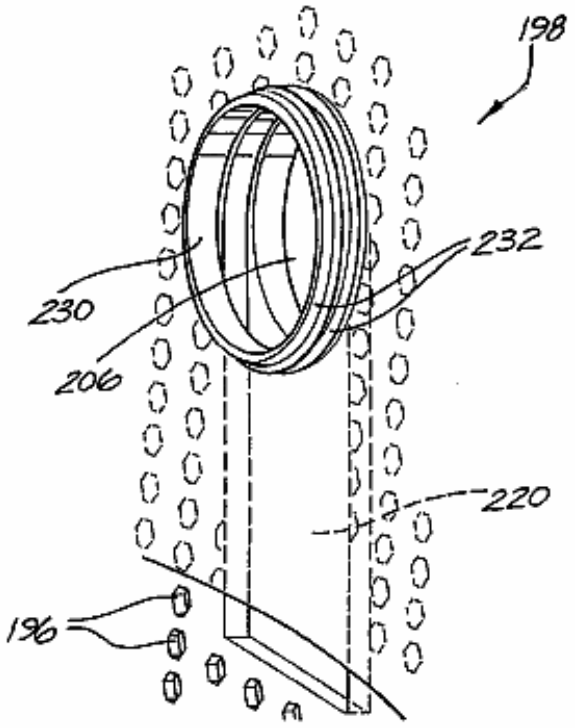

FIG. 12b

Fig.13 is a cross-sectional view of a cell unit of four stacked cell plates in the vicinity of an interconnecting shaft:

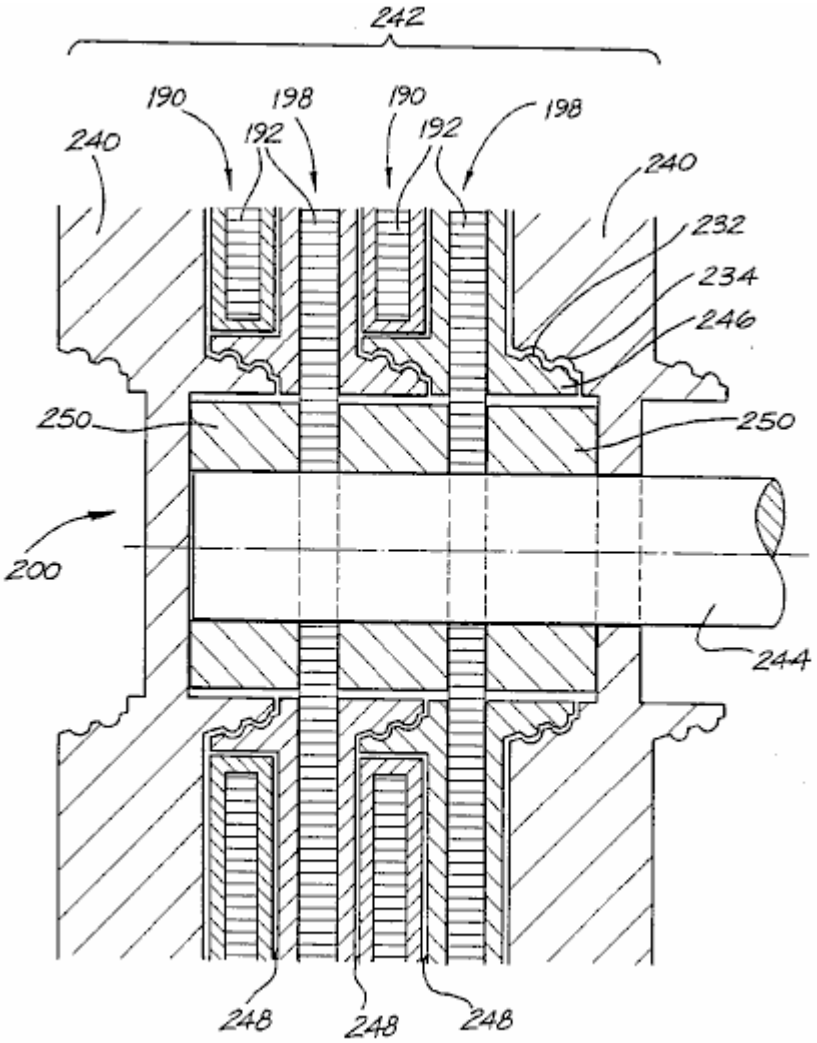

FIG. 13

Fig.14 shows a perspective view of a locking nut used in the arrangement of Fig.13:

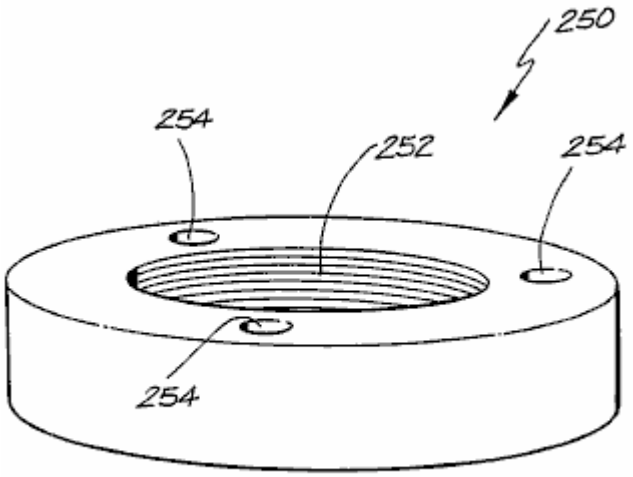

FIG. 14

Fig.15 shows an idealised electrolysis system:

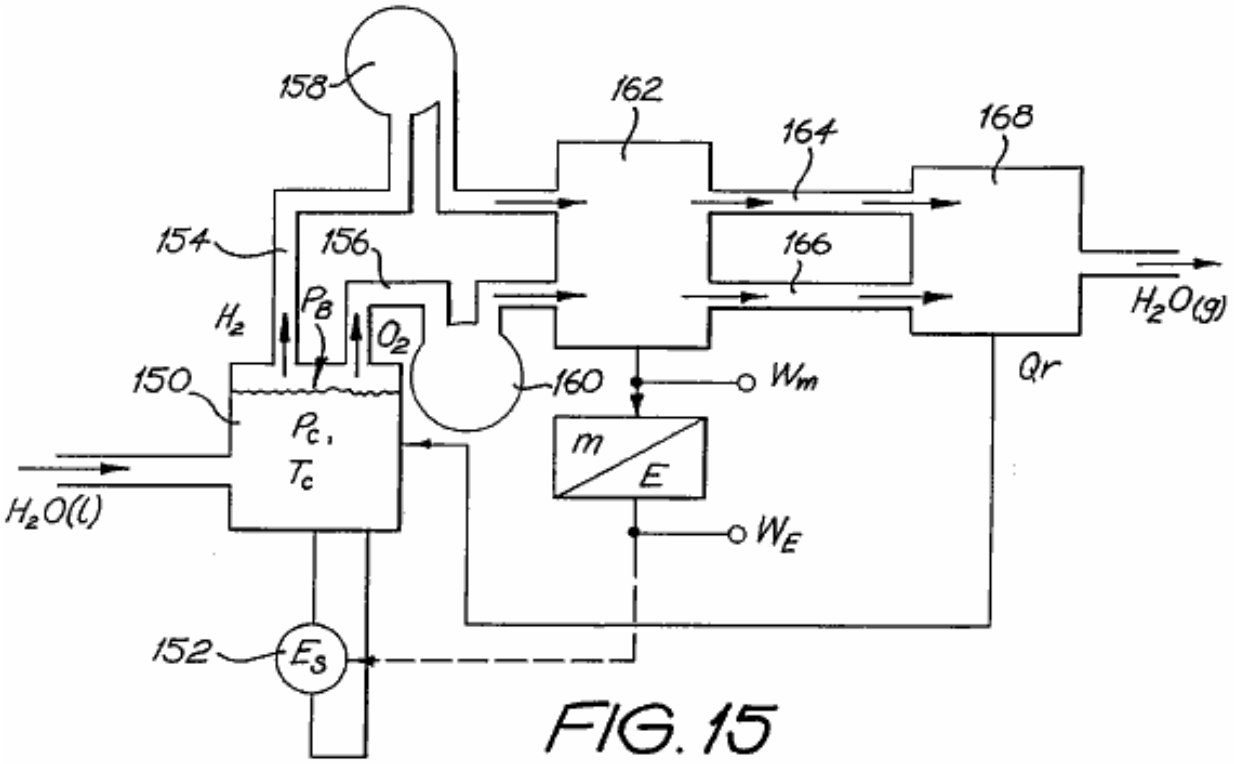

FIG. 15

Figs.16-30 are graphs supporting the system of **Fig.15** and the availability of over-unity energy:

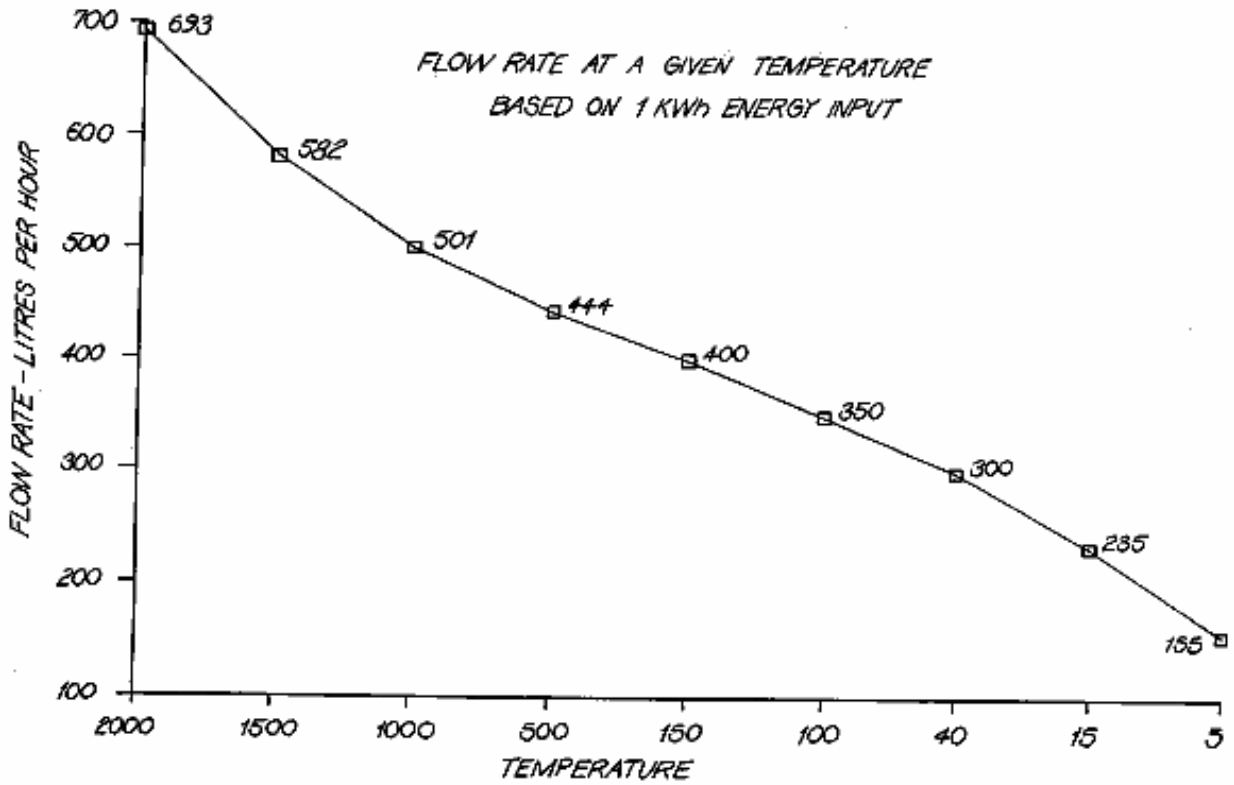

FIG. 16

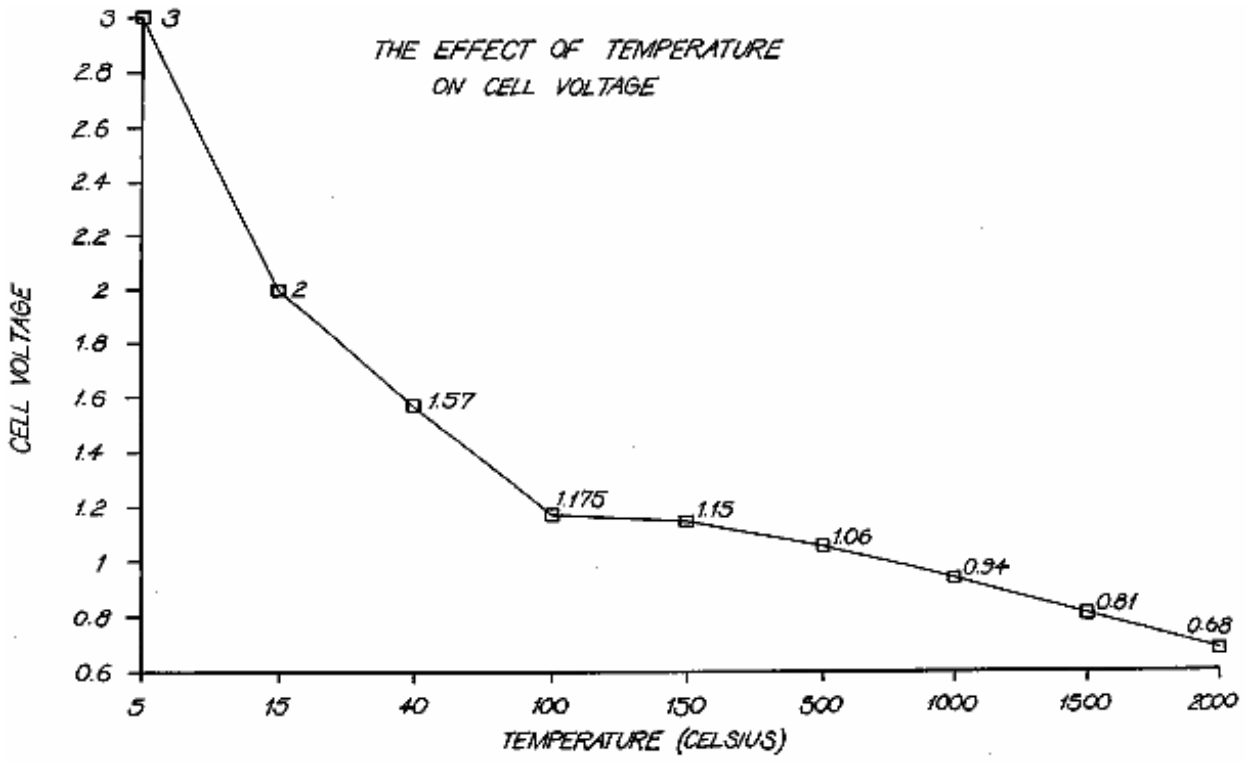
THE EFFECT OF TEMPERATURE
ON CELL VOLTAGE
CELL VOLTAGE
3
2.8
2.6
2.4
2.2
2
1.8
1.6
1.4
1.2
1
0.8
0.6
3
2
1.57
1.175
1.15
1.06
0.94
0.81
0.68
5
15
40
100
150
500
1000
1500
2000
TEMPERATURE (CELSIUS)

FIG. 17

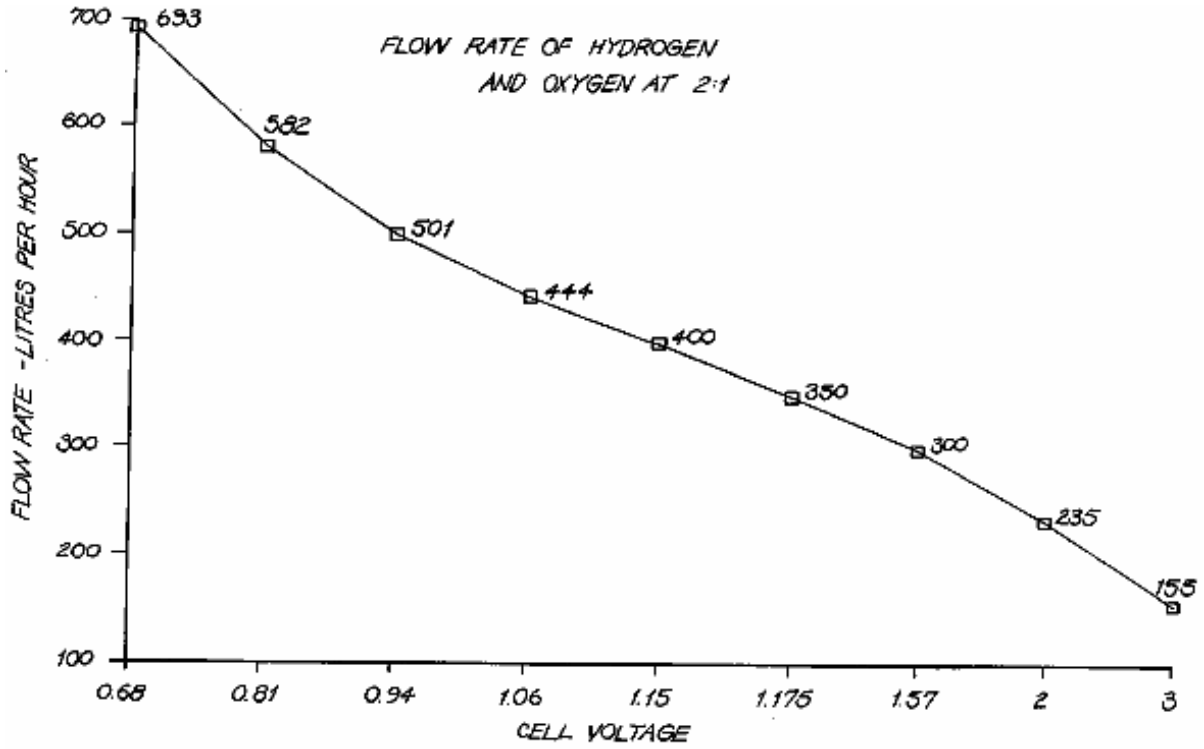
FLOW RATE OF HYDROGEN
AND OXYGEN AT 2:1
FLOW RATE - LITRES PER HOUR
700
600
500
400
300
200
100
693
582
501
444
400
350
300
235
155
0.68
0.81
0.94
1.06
1.15
1.175
1.57
2
3
CELL VOLTAGE

FIG. 18

TEST RUN	AMPS	VOLTS	TEMP C° (INITIAL)	TEMP C° (FINAL)	TIME (SECS.)	WATTS (A×V)	PRESSURE (psi)	FLOW RATE (lph)
1	47.2	38.5	40	-	-	1817.2	1 ATMOSPH.	-
2	54.3	34.4	-	70	222.13	1867.9	1 ATMOSPH.	89
3	65.2	34.4	40	70	26.37	2242.9	100-170	95
4	65.6	29.1	40	70	20.47	1909.0	300-410	97
5	62.9	29.4	40	70	22.93	1849.3	500-610	97
6	64.7	29.4	40	70	24.19	1902.2	700-850	98
7	63.9	29.2	40	70	24.13	1865.9	900-1050	98
8	64.0	29.3	40	70	22.37	1875.2	1100-1250	98
9	64.4	29.3	40	70	21.83	1886.9	1300-1450	98
10	63.7	29.1	40	70	23.34	1853.7	1500-1660	99
11	62.7	29.7	40	70	12.76	1862.2	1700-1890	100
12	61.9	29.9	40	70	11.17	1850.8	1900-1990	-
13	61.7	30.0	40	70	11.19	1851.0	2090-2170	-
14	60.7	30.6	40	70	15.71	1857.4	2290-2400	-
15	66.6	29.9	40	70	-	1991.3	2280-2420	-
16	61.7	30.0	45	70	-	1851.0	2270-2390	-
17	62.5	30.0	57	70	-	1875.0	2350-2380	-
18	62.0	30.1	59	70	-	1866.2	2350-2390	-
19	62.9	29.9	-	-	-	1880.7	2400-2420	-
20	63.0	29.4	-	-	-	1852.2	2430-2450	-

FIG. 19

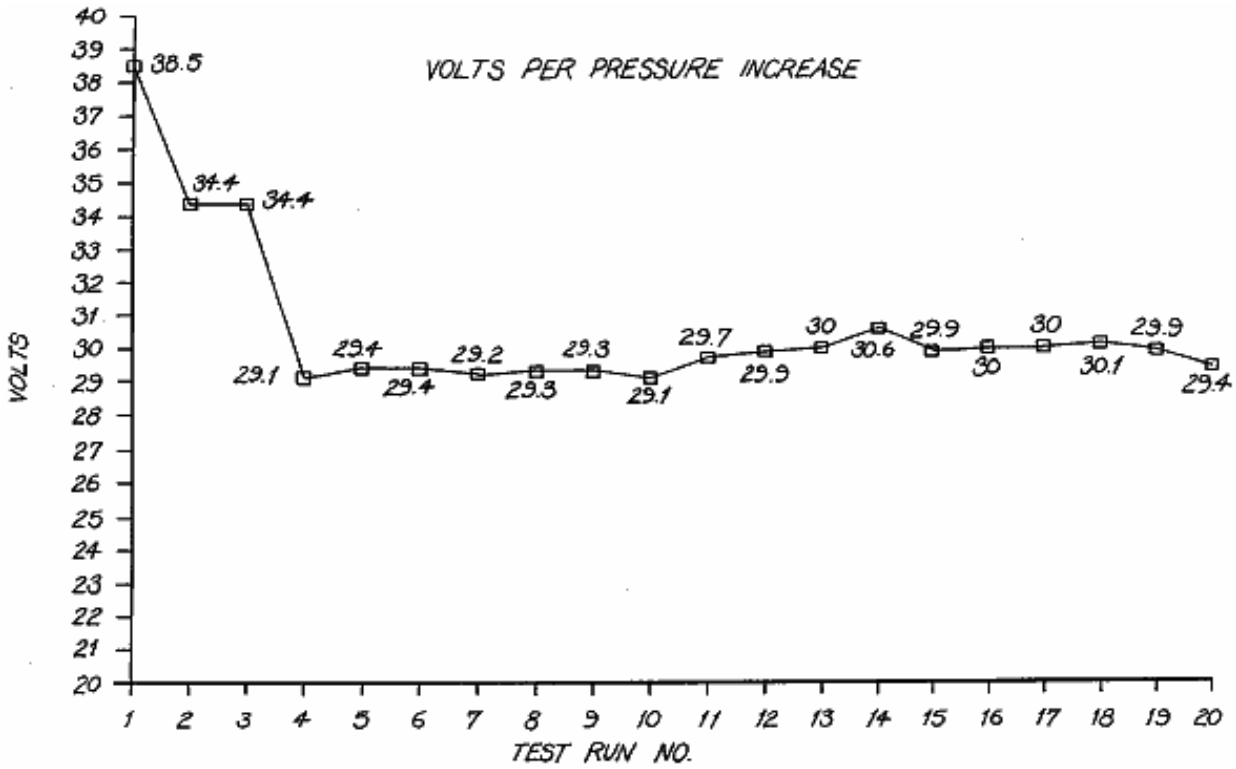

FIG. 20

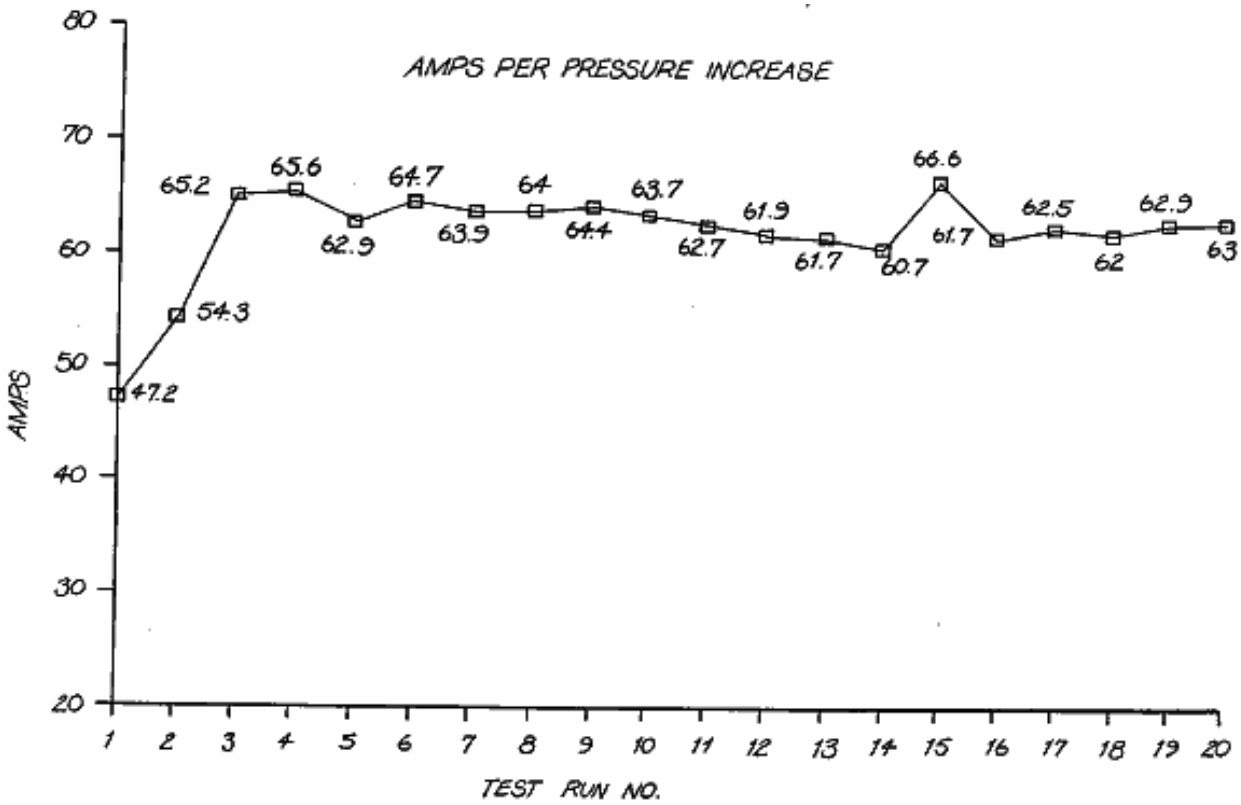
AMPS PER PRESSURE INCREASE
AMPS
TEST RUN NO.
80
70
60
50
40
30
20
1 2 3 4 5 6 7 8 9 10 11 12 13 14 15 16 17 18 19 20
47.2
54.3
65.2
65.6
62.9
64.7
63.9
64
64.4
63.7
62.7
61.9
61.7
60.7
66.6
61.7
62.5
62
62.9
63

FIG. 21

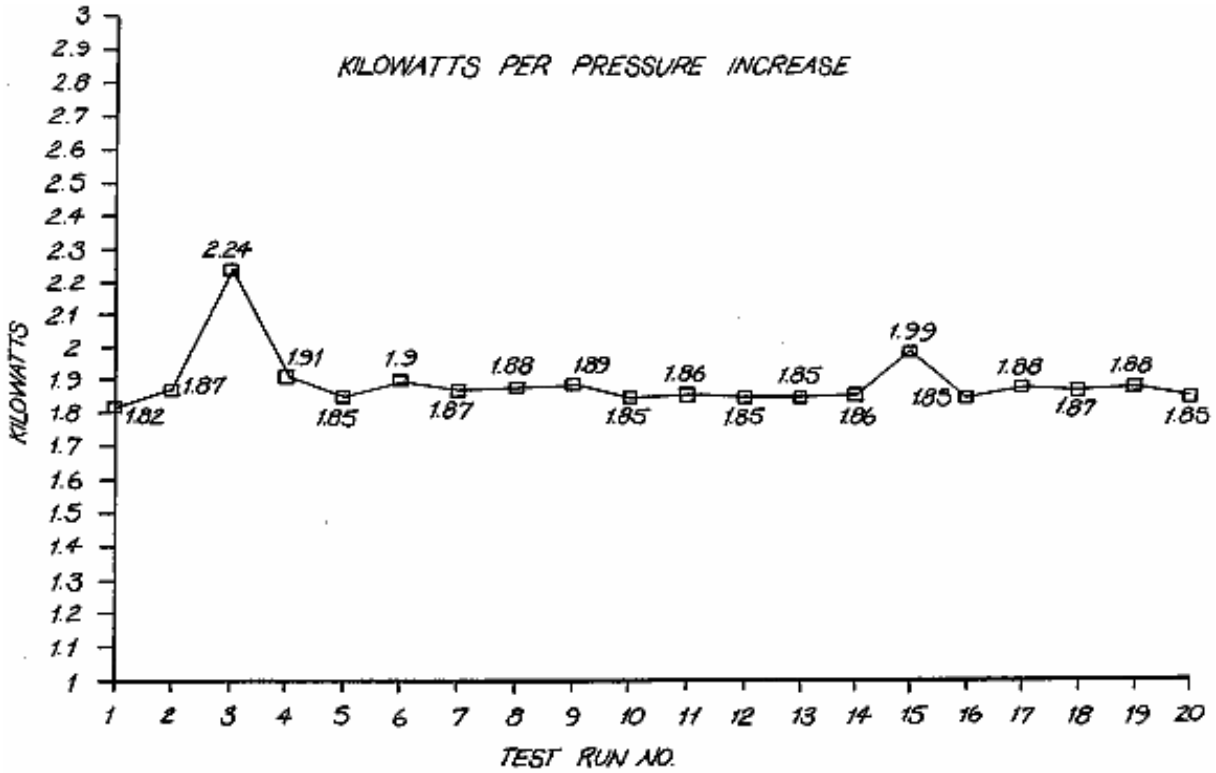
KILOWATTS PER PRESSURE INCREASE
KILOWATTS
TEST RUN NO.
3
2.9
2.8
2.7
2.6
2.5
2.4
2.3
2.2
2.1
2
1.9
1.8
1.7
1.6
1.5
1.4
1.3
1.2
1.1
1
1 2 3 4 5 6 7 8 9 10 11 12 13 14 15 16 17 18 19 20
1.82
1.87
2.24
1.91
1.85
1.9
1.87
1.88
1.89
1.85
1.86
1.85
1.85
1.86
1.99
1.85
1.88
1.87
1.88
1.85

FIG. 22

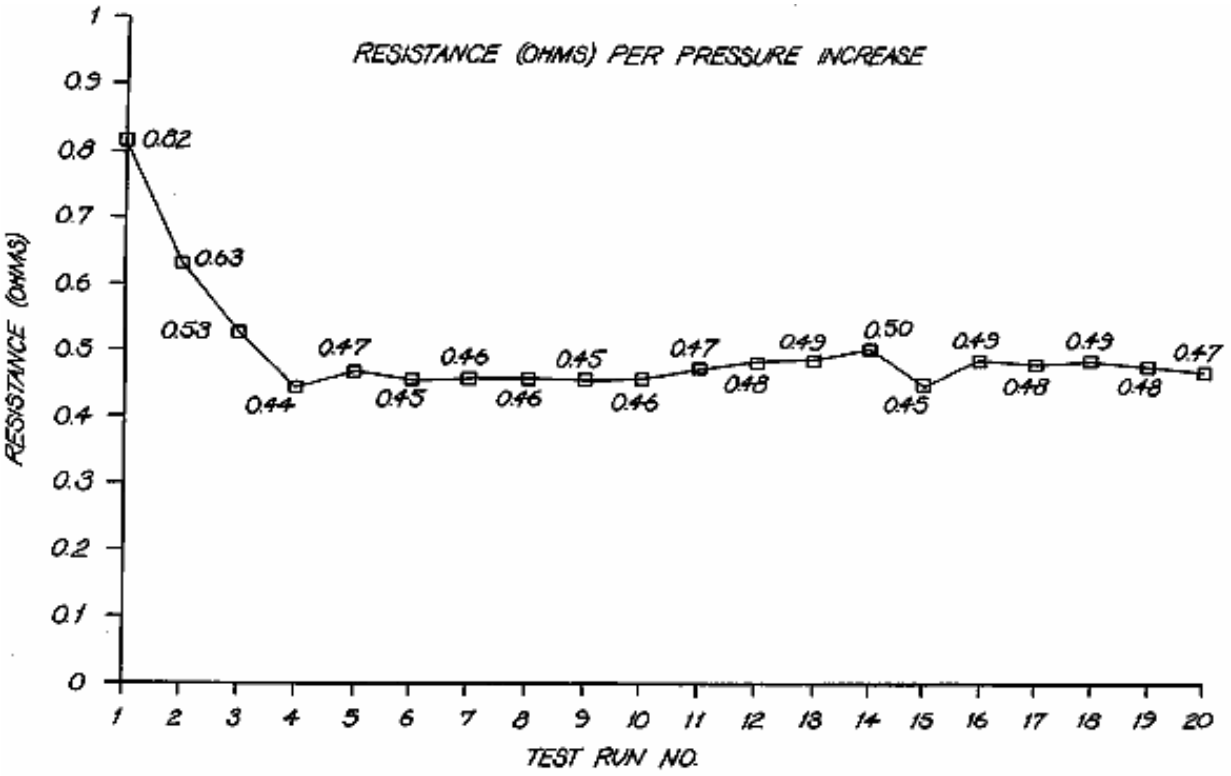
RESISTANCE (OHMS) PER PRESSURE INCREASE
RESISTANCE (OHMS)
TEST RUN NO.
0.82
0.63
0.53
0.44
0.47
0.45
0.46
0.46
0.45
0.46
0.47
0.48
0.49
0.50
0.45
0.49
0.48
0.49
0.48
0.47

FIG.23

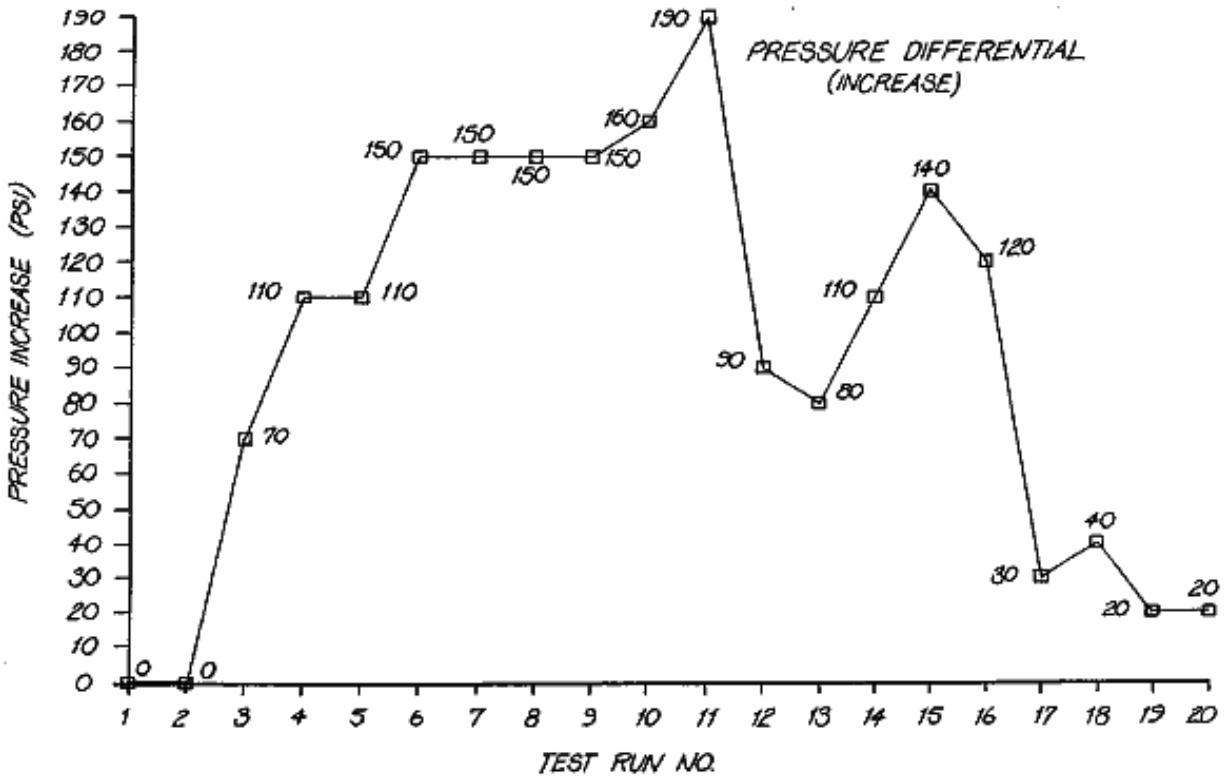
PRESSURE DIFFERENTIAL
(INCREASE)
PRESSURE INCREASE (PSI)
TEST RUN NO.
0
0
70
110
110
150
150
150
150
160
190
90
80
110
140
120
30
40
20
20

FIG.24

FLOW RATE ANALYSIS PER PRESSURE INCREASE

RUN	VOLTS	AMPS	TEMP C°	TIME-SECS	VOLUME (LITRES)	LPH	PRESSURE PSI
1	27.5	49.7	70	114.0	2.8	88	14.7
2	34.4	54.3	70	222.13	5.49	89	14.7
3	20.5	51.9	87	190.0	4.7	89	50
4	20	55	80	33.0	1.0	109	170
5	34.4	65.2	70	26.37	0.69	95	200
6	29.1	65.6	70	20.47	0.55	97	410
7	29.4	62.9	70	22.93	0.62	97	610
8	29.4	64.7	70	24.19	0.66	98	850
9	29.2	63.9	70	24.13	0.66	98	1050
10	29.3	64.0	70	22.37	0.61	98	1250
11	29.3	64.4	70	21.83	0.59	98	1450
12	29.1	63.7	70	23.34	0.64	99	1660
13	29.7	62.7	70	12.76	0.35	100	1890

FIG. 25

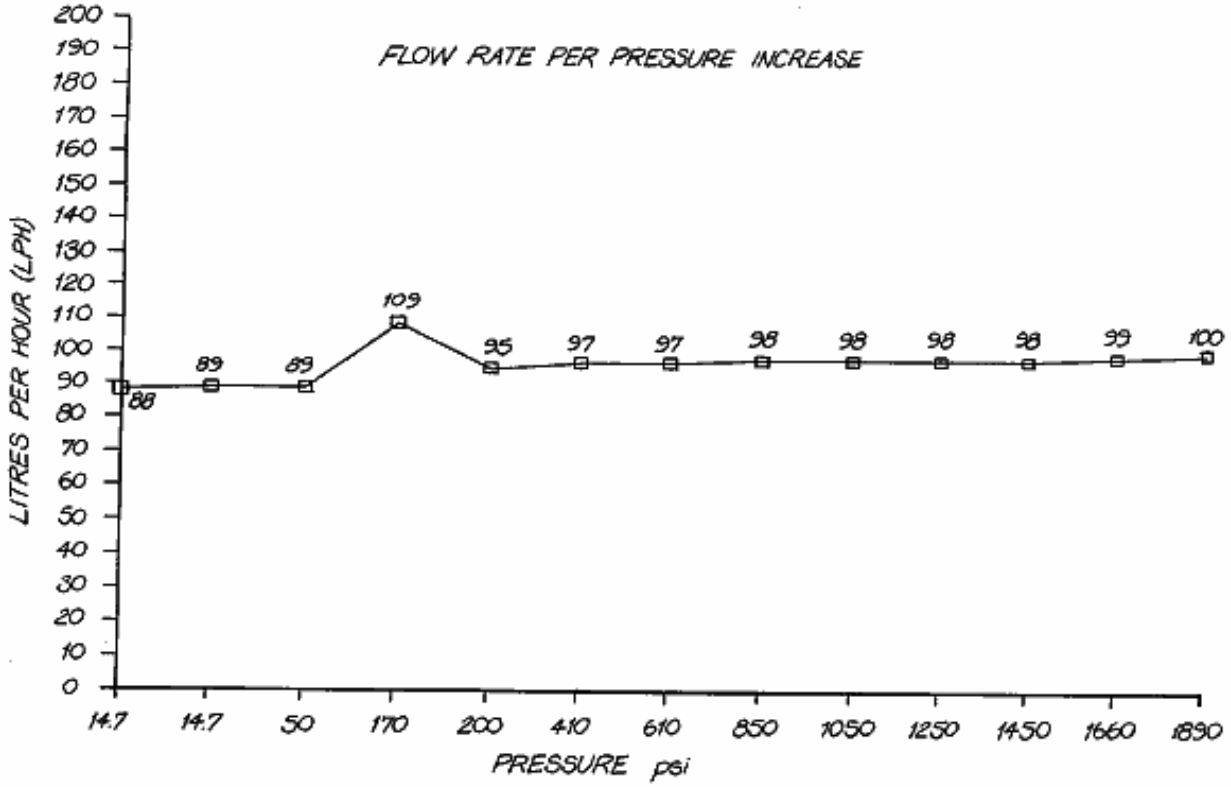

FIG. 26

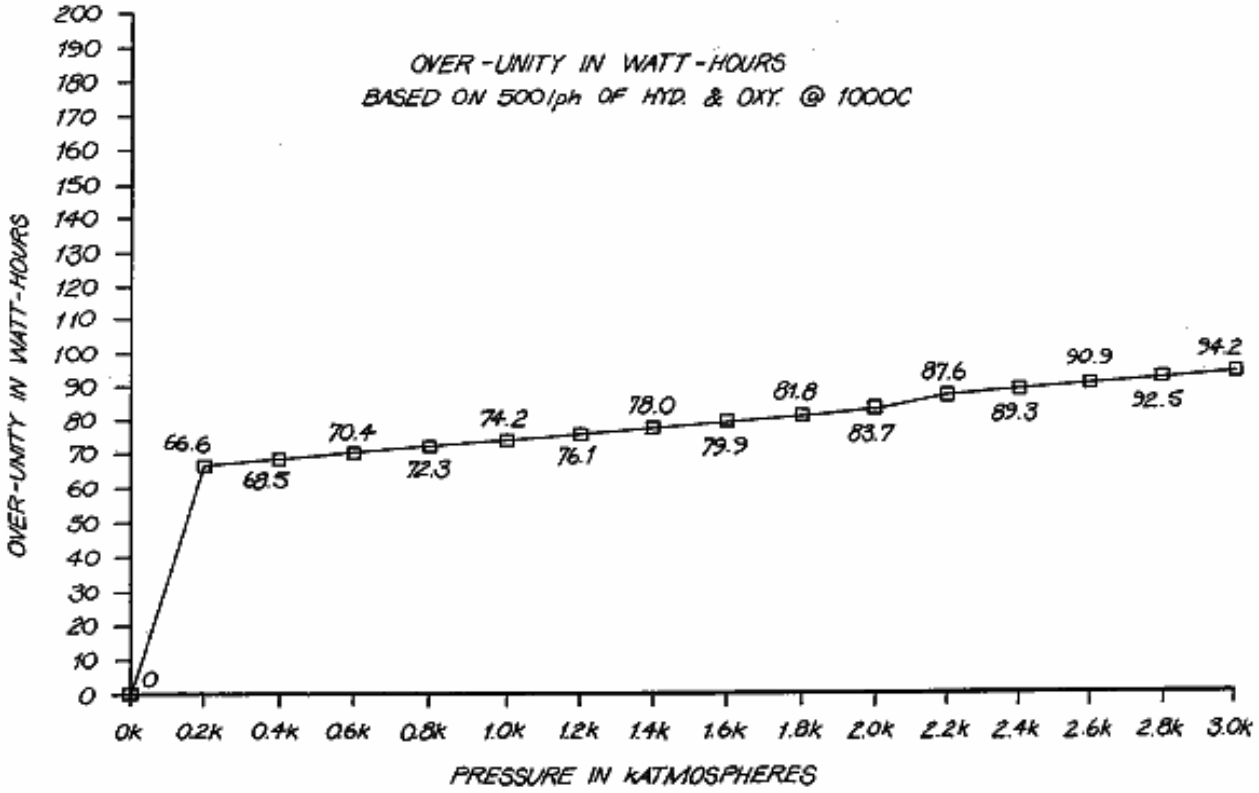
OVER-UNITY IN WATT-HOURS
BASED ON 500lph OF HYD. & OXY. @ 1000C
OVER-UNITY IN WATT-HOURS
PRESSURE IN kATMOSPHERES
0
66.6
68.5
70.4
72.3
74.2
76.1
78.0
79.9
81.8
83.7
87.6
89.3
90.9
92.5
94.2
0k
0.2k
0.4k
0.6k
0.8k
1.0k
1.2k
1.4k
1.6k
1.8k
2.0k
2.2k
2.4k
2.6k
2.8k
3.0k

FIG.27

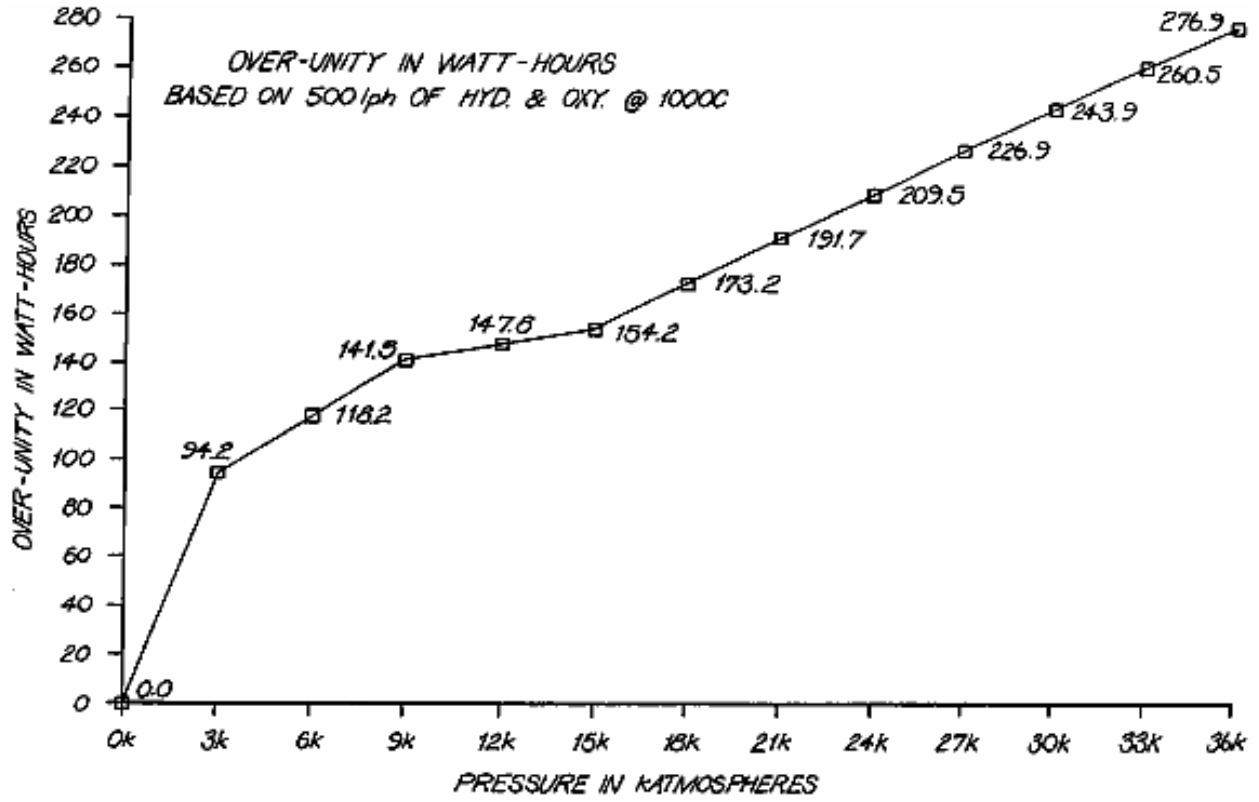
OVER-UNITY IN WATT-HOURS
BASED ON 500lph OF HYD. & OXY. @ 1000C
OVER-UNITY IN WATT-HOURS
PRESSURE IN kATMOSPHERES
0.0
94.2
118.2
141.5
147.6
154.2
173.2
191.7
209.5
226.9
243.9
260.5
276.9
0k
3k
6k
9k
12k
15k
18k
21k
24k
27k
30k
33k
36k

FIG.28

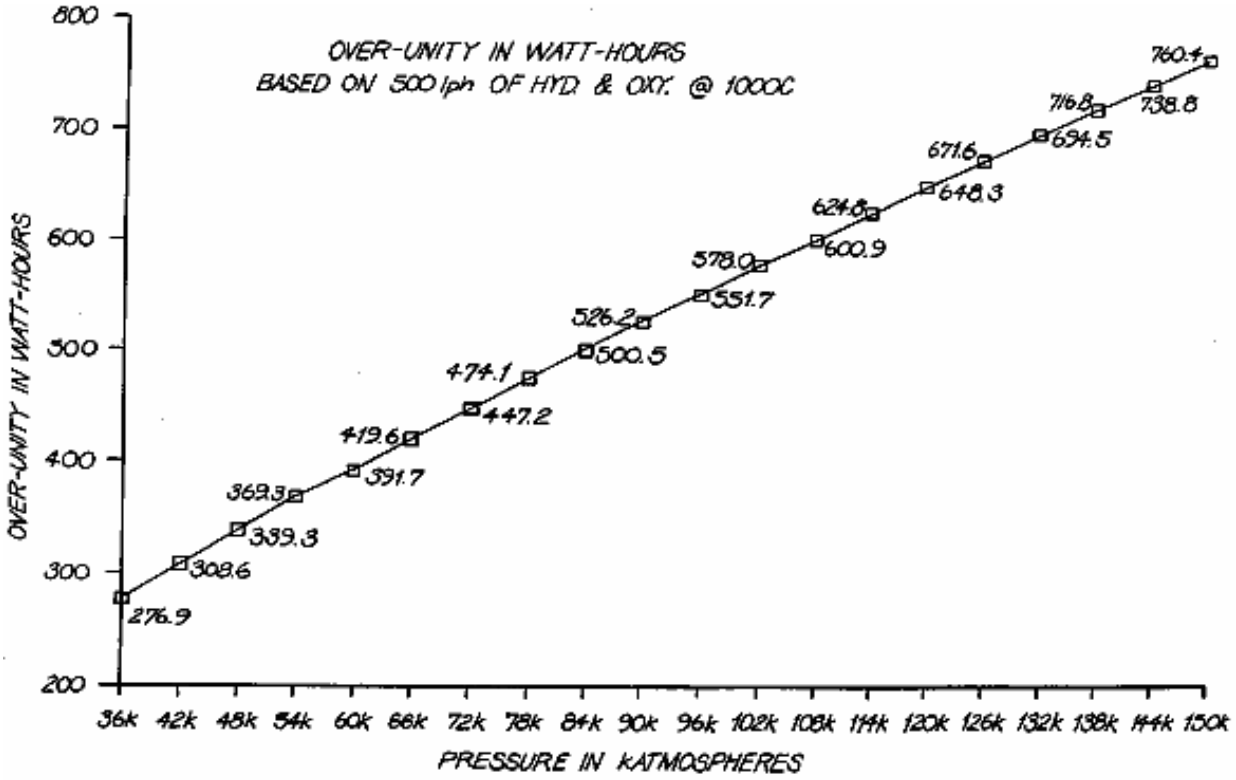

FIG. 29

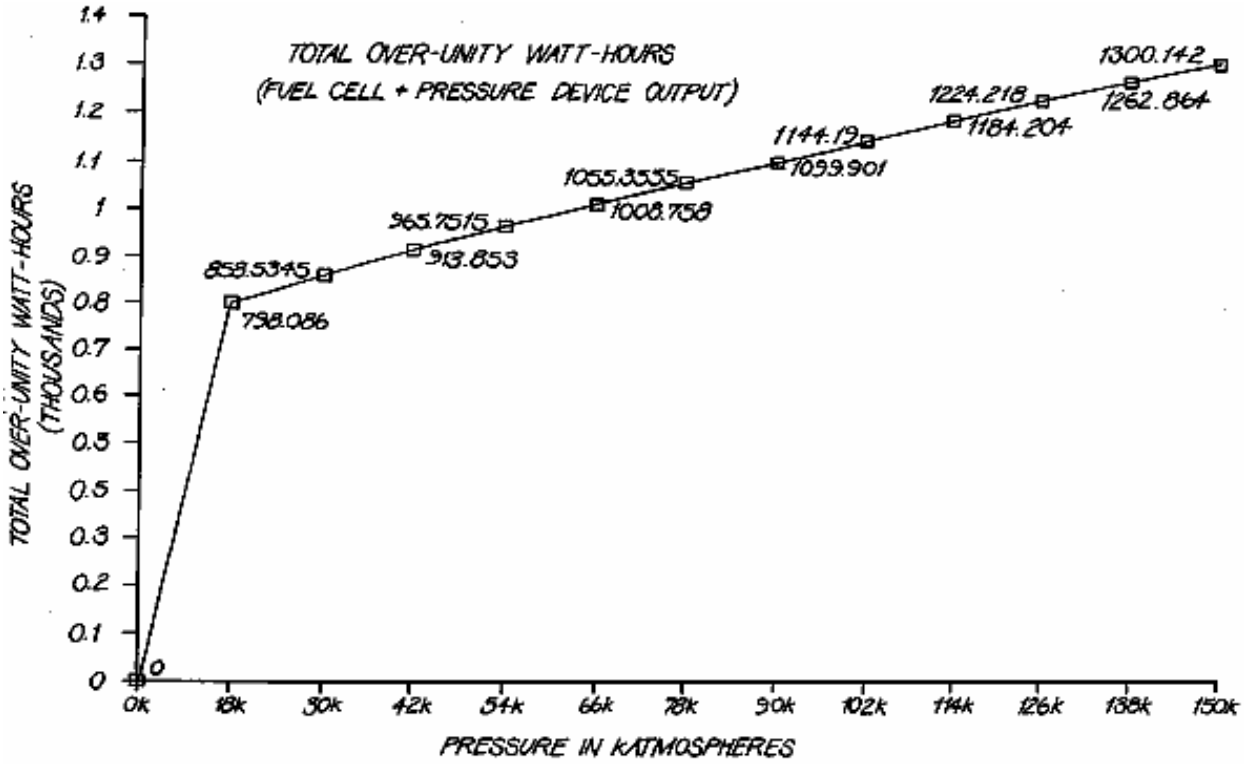

FIG. 30

Figs. 31a to 31e show a hydrogen/oxygen gas-driven internal combustion engine:

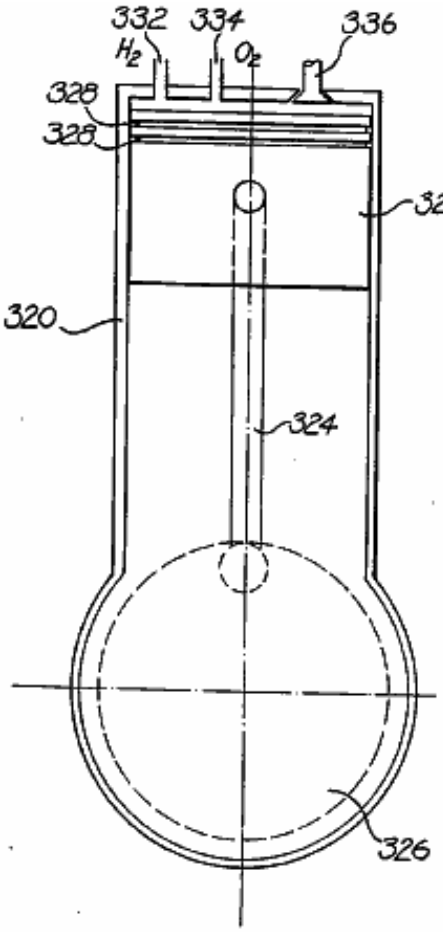

FIG. 31a

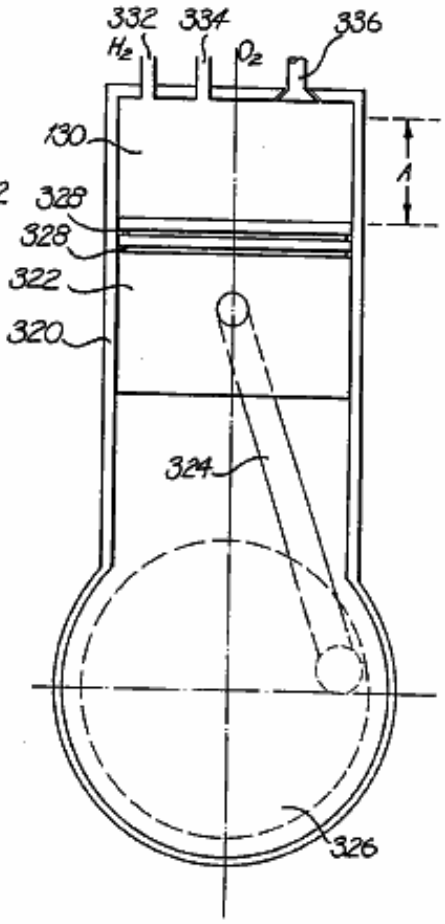

FIG. 31b

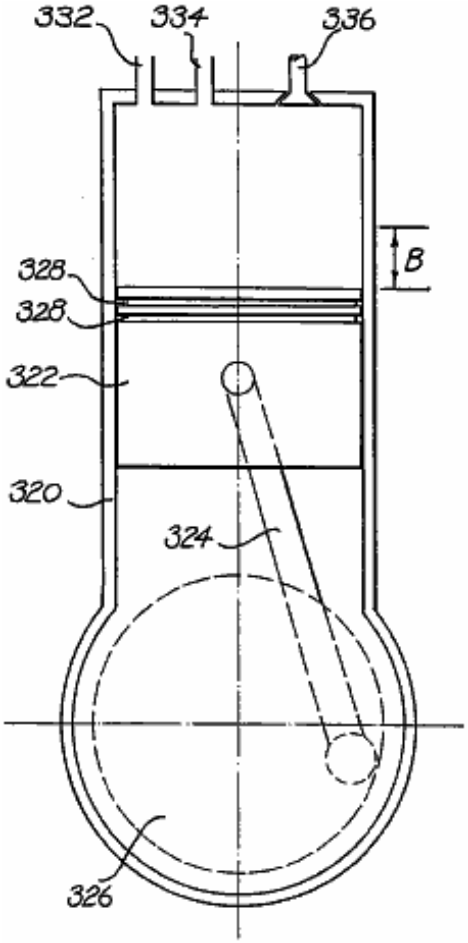

FIG. 31c

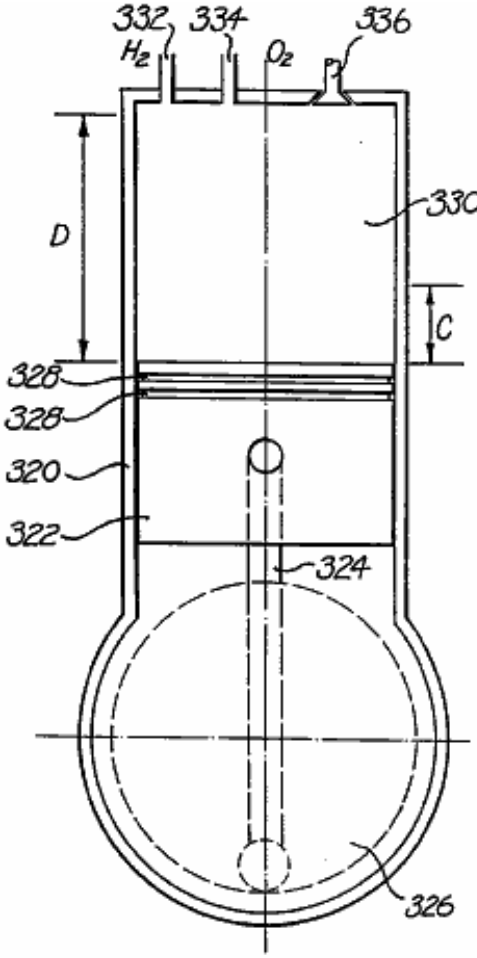

FIG. 31d

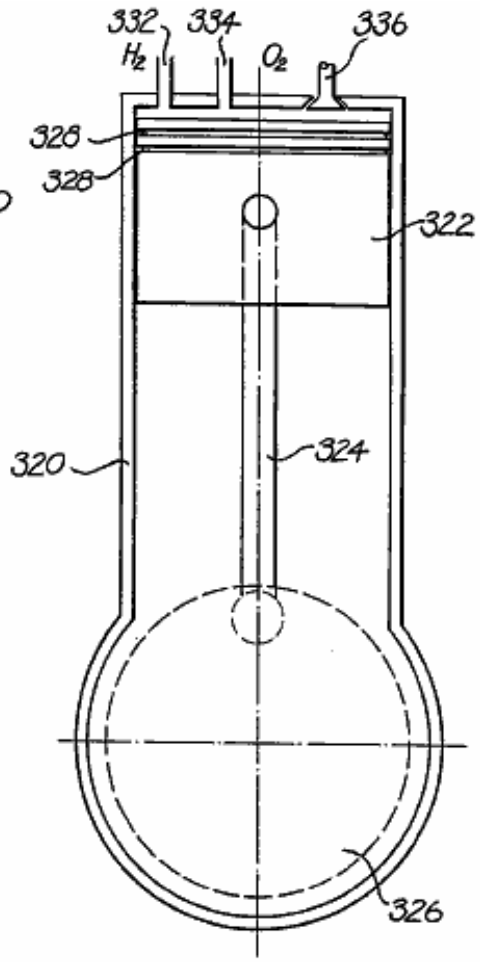

FIG. 31e

Figs. 32a-32c show a gas-driven implosion pump:

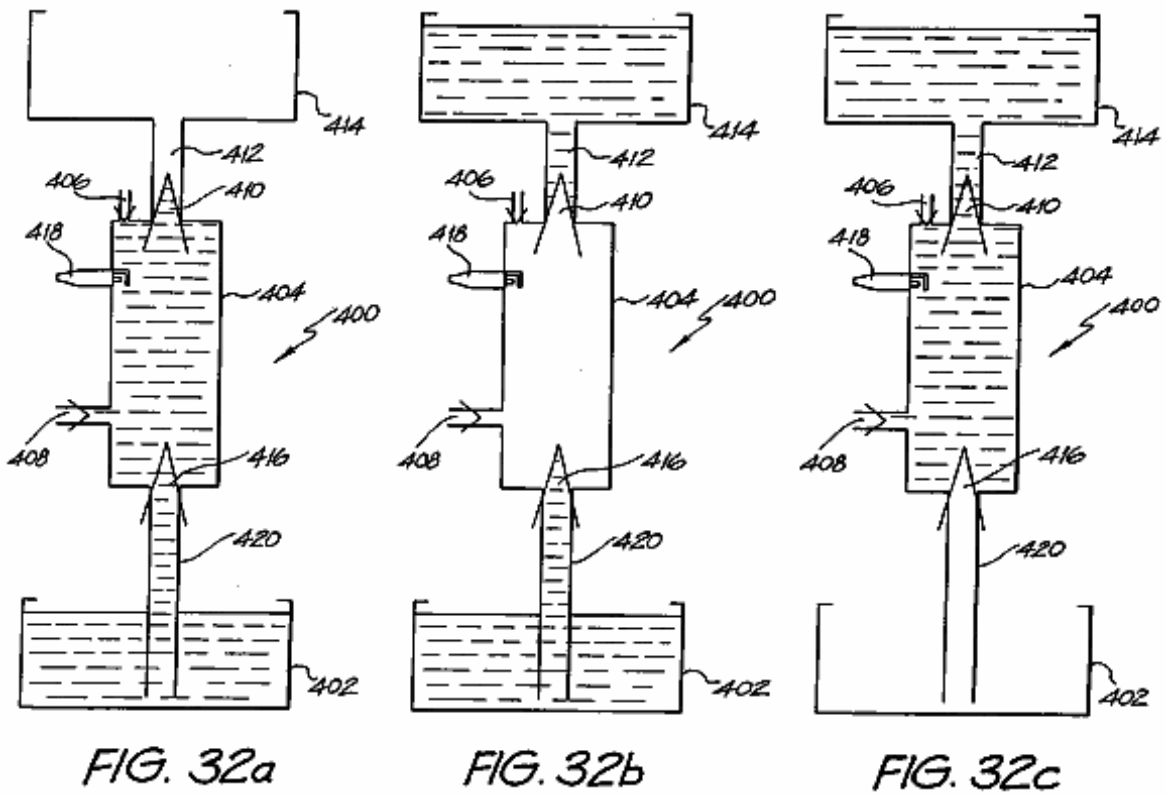

DETAILED DESCRIPTION AND BEST MODE OF PERFORMANCE

Fig.IA and **Fig.2A** show embodiments of a first and second type of cell plate **90, 98** as an end view. **Fig.1B** and **Fig.2B** are partial cross-sectional views along the respective mid-lines as shown. Common reference numerals have been used where appropriate. The plates **90, 98** can have the function of either an anode (+) or a cathode (-), as will become apparent. Each comprises an electrode disc **92** which is perforated with hexagonally shaped holes **96**. The disc **92** is made from steel or resin-bonded carbon or conductive polymer material. The disc **92** is housed in a circular rim or sleeve **94**. The function of the perforations **96** is to maximise the surface area of the electrode disc **92** and minimise the weight over solid constructions by 45%.

By way of example, for a disc of diameter 280 mm, the thickness of the disc must be 1 mm in order to allow the current density (which ranges from 90 A / 2,650 cm2 - 100 A / 2,940 cm2 of the anode or cathode) to be optimal. If the diameter of the plate is increased, which consequently increases the surface area, it is necessary to increase the thickness of the plate in order to maintain uniformity of conductance for the desired current density.

The hexagonal perforations in a 1 mm disc have a distance of 2 mm between the flats, twice the thickness of the plate in order to maintain the same total surface area prior to perforation, and be 1 mm away from the next adjacent perforation to allow the current density to be optimal. A (flat-to-flat) distance of 1 mm between the hexagonal perforations is required, because a smaller distance will result in thermal losses and a larger distance will add to the overall weight of the plate.

The sleeve **94** is constructed of PVC material and incorporates a number of equally spaced shaft holes **100,102**. The holes are for the passage of interconnecting shafts provided in a stacked arrangement of the plates **90, 98** forming the common conductor for the respective anode and cathode plates. The further two upper holes **104,106** each support a conduit respectively for the out-flow of oxygen and hydrogen gases. The further holes **108,110** at the bottom of the sleeve **94** are provided for the inlet of water and electrolyte to the respective cell plates **90, 98**.

Fig.3 shows an enlarged view of a portion of the cell plate **90** shown in **Fig.IA**. The port hole **104** is connected to the hexagonal perforations **96** within the sleeve **94** by an internal channel **112**. A similar arrangement is in place for the other port hole **106**, and for the water/electrolyte supply holes **108, 110**.

If it is the case that the hydrogen and oxygen gases liberated are to be kept separate (i.e. not to be formed as an admixture), then it is necessary to separate those gases as they are produced. In the prior art this is achieved by use of diaphragms which block the passage of gases and effectively isolate the water/electrolyte on each side of the diaphragm. Ionic transfer thus is facilitated by the conductive nature of the diaphragm material (i.e. a water - diaphragm - water path). This results in an increase in the ionic resistance and hence a reduction in efficiency.

Fig.4 shows an exploded stacked arrangement of four cell plates, being an alternative stacking of two (anode) cell plates **90** and two (cathode) cell plates **98**. The two ends of the stacked arrangement of cell plates delineates a single cell unit **125**.

Interposed between each adjacent cell plate **90, 98** is a PTFE separation **116**. Although not shown in **Fig.4**, the cell unit includes separate hydrogen and oxygen gas conduits that respectively pass through the stacked arrangement of cell plates via the port holes **106, 104** respectively. In a similar way, conduits are provided for the supply of water/electrolyte, respectively passing through the holes **108, 110** at the bottom of the respective plates **90, 98**. Only two pairs of anode/cathode cell plates are shown. The number of such plates can be greatly increased per cell unit **125**.

Also not shown are the interconnecting conductive shafts that electrically interconnect alternative common cell plates. The reason for having a large diameter hole in one cell plate adjacent to a smaller diameter hole in the next cell plate, is so that an interconnecting shaft will pass through the larger diameter hole, and not make an electrical connection (i.e. insulated with PVC tubing) rather only forming an electrical connection between alternate (common) cell plates.

Fig.4 is an exploded view of one cell unit **125** arrangement. When fully constructed, all the elements are stacked in intimate contact. Mechanical fastening is achieved by use of one of two adhesives such as (a) "PUR-FECT LOK" (TM) 34-9002, which is a Urethane Reactive Hot Melt adhesive with a main ingredient of Methylene Bispheny/Dirsocynate (MDI), and (b) "MY-T-BOND" (TM) which is a PVC solvent based adhesive. Both adhesives are Sodium Hydroxide resistant, which is necessary because the electrolyte contains 20% Sodium Hydroxide. In that case the water/electrolyte only resides within the area contained within the cell plate sleeve **94**. Thus the only path for the inlet of water/electrolyte is by bottom channels **118, 122** and the only outlet for the gases is by the top channels **112, 120**. In a system constructed and tested by the inventor, the thickness of the cell plates **90, 98** is 1 mm (2 mm on the rim because of the PVC sleeve **94**), with a diameter of 336 mm. The cell unit **125** is segmented from the next cell by an insulating PVC segmentation disc **114**. A segmentation disc **114** is also placed at the beginning and end of the entire cell bank. If there is to be no separation of the liberated gases, then the PTFE membranes **116** are omitted and sleeve **94** is not required.

The PTFE membrane **116** is fibrous and has 0.2 to 1.0 micron interstices. A suitable type is type Catalogue Code J, supplied by Tokyo Roshi International Inc (Advantec). The water/electrolyte fills the interstices and ionic current flows only via the water - there is no contribution of ionic flow through the PTFE material itself. This leads to a reduction in the resistance to ionic flow. The PTFE material also has a 'bubble point' that is a function of pressure, hence by controlling the relative pressures at either side of the PTFE separation sheets, the gases can be 'forced' through the interstices to form an admixture, or otherwise kept separate. Other advantages of this arrangement include a lesser cost of construction, improved operational efficiency and greater resistance to faults.

Fig.5A is a stylised, and exploded, schematic view of a linear array of three series-connected cell units **125**. For clarity, only six interconnecting shafts **126-131** are shown. The shafts **126-131** pass through the respective shaft holes **102,100** in the various cell plates **90,98** in the stacked arrangement. The polarity attached to each of the exposed end shafts, to which the DC supply is connected also is indicated. The shafts **126-131** do not run the full length of the three cell banks **125**. The representation is similar to the arrangement shown in **Fig.7A** and **Fig.8**. One third the full DC source voltage appears across each anode/cathode cell plate pair **90,98**.

Further, the gas conduits **132,133**, respectively for hydrogen and oxygen, that pass through the port holes **104,106** in the cell plates **90,98** also are shown. In a similar way, water/electrolyte conduits **134,135**, passing through the water port holes **108,110** in the cell plates also are shown.

Fig.5B particularly shows how the relative potential difference in the middle cell bank **125** changes. That is, the plate electrode **90a** now functions as a cathode (i.e. relatively more negative) to generate hydrogen, and the plate electrode **98a** now functions as an anode (i.e. relatively more positive) to generate oxygen. This is the case for every alternate cell unit. The arrowheads shown in **Fig.5B** indicate the electron and ionic current circuit. **Fig.5C** is an electrical equivalent circuit representation of **Fig.5B**, where the resistive elements represent the ionic resistance between adjacent anode/cathode plates. Thus it can be seen that the cell units are connected in series.

Because of the change of function of the cell plates **90a** and **98a**, the complementary gases are liberated at each, hence the respective channels **112** are connected to the opposite gas conduit **132,133**. Practically, this can be achieved by the simple reversal of the cell plates **90,98**.

Fig.6 shows the three cell units **125** of **Fig.5A** connected to a gas collection arrangement. The cell units **125** are located within a tank **140** which is filled with water/electrolyte to the indicated level **h**. The water is consumed as the electrolysis process proceeds, and replenishing supply is provided via the inlet **152**. The water/electrolyte level **h** can be viewed via the sight glass **154**. In normal operation, the different streams of hydrogen and oxygen are produced and passed from the cell units **125** to respective rising columns **142,144**. That is, the pressure of electrolyte on opposed sides of the PTFE membranes **116** is equalised, thus the gases cannot admix.

The columns **142,144** also are filled with the water/electrolyte, and as it is consumed at the electrode plates, replenishing supply of electrolyte is provided by way of circulation through the water/electrolyte conduits **134,135**. The circulation is caused by entrainment by the liberated gases, and by the circulatory inducing nature of the conduits and columns.

The upper extent of the tank **140** forms two scrubbing towers **156,158**, respectively for the collection of oxygen and hydrogen gases. The gases pass up a respective column **142,144**, and out from the columns via openings therein at a point within the interleaved baffles **146**. The point where the gases exit the columns **142,144** is beneath the water level **h**, which serves to settle any turbulent flow and entrained electrolyte. The baffles **146** located above the level **h** scrub the gas of any entrained electrolyte, and the scrubbed gas then exits by respective gas outlet columns **148,150** and so to a gas receiver. The level **h** within the tank **140** can be regulated by any convenient means, including a float switch, again with the replenishing water being supplied by the inlet pipe **152**.

The liberated gases will always separate from the water/electrolyte solution by virtue of the difference in densities. Because of the relative height of the respective set of baffles, and due to the density differential between the gases and the water/electrolyte, it is not possible for the liberated hydrogen and oxygen gases to mix. The presence of the full volume of water within the tank **140** maintains the cell plates in an immersed state, and further serves to absorb the shock of any internal detonations should they occur.

In the event that a gas admixture is required, then firstly the two flow valves **136,137** respectively located in the oxygen gas outlet conduit **132** and water/electrolyte inlet port **134** are closed. This blocks the outlet path for the oxygen gas and forces the inlet water/electrolyte to pass to the inlet conduit **134** via a one-way check valve **139** and pump **138**. The water/electrolyte within the tank **140** is under pressure by virtue of its depth (volume), and the pump **138** operates to increase the pressure of water/electrolyte occurring about the anode cell plates **90,98a** to be at an increased pressure with respect to the water/electrolyte on the other side of the membrane **116**.

This pressure differential is sufficient to cause the oxygen gas to migrate through the membrane, thus admixed oxygen and hydrogen are liberated via the gas output conduit **133** and column **144**. Since there is no return path for the water/electrolyte supplied by the pump **138**, the pressure about the cell plates **90,98a** will increase further, and to a point where the difference is sufficient such that the water/electrolyte also can pass through the membrane **116**. Typically, pressure differential in the range of 1.5 - 10 psi is required to allow passage of gas, and a pressure differential in the range of 10 - 40 psi for water/electrolyte.

While only three cell units **125** are shown, clearly any number, connected in series, can be implemented.

Embodiments of the present invention now will be described. Where applicable, like reference numerals have been used.

Fig.7A and **Fig.7B** show a first type of cell plate **190** respectively as an end view and as an enlarged cross-sectional view along line **VIIb-VIIb**. The cell plate **190** differs from the previous cell plate **90** shown in **Fig.1A** and **Fig.1B** in a number of important aspects. The region of the electrode disc **192** received within the sleeve **194** now is perforated. The function of these perforations is to further reduce the weight of the cell plate **190**. The shaft holes **200,202** again pass through the electrode disc **192**, but so too do the upper holes **204,206** through which the conduits for the out-flow of liberated hydrogen and oxygen gases pass. The bottom holes **208,210**, provided for the inlet of water and electrolyte, now also are located in the region of the sleeve **194** coincident with the perforated edge margin of the electrode disc **192**. The channels **212,218** respectively communicating with the port hole **204** and the supply hole **210** also are shown.

Fig.8A and **Fig.8B** show a second type of cell plate **198** as a companion to the first cell plate **190**, and as the same respective views. The second cell plate **198** is somewhat similar to the cell plate **98** previously shown in **Fig.2A** and **Fig.2B**. The differences between them are the same as the respective differences between the cell

plate shown in **Fig.1A** and **Fig.1B** and the one shown in **Fig.7A** and **Fig.7B**. The arrangement of the respective channels **220,222** with respect to the port **206** and the water supply hole **208** also are shown.

In the fabrication of the cell plates **190,198**, the sleeve **94** is injection moulded from PVC plastics material formed about the edge margin of the electrode disc **192**.

The injection moulding process results in the advantageous forming of interconnecting sprues forming within the perforations **196** in the region of the disc **192** held within the sleeve **194**, thus firmly anchoring the sleeve **194** to the disc **192**.

Fig.9 is a view similar to **Fig.3**, but for the modified porting arrangement and perforations (shown in phantom where covered by the sleeve) of the region of the disc **192** within and immediately outside of the sleeve **194**.

Fig.10 shows a cell unit **225** in the form of an exploded alternating stacking of first and second cell plates **190,198**, much in the same manner as **Fig.4**. Only two pairs of anode/cathode cell plates are shown, however the number of such plates can be greatly increased per cell unit **225**. The membrane **216** preferably is type QR-HE silica fibre with the alternative being PTFE. Both are available from Tokyo Roshi International Inc. (Advantec) of Japan. Type QR-HE is a hydrophobic material having 0.2 to 1.0 micron interstices, and is capable of operation at temperatures up to 1,000^{0}C. The cell unit **225** can be combined with other such cell units **225** to form an interconnected cell bank in the same manner as shown in **Fig.5A**, **Fig.5B** and **Fig.5C**.

Furthermore, the cell units can be put to use in a gas collection arrangement such as that shown in **Fig.6**. Operation of the gas separation system utilising the new cell plates **190,198** is in the same manner as previously described.

Fig.11 is an enlarged cross-sectional view of three cell plates in the vicinity of the oxygen port **204**. The cell plates comprise two of the first type of plate **190** shown in **Fig.7A** constituting a positive plate, and a single one of the second type of plate **198** shown in **Fig.8A** representing a negative plate. The location of the respective channels **212** for each of the positive cell plates **190** is shown as a dashed representation. The respective sleeves **194** of the three cell plates are formed from moulded PVC plastics as previously described, and in the region that forms the perimeter of the port **204** have a configuration particular to whether a cell plate is positive or negative. In the present case, the positive cell plates **190** have a flanged foot **230** that, in the assembled construction, form the contiguous boundary of the gas port **204**. Each foot **230** has two circumferential ribs **232** which engage corresponding circumferential grooves **234** in the sleeve **194** of the negative plate **198**.

The result of this arrangement is that the exposed metal area of the negative cell plates **198** always are insulated from the flow of oxygen gas liberated from the positive cell plates **190**, thus avoiding the possibility of spontaneous explosion by the mixing of the separated hydrogen and oxygen gases. This arrangement also overcomes the unwanted production of either oxygen gas or hydrogen gas in the gas port.

For the case of the gas port **206** carrying the hydrogen gas, the relative arrangement of the cell plates is reversed such that a flanged footing now is formed on the sleeve **194** of the other type of cell plate **198**. This represents the converse arrangement to that shown in **Fig.11**.

Fig.12A and **Fig.12B** show perspective side views of adjacent cell plates, with **Fig.12A** representing a positive cell plate **190** and **Fig.12B** representing a negative cell plate **198**. The gas port **206** thus formed is to carry hydrogen gas. The mating relationship between the flanged foot **230** and the end margin of the sleeve **194** of the positive cell plate **192** can be seen, particularly the interaction between the ribs **232** and the grooves **234**.

Fig.13 is a cross-sectional view of four cell plates formed into a stacked arrangement delimited by two segmentation plates **240**, together forming a cell unit **242**. Thus there are two positive cell plates **190** and two negative cell plates **198** in alternating arrangement. The cross-section is taken in the vicinity of a shaft hole **202** through which a negative conductive shaft **244** passes. The shaft **244** therefore is in intimate contact with the electrode discs **192** of the negative cell plates **198**. The electrodes discs **192** of the positive cell plates **190** do not extend to contact the shaft **244**. The sleeve **194** of the alternating negative cell plates **198** again have a form of flanged foot **246**, although in this case the complementarily shaped ribs and grooves are formed only on the sleeve of the negative cell plates **198**, and not on the sleeve **194** of the positive cell plates **190**. The segmentation plates **240** serve to delimit the stacked plates forming a single cell unit **242**, with ones of the cell units **242** being stacked in a linear array to form a cell bank such as has been shown in **Fig.5A**.

A threaded shaft nut **250** acts as a spacer between adjacent electrodes connecting with the shaft **244**. **Fig.14** is a perspective view of the shaft nut **250** showing the thread **252** and three recesses **254** for fastening nuts, screws or the like.

In all of **Figs.11 to 13**, the separation membrane material **216** is not shown, but is located in the spaces **248** between adjacent cell plates **190,198**, extending to the margins of the electrode disks **192** in the vicinity of the gas ports **204,206** or the shaft holes **200,202**.

An electrolysis hydrogen and oxygen gas system incorporating a gas separation system, such as has been described above, can therefore be operated to establish respective high pressure stores of gas. That is, the separated hydrogen and oxygen gases liberated by the electrolysis process are stored in separate gas receivers or pressure vessels. The pressure in each will increase with the continuing inflow of gas.

Fig.15 shows an idealised electrolysis system, comprising an electrolysis cell **150** that receives a supply of water to be consumed. The electrolysis process is driven by a DC potential (**Es**) **152**. The potential difference applied to the cell **150** therefore must be sufficient to electrolyse the water into hydrogen and oxygen gas dependent upon, inter alia, the water pressure **PC** and the back pressure of gas **PB** acting on the surface of the water, together with the water temperature **Tc**. The separate liberated hydrogen and oxygen gases, by a priming function, are pressurised to a high value by storage in respective pressure vessels **158,160**, being carried by gas lines **154,156**.

The pressurised store of gases then are passed to an energy conversion device that converts the flow of gas under pressure to mechanical energy (e.g. a pressure drop device **162**). This mechanical energy recovered **WM** is available to be utilised to provide useful work. The mechanical energy **WM** also can be converted into electrical form, again to be available for use.

The resultant exhausted gases are passed via lines **164,166** to a combustion chamber **168**. Here, the gases are combusted to generate heat **QR**, with the waste product being water vapour. The recovered heat **QR** can be recycled to the electrolysis cell to assist in maintaining the advantageous operating temperature of the cell.

The previously described combustion chamber **168** can alternatively be a fuel cell. The type of fuel cell can vary from phosphoric acid fuel cells through to molten carbonate fuel cells and solid oxide cells. A fuel cell generates both heat (**QR**) and electrical energy (**WE**), and thus can supply both heat to the cell **150** or to supplement or replace the DC supply (**Es**) **152**.

Typically, these fuel cells can be of the type LaserCell TM as developed by Dr Roger Billings, the PEM Cell as available from Ballard Power Systems Inc. Canada or the Ceramic Fuel Cell (solid oxide) as developed by Ceramic Fuel Cells Ltd., Melbourne, Australia.

It is, of course, necessary to replenish the pressurised store of gases, thus requiring the continuing consumption of electrical energy. The recovered electrical energy **WE** is in excess of the energy required to drive electrolysis at the elevated temperature and is used to replace the external electrical energy source **152**, thereby completing the energy loop after the system is initially primed and started.

The present inventor has determined that there are some combinations of pressure and temperature where the efficiency of the electrolysis process becomes advantageous in terms of the total energy recovered, either as mechanical energy by virtue of a flow of gas at high pressure or as thermal energy by virtue of combustion (or by means of a fuel cell), with respect to the electrical energy consumed, to the extent of the recovered energy exceeding the energy required to sustain electrolysis at the operational pressure and temperature. This has been substantiated by experimentation. This notion has been termed "over-unity".

"Over-unity" systems can be categorised as broadly falling into three types of physical phenomena:

(i) An electrical device which produces 100 Watts of electrical energy as output after 10 Watts of electrical energy is input thereby providing 90 Watts of overunity (electrical) energy.

(ii) An electro-chemical device such as an electrolysis device where 10 Watts of electrical energy is input and 8 Watts is output being the thermal value of the hydrogen and oxygen gas output. During this process, 2 Watts of electrical energy converted to thermal energy is lost due to specific inefficiencies of the electrolysis system. Pressure - as the over-unity energy - is irrefutably produced during the process of hydrogen and oxygen gas generation during electrolysis. Pressure is a product of the containment of the two separated gases. The Law of Conservation of Energy (as referenced in "Chemistry Experimental Foundations", edited by Parry, R.W.; Steiner, L.E.; Tellefsen, R.L.; Dietz, P.M. Chap. 9, pp. 199-200, Prentice-Hall, New Jersey" and "An Experimental Science", edited by Pimentel, G.C., Chap. 7, pp. 115-117, W.H. & Freeman Co. San Francisco)

is in equilibrium where the 10 watts of input equals the 8 watts thermal energy output plus the 2 watts of losses. However, this Law ends at this point. The present invention utilises the apparent additional energy being the pressure which is a by-product of the electrolysis process to achieve over-unity.

(iii) An electro-chemical device which produces an excess of thermal energy after an input of electrical energy in such devices utilised in "cold fusion" e.g. 10 watts of electrical energy as input and 50 watts of thermal energy as output.

The present invention represents the discovery of means by which the previously mentioned second phenomenon can be embodied to result in "over-unity" and the realisation of 'free' energy. As previously noted, this is the process of liberating latent molecular energy. The following sequence of events describes the basis of the availability of over-unity energy.

In a simple two plate (anode/cathode) electrolysis cell, an applied voltage differential of 1.57 DC Volts draws 0.034 Amps per cm^2 and results in the liberation of hydrogen and oxygen gas from the relevant electrode plate. The electrolyte is kept at a constant temperature of 40^0C, and is open to atmospheric pressure.

The inefficiency of an electrolytic cell is due to its ionic resistance (approximately 20%), and produces a by-product of thermal energy. The resistance reduces, as does the minimum DC voltage required to drive electrolysis, as the temperature increases. The overall energy required to dissociate the bonding electrons from the water molecule also decreases as the temperature increases. In effect, thermal energy acts as a catalyst to reduce the energy requirements in the production of hydrogen and oxygen gases from the water molecule. Improvements in efficiency are obtainable by way of a combination of thermal energy itself and the NaOH electrolyte both acting to reduce the resistance of the ionic flow of current.

Thermal 'cracking' of the water molecule is known to occur at $1{,}500^0$C, whereby the bonding electrons are dissociated and subsequently 'separate' the water molecule into its constituent elements in gaseous form. This thermal cracking then allows the thermal energy to become a consumable. Insulation can be introduced to conserve thermal energy, however there will always be some thermal energy losses.

Accordingly, thermal energy is both a catalyst and a consumable (in the sense that the thermal energy excites bonding electrons to a higher energetic state) in the electrolysis process. A net result from the foregoing process is that hydrogen is being produced from thermal energy because thermal energy reduces the overall energy requirements of the electrolysis system.

Referring to the graph titled "Flow Rate At A Given Temperature" shown in **Fig.16**, it has been calculated that at a temperature of $2{,}000^0$C, 693 litres of hydrogen/oxygen admixed gas (2:1) will be produced. The hydrogen content of this volume is 462 litres. At an energy content of 11 BTUs per litre of hydrogen, this then gives an energy amount of 5,082 BTUs (11 x 462). Using the BTU:kilowatt conversion factor of 3413:1, 5,082 BTUs of the hydrogen gas equate to 1.49 kW. Compare this with l kW to produce the 693 litres of hydrogen/oxygen (including 463 litres of hydrogen). The usage of this apparatus therefore identifies that thermal energy, through the process of electrolysis, is being converted into hydrogen. These inefficiencies, i.e. increased temperature and NaOH electrolyte, reduce with temperature to a point at approximately 1000^0C where the ionic resistance reduces to zero, and the volumetric amount of gases produced per kWh increases.

The lowering of DC voltage necessary to drive electrolysis by way of higher temperatures is demonstrated in the graph in **Fig.17** titled "The Effect of temperature on Cell Voltage".

The data in **Fig.16** and **Fig.17** have two sources. Cell voltages obtained from 0^0C up to and including 100^0C were those obtained by an electrolysis system as described above. Cell voltages obtained from 150^0C up to $2{,}000^0$C are theoretical calculations presented by an acknowledged authority in this field, Prof. J. O'M. Bockris. Specifically, these findings were presented in "Hydrogen Energy, Part A, Hydrogen Economy", Miami Energy Conference, Miami Beach, Florida, 1974, edited by T. Nejat Veziroglu, Plenum Press, pp. 371-379. These calculations appear on page 374.

By inspection of **Fig.17** and **Fig.18** (titled "Flow Rate of Hydrogen and Oxygen at 2:1"), it can be seen that as temperature increases in the cell, the voltage necessary to dissociate the water molecule is reduced, as is the overall energy requirement. This then results in a higher gas flow per kWh.

As constrained by the limitation of the materials within the system, the operationally acceptable temperature of the system is 1000^0C. This temperature level should not, however, be considered as a restriction. This temperature is based on the limitations of the currently commercially available materials. Specifically, this system can utilise material such as compressed Silica Fibre for the sleeve around the electrolysis plate and hydrophobic Silica Fibre

(part no. QR-100HE supplied by Tokyo Roshi International Inc., also known as "Advantec") for the diaphragm (as previously discussed) which separates the electrolysis disc plates. In the process of assembling the cells, the diaphragm material and sleeved electrolysis plates **190,198** are adhered to one another by using high-temperature-resistant silica adhesive (e.g. the "Aremco" product "Ceramabond 618" which has an operational tolerance specification of 1,000^{0}C).

For the electrolysis cell described above, with the electrolyte at 1,000^{0}C and utilising electrical energy at the rate of 1 kWh, 167 litres of oxygen and 334 litres of hydrogen per hour will be produced.

The silica fibre diaphragm **116** previously discussed separates the oxygen and hydrogen gas streams by the mechanism of density separation, and produce a separate store of oxygen and hydrogen at pressure. Pressure from the produced gases can range from 0 to 150,000 Atmospheres. At higher pressures, density separation may not occur. In this instance, the gas molecules can be magnetically separated from the electrolyte if required.

In reference to the experiments conducted by Messrs Hamann and Linton (S.D. Hamann and M. Linton, Trans. Faraday Soc. 62,2234-2241, specifically, page 2,240), this research has proven that higher pressures can produce the same effect as higher temperatures in that the conductivity increases as temperature and/or pressure increases. At very high pressures, the water molecule dissociates at low temperatures. The reason for this is that the bonding electron is more readily removed when under high pressure. The same phenomenon occurs when the bonding electrons are at a high temperature (e.g. 1,500^{0}C) but at low pressures.

As shown in **Fig.15**, hydrogen and oxygen gases are separated into independent gas streams flowing into separate pressure vessels **158,160** capable of withstanding pressures up to 150,000 Atmospheres. Separation of the two gases thereby eliminates the possibility of detonation. It should also be noted that high pressures can facilitate the use of high temperatures within the electrolyte because the higher pressure elevates the boiling point of water.

Experimentation shows that 1 litre of water can yield 1,850 litres of hydrogen/oxygen (in a ratio of 2: 1) gas mix after decomposition, this significant differential(1:1,850) is the source of the pressure. Stripping the bonding electrons from the water molecule, which subsequently converts liquid into a gaseous state, releases energy which can be utilised as pressure when this occurs in a confined space.

A discussion of experimental work in relation to the effects of pressure in electrolysis processes can be obtained from "Hydrogen Energy, Part A, Hydrogen Economy Miami Energy Conference, Miami Beach, Florida, 1974, edited by T. Nejat Veziroglu, Plenum Press". The papers presented by F.C. Jensen and F.H. Schubert on pages 425 to 439 and by John B. Pangborn and John C. Sharer on pages 499 to 508 are of particular relevance.

Attention must be drawn to the above published material; specifically on page 434, third paragraph, where reference is made to "Fig.7 shows the effect of pressure on cell voltage...". Fig. 7 on page 436 ("Effect of Pressure on SFWES Single Cell") indicates that if pressure is increased, then so too does the minimum DC voltage.

These quotes were provided for familiarisation purposes only and not as demonstrable and empirical fact. Experimentation by the inventor factually indicates that increased pressure (up to 2,450 psi) in fact lowers the minimum DC voltage.

This now demonstrable fact, whereby increased pressure actually lowers minimum DC voltage, is further exemplified by the findings of Messrs. Nayar, Ragunathan and Mitra in 1979 which can be referenced in their paper: "Development and operation of a high current density high pressure advanced electrolysis cell".

Nayar, M.G.; Ragunathan, P. and Mitra, S.K. International Journal of Hydrogen Energy (Pergamon Press Ltd.), 1980, Vol. 5, pp. 65-74. Their Table 2 on page 72 expressly highlights this as follows: "At a Current density (ASM) of 7,000 and at a temperature of 80^{0}C, the table shows identical Cell voltages at both pressures of 7.6 kg/cm^2 and 11.0 kg/cm^2. But at Current densities of 5,000, 6,000, 8,000, 9,000 and 10,000 (at a temperature of 80^{0}C), the Cell voltages were lower at a pressure of 11.0 kg/cm^2 than at a pressure of 7.6 kg/cm^2. " The present invention thus significantly improves on the apparatus employed by Mr. M.G. Nayar, et al, at least in the areas of cell plate materials, current density and cell configuration.

In the preferred form the electrode discs **192** are perforated mild steel, conductive polymer or perforated resin bonded carbon cell plates. The diameter of the perforated holes **196** is chosen to be twice the thickness of the plate in order to maintain the same total surface area prior to perforation. Nickel was utilised in the noted prior art system. That material has a higher electrical resistance than mild steel or carbon, providing the present invention with a lower voltage capability per cell.

The previously mentioned prior art system quotes a minimum current density (after conversion from ASM to Amps per square cm.) at 0.5 Amps per cm^2. The present invention operates at the ideal current density, established by experimentation, to minimise cell voltage which is 0.034 Amps per cm^2.

When compared with the aforementioned system, an embodiment of the present invention operates more efficiently due to a current density improvement by a factor of 14.7, the utilisation of better conducting cell plate material which additionally lowers cell voltage, a lower cell voltage of 1.49 at 80^0C as opposed to 1.8 volts at 80^0C, and a compact and efficient cell configuration.

In order to further investigate the findings of Messrs. M.G. Nayer, et al, the inventor conducted experiments utilising much higher pressures. For Nayer, et al, the pressures were 7.6 kg/cm^2 to 11.0 kg/cm^2, whereas inventor's pressures were 0 psi to 2,450 psi in an hydrogen/oxygen admixture electrolysis system.

This electrolysis system was run from the secondary coil of a transformer set approximately at maximum 50 Amps and with an open circuit voltage of 60 Volts. In addition, this electrolysis system is designed with reduced surface area in order that it can be housed in an hydraulic container for testing purposes. The reduced surface area subsequently caused the gas production efficiency to drop when compared with previous (i.e. more efficient) prototypes. The gas flow rate was observed to be approximately 90 litres per hour at 70^0C in this system as opposed to 310 litres per hour at 70^0C obtained from previous prototypes. All of the following data and graphs have been taken from the table shown in **Fig.19**.

Referring to **Fig.20** (titled "Volts Per Pressure Increase"), it can be seen that at a pressure of 14.7 psi (i.e. 1 Atmosphere), the voltage measured as 38.5V and at a pressure of 2,450 psi, the voltage measured as 29.4V. This confirms the findings of Nayar et al that increased pressure lowers the system's voltage. Furthermore, these experiments contradict the conclusion drawn by F.C. Jensen and F.H. Schubert ("Hydrogen Energy, Part A, Hydrogen Economy Miami Energy Conference, Miami Beach, Florida, 1974, edited by T. Nejat Veziroglu, Plenum Press", pp 425 to 439, specifically Fig. 7 on page 434) being that "... as the pressure of the water being electrolysed increases, then so too does the minimum DC Voltage". As the inventor's experiments are current and demonstrable, the inventor now presents his findings as the current state of the art and not the previously accepted findings of Schubert and Jensen.

Referring to **Fig.21** (titled "Amps Per Pressure Increase"), it can be seen that at a pressure of 14.7 psi (i.e. 1 Atmosphere being Test Run No. 1), the current was measured as 47.2A and at a pressure of 2,450 psi (Test Run No. 20), the current was measured as 63A.

Referring to **Fig.22** (titled "Kilowatts Per Pressure Increase"), examination of the power from Test Run No. 1 (1.82 kW) through to Test Run No. 20 (1.85 kW) indicates that there was no major increase in energy input required at higher pressures in order to maintain adequate gas flow.

Referring to **Fig.23** (titled "Resistance (Ohms) Per Pressure Increase"), the resistance was calculated from Test Run No. 1 (0.82 ohms) to Test Run No. 20 (0.47 ohms). These data indicate that the losses due to resistance in the electrolysis system at high pressures are negligible.

Currently accepted convention has it that dissolved hydrogen, due to high pressures within the electrolyte, would cause an increase in resistance because hydrogen and oxygen are bad conductors of ionic flow. The net result of which would be that this would decrease the production of gases.

These tests indicate that the ions find their way around the H2 and O2 molecules within the solution and that at higher pressures, density separation will always cause the gases to separate from the water and facilitate the movement of the gases from the electrolysis plates. A very descriptive analogy of this phenomenon is where the ion is about the size of a football and the gas molecules are each about the size of a football field thereby allowing the ion a large manoeuvring area in which to skirt the molecule.

Referring to **Fig.24** (titled "Pressure Differential (Increase)"), it can be seen that the hydrogen/oxygen admixture caused a significant pressure increase on each successive test run from Test Run No. 1 to Test Run No. 11. Test Runs thereafter indicated that the hydrogen/oxygen admixture within the electrolyte solution imploded at the point of conception (being on the surface of the plate).

Referring again to the table of **Fig.19**, it can be noted the time taken from the initial temperature to the final temperature in Test Run No. 12 was approximately half the time taken in Test Run No. 10. The halved elapsed time (from 40^0C to 70^0C) was due to the higher pressure causing the hydrogen/oxygen admixture to detonate which subsequently imploded within the system thereby releasing thermal energy.

Referring to the table shown in **Fig.25** (titled "Flow Rate Analysis Per Pressure Increase"), these findings were brought about from flow rate tests up to 200 psi and data from **Fig.24**. These findings result in the data of **Fig.25** concerning gas flow rate per pressure increase. Referring to **Fig.25**, it can be seen that at a pressure of 14.7 psi (1 Atmosphere) a gas production rate of 88 litres per kWh is being achieved. At 1,890 psi, the system produces 100 litres per kWh. These findings point to the conclusion that higher pressures do not affect the gas production rate of the system, the gas production rate remains constant between pressures of 14.7 psi (1 Atmosphere) and 1,890 psi.

Inferring from all of the foregoing data, increased pressure will not adversely affect cell performance (gas production rate) in separation systems where hydrogen and oxygen gases are produced separately, nor as a combined admixture. Therefore, in an enclosed electrolysis system embodying the invention, the pressure can be allowed to build up to a predetermined level and remain at this level through continuous (on-demand) replenishment. This pressure is the over-unity energy because it has been obtained during the normal course of electrolysis operation without additional energy input. This over-unity energy (i.e. the produced pressure) can be utilised to maintain the requisite electrical energy supply to the electrolysis system as well as provide useful work.

The following formulae and subsequent data do not take into account the apparent efficiencies gained by pressure increase in this electrolysis system such as the gained efficiency factors highlighted by the previously quoted Hamann and Linton research. Accordingly, the over-unity energy should therefore be considered as conservative claims and that such claimed over-unity energy would in fact occur at much lower pressures.

This over-unity energy can be formalised by way of utilising a pressure formula as follows: $E = (P - P_O) V$ which is the energy (E) in Joules per second that can be extracted from a volume (V) which is cubic meters of gas per second at a pressure (P) measured in Pascals and where P_0 is the ambient pressure (i.e. 1 Atmosphere).

In order to formulate total available over-unity energy, we will first use the above formula but will not take into account efficiency losses. The formula is based on a flow rate of 500 litres per kWh at $1{,}000^0$C. When the gases are produced in the electrolysis system, they are allowed to self-compress up to 150,000 Atmospheres which will then produce a volume (V) of 5.07×10^{-8} m^3/sec.

Work [Joules/sec] = $((150-1) \times 10^8)\ 5.07 \times 10^{-8}\ m^3/sec = 760.4$ Watts

The graphs in **Figs.27-29** (Over-Unity in watt-hours) indicate over-unity energy available excluding efficiency losses. However, in a normal work environment, inefficiencies are encountered as energy is converted from one form to another.

The results of these calculations will indicate the amount of surplus- over-unity energy after the electrolysis system has been supplied with its required 1 kWh to maintain its operation of producing the 500 lph of hydrogen and oxygen (separately in a ratio of 2:1).

The following calculations utilise the formula stated above, including the efficiency factor. The losses which we will incorporate will be 10% loss due to the energy conversion device (converting pressure to mechanical energy, which is represented by device **162** in **Fig.15**) and 5% loss due to the DC generator $\mathbf{W_e}$ providing a total of 650 watt-hours which results from the pressurised gases.

Returning to the 1 kWh, which is required for electrolysis operation, this 1 kWh is converted (during electrolysis) to hydrogen and oxygen. The 1 kWh of hydrogen and oxygen is fed into a fuel cell. After conversion to electrical energy in the fuel cell, we are left with 585 watt-hours due to a 65 % efficiency factor in the fuel cell (35 % thermal losses are fed back into electrolysis unit **150** via $\mathbf{Q_r}$ in **Fig.15**).

Fig.30 graphically indicates the total over-unity energy available combining a fuel cell with the pressure in this electrolysis system in a range from 0 kAtmospheres to 150 kAtmospheres. The data in **Fig.30** have been compiled utilising the previously quoted formulae where the watt-hours findings are based on incorporating the 1 kWh required to drive the electrolysis system, taking into account all inefficiencies in the idealised electrolysis system (complete the loop) and then adding the output energy from the pressurised electrolysis system with the output of the fuel cell. This graph thereby indicates the energy break-even point (at approximately 66 kAtmospheres) where the idealised electrolysis system becomes self-sustaining.

In order to scale up this system for practical applications, such as power stations that will produce 50 MW of available electrical energy (as an example), the required input energy to the electrolysis system will be 170 MW (which is continually looped).

The stores of high pressure gases can be used with a hydrogen/oxygen internal combustion engine, as shown in **Figs. 31A to 31E**. The stores of high pressure gases can be used with either forms of combustion engines having an expansion stroke, including turbines, rotary, Wankel and orbital engines. One cylinder of an internal combustion engine is represented, however it is usually, but not necessarily always the case, that there will be other cylinders in the engine offset from each other in the timing of their stroke. The cylinder **320** houses a piston head **322** and crank **324**, with the lower end of the crank **324** being connected with a shaft **326**. The piston head **322** has conventional rings **328** sealing the periphery of the piston head **322** to the bore of the cylinder **320**.

A chamber **330**, located above the top of the piston head **322**, receives a supply of regulated separated hydrogen gas and oxygen gas via respective inlet ports **332,334**. There is also an exhaust port **336** venting gas from the chamber **330**.

The engine's operational cycle commences as shown in **Fig.31A**, with the injection of pressurised hydrogen gas, typically at a pressure of 5,000 psi to 30,000 psi, sourced from a reservoir of that gas (not shown). The oxygen gas port **334** is closed at this stage, as is the exhaust port **336**. Therefore, as shown in **Fig.31B**, the pressure of gas forces the piston head **322** downwards, thus driving the shaft **326**. The stroke is shown as distance "**A**".

At this point, the oxygen inlet **334** is opened to a flow of pressurised oxygen, again typically at a pressure of 5,000 psi to 30,000 psi, the volumetric flow rate being one half of the hydrogen already injected, so that the hydrogen and oxygen gas within the chamber **330** are the proportion 2:1.

Conventional expectations when injecting a gas into a confined space (e.g. such as a closed cylinder) are that gases will have a cooling effect on itself and subsequently its immediate environment (e.g. cooling systems/refrigeration). This is not the case with hydrogen. The inverse applies where hydrogen, as it is being injected, heats itself up and subsequently heats up its immediate surroundings. This effect, being the inverse of other gases, adds to the efficiency of the overall energy equation when producing over-unity energy.

As shown in **Fig.31C**, the piston head **322** has moved a further stroke, shown as distance "**B**", at which time there is self-detonation of the hydrogen and oxygen mixture. The hydrogen and oxygen inlets **332,334** are closed at this point, as is the exhaust **336**.

As shown in **Fig.31D**, the piston head is driven further downwards by an additional stroke, shown as distance "**C**", to an overall stroke represented by distance "**D**". The added piston displacement occurs by virtue of the detonation.

As shown in **Fig.31E**, the exhaust port **336** is now opened, and by virtue of the kinetic energy of the shaft **326** (or due to the action of others of the pistons connected with the shaft), the piston head **322** is driven upwards, thus exhausting the waste steam by the exhaust port **336** until such time as the situation of **Fig.31E** is achieved so that the cycle can repeat.

A particular advantage of an internal combustion motor constructed in accordance with the arrangement shown in **Figs.31A to 31E** is that no compression stroke is required, and neither is an ignition system required to ignite the working gases, rather the pressurised gases spontaneously combust when provided in the correction proportion and under conditions of high pressure.

Useful mechanical energy can be extracted from the internal combustion engine, and be utilised to do work. Clearly the supply of pressurised gas must be replenished by the electrolysis process in order to allow the mechanical work to continue to be done. Nevertheless, the inventor believes that it should be possible to power a vehicle with an internal combustion engine of the type described in **Figs.31A to 31E**, with that vehicle having a store of the gases generated by the electrolysis process, and still be possible to undertake regular length journeys with the vehicle carrying a supply of the gases in pressure vessels (somewhat in a similar way to, and the size of, petrol tanks in conventional internal combustion engines).

When applying over-unity energy in the form of pressurised hydrogen and oxygen gases to this internal combustion engine for the purpose of providing acceptable ranging (i.e. distance travelled), pressurised stored gases as mentioned above may be necessary to overcome the problem of mass inertia (e.g. stop-start driving). Inclusion of the stored pressurised gases also facilitates the ranging (i.e. distance travelled) of the vehicle.

Over-unity energy (as claimed in this submission) for an average sized passenger vehicle will be supplied at a continual rate of between 20 kW and 40 kW. In the case of an over-unity energy supplied vehicle, a supply of water (e.g. similar to a petrol tank in function) must be carried in the vehicle.

Clearly electrical energy is consumed in generating the gases. However it is also claimed by the inventor that an over-unity energy system can provide the requisite energy thereby overcoming the problem of the consumption of

fossil fuels either in conventional internal combustion engines or in the generation of the electricity to drive the electrolysis process by coal, oil or natural gas generators.

Experimentation by the inventor shows that if 1,850 litres of hydrogen/oxygen gas mix (in a ratio of 2:1) is detonated, the resultant product is 1 litre of water and 1,850 litres of vacuum if the thermal value of the hydrogen and oxygen gas mix is dissipated. At atmospheric pressure, 1 litre of admixed hydrogen/oxygen (2:1) contains 11 BTUs of thermal energy. Upon detonation, this amount of heat is readily dissipated at a rate measured in microseconds which subsequently causes an implosion (inverse differential of 1,850:1). Tests conducted by the inventor at 3 atmospheres (hydrogen/oxygen gas at a pressure of 50 psi) have proven that complete implosion does not occur. However, even if the implosion container is heated (or becomes heated) to 400C, total implosion will still occur.

This now available function of idiosyncratic implosion can be utilised by a pump taking advantage of this action. Such a pump necessarily requires an electrolysis gas system such as that described above, and particularly shown in **Fig.6**.

Figs. 32A-32C show the use of implosion and its cycles in a pumping device **400**. The pump **400** is initially primed from a water inlet **406**. The water inlet **406** then is closed-off and the hydrogen/oxygen gas inlet **408** is opened.

As shown in **Fig.32B**, the admixed hydrogen/oxygen gas forces the water upward through the one-way check valve **410** and outlet tube **412** into the top reservoir **414**. The one-way check valves **410,416** will not allow the water to drop back into the cylinder **404** or the first reservoir **402**. This force equates to lifting the water over a distance. The gas inlet valve **408** then is closed, and the spark plug **418** detonates the gas mixture which causes an implosion (vacuum). Atmospheric pressure forces the water in reservoir **402** up through tube **420**.

Fig.32C shows the water having been transferred into the pump cylinder **404** by the previous action. The implosion therefore is able to 'lift' the water from the bottom reservoir **402** over a distance which is approximately the length of tube **420**.

The lifting capacity of the implosion pump is therefore approximately the total of the two distances mentioned. This completes the pumping cycle, which can then be repeated after the reservoir **402** has been refilled.

Significant advantages of this pump are that it does not have any diaphragms, impellers nor pistons thereby essentially not having any moving parts (other than solenoids and one-way check valves). As such, the pump is significantly maintenance free when compared to current pump technology.

It is envisaged that this pump with the obvious foregoing positive attributes and advantages in pumping fluids, semi-fluids and gases can replace all currently known general pumps and vacuum pumps with significant benefits to the end-user of this pump.

CLAIMS

1. A looped energy system for the generation of excess energy available to do work, said system comprising:
An electrolysis cell unit receiving a supply of water and for liberating separated hydrogen gas and oxygen gas by electrolysis due to a DC voltage applied across respective anodes and cathodes of said cell unit;
Hydrogen gas receiver means for receiving and storing hydrogen gas liberated by said cell unit;
Oxygen gas receiver means for receiving and storing oxygen gas liberated by said cell unit;
Gas expansion means for expanding said stored gases to recover expansion work; and
Gas combustion means for mixing and combusting said expanded hydrogen gas and oxygen gas to recover combustion work; and in which a proportion of the sum of the expansion work and the combustion work sustains electrolysis of said cell unit to retain operational gas pressure in said hydrogen and oxygen gas receiver means such that the energy system is self-sustaining and there is excess energy available from said sum of energies.

2. A looped energy system for the generation of excess energy available to do work, said system comprising:
An electrolysis cell unit receiving a supply of water and for liberating separated hydrogen gas and oxygen gas by electrolysis due to a DC voltage applied across respective anodes and cathodes of said cell unit;
Hydrogen gas receiver means for receiving and storing hydrogen gas liberated by said cell unit;
Oxygen gas receiver means for receiving and storing oxygen gas liberated by said cell unit;
Gas expansion means for expanding said stored gases to recover expansion work; and
Fuel cell means for recovering electrical work from said expanded hydrogen gas and oxygen gas; and wherein a proportion of the sum of the expansion work and the recovered electrical work sustains electrolysis of said cell

unit to retain operational gas pressure in said hydrogen and oxygen gas receiver means such that the energy system is self-sustaining and there is excess energy available from said sum of energies.

3. An energy system as claimed in Claim 1 or Claim 2 further comprising mechanical-to-electrical energy conversion means coupled to said gas expansion means to convert the expansion work to electrical expansion work to be supplied as said DC voltage to said cell unit.

4. An energy system as claimed in any one of the preceding claims wherein said water in said cell unit is maintained above a predetermined pressure by the effect of back pressure from said gas receiver means and above a predetermined temperature resulting from input heat arising from said combustion work and/or said expansion work.

5. A method for the generation of excess energy available to do work by the process of electrolysis, said method comprising the steps of:
Electrolysing water by a DC voltage to liberate separated hydrogen gas and oxygen gas;
Separately receiving and storing said hydrogen gas and oxygen gas in a manner to be self-pressuring;
Separately expanding said stores of gas to recover expansion work;
Combusting said expanded gases together to recover combustion work; and
Applying a portion of the sum of the expansion work and the combustion work as said DC voltage to retain operational gas pressures and sustain said electrolysing step, there thus being excess energy of said sum available.

6. A method for the generation of excess energy available to do work by the process of electrolysis, said method comprising the steps of:
Electrolysing water by a DC voltage to liberate separated hydrogen gas and oxygen gas;
Separately receiving and storing said hydrogen gas and oxygen gas in a manner to be self-pressuring;
Separately expanding said stores of gas to recover expansion work;
Passing said expanded gases together through a fuel cell to recover electrical work; and
Applying a portion of the sum of the expansion work and the recovered electrical work as said DC voltage to retain operational gas pressures and sustain said electrolysing step, there thus being excess energy of said sum available.

7. An internal combustion engine powered by hydrogen and oxygen comprising:
At least one cylinder and at least one reciprocating piston within the cylinder;
A hydrogen gas input port in communication with the cylinder for receiving a supply of pressurised hydrogen;
An oxygen gas input port in communication with the cylinder for receiving a supply of pressurised oxygen; and
An exhaust port in communication with the cylinder and wherein the engine is operable in a two-stroke manner whereby, at the top of the stroke, hydrogen gas is supplied by the respective inlet port to the cylinder driving the piston downwards, oxygen gas then is supplied by the respective inlet port to the cylinder to drive the cylinder further downwards, after which time self-detonation occurs and the piston moves to the bottom of the stroke and upwardly again with said exhaust port opened to exhaust water vapour resulting from the detonation.

8. An engine as claimed in Claim 7, wherein there are a plurality of said cylinder and an equal plurality of said pistons, said pistons being commonly connected to a shaft and relatively offset in stroke timing to co-operate in driving the shaft.

9. An implosion pump comprising a combustion chamber interposed, and in communication with, an upper reservoir and a lower reservoir separated by a vertical distance across which water is to be pumped, said chamber receiving admixed hydrogen and oxygen at a pressure sufficient to lift a volume of water the distance therefrom to the top reservoir, said gas in the chamber then being combusted to create a vacuum in said chamber to draw water from said lower reservoir to fill said chamber, whereupon a pumping cycle is established and can be repeated.

10. An implosion pump as claimed in Claim 9, further comprising conduit mean connecting a respective reservoir with said chamber and one-way flow valve means located in each conduit means to disallow reverse flow of water from said upper reservoir to said chamber and from said chamber to said lower reservoir.

11. A parallel stacked arrangement of cell plates for a water electrolysis unit, the cell plates alternately forming an anode and cathode of said electrolysis unit, and said arrangement including separate hydrogen gas and oxygen gas outlet port means respectively in communication with said anode cell plates and said cathode call plates and extending longitudinally of said stacked plates, said stacked cell plates being configured in the region of said conduits to mate in a complementary manner to form said conduits such that a respective anode cell plate or cathode cell plate is insulated from the hydrogen gas conduit or the oxygen gas conduit.

12. An arrangement of cell plates as claimed in Claim 11, wherein said configuration is in the form of a flanged foot that extends to a flanged foot of the next adjacent like-type of anode or cathode cell plate respectively.

Henry Paine's HHO Fuel Conversion System

This is a very interesting patent which describes a simple system for overcoming the difficult problem of storing the hydrogen/oxygen gas mix produced by electrolysis of water. Normally this "hydroxy" gas mix is too dangerous to be compressed and stored like propane and butane are, but this patent states that hydroxy gas can be converted to a more benign form merely by bubbling it through a hydrocarbon liquid. Henry automatically speaks of turpentine in the patent, which strongly suggests that he used it himself, and consequently, it would probably be a good choice for any tests of the process.

This patent is more than 120 years old and has only recently been brought to the attention of the various "watercar" internet Groups. Consequently, it should be tested carefully before being used. Any tests should be done with extreme caution, taking every precaution against injury or damage should the mixture explode. It should be stressed that hydroxy gas is highly explosive, with a flame front speed far too fast to be contained by conventional commercial flashback arrestors. It is always essential to use a bubbler to contain any accidental ignition of the gas coming out of the electrolyser cell, as shown here:

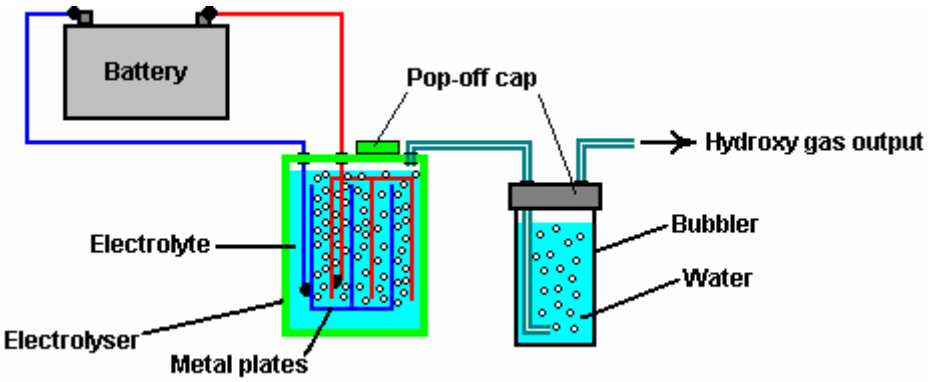

For the purposes of a test of the claims of this patent, it should be sufficient to fill the bubbler with turpentine rather than water, though if possible, it would be good to have an additional bubbler container for the turpentine, in which case, the bubbler with the water should come between the turpentine and the source of the flame. Any tests should be done in an open space, ignited remotely and the person running the test should be well protected behind a robust object. A disadvantage of hydroxy gas is that it requires a very small orifice in the nozzle used for maintaining a continuous flame and the flame temperature is very high indeed. If this patent is correct, then the modified gas produced by the process should be capable of being used in any conventional gas burner.

US Letters Patent 308,276 18th November 1884 Inventor: Henry M. Paine

PROCESS OF MANUFACTURING ILLUMINATING GAS

To all whom it may concern:

Be it known that I, Henry M. Paine, a citizen of the United States, residing at Newark, in the county of Essex and State of New Jersey, have invented certain new and useful Improvements in the Process of Manufacturing Illuminating-Gas; and I do hereby declare the following to be a full, clear, and exact description of the invention, such as will enable others skilled in the art to which it appertains, to make and use the same, reference being had to the accompanying drawing, and to letters or figures of reference marked thereon, which form a part of this specification.

The present invention relates to the processes for manufacturing illuminating-gas, as explained and set forth here. Up to now, it has always been found necessary to keep the constituent gases of water separated from each other from the point of production to the point of ignition, as hydrogen and oxygen being present in the proper proportions for a complete reunion, form a highly-explosive mixture. Consequently, the two gases have either been preserved in separate holders and only brought together at the point of ignition, or else the hydrogen alone has been saved and the oxygen to support combustion has been drawn from the open air, and the hydrogen gas thus obtained has been carburetted by itself by passing through a liquid hydrocarbon, which imparts luminosity to the flame.

I have discovered that the mixed gases obtained by the decomposition of water through electrolysis can be used with absolute safety if passed through a volatile hydrocarbon; and my invention consists of the new gas thus obtained, and the process described here for treating the gas mixture whereby it is rendered safe for use and storage under the same conditions as prevail in the use of ordinary coal-gas, and is transformed into a highly-luminiferous gas.

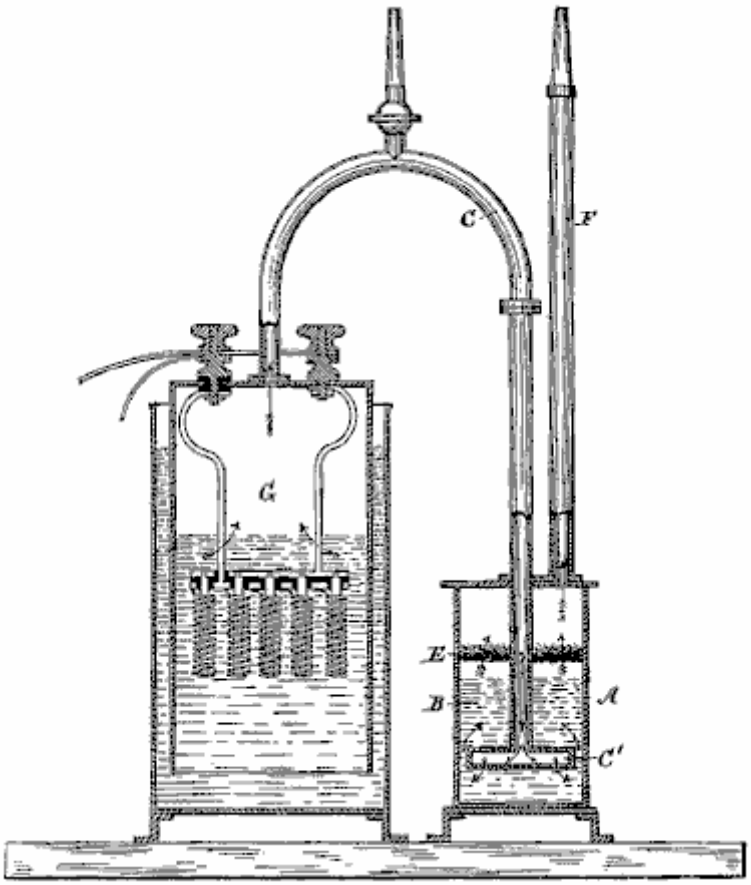

In the accompanying drawing, which shows in sectional elevation, an apparatus adapted to carry out my invention, **G** is a producer for generating the mixed gases, preferably by the decomposition of water by an electric current. **A** is a tank partly filled with turpentine, camphene or other hydrocarbon fluid as indicated by **B**. The two vessels are connected by the pipe **C**, the end of which terminates below the surface of the turpentine, and has a broad mouthpiece **C'**, with numerous small perforations, so that the gas rises through the turpentine in fine streams or bubbles in order that it may be brought intimately in contact with the hydrocarbon.

Above the surface of the turpentine there may be a diaphragm **E**, of wire netting or perforated sheet metal, and above this, a layer of wool or other fibre packed sufficiently tightly to catch all particles of the hydrocarbon fluid which may be mechanically held in suspension, but loose enough to allow free passage of the gases. The pipe **F**, conducts the mixed gases off directly to the burners or to a holder.

I am aware that the hydrocarbons have been used in the manufacturer of water-gas from steam, and, as stated above, hydrogen gas alone has been carburetted; but I am not aware of any attempt being made to treat the explosive mixed gases in this manner.

Experiments have demonstrated that the amount of turpentine or other volatile hydrocarbon taken up by the gases in this process is very small and that the consumption of the hydrocarbon does not appear to bear any fixed ratio to the volume of the mixed gases passed through it. I do not, however, attempt to explain the action of the hydrocarbon on the gases.

What I claim as my invention and desire to secure by Letters Patent, is -

The process described here of manufacturing gas, which consists in decomposing water by electrolysis and conjointly passing the mixed constituent gases of water thus obtained, through a volatile hydrocarbon, substantially as and for the purpose set forth.

In testimony whereof I affix my signature in presence of two witnesses.

HENRY M. PAINE

Witnesses:
Bennet Osborne, Jr.,
W. E. Redding

Henry Paine's apparatus would therefor be:

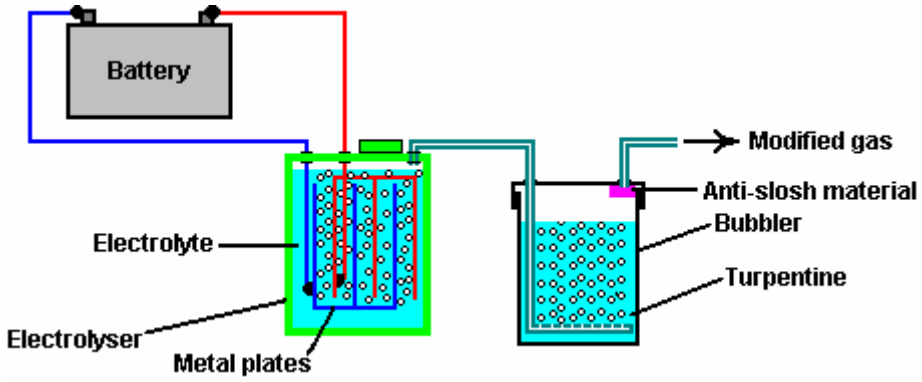

Boris Volfson's Space Drive

US Patent 6,960,975 Nov.1, 2005 Inventor: Boris Volfson

SPACE VEHICLE PROPELLED BY THE PRESSURE OF INFLATIONARY VACUUM STATE

ABSTRACT

A space vehicle propelled by the pressure of inflationary vacuum state is provided comprising a hollow superconductive shield, an inner shield, a power source, a support structure, upper and lower means for generating an electromagnetic field, and a flux modulation controller. A cooled hollow superconductive shield is energised by an electromagnetic field resulting in the quantised vortices of lattice ions projecting a gravitomagnetic field that forms a space-time curvature anomaly outside the space vehicle. The space-time curvature imbalance, the space-time curvature being the same as gravity, provides for the space vehicle's propulsion. The space vehicle, surrounded by the space-time anomaly, may move at a speed approaching the light-speed characteristic for the modified locale.

US Patent References:

3626605	Dec., 1971	Wallace.
3626606	Dec., 1971	Wallace.
3823570	Jul., 1974	Wallace.
5197279	Mar., 1993	Taylor.
6353311	Mar., 2002	Brainard et al.

Other References:

M.T. French, "To the Stars by Electromagnetic Propulsion", http://www.mtjf.demon.co.uk/antigravp2.htm#cforce.

Evgeny Podkletnov, "Weak Gravitational Shielding Properties of Composite Bulk $YBa_2Cu_33O_{(7-x)}$ Superconductor Below 70K Under E.M. Field", LANL database number cond-mat/9701074, v. 3, 10 pages, Sep. 16, 1997.

N. LI & D.G. Torr, "Effects of a Gravitomagnetic Field on Pure Superconductors", Physical Review, vol. 43, p. 457, 3 pages, Jan. 15, 1991.

Evgeny Podkletnov, Giovanni Modanese "Impulse Gravity Generator Based on Charged $YBa_2Cu_33O_{7-y}$ Superconductor with Composite Crystal Structure", arXiv.org/physics database, #0108005 vol. 2, 32 pages, 8 figures, Aug. 30, 2001.

S. Kopeikin & E. Fomalont, "General Relativistic Model for Experimental Measurement of the Speed of Propagation of Gravity by VLBI", Proceedings of the 6th European VLBI Network Symposium Jun. 25-28, 2002, Bonn, Germany, 4 pages.

Sean M. Carroll, "The Cosmological Constant", http://pancake.uchicago.edu/˜ carroll/encyc/, 6 pages.

Chris Y. Taylor and Giovanni Modanese, "Evaluation of an Impulse Gravity Generator Based Beamed Propulsion Concept", American Institute of Aeronautics and Astronautics, Inc., 2002.

Peter L. Skeggs, "Engineering Analysis of the Podkletnov Gravity Shielding Experiment", Quantum Forum, Nov. 7, 1997, http://www.inetarena'.com/˜ noetic/pls/podlev.html).

BACKGROUND OF THE INVENTION

The existence of a magnetic-like gravitational field has been well established by physicists for general relativity, gravitational theories, and cosmology. The consequences of the effect of electromagnetically-affected gravity could be substantial and have many practical applications, particularly in aviation and space exploration.

There are methods known for converting electromagnetism into a propulsive force that potentially generates a large propulsive thrust. According to these methods, the machine thrust is produced by rotating, reciprocating masses in the following ways: centrifugal thrust, momentum thrust, and impulse thrust. ("To the Stars by Electromagnetic Propulsion", M. T. French, http://www.mtjf.demon.co.uk/antigravp2.htm#cforce).

However, the electromagnetic propulsion in an ambient space, or space that is not artificially modified, is not practical for interstellar travel because of the great distances involved. No interstellar travel is feasible without some form of distortion of space. In turn, no alteration of space is possible without the corresponding deformation of time. Gravitomagnetic alteration of space, resulting in the space-time curvature anomaly that could propel the space vehicle, could be a feasible approach to future space travel.

In the late 1940s, H. B. G. Casimir proved that the vacuum is neither particle nor field-free. It is a source of zero-point-fluctuation (ZPF) of fields such as the vacuum gravitomagnetic field. ZPF fields lead to real, measurable physical consequences such as the Casimir force. The quantised hand-made electromagnetic processes, such as those occurring in superconductors, affect the similarly quantised ZPFs. The most likely reason is the electron-positron creation and annihilation, in part corresponding to the "polarisation effect" sited by Evgeny Podkletnov in explaining the gravitomagnetic effect reportedly observed by him in 1992. ("Weak Gravitational Shielding Properties of Composite Bulk $YBa_2Cu_33O_{(7-x)}$ Superconductor Below 70 K Under E.M. Field", Evgeny Podkletnov, LANL database number cond-mat/9701074, v. 3, 10 pages, 16 Sep. 1997).

The investigation of gravitomagnetism, however, started well before Podkletnov. In the U.S. Pat. No. 3,626,605, Henry Wm. Wallace describes an experimental apparatus for generating and detecting a secondary gravitational field. He also shows how a time-varying gravitomagnetic field can be used to shield the primary background of a gravitoelectric field.

In the U.S. Pat. No. 3,626,606, Henry Wm. Wallace provides a variation of his earlier experiment. A type III-V semiconductor material, of which both components have unpaired nuclear spin, is used as an electronic detector for the gravitomagnetic field. The experiment demonstrates that the material in his gravitomagnetic field circuit has hysterisis and remanence effects analogous to magnetic materials.

In the U.S. Pat. No. 3,823,570, Henry Wm. Wallace provides an additional variation of his experiment. Wallace demonstrates that, by aligning the nuclear spin of materials having an odd number of nucleons, a change in specific heat occurs.

In the U.S. Pat. No. 5,197,279, James R. Taylor discloses Electromagnetic Propulsion Engine where solenoid windings generate an electromagnetic field that, without the conversion into a gravitomagnetic field, generates the thrust necessary for the propulsion.

In the U.S. Pat. No. 6,353,311 B1, John P. Brainard et al. offer a controversial theory of Universal Particle Flux Field, and in order to prove it empirically, provide a shaded motor-type device. This device is also intended for extracting energy from this hypothetical Field.

In the early 1980s, Sidney Coleman and F. de Luca noted that the Einsteinean postulate of a homogeneous Universe, while correct in general, ignores quantised local fluctuation of the pressure of inflationary vacuum state, this fluctuation causing local cosmic calamities. While the mass-less particles propagate through large portions of Universe at light speed, these anomaly bubbles, depending on their low or high relative vacuum density, cause a local increase or decrease of the propagation values for these particles. Scientists disagree about the possibility, and possible ways, to artificially create models of such anomalies.

In the early 1990s, Ning Li and D. G Torr described a method and means for converting an electromagnetic field into a gravitomagnetic field. Li and Torr suggested that, under the proper conditions, the minuscule force fields of superconducting atoms can "couple", compounding in strength to the point where they can produce a repulsion force ("Effects of a Gravitomagnetic Field on Pure Superconductors", N. Li and D. G. Torr, Physical Review, Volume 43, Page 457, 3 pages, 15 Jan. 1991).

A series of experiments, performed in the early 1990s by Podkletnov and R. Nieminen, reportedly resulted in a reduction of the weights of objects placed above a levitating, rotating superconductive disk subjected to high frequency magnetic fields. These results substantially support the expansion of Einstainean physics offered by Li & Torr. Podkletnov and Giovanni Modanese have provided a number of interesting theories as to why the weight reduction effect could have occurred, citing quantum gravitational effects, specifically, a local change in the cosmological constant. The cosmological constant, under ordinary circumstances, is the same everywhere. But, according to Podkletnov and Modanese, above a levitating, rotating superconductive disk exposed to high frequency magnetic fields, it is modified. ("Impulse Gravity Generator Based on Charged $YBa_2Cu_33O_{7-y}$ Superconductor with Composite Crystal Structure", Evgeny Podkletnov, Giovanni Modanese, arXiv.org/physics database, #0108005 volume 2, 32 pages, 8 figures, Aug. 30, 2001).

In the July 2004 paper, Ning Wu hypothesised that exponential decay of the gravitation gauge field, characteristic for the unstable vacuum such as that created by Podkletnov and Nieminen, is at the root of the gravitational shielding effects (Gravitational Shielding Effects in Gauge Theory of Gravity, Ning Wu, arXiv:hep-th/0307225 v 1 23 Jul. 2003, 38 pages incl. 3 figures, July 2004).

In 2002, Edward Fomalont and Sergei Kopeikin measured the speed of propagation of gravity. They confirmed that the speed of propagation of gravity matches the speed of light. ("General Relativistic Model for Experimental Measurement of the Speed of Propagation of Gravity by VLBI", S. Kopeikin and E. Fomalont, Proceedings of the 6th European VLBI Network Symposium Jun. 25-28 2002, Bonn, Germany, 4 pages).

String theory unifies gravity with all other known forces. According to String theory, all interactions are carried by fundamental particles, and all particles are just tiny loops of space itself forming the space-time curvature. Gravity and bent space are the same thing, propagating with the speed of light characteristic of the particular curvature. In light of the Fomalont and Kopeikin discovery, one can conclude that if there is a change in the speed of propagation of gravity within the space-time curvature, then the speed of light within the locality would also be affected.

In general relativity, any form of energy affects the gravitational field, so the vacuum energy density becomes a potentially crucial ingredient. Traditionally, the vacuum is assumed to be the same everywhere in the Universe, so the vacuum energy density is a universal number. The cosmological constant Lambda is proportional to the vacuum pressure:

ρ_Λ: $\Lambda=(8\pi G/3c^2)\rho_\Lambda$

Where:
G is Newton's constant of gravitation and
c is the speed of light
("The Cosmological Constant", Sean M. Carroll, http://pancake.uchicago.edu/~carroll/encyc/, 6 pages). Newer theories, however, permit local vacuum fluctuations where even the "universal" constants are affected:

$\Lambda_1=(8\pi G_1/3c_1^2)\rho_{\Lambda_1}$

Analysing physics laws defining the cosmological constant, a conclusion can be drawn that, if a levitating, rotating superconductive disk subjected to high frequency magnetic fields affects the cosmological constant within a locality, it would also affect the vacuum energy density. According to the general relativity theory, the gravitational attraction is explained as the result of the curvature of space-time being proportional to the cosmological constant. Thus, the change in the gravitational attraction of the vacuum's subatomic particles would cause a local anomaly in the curvature of the Einsteinean space-time.

Time is the fourth dimension. Lorentz and Einstein showed that space and time are intrinsically related. Later in his life, Einstein hypothesised that time fluctuates both locally and universally. Ruggero Santilli, recognised for expanding relativity theory, has developed the isocosmology theory, which allows for variable rates of time. Time is also a force field only detected at speeds above light speed. The energy of this force field grows as its propagation speed declines when approaching light-speed. Not just any light-speed: the light-speed of a locale. If the conditions of the locale were modified, this change would affect the local time rate relative to the rate outside the affected locale, or ambient rate. The electromagnetically-generated gravitomagnetic field could be one such locale modifier.

Analysing the expansion of Einstainean physics offered by Li & Torr, one could conclude that gravity, time, and light speed could be altered by the application of electromagnetic force to a superconductor.

By creating a space-time curvature anomaly associated with lowered pressure of inflationary vacuum state around a space vehicle, with the lowest vacuum pressure density located directly in front of the vehicle, a condition could be created where gravity associated with lowered vacuum pressure density pulls the vehicle forward in modified space-time.

By creating a space-time curvature anomaly associated with elevated pressure of inflationary vacuum state around the space vehicle, with the point of highest vacuum pressure density located directly behind the vehicle, a condition could be created where a repulsion force associated with elevated vacuum pressure density pushes the space vehicle forward in modified space-time. From the above-mentioned cosmological constant equation, re-written as:

$$\rho_\Lambda = \frac{3c^2}{8\pi G}\Lambda$$

it is clear that the increase in the vacuum pressure density could lead to a substantial increase in the light-speed. If the space vehicle is moving in the anomaly where the local light-speed is higher than the light-speed of the ambient vacuum, and if this vehicle approaches this local light-speed, the space vehicle would then possibly exceed the light-speed characteristic for the ambient area.

The levitating and rotating superconductor disk, which Podkletnov used to protect the object of experiment from the attraction produced by the energy of the vacuum, was externally energised by the externally-powered solenoid

coils. Thus, Podkletnov's system is stationary by definition and not suitable for travel in air or space. Even if the superconductive disk is made part of the craft, and if it is energised by the energy available on the craft, the resulting anomaly is one-sided, not enveloping, and not providing the variable speed of light (VSL) environment for the craft.

In a recent (2002) article, Chris Y. Tailor and Modanese propose to employ an impulse gravity generator directing, from an outside location, an anomalous beam toward a spacecraft, this beam acting as a repulsion force field producing propulsion for the spacecraft. ("Evaluation of an Impulse Gravity Generator Based Beamed Propulsion Concept", Chris Y. Taylor and Giovanni Modanese, American Institute of Aeronautics and Astronautics, Inc., 2002, 21 pages, 10 figures). The authors of the article, however, didn't take into account the powerful quantised processes of field dispersion, which would greatly limit the distance of propagation of the repulsive force. At best, the implementation of this concept could assist in acceleration and deceleration at short distances from the impulse gravity generator, and only along a straight line of travel. If the travel goal is a space exploration mission rather than the shuttle-like commute, the proposed system is of little use.

Only a self-sufficient craft, equipped with the internal gravity generator and the internal energy source powering this generator, would have the flexibility needed to explore new frontiers of space. The modification of the space-time curvature all around the spacecraft would allow the spacecraft to approach the light-speed characteristic for the modified locale, this light-speed, when observed from a location in the ambient space, being potentially many times higher than the ambient light-speed. Then, under sufficient local energies, that is, energies available on the spacecraft, very large intergalactic distances could be reduced to conventional planetary distances.

In "The First Men in the Moon" (1903), H. G. Wells anticipates gravitational propulsion methods when he describes gravity repelling "cavorite." Discovered by Professor Cavor, the material acts as a "gravity shield" allowing Cavor's vehicle to reach the Moon. Prof. Cavor built a large spherical gondola surrounded on all sides by cavorite shutters that could be closed or opened. When Prof. Cavor closed all the shutters facing the ground and opened the shutters facing the moon, the gondola took off for the Moon.

Until today, no cavorite has been discovered. However, recent research in the area of superconductivity, nano materials and quantum state of vacuum, including that of Li, Torr, Podkletnov, and Modanese, has resulted in important new information about the interaction between a gravitational field and special states of matter at a quantum level. This new research opens the possibility of using new electromagnetically-energised superconductive materials allowing stable states of energy, the materials useful not only in controlling the local gravitational fields, but also in creating new gravitomagnetic fields.

BACKGROUND OF INVENTION: OBJECTS AND ADVANTAGES

There are four objects of this invention:

The first object is to provide a method for generating a pressure anomaly of inflationary vacuum state that leads to electromagnetic propulsion.

The second object is to provide a space vehicle capable of electromagnetically-generated propulsion. The implementation of these two objects leads to the development of the space vehicle propelled by gravitational imbalance with gravity pulling, and/or antigravity pushing, the space vehicle forward.

The third object is to provide a method for generating a pressure anomaly of inflationary vacuum state, specifically, the local increase in the level of vacuum pressure density associated with the greater curvature of space-time. The speed of light in such an anomaly would be higher than the speed of light in the ambient space.

The fourth object is to provide the space vehicle capable of generating an unequally-distributed external anomaly all around this vehicle, specifically the anomaly with the elevated level of vacuum pressure density. The anomaly is formed in such a way that gravity pulls the space vehicle forward in the modified space-time at a speed possibly approaching the light-speed specific for this modified locale. If the vacuum pressure density of the locale is modified to be substantially higher than that of the ambient vacuum, the speed of the vehicle could conceivably be higher than the ambient light-speed.

SUMMARY OF THE INVENTION

This invention concerns devices self-propelled by the artificially changed properties of the pressure of inflationary vacuum state to speeds possibly approaching the light-speed specific for this modified locale. Furthermore, this invention concerns devices capable of generating the space-time anomaly characterised by the elevated vacuum

pressure density. The devices combining these capabilities may be able to move at speeds substantially higher than the light-speed in the ambient space.

The device of this invention is a space vehicle. The outside shell of the space vehicle is formed by a hollow disk, sphere, or the like hollowed 3-dimensional shape made of a superconductor material, hereinafter a hollow superconductive shield. An inner shield is disposed inside the hollow superconductive shield. The inner shield is provided to protect crew and life-support equipment inside.

A support structure, upper means for generating an electromagnetic field and lower means for generating an electromagnetic field are disposed between the hollow superconductive shield and the inner shield. A flux modulation controller is disposed inside the inner shield to be accessible to the crew.

Electrical energy is generated in a power source disposed inside the hollow superconductive shield. The electrical energy is converted into an electromagnetic field in the upper means for generating an electromagnetic field and the lower means for generating an electromagnetic field.

Electrical motors, also disposed inside the hollow superconductive shield, convert the electrical energy into mechanical energy.

The mechanical energy and the electromagnetic field rotate the hollow superconductive shield, and the upper and the lower means for generating an electromagnetic field, against each other.

The electromagnetic field is converted into a gravitomagnetic field in the hollow superconductive shield.

The gravitomagnetic field, propagated outward, orthogonally to the walls of the hollow superconductive shield, forms a pressure anomaly of inflationary vacuum state in the area of propagation. The pressure anomaly of inflationary vacuum state is comprised of an area of relatively lower vacuum pressure density in front of the space vehicle and an area of relatively higher vacuum pressure density behind the vehicle.

The difference in the vacuum pressure density propels the space vehicle of this invention forward.

BRIEF DESCRIPTION OF THE DRAWINGS

Fig.1 is a cross-sectional view through the front plane taken along the central axis of a space vehicle provided by the method and device of this invention.

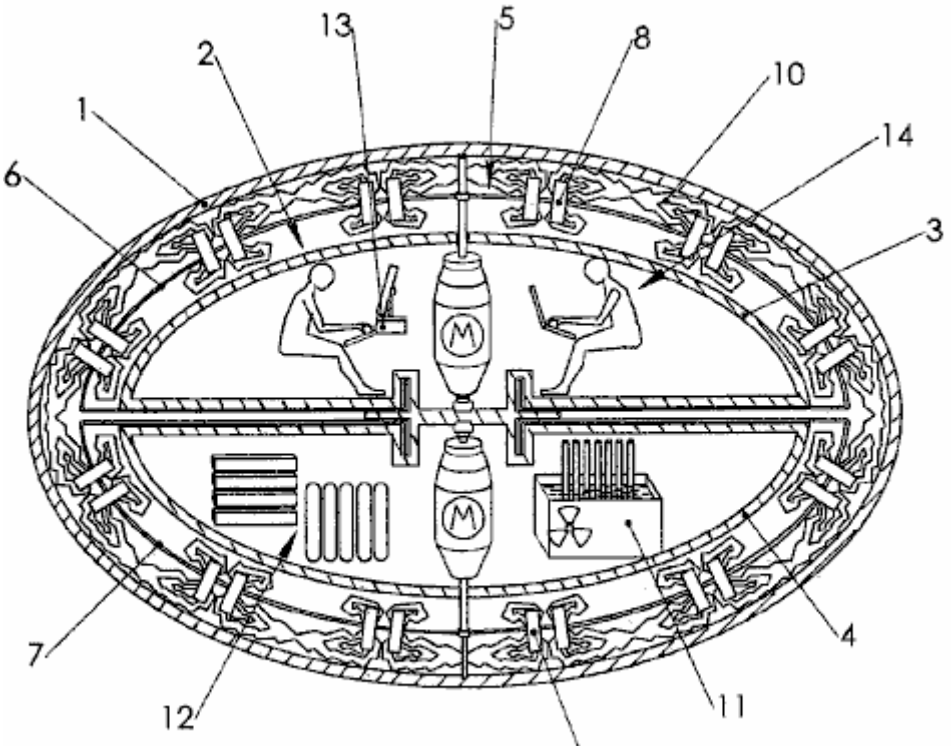

FIG. 1

Fig.2A and **Fig.2B** are diagrams, presented as perspective views, showing some of the physical processes resulting from a dynamic application of an electromagnetic field to a hollow superconductive shield. Only one line of quantised vortices, shown out of scale, is presented for illustration purposes.

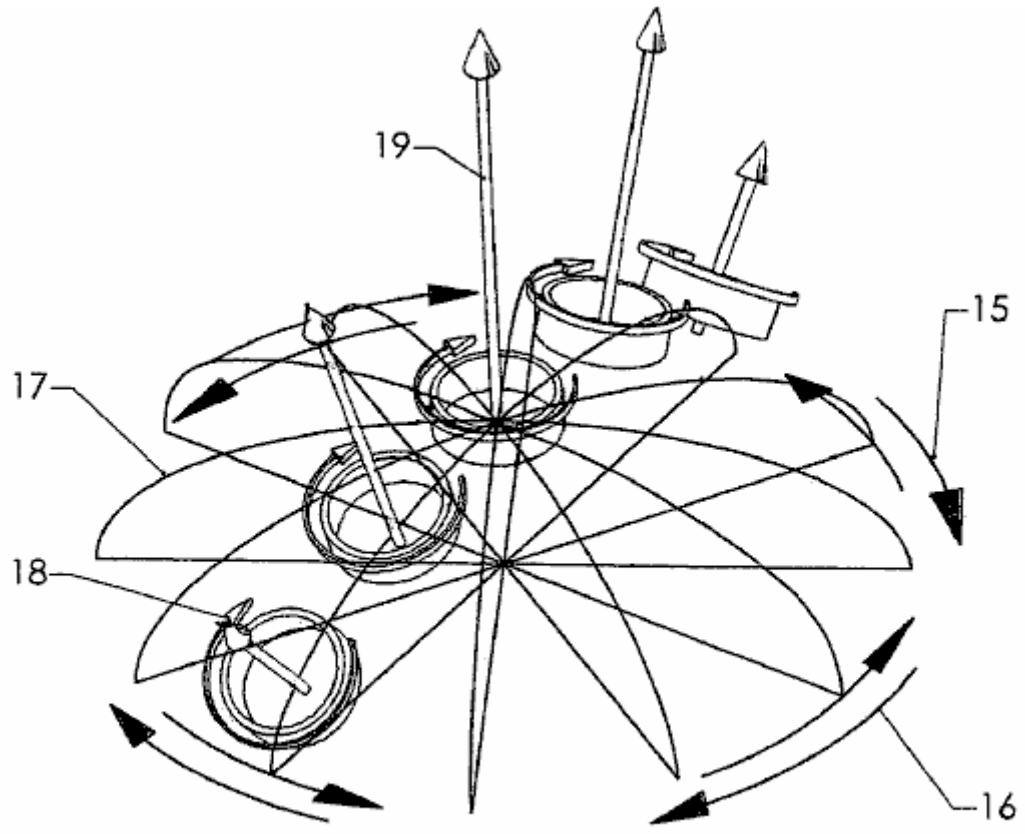

FIG. 2A

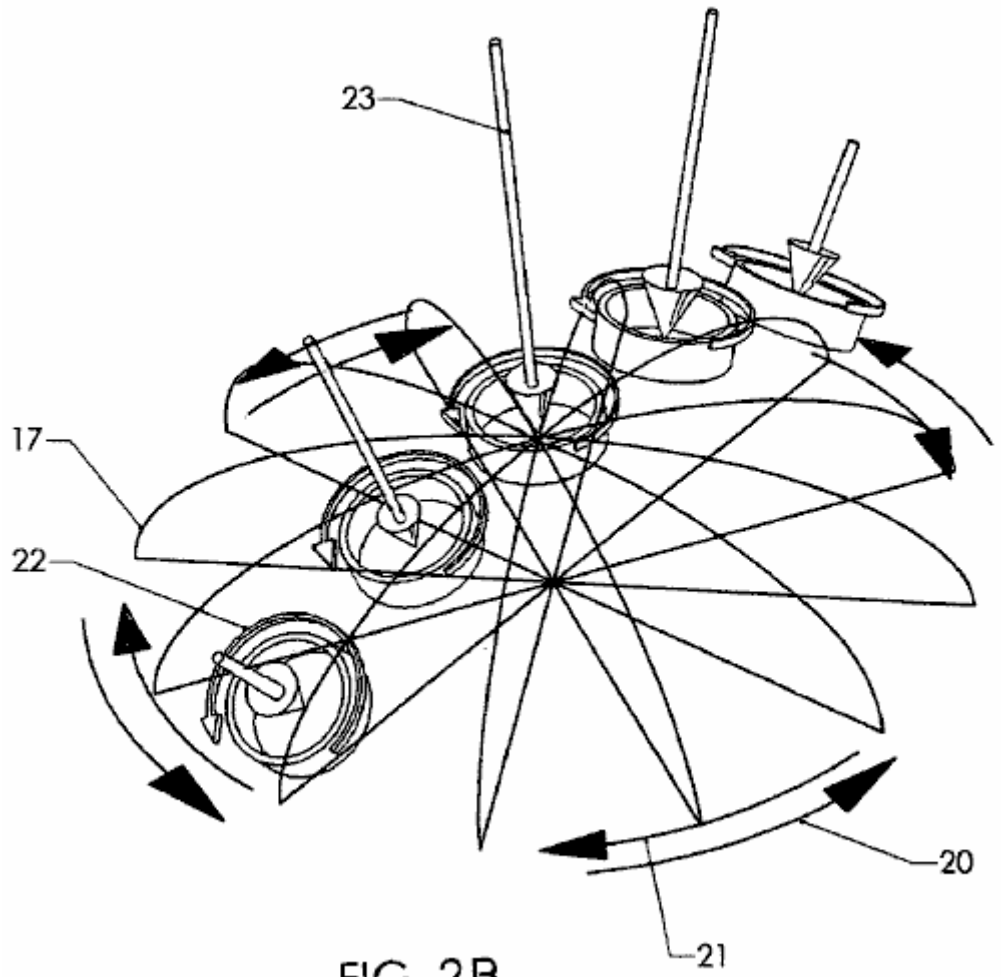

FIG. 2B

Fig.3A and **Fig.3B** are diagrams, presented as perspective views, showing a vacuum pressure density anomaly associated with lowered pressure of inflationary vacuum state and a vacuum pressure density anomaly associated with elevated pressure of inflationary vacuum state, respectively. Both anomalies are shown on the background of Universal curvature of inflationary vacuum state.

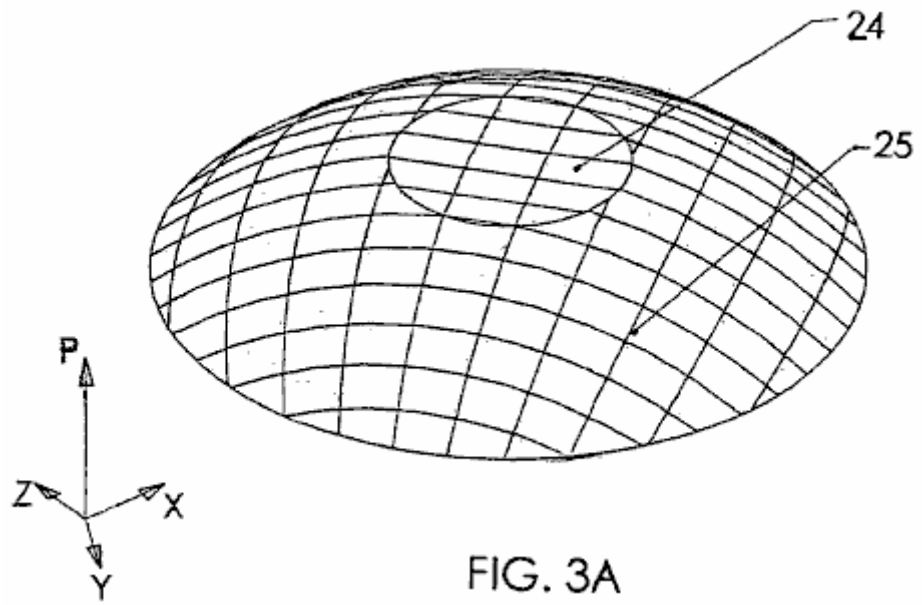

FIG. 3A

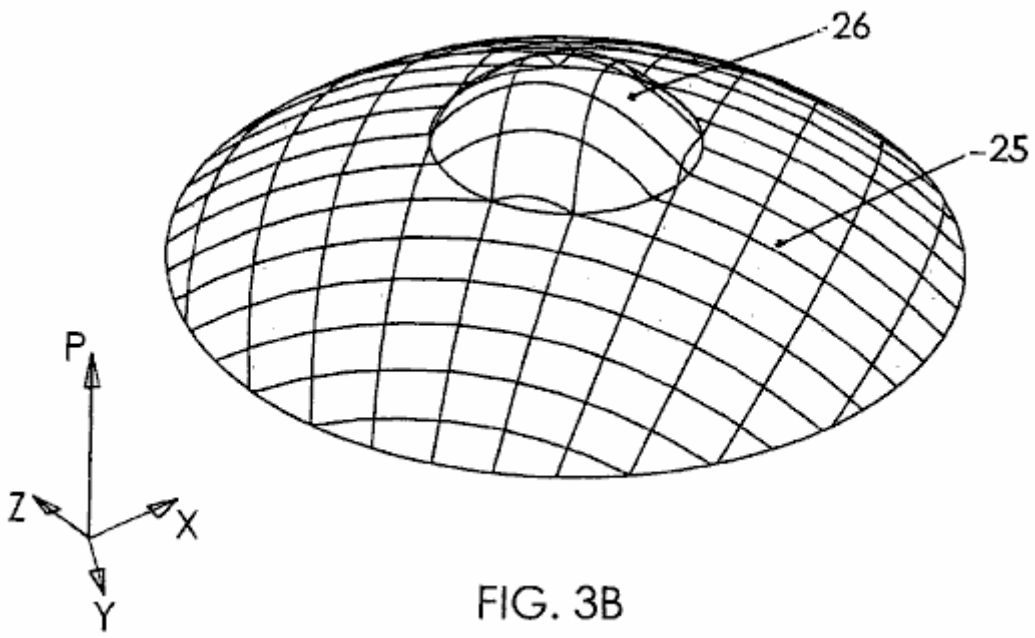

FIG. 3B

Fig.4A and **Fig.4B** are diagrams, presented as perspective views, showing a space-time anomaly associated with lowered pressure of inflationary vacuum state and a space-time anomaly associated with elevated pressure of inflationary vacuum state, respectively. Both anomalies are shown on the background of Universal space-time.

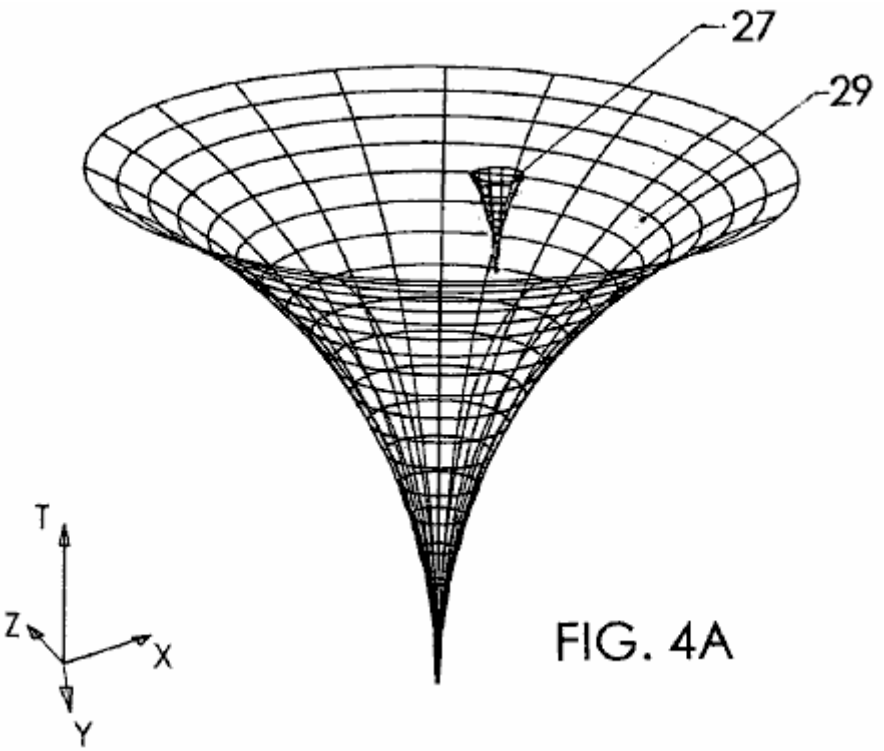

FIG. 4A

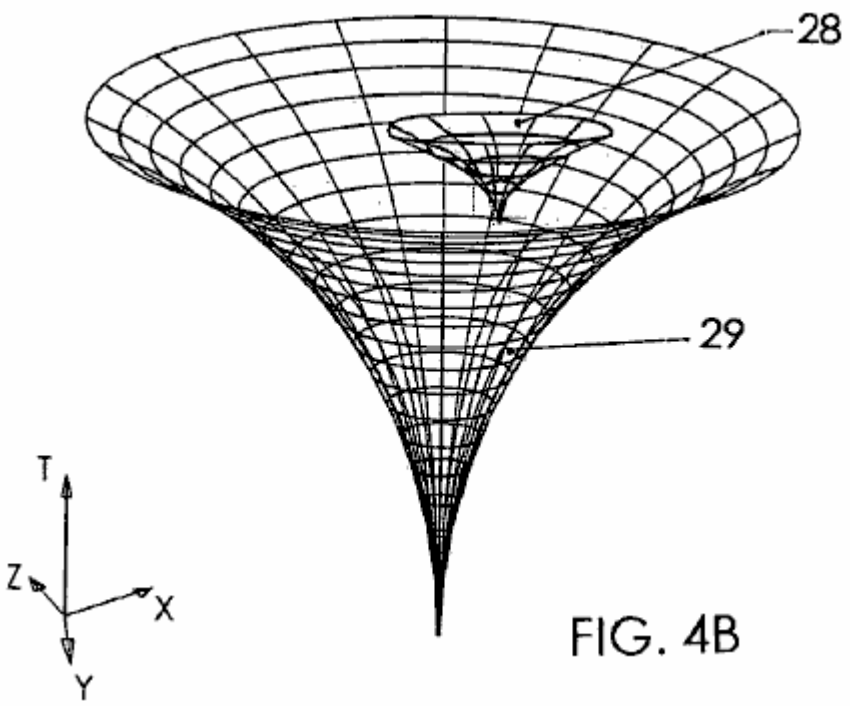

FIG. 4B

Figs.5A, 5B, 6, 7A, & 7B are diagrams of space-time curvature anomalies generated by the space vehicle of the current invention, these anomalies providing for the propulsion of the space vehicle.

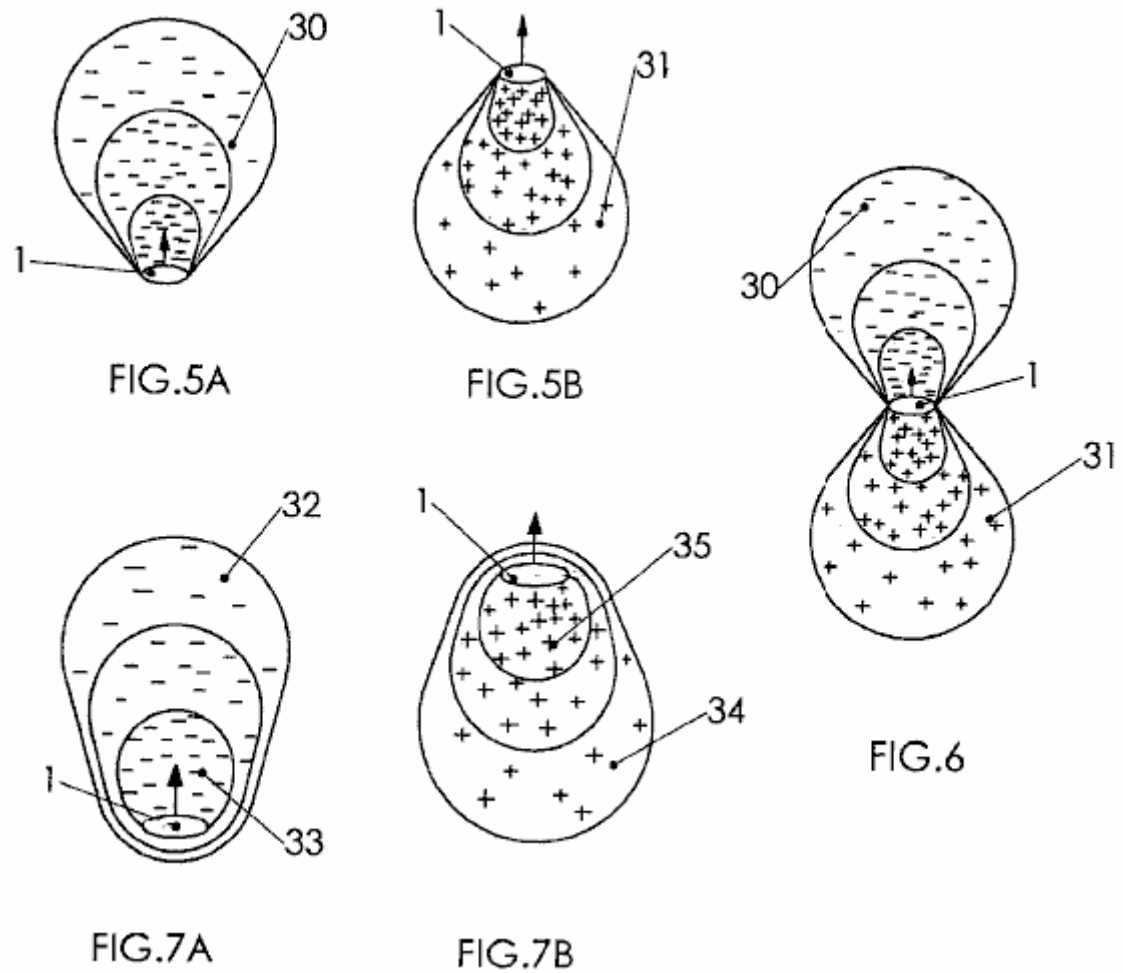

DRAWINGS—REFERENCE NUMERALS

#1 hollow superconductive shield
#2 inner shield
#3 upper shell
#4 lower shell
#5 support structure
#6 upper rotating element
#7 lower rotating element
#8 upper means for generating an electromagnetic field
#9 lower means for generating an electromagnetic field
#10 flux lines
#11 power source
#12 life-support equipment
#13 flux modulation controller
#14 crew
#15 clockwise shield motion vector
#16 counter-clockwise EMF motion vector
#17 wire grid
#18 clockwise quantised vortices of lattice ions
#19 outward gravitomagnetic field vector
#20 counter-clockwise shield motion vector
#21 clockwise EMF motion vector
#22 counter-clockwise quantised vortices of lattice ions
#23 inward gravitomagnetic field vector
#24 vacuum pressure density anomaly associated with lowered pressure of inflationary vacuum state
#25 Universal curvature of inflationary vacuum state
#26 vacuum pressure density anomaly associated with elevated pressure of inflationary vacuum state
#27 space-time anomaly associated with lowered pressure of inflationary vacuum state
#28 space-time anomaly associated with elevated pressure of inflationary vacuum state
#29 Universal space-time
#30 substantially droplet-shaped space-time curvature anomaly associated with lowered pressure of inflationary vacuum state
#31 substantially droplet-shaped space-time anomaly associated with elevated pressure of inflationary vacuum state
#32 substantially egg-shaped space-time anomaly associated with lowered pressure of inflationary vacuum state
#33 area of the lowest vacuum pressure density
#34 substantially egg-shaped space-time anomaly associated with elevated pressure of inflationary vacuum state
#35 area of the highest vacuum pressure density

DESCRIPTION OF THE PRESENTLY PREFERRED EMBODIMENT

Fig.1 is a cross-sectional view through the front plane taken along the central axis of a space vehicle provided by the method and device of this invention. A hollow superconductive shield 1 forms a protective outer shell of the space vehicle. The hollow superconductive shield 1 may be shaped as a hollow disk, sphere, or the like 3-dimensional geometrical figure formed by the 2-dimensional rotation of a curve around the central axis.

In the preferred embodiment, the hollow superconductive shield 1 is made of a superconductor such as $YBa_2Cu_33O_{7-y}$, or a like high-temperature superconductor with a composite crystal structure cooled to the temperature of about 40^0K. Those skilled in the art may envision the use of many other low and high temperature superconductors, all within the scope of this invention.

An inner shield **2** is disposed inside the hollow superconductive shield **1**. The inner shield **2** is comprised of an upper shell **3** and a lower shell **4**, the shells **3** and **4** adjoined with each other. Executed from insulation materials such as foamed ceramics, the inner shield **2** protects the environment within the shield from the electromagnetic field and severe temperatures.

A support structure **5** is disposed between the hollow superconductive shield **1** and the inner shield **2**, concentric to the hollow superconductive shield. The support structure **5** is comprised of an upper rotating element **6** and a lower rotating element **7**.

The upper rotating element **6** is pivotably disposed inside the hollow superconductive shield **1** and may envelope the upper shell **3**. The lower rotating element **7** is pivotably disposed inside the hollow superconductive shield **1**

and may envelope the lower shell **4**. Even though the preferred embodiment has two rotating elements, those skilled in the art may envision only one rotating element, or three or more rotation elements, all within the scope of this invention.

Upper means for generating an electromagnetic field **8** are disposed between the hollow superconductive shield **1** and the upper shell **3**. The upper means for generating an electromagnetic field **8** are fixed to the upper rotating element **6** at an electromagnetic field-penetrable distance to the hollow superconductive shield **1**.

Lower means for generating an electromagnetic field **9** are disposed between the hollow superconductive shield **1** and the lower shell **4**. The lower means for generating an electromagnetic field **9** are fixed to the lower rotating element **7** at an electromagnetic field-penetrable distance to the hollow superconductive shield **1**.

The upper means for generating an electromagnetic field **8** and the lower means for generating an electromagnetic field **9** could be solenoid coils or electromagnets. In the process of operation of the space vehicle, the electromagnetic field identified by flux lines **10**, is controllably and variably applied to the hollow superconductive shield **1**.

Electric motors are disposed inside the hollow superconductive shield along its central axis.

A power source **11** is disposed inside the hollow superconductive shield **1** and may be disposed inside the lower shell **4**. The power source **11** is electrically connected with the upper means for generating an electromagnetic field **8**, the lower means for generating an electromagnetic field **9**, and the electric motors. The upper means for generating an electromagnetic field **8**, the lower means for generating an electromagnetic field **9**, and the electric motors provide for the rotation of the upper rotating element **6** and the lower rotating element **7**. The power source **11** may be a nuclear power generator.

Life-support equipment **12** is disposed inside the inner shield **2**, and may be disposed inside the lower shell **4**. The life-support equipment **12** may include oxygen, water, and food.

A flux modulation controller **13** is disposed inside the inner shield **2**, and may be disposed inside the upper shell **3**. The flux modulation controller **13** is in communication with the upper means for generating an electromagnetic field **8**, the lower means for generating an electromagnetic field **9**, the power source **11**, and the electric motors.

The flux modulation controller **8** may be executed as a computer or a microprocessor. The flux modulation controller **8** is provided with a capability of modulating the performance parameters of the upper means for generating an electromagnetic field **8**, the lower means for generating an electromagnetic field **9**, the power source **11**, and the electric motors.

A crew **14** may be located inside the upper shell **3** of the inner shield **2** and may consist of one or more astronauts. The crew has a free access to the life-support equipment **12** and the flux modulation controller **8**. A person skilled in the art, may envision a fully-automated, pilotless craft, which is also within the scope of this invention.

A person skilled in the art, may also envision the embodiment (not shown), also within the scope of this invention, where the hollow superconductive shield is pivotable, and the support structure with the means for generating an electromagnetic field is affixed on the outside of the inner shield.

Fig.2A and **Fig.2B** are diagrams showing the results of the quantised electromagnetic turbulence within the superconductive shell of the hollow superconductive shield provided by the relative rotational motion of the hollow superconductive shield against the upper means for generating an electromagnetic field.

Fig.2A shows the clockwise relative rotational motion of the hollow superconductive shield, this motion identified by a clockwise shield motion vector **15**, and the counter-clockwise relative rotational motion of upper means for generating an electromagnetic field, this motion identified by a counter-clockwise EMF motion vector **16**.

The electromagnetic field, controllably and variably applied by the upper means for generating an electromagnetic field, whose various positions are identified by a wire grid **17**, to the hollow superconductive shield (not shown), causes quantised electromagnetic turbulence within the hollow superconductive shield. This turbulence is represented by a plurality of clockwise quantised vortices of lattice ions **18**. Only one line of the clockwise quantised vortices of lattice ions **18**, (not to scale), is shown for illustration purposes only. Each of the clockwise quantised vortices of lattice ions **18** generates a gravitomagnetic field identified by an outward gravitomagnetic field vector **19** directed orthogonally away from the hollow superconductive shield.

Fig.2B shows the counter-clockwise relative rotational motion of the hollow superconductive shield, this motion identified by a counter-clockwise shield motion vector **20**, and the clockwise relative rotational motion of upper means for generating an electromagnetic field, this motion identified by a clockwise EMF motion vector **21**.

The electromagnetic field, controllably and variably applied by the upper means for generating an electromagnetic field identified by the wire grid **17**, to the hollow superconductive shield (not shown), causes quantised electromagnetic turbulence within the hollow superconductive shield, this turbulence represented by a plurality of counter-clockwise quantised vortices of lattice ions **22**. Only one line of the counter-clockwise quantised vortices of lattice ions **22**, (not to scale), is shown for illustration purposes only. Each of the counter-clockwise quantised vortices of lattice ions **22** generates a gravitomagnetic field identified by an inward gravitomagnetic field vector **23** directed orthogonally toward the hollow superconductive shield.

The electrical requirements for providing the Li-Torr effect are as follows:

Podkletnov has reported using the high frequency current of 105 Hz. He also used 6 solenoid coils @ 850 Gauss each. The reported system's efficiency reached 100% and the total field in the Podkletnov's disk was about 0.5 Tesla. The maximum weight loss reported by Podkletnov was 2.1%.

The preferred embodiment of the device of current invention is capable of housing 2-3 astronauts and therefore is envisioned to be about 5 meters in diameter at the widest point. The preferred space vehicle's acceleration is set at 9.8 m/s/s providing that gravity on board is similar to that on the surface of Earth.

The means for generating an electromagnetic field may be comprised of 124 solenoid coils. At the same 100% efficiency reported by Podkletnov, the total field required providing the acceleration of 9.8 m/s/s is 5,000 Tesla, or about 40 Tesla per coil. Skeggs suggests that on the Podkletnov device, out of 850 Gauss developed on the coil surface, the field affecting the superconductor and causing the gravitomagnetism is only 400 Gauss ("Engineering Analysis of the Podkletnov Gravity Shielding Experiment, Peter L. Skeggs, Quantum Forum, Nov. 7, 1997, http://www.inetarena.com/~noetic/pls/podlev.html, 7 pages). This translates into 47% device efficiency.

In this 47%-efficient space vehicle, the total field required achieving the 9.8 m/s/s acceleration is about 10,600 Tesla, or 85.5 Tesla per each of 124 solenoid coils. It must be noted that at this acceleration rate, it would take nearly a year for the space vehicle to reach the speed of light.

It also must be noted that Skeggs has detected a discrepancy between the Li-Torr estimates and Podkletnov's practical results. If Podkletnov's experimental results are erroneous while the Li-Torr estimates are indeed applicable to the space vehicle of this invention, then the energy requirements for achieving the sought speed would be substantially higher than the above estimate of 10,600 Tesla.

Podkletnov has concluded that, in order for the vacuum pressure density anomaly to take place, the Earth-bound device must be in the condition of Meissner levitation. As are all space bodies, the space vehicle is a subject to the pressure inflationary vacuum state and the gravitational force, which, within the migrating locality of the expanding Universe, in any single linear direction, are substantially in equilibrium. Thus, for the space vehicle, the requirement of Meissner levitation is waved.

The propagation of the gravitomagnetic field identified by the outward gravitomagnetic field vector **19** and the inward gravitomagnetic field vector **23** would cause exotic quantised processes in the vacuum's subatomic particles that include particle polarisation, ZPF field defects, and the matter-energy transformation per $E=mc^2$. The combination of these processes would result in the gravitational anomaly. According to the general relativity theory, gravitational attraction is explained as the result of the curvature of space-time being proportional to the gravitational constant. Thus, the change in the gravitational attraction of the vacuum's subatomic particles would cause a local anomaly in the curvature of the Einsteinean space-time.

Gravity is the same thing as bent space, propagating with the speed of light characteristic for the particular space-time curvature. When bent space is affected, there is a change in the speed of propagation of gravity within the space-time curvature anomaly. The local speed of light, according to Fomalont and Kopeikin always equal to the local speed of propagation of gravity, is also affected within the locality of space-time curvature anomaly.

Creation of space-time curvature anomalies adjacent to, or around, the space vehicle, these anomalies characterised by the local gravity and light-speed change, has been the main object of this invention.

Fig.3A shows a diagram of a vacuum pressure density anomaly associated with lowered pressure of inflationary vacuum state **24** on the background of Universal curvature of inflationary vacuum state **25**. The vacuum pressure density anomaly associated with lowered pressure of inflationary vacuum state **24** is formed by a multitude of the inward gravitomagnetic field vectors. According to the cosmological constant equation,

ρ_Λ: $\Lambda=(8\pi G/3c^2)\rho_\Lambda$

where:

The cosmological constant Lambda, is proportional to the vacuum energy pressure rho-lambda, G is Newton's constant of gravitation, and c is the speed of light, so the curvature of space-time is proportional to the gravitational constant. According to the general relativity theory, the change in the vacuum pressure density is proportional to the change in the space-time curvature anomaly. By replacing rho-lambda with the vacuum pressure density, P times the vacuum energy coefficient kappa, and replacing c with:

delta-distance/delta-time, we derive to the equation:

$$\Lambda=[8\pi G/3(\Delta\text{distance}/\Delta\text{time})^2]P_\kappa$$

and can now construct a vacuum pressure density curvature diagram.

The vacuum pressure density curvature anomaly associated with lowered pressure of inflationary vacuum state **24** is shown here as a flattened surface representing the lowered pressure of the inflationary vacuum state. This anomaly is the result of the exotic quantised processes in the subatomic particles caused by the quantised turbulence occurring in the hollow superconductive shield. The XYZ axes represent three dimensions of space and the P axis represents the vacuum pressure density.

Fig.3B shows a diagram of a vacuum pressure density anomaly associated with elevated pressure of inflationary vacuum state **26** on the background of the Universal curvature of inflationary vacuum state **25**. The vacuum pressure density anomaly associated with elevated pressure of inflationary vacuum state **26** is formed by a multitude of the outward gravitomagnetic field vectors. The anomaly is shown here as a convex surface representing the elevated pressure of inflationary vacuum state. The diagrams of **Fig.3A** and **Fig.3B** are not to scale with the anomaly sizes being exaggerated for clarity.

Fig.4A and **Fig.4B** show diagrams of a space-time anomaly associated with lowered pressure of inflationary vacuum state **27**, and a space-time anomaly associated with elevated pressure of inflationary vacuum state **28**, respectively, each on the background a diagram of Universal space-time **29**.

The quaterised Julia set $Q_{n+1} = Q_n^2 + C_0$ is assumed to be an accurate mathematical representation of the Universal space-time. The generic quaternion Q_0 belongs to the Julia set associated with the quaternion C, and n tends to infinity. If we assume that the quaternion value C_0 is associated with the Universal space-time **29**, C_1 is the value of quaternion C for the space-time anomaly associated with lowered pressure of inflationary vacuum state **27**, and C_2 is the value of quaternion C for the space-time anomaly associated with elevated pressure of inflationary vacuum state **28**, then we can construct two diagrams.

The diagram of **Fig.4A** shows the space-time anomaly associated with lowered pressure of inflationary vacuum state **27** as a quaterised Julia set contained in a 4-dimensional space: $Q_{n+1} = Q_n^2 + C_1$ on the background of the Universal space-time **29** represented by $Q_{n+1} = Q_n^2 + C_0$.

The diagram of **Fig.4B** shows the space-time anomaly associated with elevated pressure of inflationary vacuum state **28** as a quaterised Julia set $Q_{n+1} = Q_n^2 + C_2$, also on the background of the Universal space-time **29** represented by $Q_{n+1} = Q_n^2 + C_0$. On both diagrams, the XYZ axes represent three dimensions of space, and the T axis represents time. The diagrams are not to scale: the anomaly sizes are exaggerated for clarity, and the halves of quaterised Julia sets, conventionally associated with the hypothetical Anti-Universe, are omitted.

Figs. 5A, 5B, 6, 7A, & 7B show simplified diagrams of space-time curvature anomalies generated by the space vehicle of the current invention, these anomalies providing for the propulsion of the space vehicle. In each case, the pressure anomaly of inflationary vacuum state is comprised of an area of relatively lower vacuum pressure density in front of the space vehicle and an area of relatively higher vacuum pressure density behind the space vehicle. Because the lower pressure of inflationary vacuum state is associated with greater gravity and the higher pressure is associated with the higher repulsive force, the space vehicle is urged to move from the area of relatively higher vacuum pressure density toward the area of relatively lower vacuum pressure density.

Fig.5A illustrates the first example of space-time curvature modification. This example shows a substantially droplet-shaped space-time curvature anomaly associated with lowered pressure of inflationary vacuum state **30** adjacent to the hollow superconductive shield **1** of the space vehicle. The anomaly **30** is provided by the propagation of a gravitomagnetic field radiating orthogonally away from the front of the hollow superconductive shield **1**. This gravitomagnetic field may be provided by the relative clockwise motion of the upper means for generating an electromagnetic field, and relative counterclockwise motion of the hollow superconductive field, as observed from above the space vehicle.

In this example, the difference between the space-time curvature within the substantially droplet-shaped space-time anomaly associated with lowered pressure of inflationary vacuum state, and the ambient space-time curvature, the space-time curvature being the same as gravity, results in the gravitational imbalance, with gravity pulling the space vehicle forward.

Fig.5B illustrates the second example of space-time curvature modification. This example shows a substantially droplet-shaped space-time anomaly associated with elevated pressure of inflationary vacuum state **31** adjacent to the hollow superconductive shield **1** of the space vehicle. The anomaly **31** is provided by the propagation of a gravitomagnetic field radiating orthogonally away from the back of the hollow superconductive shield. This gravitomagnetic field may be provided by the relative counter-clockwise motion of the lower means for generating an electromagnetic field, and relative clockwise motion of the hollow superconductive field, as observed from below the space vehicle.

In this example, the difference between the space-time curvature within the substantially droplet-shaped space-time anomaly associated with elevated pressure of inflationary vacuum state, and the ambient space-time curvature, the space-time curvature being the same as gravity, results in the gravitational imbalance, with the repulsion force pushing the space vehicle forward.

Fig.6 illustrates the third example of space-time curvature modification. This example shows the formation of the substantially droplet-shaped space-time anomaly associated with lowered pressure of inflationary vacuum state **30** combined with the substantially droplet-shaped space-time anomaly associated with elevated pressure of inflationary vacuum state **31**. This combination of anomalies may be provided by the relative clockwise motion of the upper means for generating an electromagnetic field and relative clockwise motion of the hollow superconductive field, combined with the relative clockwise motion of the lower means for generating an electromagnetic field, as observed from above the space vehicle.

In this example, the difference between the space-time curvature within the substantially droplet-shaped space-time anomaly associated with lowered pressure of inflationary vacuum state, and the space-time curvature of the substantially droplet-shaped space-time anomaly associated with elevated pressure of inflationary vacuum state, the space-time curvature being the same as gravity, results in the gravitational imbalance, with gravity pulling, and the repulsion force pushing, the space vehicle forward.

Fig.7A illustrates the fourth example of space-time curvature modification. This example shows the formation of a substantially egg-shaped space-time anomaly associated with lowered pressure of inflationary vacuum state **32** around the hollow superconductive shield **1** of the space vehicle. The anomaly **32** is provided by the propagation of gravitomagnetic field of unequally-distributed density, this gravitomagnetic field radiating in all directions orthogonally away from the hollow superconductive shield. The propagation of the unequally-distributed gravitomagnetic field leads to the similarly unequally-distributed space-time curvature anomaly. This unequally-distributed gravitomagnetic field may be provided by the relatively faster clockwise motion of the upper means for generating an electromagnetic field relative to the hollow superconductive field, combined with the relatively slower counter-clockwise motion of the lower means for generating an electromagnetic field, as observed from above the space vehicle.

An area of the lowest vacuum pressure density **33** of the substantially egg-shaped space-time anomaly associated with lowered pressure of inflationary vacuum state **32** is located directly in front of the space vehicle.

In this example, the variation in the space-time curvature within the substantially egg-shaped space-time anomaly associated with lowered pressure of inflationary vacuum state, the space-time curvature being the same as gravity, results in a gravitational imbalance, with gravity pulling the space vehicle forward in modified space-time.

Fig.7B illustrates the fifth example of space-time curvature modification, also with the purpose of providing for a propulsion in modified space-time. This example shows the formation of a substantially egg-shaped space-time anomaly associated with elevated pressure of inflationary vacuum state **34** around the hollow superconductive shield 1 of the space vehicle. The anomaly **34** is provided by the propagation of gravitomagnetic field of unequally-distributed density, this gravitomagnetic field radiating in all directions orthogonally away from the hollow superconductive shield. The propagation of the unequally-distributed gravitomagnetic field leads to the similarly unequally-distributed space-time curvature anomaly. This unequally-distributed gravitomagnetic field may be provided by the relatively slower counter-clockwise motion of the upper means for generating an electromagnetic field relative to the hollow superconductive field, combined with the relatively faster clockwise motion of the lower means for generating an electromagnetic field, as observed from above the space vehicle.

An area of the highest vacuum pressure density **35** of the substantially egg-shaped space-time anomaly associated with elevated pressure of inflationary vacuum state **34** is located directly behind the space vehicle.

In this example, the variation in the space-time curvature within the substantially egg-shaped space-time anomaly associated with elevated pressure of inflationary vacuum state, the space-time curvature being same as gravity, results in a gravitational imbalance, with the repulsion force pushing the space vehicle forward in modified space-time at speeds approaching the light-speed characteristic for this modified area. This light-speed might be much higher than the light-speed in the ambient space.

By creating alternative anomalies and modulating their parameters, the space vehicle's crew would dilate and contract time and space on demand. The space vehicle, emitting a vacuum pressure modifying, controllably-modulated gravitomagnetic field in all directions, would rapidly move in the uneven space-time anomaly it created, pulled forward by gravity or pushed by the repulsion force. The time rate zone of the anomaly is expected to have multiple quantised boundaries rather than a single sudden boundary affecting space and time in the immediate proximity of the vehicle. Speed, rate of time, and direction in space could be shifted on demand and in a rapid manner. The modulated light-speed could make the space vehicle suitable for interstellar travel. Because of the time rate control in the newly created isospace, the accelerations would be gradual and the angles of deviation would be relatively smooth. The gravity shielding would further protect pilots from the ill-effects of gravity during rapid accelerations, directional changes, and sudden stops.

****

If you find the thought of generating a gravitational field, difficult to come to terms with, then consider the work of Henry Wallace who was an engineer at General Electric about 25 years ago, and who developed some incredible inventions relating to the underlying physics of the gravitational field. Few people have heard of him or his work. Wallace discovered that a force field, similar or related to the gravitational field, results from the interaction of relatively moving masses. He built machines which demonstrated that this field could be generated by spinning masses of elemental material having an odd number of nucleons -- i.e. a nucleus having a multiple half-integral value of h-bar, the quantum of angular momentum. Wallace used bismuth or copper material for his rotating bodies and "kinnemassic" field concentrators.

Aside from the immense benefits to humanity which could result from a better understanding of the physical nature of gravity, and other fundamental forces, Wallace's inventions could have enormous practical value in countering gravity or converting gravitational force fields into energy for doing useful work. So, why has no one heard of him? One might think that the discoverer of important knowledge such as this would be heralded as a great scientist and nominated for dynamite prizes. Could it be that his invention does not work? Anyone can get the patents. Study them -- Wallace -- General Electric -- detailed descriptions of operations -- measurements of effects -- drawings and models -- it is authentic. If you are handy with tools, then you can even build it yourself. It does work.

Henry was granted two patents in this field:
US Patent #3626605 -- "Method and Apparatus for Generating a Secondary Gravitational Force Field", Dec 14, 1971 and

US Patent #3626606 -- "Method and Apparatus for Generating a Dynamic Force Field", Dec 14, 1971. He was also granted US Patent #3823570 -- "Heat Pump" (based on technology similar to the above two inventions), July 16, 1973.

These patents can be accessed via http://www.freepatentsonline.com

The First High MPG Carburettor of Charles Pogue

US Patent 642,434 12th November 1932 Inventor: Charles N. Pogue

CARBURETTOR

This patent describes a carburettor design which was able to produce very high mpg figures using the gasoline available in the USA in the 1930s but which is no longer available as the oil industry does not want functional high mpg carburettors to be available to the public.

DESCRIPTION

This invention relates to a device for obtaining an intimate contact between a liquid in a vaporous state and a gas, and particularly to such a device which may serve as a carburettor for internal combustion engines.

Carburettors commonly used for supplying a combustible mixture of air and liquid fuel to internal combustion engines, comprise a bowl in which a supply of the fuel is maintained in the liquid phase and a fuel jet which extends from the liquid fuel into a passage through which air is drawn by the suction of the engine cylinders. On the suction, or intake stroke of the cylinders, air is drawn over and around the fuel jet and a charge of liquid fuel is drawn in, broken up and partially vaporised during its passage to the engine cylinders. However, I have found that in such carburettors, a relatively large amount of the atomised liquid fuel is not vaporised and enters the engine cylinder in the form of microscopic droplets. When such a charge is ignited in the engine cylinder, only that portion of the liquid fuel which has been converted into the vaporous (molecular) state, combines with the air to give an explosive mixture. The remaining portion of the liquid fuel which is drawn into the engine cylinders and remains in the form of small droplets, does not explode and impart power to the engine, but burns with a flame and raises the temperature of the engine above that at which the engine operates most efficiently, i.e. 160° to 180° F.

According to this invention, a carburettor for internal combustion engines is provided in which substantially all of the liquid fuel entering the engine cylinder will be in the vapour phase and consequently, capable of combining with the air to form a mixture which will explode and impart a maximum amount of power to the engine, and which will not burn and unduly raise the temperature of the engine.

A mixture of air and liquid fuel in truly vapour phase in the engine cylinder is obtained by vaporising all, or a large portion of the liquid fuel before it is introduced into the intake manifold of the engine. This is preferably done in a vaporising chamber, and the “dry” vaporous fuel is drawn from the top of this chamber into the intake manifold on the intake or suction stroke of the engine. The term “dry” used here refers to the fuel in the vaporous phase which is at least substantially free from droplets of the fuel in the liquid phase, which on ignition would burn rather than explode.

More particularly, the invention comprises a carburettor embodying a vaporising chamber in the bottom of which, a constant body of liquid fuel is maintained, and in the top of which there is always maintained a supply of “dry” vaporised fuel, ready for admission into the intake manifold of the engine. The supply of vaporised liquid fuel is maintained by drawing air through the supply of liquid fuel in the bottom of the vaporising chamber, and by constantly atomising a portion of the liquid fuel so that it may more readily pass into the vapour phase. This is preferably accomplished by a double-acting suction pump operated from the intake manifold, which forces a mixture of the liquid fuel and air against a plate located within the chamber. To obtain a more complete vaporisation of the liquid fuel, the vaporising chamber and the incoming air are preferably heated by the exhaust gasses from the engine. The carburettor also includes means for initially supplying a mixture of air and vaporised fuel so that starting the engine will not be dependent on the existence of a supply of fuel vapours in the vaporising chamber.

The invention will be further described in connection with the accompanying drawings, but this further disclosure and description is to be taken as an exemplification of the invention and the same is not limited thereby except as is pointed out in the claims.

Fig.1 is an elevational view of a carburettor embodying my invention.

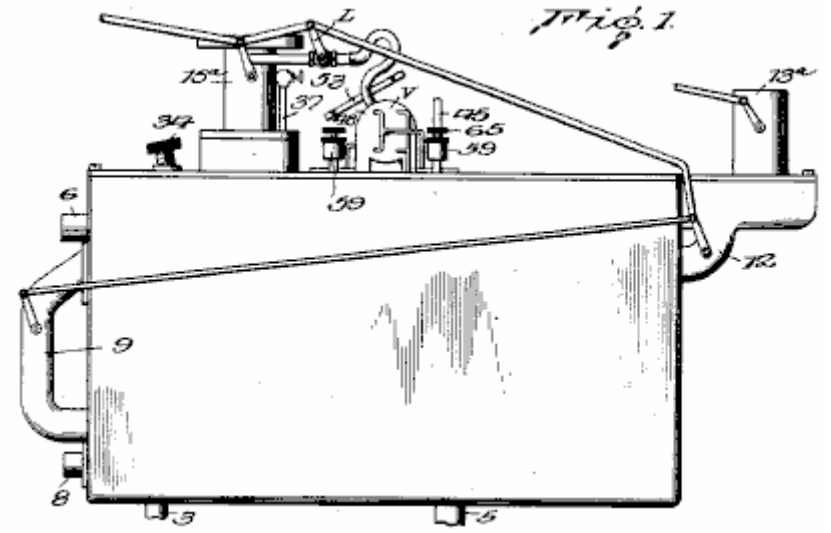

Fig.2 is a vertical cross-sectional view through the centre of Fig.1

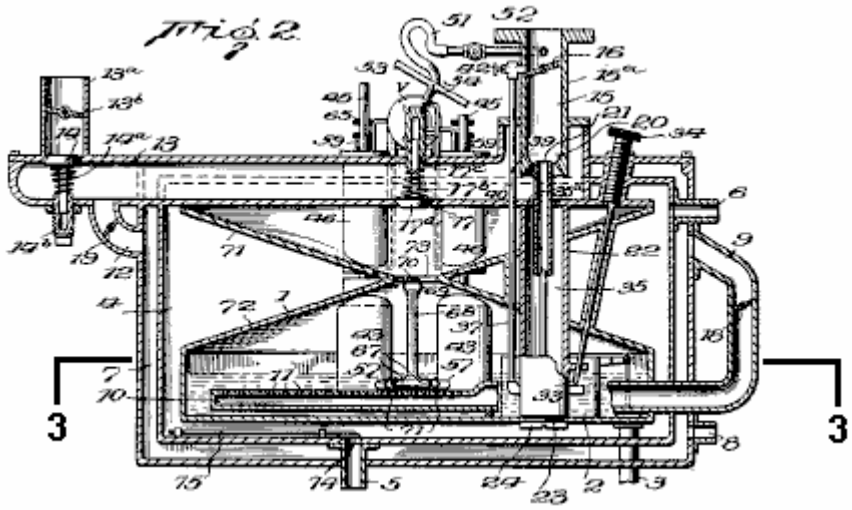

Fig.3 is a horizontal sectional view on line 3--3 of Fig.2.

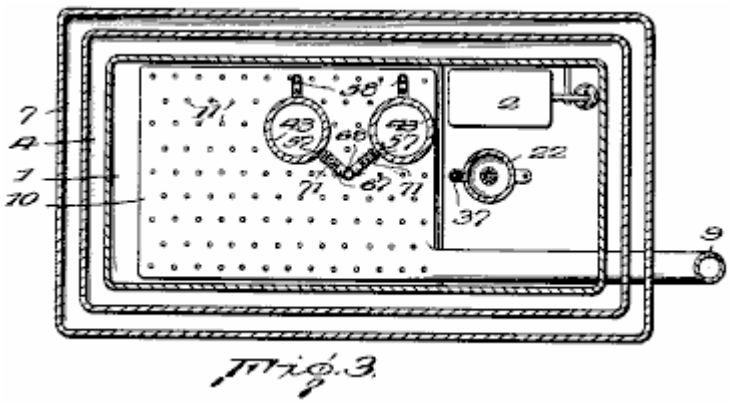

Fig.4 is an enlarged vertical sectional view through one of the pump cylinders and adjacent parts of the carburettor.

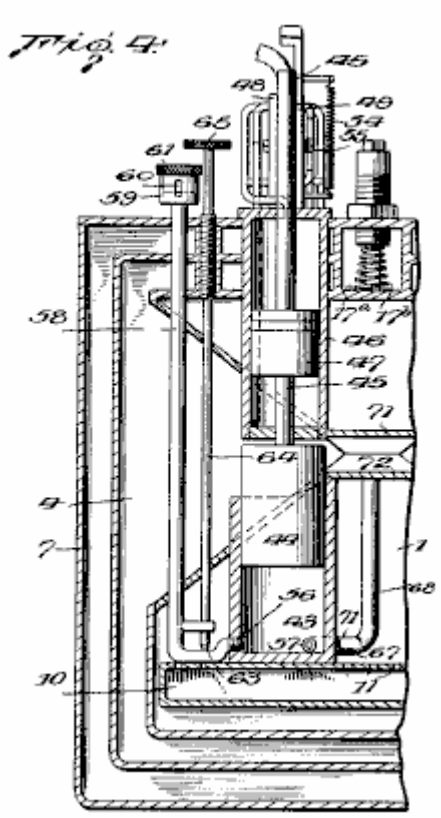

Fig.5 is an enlarged view through the complete double-acting pump and showing the associated distributing valve.

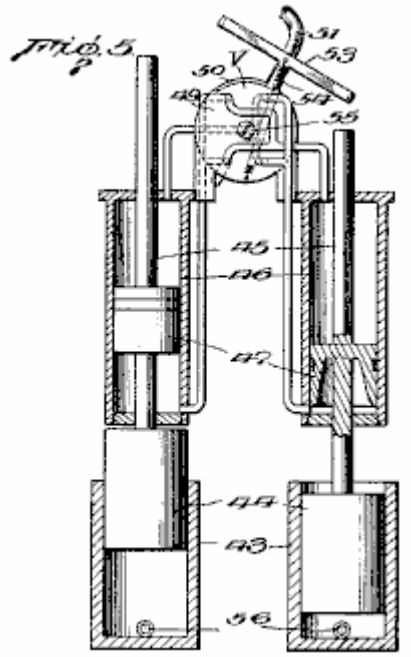

Fig.6 is an enlarged vertical sectional view through the atomising nozzle for supplying a starting charge for the engine.

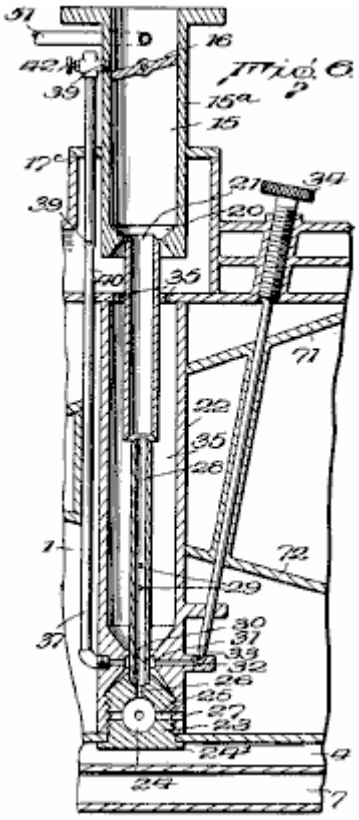

Fig.7 and Fig.8 are detail sectional views of parts 16 and 22 of Fig.6

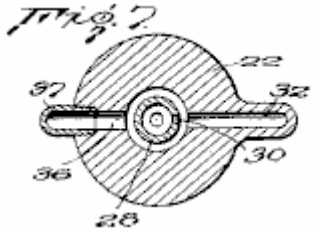

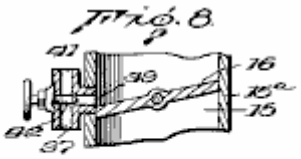

Fig.9 and Fig.10 are detail sectional views showing the inlet and outlet to the cylinders of the atomising pump.

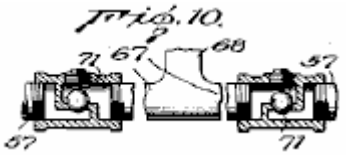

Referring to the drawings, the numeral **1** indicates a combined vaporising chamber and fuel bowl in which liquid fuel is maintained at the level indicated in **Fig.1** by a float-valve **2** controlling the flow of liquid fuel through pipe **3** which leads from the vacuum tank or other liquid fuel reservoir.

The vaporising chamber **1** is surrounded by a chamber **4** through which hot exhaust gasses from the engine, enter through pipe **5** located at the bottom of the chamber. These gasses pass around the vaporising chamber **1** and heat the chamber, which accelerates the vaporisation of the liquid fuel. The gasses then pass out through the upper outlet pipe **6**.

Chamber **4** for the hot exhaust gasses, is in turn surrounded by chamber **7** into which air for vaporising part of the liquid fuel in chamber **1** enters through a lower intake pipe **8**. This air passes upwards through chamber **4** through which the hot exhaust gasses pass, and so the air becomes heated. A portion of the heated air then passes though pipe **9** into an aerator **10**, located in the bottom of the vaporising chamber **1** and submerged in the liquid fuel in it. The aerator **10** is comprised of a relatively flat chamber which extends over a substantial portion of the bottom of the chamber and has a large number of small orifices **11** in its upper wall. The heated air entering the aerator passes through the orifices **11** as small bubbles which then pass upwards through the liquid fuel. These bubbles, together with the heat imparted to the vaporising chamber by the hot exhaust gasses, cause a vaporisation of a portion of the liquid fuel.

Another portion of the air from chamber **7** passes through a connection **12** into passage **13**, through which air is drawn directly from the atmosphere into the intake manifold. Passage **13** is provided with a valve **14** which is normally held closed by spring **14a**, the tension of which may be adjusted by means of the threaded plug **14b**. Passage **13** has an upward extension **13a**, in which is located a choke valve **13b** for assisting in starting the engine. Passage **13** passes through the vaporising chamber **1** and has its inner end communicating with passage **15** via connector **15a** which is secured to the intake manifold of the engine. Passage **15** is provided with the usual butterfly valve **16** which controls the amount of fuel admitted to the engine cylinders, and consequently, regulates the speed of the engine.

The portion of passage **13** which passes through the vaporising chamber has an opening **17** normally closed by valve **17a** which is held against its seat by spring **17b**, the tension of which may be adjusted by a threaded plug **17c**. As air is drawn past valve **14** and through passage **13** on the intake or suction stroke of the engine, valve **17a** will be lifted from its seat and a portion of the dry fuel vapour from the upper portion of the vaporising chamber will be sucked into passage **13** through opening **17** and mingle with the air in it before entering passage **15**.

In order to regulate the amount of air passing from chamber **7** to aerator **10** and into passage **13**, pipe **9** and connection **12** are provided with suitable valves **18** and **19** respectively. Valve **18** in pipe **9** is synchronised with butterfly valve **16** in passage **15**. Valve **19** is adjustable and preferably synchronised with butterfly valve **16** as shown, but this is not essential.

The bottom of passage **15** is made in the form of a venturi **20** and a nozzle **21** for atomised liquid fuel and air is located at or adjacent to the point of greatest restriction. Nozzle **21** is preferably supplied with fuel from the supply of liquid fuel in the bottom of the vaporising chamber, and to that end, a member 22 is secured within the vaporising chamber by a removable threaded plug **23** having a flanged lower end **24**. Plug **22** extends through an opening in the bottom of chamber **1**, and is threaded into the bottom of member **22**. This causes the bottom wall of chamber **1** to be securely clamped between the lower end of member **22** and flange **24**, thus securely retaining member **22** in place.

Plug **23** is provided with a sediment bowl **24** and extending from bowl **24** are several small passages **25** extending laterally, and a central vertical passage **26**. The lateral passages **25** register with corresponding passages **27** located in the lower end of member **22** at a level lower than that at which fuel stands in chamber **1**, whereby liquid fuel is free to pass into bowl **24**.

Vertical passage **26** communicates with a vertical nozzle **28** which terminates within the flaring lower end of nozzle **21**. The external diameter of nozzle **26** is less than the interior diameter of the nozzle **21** so that a space is provided between them for the passage of air or and vapour mixtures. Nozzle **26** is also provided with a series of

inlets **29**, for air or air and vapour mixtures, and a fuel inlet **30**. Fuel inlet **30** communicates with a chamber **31** located in the member **22** and surrounding the nozzle **28.** Chamber **30** is supplied with liquid fuel by means of a passage **32** which is controlled by a needle valve **33**, the stem of which, extends to the outside of the carburettor and is provided with a knurled nut **34** for adjusting purposes.

The upper end of member **22** is made hollow to provide a space **35** surrounding the nozzles **21** and **28**. The lower wall of the passage **13** is provided with a series of openings **35a**, to allow vapours to enter space **35** through them. The vapours may then pass through inlets **29** into the nozzle **28**, and around the upper end of the nozzle **28** into the lower end of nozzle **21**.

Extending from chamber **31** at the side opposite passage **32**, is a passage **36** which communicates with a conduit **37** which extends upwards through passage **13**, and connects through a lateral extension **39**, with passage **15** just above the butterfly valve **16**. The portion of conduit **37** which extends through passage **13** is provided with an orifice **39** through which air or air and fuel vapour may be drawn into the conduit **37** mingle with and atomise the liquid fuel being drawn through the conduit. To further assist in this atomisation of the liquid fuel passing through conduit **37**, the conduit is restricted at **40** just below orifice **39**.

The upper end of conduit **37** is in communication with the atmosphere through opening **41** through which air may be drawn directly into the upper portion of the conduit. The proportion of air to combustible vapours coming through conduit **37** is controlled by needle valve **42**.

As nozzle **21** enters directly into the lower end of passage **15**, suction in the inlet manifold will, in turn, create a suction on nozzle **21** which will cause a mixture of atomised fuel and air to be drawn directly into the intake manifold. This is found to be desirable when starting the engine, particularly in cold weather, when there might not be an adequate supply of vapour in the vaporising chamber , or the mixture of air and vapour passing through passage **13** might be to “lean” to cause a prompt starting of the engine. At such times, closing the choke valve **13b** will cause the maximum suction to be exerted on nozzle **21** and the maximum amount of air and atomised fuel to be drawn directly into the intake manifold. After the engine has been started, only a small portion of the combustible air and vapour mixture necessary for proper operation of the engine is drawn through nozzle **21** as the choke valve will then be open to a greater extent and substantially all of the air and vapour mixture necessary for operation of the engine will be drawn through the lower end **20** of passage **15**, around nozzle **21**.

Conduit **37** extending from fuel chamber **31** to a point above butterfly valve **16** provides an adequate supply of fuel when the engine is idling with vale **16** closed or nearly closed.

The casings forming chambers **1**, **4** and **7**, will be provided with the necessary openings, to subsequently be closed, so that the various parts may be assembled, and subsequently adjusted or repaired.

The intake stroke of the engine creates a suction in the intake manifold, which in turn causes air to be drawn past spring valve **14** into passage **13** and simultaneously a portion of the dry fuel vapour from the top of vaporising chamber **1** is drawn through opening **17** past valve **17a** to mix with the air moving through the passage. This mixture then passes through passage **15** to the intake manifold and engine cylinders.

The drawing of the dry fuel vapour into passage **13** creates a partial vacuum in chamber **1** which causes air to be drawn into chamber **7** around heated chamber **4** from where it passes through connection **12** and valve **19**, into passage **13** and through pipe **9** and valve **18** into aerator **10**, from which it bubbles up through the liquid fuel in the bottom of chamber **1** to vaporise more liquid fuel.

To assist in maintaining a supply of dry fuel vapour in the upper portion of vaporising chamber **1**, the carburettor is provided with means for atomising a portion of the liquid fuel in vaporising chamber **1**. This atomising means preferably is comprised of a double-acting pump which is operated by the suction existing in the intake manifold of the engine.

The double-acting pump is comprised of a pair of cylinders **43** which have their lower ends located in the vaporising chamber **1**, and each of which has a reciprocating pump piston **44** mounted in it. Pistons **44** have rods **45** extending from their upper ends, passing through cylinders **46** and have pistons **47** mounted on them within the cylinders **46**.

Cylinders **46** are connected at each end to a distributing valve **V** which connects the cylinders alternately to the intake manifold so that the suction in the manifold will cause the two pistons **44** to operate as a double-acting suction pump.

The distributing valve **V** is comprised of a pair of discs **48** and **49** between which is located a hollow oscillatable chamber **50** which is constantly subjected to the suction existing in the intake manifold through connection **51**

having a valve **52** in it. Chamber **50** has a pair of upper openings and a pair of lower openings. These openings are so arranged with respect to the conduits leading to the opposite ends of cylinders **46** that the suction of the engine simultaneously forces one piston **47** upwards while forcing the other one downwards.

The oscillatable chamber **50** has a T-shaped extension **53**. The arms of this extension are engaged alternately by the upper ends of the piston rods 45, so as to cause valve **V** to connect cylinders **46** in sequence to the intake manifold.

Spring **54** causes a quick opening and closing of the ports leading to the cylinders **46** so that at no time will the suction of the engine be exerted on both of the pistons **47**. The tension between discs **48** and **49** and the oscillatable chamber **50** may be regulated by screw **55**.

The particular form of the distributing valve **V** is not claimed here so a further description of operation is not necessary. As far as the present invention is concerned, any form of means for imparting movement to pistons **47** may be substituted for the valve **V** and its associated parts.

The cylinders **43** are each provided with inlets and outlets **56** and **57**, each located below the fuel level in chamber **1**. The inlets **56** are connected to horizontally and upwardly extending conduits **58** which pass through the carburettor to the outside. The upper ends of these conduits are enlarged at **59** and are provided with a vertically extending slot **60**. The enlarged ends **59** are threaded on the inside to accept plugs **61**. The position of these plugs with respect to slots **60** determines the amount of air which may pass through the slots **60** and into cylinder **43** on the suction stroke of the pistons **44**.

The upper walls of the horizontal portions of conduits **58** have an opening **62** for the passage of liquid fuel from chamber **1**. The extent to which liquid fuel may pass through these openings is controlled by needle valves **63**, whose stems **64** pass up through and out of the carburettor and terminate in knurled adjusting nuts **65**.

The horizontal portion of each conduit **58** is also provided with a check valve **66** (shown in **Fig.10**) which allows air to be drawn into the cylinders through conduits **58** but prevents liquid fuel from being forced upwards through the conduits on the down stroke of pistons **44**.

Outlets **57** connect with horizontal pipes **67** which merge into a single open-ended pipe **68** which extends upwards. The upper open end of this pipe terminates about half way up the height of the vaporising chamber **1** and is provided with a bail **69** which carries a deflecting plate **70** positioned directly over the open end of pipe **68**.

The horizontal pipes **67** are provided with check valves **71** which permit the mingled air and fuel to be forced from cylinders **43** by the pistons **44**, but which prevent fuel vapour from being drawn from chamber **1** into cylinders **43**.

When operating, pistons **44** on the 'up' strokes, draw a charge of air and liquid fuel into cylinders **43**, and on the 'down' stroke, discharge the charge in an atomised condition through pipes **67** and **68**, against deflecting plate **70** which further atomises the particles of liquid fuel so that they will readily vaporise. Any portions of the liquid fuel which do not vaporise, drop down into the supply of liquid fuel in the bottom of the vaporising chamber where they are subjected to the vaporising influence of the bubbles of heated air coming from the aerator **10**, and may again pass into the cylinders **43**.

As previously stated, the vaporised fuel for introduction into the intake manifold of the engine, is taken from the upper portion of the vaporising chamber **1**. To ensure that the vapour in this portion of the chamber shall contain no, or substantially no, entrained droplets of liquid fuel, chamber **1** is divided into upper and lower portions by the walls **71** and **72** which converge from all directions to form a central opening **73**. With the vaporising chamber thus divided into upper and lower portions which are connected only by the relatively small opening **73**, any droplets entrained by the bubbles rising from the aerator **10**, will come into contact with the sloping wall **72** and be deflected back into the main body of liquid fuel in the bottom of the chamber. Likewise, the droplets of atomised fuel being forced from the upper end of pipe **68** will, on striking plate **70**, be deflected back into the body of liquid fuel and not pass into the upper portion of the chamber.

In order that the speed of operation of the atomising pump may be governed by the speed at which the engine is running, and further, that the amount of air admitted from chamber **7** to the aerator **10**, and to passage **13** through connection **12**, may be increased as the speed of the engine increases, the valves **18**, **19** and **52** and butterfly valve **16** are all connected by a suitable linkage **L** so that as butterfly valve **16** is opened to increase the speed of the engine, valves **18**, **19** and **52** will also be opened.

As shown in **Fig.2**, the passage of the exhaust gasses from the engine to the heating chamber **4**, located between the vaporising chamber and the air chamber **7**, is controlled by valve **74**. The opening and closing of valve **74** is controlled by a thermostat in accordance with the temperature inside chamber **4**, by means of an adjustable metal

rod 75 having a high coefficient of expansion, whereby the optimum temperature may be maintained in the vaporising chamber, irrespective of the surrounding temperature.

From the foregoing description, it will be understood that the present invention provides a carburettor for supplying to internal combustion engines, a comingled mixture of air and liquid fuel vapour free from microscopic droplets of liquid fuel which would burn rather than explode in the cylinders and that a supply of such dry vaporised fuel is constantly maintained in the carburettor.

The Second High MPG Carburettor of Charles Pogue

US Patent 1,997,497 9th April 1935 Inventor: Charles N. Pogue

CARBURETTOR

This patent describes a carburettor design which was able to produce very high mpg figures using the gasoline available in the USA in the 1930s but which is no longer available as the oil industry does not want functional high mpg carburettors to be available to the public.

DESCRIPTION

This invention relates to a device for obtaining an intimate contact between a liquid in a truly vaporous state and a gas, and particularly to such a device which may serve as a carburettor for internal combustion engines and is an improvement on the form of device shown in my Patent No. 1,938,497, granted on 5th December 1933.

In carburettors commonly used for supplying a combustible mixture of air and liquid fuel to internal combustion engines, a relatively large amount of the atomised liquid fuel is not vaporised and enters the engine cylinder more or less in the form of microscopic droplets. When such a charge is ignited in the engine cylinder, only that portion of the liquid fuel which has been converted into the vaporous, and consequently molecular state, combines with the air to give an explosive mixture. The remaining portion of the liquid fuel which is drawn into the engine cylinders remains in the form of small droplets and does not explode imparting power to the engine, but instead burns with a flame and raises the engine temperature above that at which the engine operates most efficiently, i.e. from 160° F. to 180° F.

In my earlier patent, there is shown and described a form of carburettor in which the liquid fuel is substantially completely vaporised prior to its introduction into the engine cylinders, and in which, means are provided for maintaining a reverse supply of “dry” vapour available for introduction into the engine cylinder. Such a carburettor has been found superior to the standard type of carburettor referred to above, and to give a better engine performance with far less consumption of fuel.

It is an object of the present invention to provide a carburettor in which the liquid fuel is broken up and prepared in advance of and independent of the suction of the engine and in which a reserve supply of dry vapour will be maintained under pressure, ready for introduction into the engine cylinder at all times. It is also an object of the invention to provide a carburettor in which the dry vapour is heated to a sufficient extent prior to being mixed with the main supply of air which carries it into the engine cylinder, to cause it to expand so that it will be relatively lighter and will become more intimately mixed with the air, prior to explosion in the engine cylinders.

I have found that when the reserve supply of dry vapour is heated and expanded prior to being mixed with the air, a greater proportion of the potential energy of the fuel is obtained and the mixture of air and fuel vapour will explode in the engine cylinders without any apparent burning of the fuel which would result in unduly raising the operating temperature of the engine.

More particularly, the present invention comprises a carburettor in which liquid fuel vapour is passed from a main vaporising chamber under at least a slight pressure, into and through a heated chamber where it is caused to expand and in which droplets of liquid fuel are either vaporised or separated from the vapour , so that the fuel finally introduced into the engine cylinders is in the true vapour phase. The chamber in which the liquid fuel vapour is heated and caused to expand, is preferably comprised of a series of passages through which the vapour and exhaust gases from the engine pass in tortuous paths in such a manner that the exhaust gasses are brought into heat interchange relation with the vapour and give up a part of their heat to the vapour, thus causing heating and expansion of the vapour.

The invention will be further described in connection with the accompanying drawings, but this further disclosure and description is to be taken merely as an exemplification of the invention and the invention is not limited to the embodiment so described.

DESCRIPTION OF THE DRAWINGS

Fig.1 is a vertical cross-sectional view through a carburettor embodying my invention.

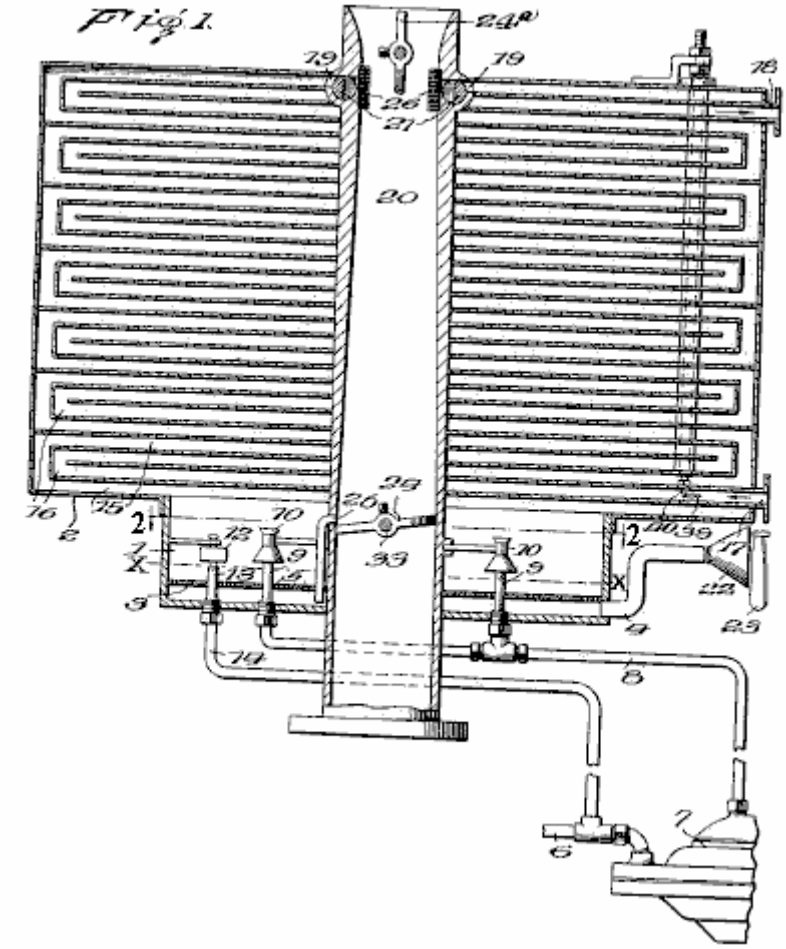

Fig.2 is a horizontal sectional view through the main vaporising or atomising chamber, taken on line 2--2 of Fig.1

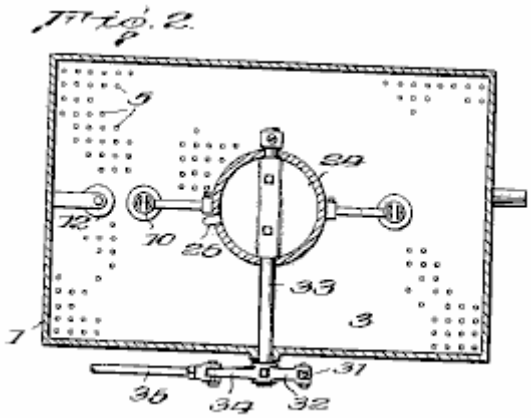

Fig.3 is a side elevation of the carburettor.

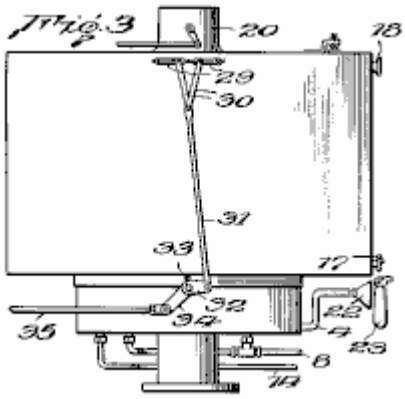

Fig.4 is a detail sectional view of one of the atomising nozzles and its associated parts

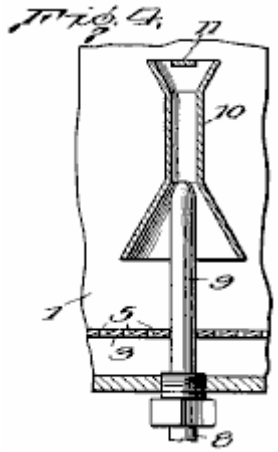

Fig.5 is a detail cross-sectional view showing the means for controlling the passage of gasses from the vapour expanding chamber into the intake manifold of the engine.

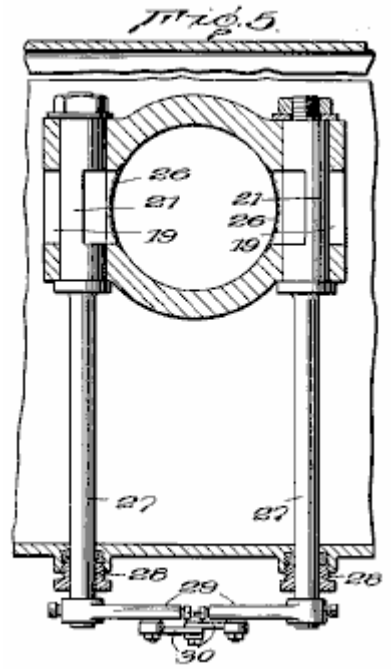

Fig.6 is a perspective view of one of the valves shown in Fig.5

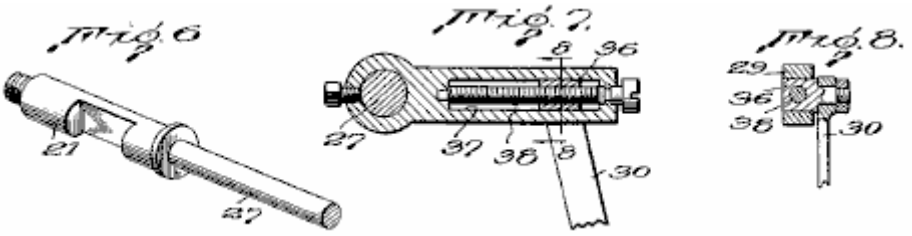

Fig.7 is a cross-sectional view showing means for adjusting the valves shown in Fig.5

Fig.8 is a cross-sectional view on line 8--8 of Fig.7

Referring now to the drawings, the numeral **1** indicates a main vaporising and atomising chamber for the liquid fuel located at the bottom of, and communicating with, a vapour heating and expanding chamber **2**.

The vaporising chamber is provided with a perforated false bottom **3** and is normally filled with liquid fuel to the level **x**. Air enters the space below the false bottom **3** via conduit **4** and passes upwards through perforations **5** in the false bottom and then bubbles up through the liquid fuel, vaporising a portion of it.

To maintain the fuel level **x** in chamber **1**, liquid fuel passes from the usual fuel tank (not shown) through pipe **8** into and through a pair of nozzles **9** which have their outlets located in chamber **1**, just above the level of the liquid fuel in it. The pump **7** may be of any approved form but is preferably of the diaphragm type, as such fuel pumps are now standard equipment on most cars.

The nozzles **9** are externally threaded at their lower ends to facilitate their assembly in chamber **1** and to permit them to be removed readily, should cleaning be necessary.

The upper ends of nozzles **9** are surrounded by venturi tubes **10**, having a baffle **11**, located at their upper ends opposite the outlets of the nozzles. The liquid fuel being forced from the ends of nozzles **9** into the restricted portions of the Venturi tubes, causes a rapid circulation of the air and vapour in the chamber through the tubes **10** and brings the air and vapour into intimate contact with the liquid fuel, with the result that a portion of the liquid fuel is vaporised. The part of the liquid fuel which is not vaporised, strikes the baffles **11** and is further broken up and deflected downwards into the upward-flowing current of air and vapour.

Pump **7** is regulated to supply a greater amount of liquid fuel to the nozzles **9** than will be vaporised. The excess drops into chamber **1** and causes the liquid to be maintained at the indicated level. When the liquid fuel rises above that level, a float valve **12** is lifted, allowing the excess fuel to flow out through overflow pipe **13** into pipe **14** which leads back to pipe **6** on the intake side of pump **7**. Such an arrangement allows a large amount of liquid fuel to be circulated by pump **7** without more fuel being withdrawn from the fuel tank than is actually vaporised and consumed in the engine. As the float valve **12** will set upon the end of the outlet pipe **13** as soon as the liquid level drops below the indicated level, there is no danger of vapour passing into pipe **14** and from there into pump **7** and interfere with its normal operation.

The upper end of the vaporising and atomising chamber **1** is open and vapour formed by air bubbling through the liquid fuel in the bottom of the chamber and that formed as the result of atomisation at nozzles **9**, pass into the heating and expanding chamber **2**. As is clearly shown in **Fig.1**, chamber **2** comprises a series of tortuous passages **15** and **16** leading from the bottom to the top. The fuel vapour passes through passages **15** and the exhaust gasses of the engine pass through passages **16**, a suitable entrance **17** and exit **18** being provided for that purpose.

The vapour passing upwards in a zigzag path through passages **15**, will be brought into heat interchange relation with the hot walls of the passages **16** traversed by the hot exhaust gasses. The total length of the passages **15** and **16** is such that a relatively large reserve supply of the liquid fuel is always maintained in chamber **2**, and by maintaining the vapour in heat interchange relation with the hot exhaust gasses for a substantial period, the vapour will absorb sufficient heat to cause it to expand, with the result that when it is withdrawn from the top of chamber 2, it will be in the true vapour phase, and due to expansion, relatively light.

Any minute droplets of liquid fuel entrained by the vapour in chamber **1** will precipitate out in the lower passages **15** and flow back into chamber **1**, or else be vaporised by the heat absorbed from the exhaust gasses during its passage through chamber **2**.

The upper end of vapour passage **15** communicates with openings **19** adjacent to the upper end of a down-draft air tube **20** leading to the intake manifold of the engine. Valves **21** are interposed in openings **19**, so that the passage of the vapour through them into the air tube may be controlled. Valves **21** are preferably of the rotary plug type and are controlled as described below.

Suitable means are provided for causing the vapour to be maintained in chamber **2,** under a pressure greater than atmospheric, so that when the valves **21** are opened, the vapour will be forced into air tube **20** independent of the engine suction. Such means may comprise an air pump (not shown) for forcing air through pipe **4** into chamber **1** beneath the false bottom **3**, but I prefer merely to provide pipe 4 with a funnel-shaped inlet end **22** and placement just behind the usual engine fan **23**. This causes air to pass through pipe **4** with sufficient force to maintain the desired pressure in chamber **2**, and the air being drawn through the radiator by the fan will be preheated prior to its introduction into chamber **1** and hence will vaporise greater amounts of the liquid fuel. If desired, pipe **4** may be surrounded by an electric or other heater, or exhaust gasses from the engine may be passed around it to further preheat the air passing through it prior to its introduction into the liquid fuel in the bottom of chamber **1**.

Air tube **20** is provided with a butterfly throttle valve **24** and a choke valve **24a**, as is customary with carburettors used for internal combustion engines. The upper end of air tube **20** extends above chamber **2** a distance sufficient to receive an air filter and/or silencer, if desired.

A low-speed or idling jet **25** has its upper end communicating with the passage through air tube **20** adjacent to the throttling valve **24** and its lower end extending into the liquid fuel in the bottom of chamber **1,** for supplying fuel to the engine when the valves are in a position such as to close the passages **19**. However, the passage through idling jet **25** is so small that under normal operations, the suction on it is not sufficient to lift fuel from the bottom of chamber **1**.

To prevent the engine from backfiring into vapour chamber **2**, the ends of the passages **19** are covered with a fine mesh screen **26** which, operating on the principle of the miner's lamp, will prevent the vapour in chamber **2** from exploding in case of a backfire, but which will not interfere substantially with the passage of the vapour from chamber **2** into air tube **20** when valves **21** are open. Air tube **20** is preferably in the form of a venturi with the greatest restriction being at that point where the openings **19** are located, so that when valves **21** are opened, there will be a pulling force on the vapour caused by the increased velocity of the air at the restricted portion of air tube **20** opposite the openings **19**, as well as an expelling force on them due to the pressure in chamber **2**.

As shown in **Fig.3**, the operating mechanism of valves **21** is connected to the operating mechanism for throttle valve **24**, so that they are opened and closed simultaneously with the opening and closing of the throttle valve, ensuring that the amount of vapour supplied to the engine will, at all times, be in proportion to the demands placed upon the engine. To that end, each valve **21** has an extension, or operating stem **27**, protruding through one of the side walls of the vapour-heating and expanding chamber **2**. Packing glands **28** of ordinary construction, surround stems **27** where they pass through the chamber wall, to prevent leakage of vapour at those points.

Operating arms **29** are rigidly secured to the outer ends of stems **27** and extend towards each other. The arms are pivotally and adjustably connected to a pair of links **30** which, at their lower ends are pivotally connected to an operating link **31**, which in turn, is pivotally connected to arm **32** which is rigidly secured on an outer extension **33** of the stem of the throttle valve **24**. Extension **33** also has rigidly connected to it, arm **34** to which is connected operating link **35** leading from the means for accelerating the engine.

The means for adjusting the connection from the upper ends of links **30** to valve stems **27** of valves **21**, so that the amount of vapour delivered from chamber 2 may be regulated to cause the most efficient operation of the particular engine to which the carburettor is attached, comprises angular slides **36**, to which the upper ends of links **30** are fastened, and which cannot rotate but can slide in guideways **37** located in arms **29**. Slides **36** have threaded holes through which screws **38** pass. Screws **38** are rotatably mounted in arms **29**, but are held against longitudinal movement so that when they are rotated, slides **36** will be caused to move along the guideways **37** and change the relative position of links **30** to the valve stems **27**, so that a greater or less movement, and consequently, a greater or less opening of the ports **19** will take place when throttle valve **24** is operated.

For safety, and for most efficient operation of the engine, the vapour in chamber **2** should not be heated or expanded beyond a predetermined amount, and in order to control the extent to which the vapour is heated, and consequently, the extent to which it expands, a valve **39** is located in the exhaust passage **16** adjacent to inlet **17**. Valve **39** is preferably theromstatically controlled, as for example, by an expanding rod thermostat **40**, which extends through chamber **2**. However, any other means may be provided for reducing the amount of hot exhaust gasses entering passage **16** when the temperature of the vapour in the chamber reaches or exceeds the optimum.

The carburettor has been described in detail in connection with a down-draft type of carburettor, but it is to be understood that its usefulness is not to be restricted to that particular type of carburettor, and that the manner in which the mixture of air and vapour is introduced into the engine cylinders is immaterial as far as the advantages of the carburettor are concerned.

The term "dry vapour" is used to define the physical condition of the liquid fuel vapour after removal of liquid droplets or the mist which is frequently entrained in what is ordinarily termed a vapour.

From the foregoing description it will be seen that the present invention provides a carburettor in which the breaking up of the liquid fuel for subsequent use is independent of the suction created by the engine, and that after the liquid fuel is broken up, it is maintained under pressure in a heated space for a length of time sufficient to permit all entrained liquid particles to be separated or vaporised and to permit the dry vapour to expand prior to its introduction into and admixture with the main volume of air passing into the engine cylinders.

The Third High MPG Carburettor of Charles Pogue

US Patent 2,026,798 7th January 1936 Inventor: Charles N. Pogue

CARBURETTOR

This patent describes a carburettor design which was able to produce very high mpg figures using the gasoline available in the USA in the 1930s but which is no longer available as the oil industry does not want functional high mpg carburettors to be available to the public.

DESCRIPTION

This invention relates to carburettors suitable for use with internal combustion engines and is an improvement on the carburettors shown in my Patents Nos. 1,938,497, granted on 5th December 1933 and 1,997,497 granted on 9th April 1935.

In my earlier patents, an intimate contact between such as the fuel used for internal combustion engines, and a gas such as air, is obtained by causing the gas to bubble up through a body of the liquid. The vaporised liquid passes into a vapour chamber which preferably is heated, and any liquid droplets are returned to the body of the liquid, with the result that the fuel introduced into the combustion chambers is free of liquid particles , and in the molecular state so that an intimate mixture with the air is obtained to give an explosive mixture from which nearer the maximum energy contained in the liquid fuel is obtained. Moreover, as there are no liquid particles introduced into the combustion chambers, there will be no burning of the fuel and consequently, the temperature of the engine will not be increased above that at which it operates most efficiently.

In my Patent No. 1,997,497, the air which is to bubble up through the body of the liquid fuel is forced into and through the fuel under pressure and the fuel vapour and air pass into a chamber where they are heated and caused to expand. The introduction of the air under pressure and the expansion of the vaporous mixture ensures a sufficient pressure being maintained in the vapour heating and expanding chamber, to cause at least a portion of it to be expelled from it into the intake manifold as soon as the valve controlling the passage to it is opened.

In accordance with the present invention, improved means are provided for maintaining the vaporous mixture in the vapour-heating chamber under a predetermined pressure, and for regulating such pressure so that it will be at the optimum for the particular conditions under which the engine is to operate. Such means preferably comprises a reciprocating pump operated by a vacuum-actuated motor for forcing the vapour into and through the chamber. The pump is provided with a suitable pressure-regulating valve so that when the pressure in the vapour-heating chamber exceeds the predetermined amount, a portion of the vapour mixture will be by-passed from the outlet side to the inlet side of the pump, and so be recirculated.

The invention will be described further in connection with the accompanying drawings, but such further disclosure and description is to be taken merely as an exemplification of the invention, and the invention is not limited to that embodiment of the invention.

DESCRIPTION OF THE DRAWINGS

Fig.1 is a side elevation of a carburettor embodying the invention.

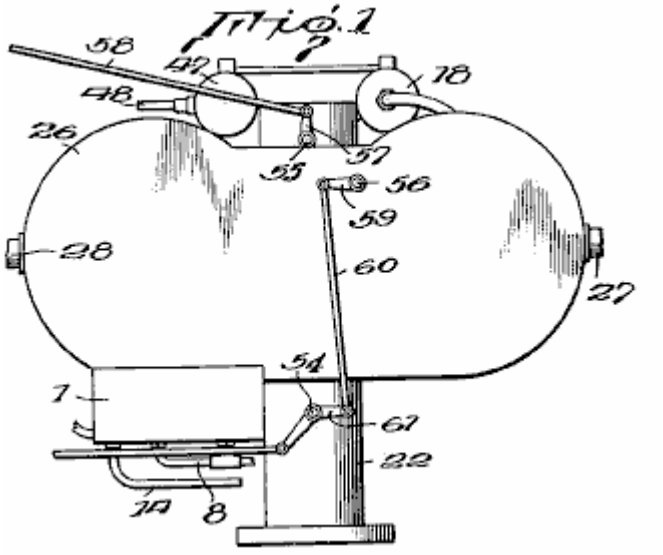

Fig.2 is a plan view of the carburettor

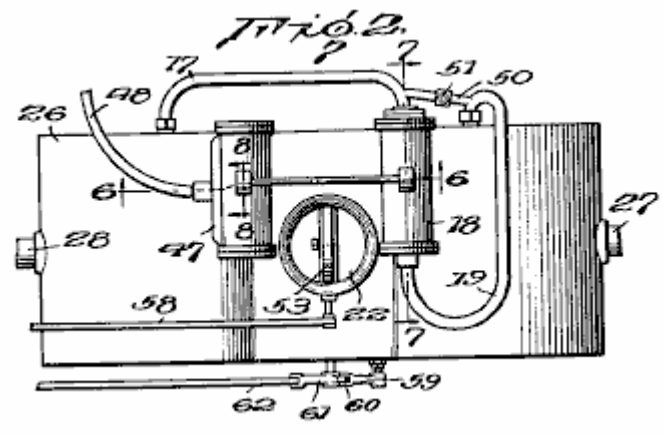

Fig.3 is an enlarged vertical section view.

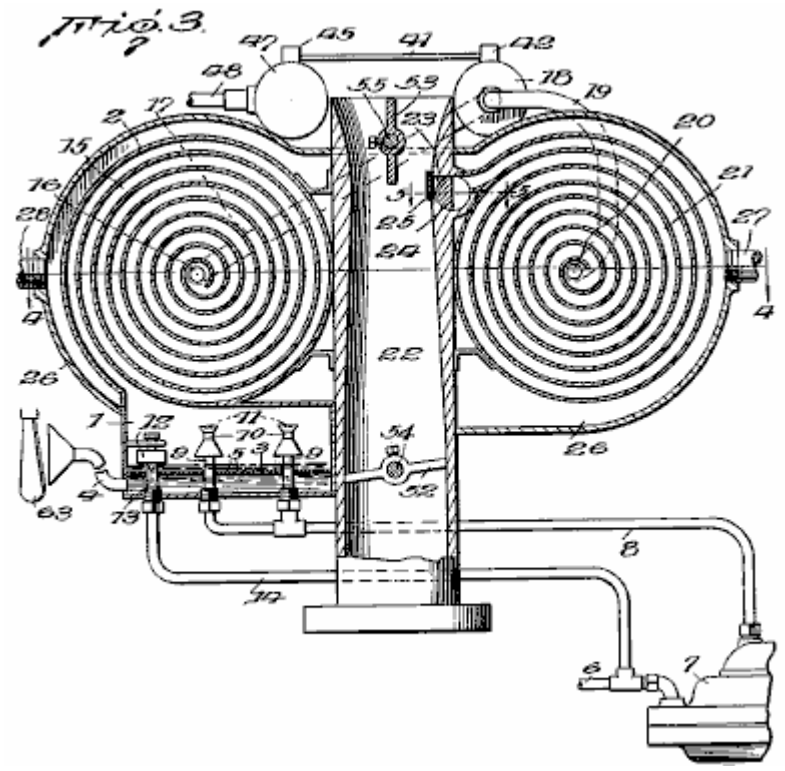

Fig.4 is a transverse sectional view on line 4--4 of Fig.3

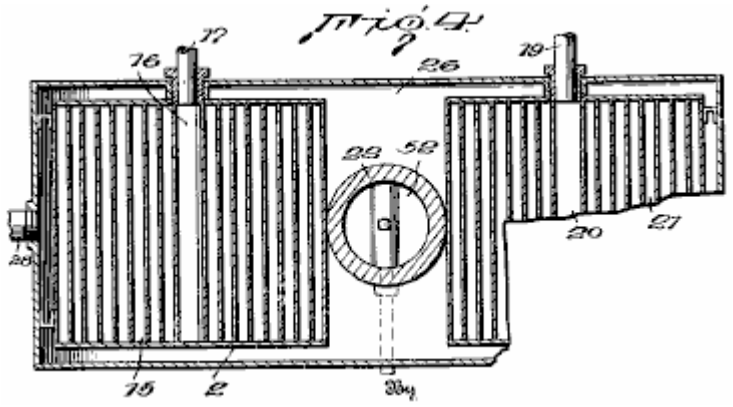

Fig.5 is a detail sectional view on line 5--5 of Fig.3

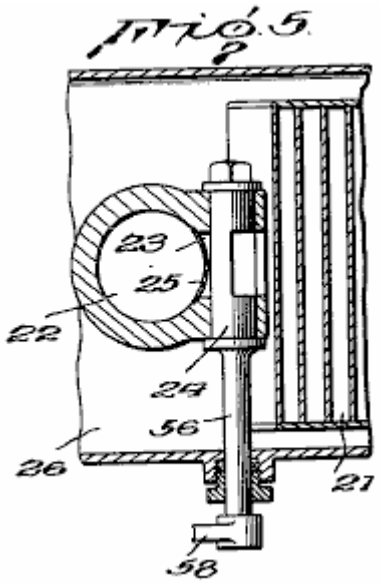

Fig.6 is a transverse sectional view through the pump and actuating motor, taken on line 6--6 of Fig.2

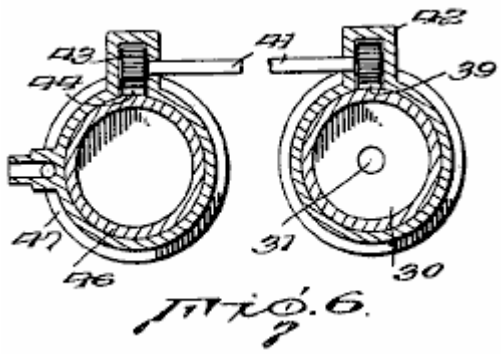

Fig.7 is a longitudinal sectional view through the pump taken on line 7--7 of Fig.2

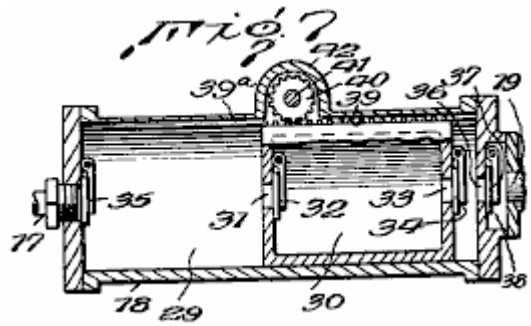

Fig.8 is a longitudinal sectional view through a part of the pump cylinder, showing the piston in elevation.

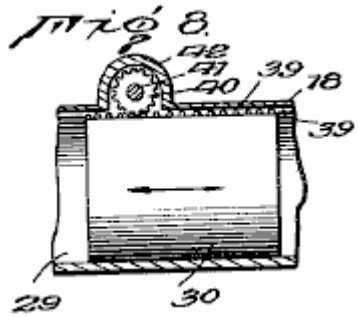

In the drawings, a vaporising and atomising chamber **1** is located at the bottom of the carburettor and has an outlet at its top for the passage of fuel vapour and air into a primary vapour-heating chamber **2**.

The vaporising chamber **1** is provided with a perforated false bottom **3** and is normally filled with liquid fuel to the level indicated in **Fig.1**. Air is introduced via conduit **4** into the space below the false bottom **3**, and then through the perforations **5** in the false bottom which breaks it into a myriad of fine bubbles, which pass upwards through the liquid fuel above the false bottom.

Liquid fuel for maintaining the level indicated in chamber **1** passes from the usual fuel tank (not shown) through pipe **6**, and is forced by pump **7** through pipe **8** through a pair of nozzles **9** having their outlets located in chamber **1**, just above the level of the liquid fuel in it. Pump **7** may be of any approved form but is preferably of the diaphragm type, as such fuel pumps are now standard equipment on most cars.

The nozzles **9** are externally threaded at their lower ends to facilitate their assembly in chamber **1** and to permit them to be readily removed should cleaning become necessary.

The upper ends of nozzles **9** are surrounded by venturi tubes **10** having baffles **11** located at their upper ends opposite the outlets of the nozzles, as is shown and described in detail in my Patent No. 1,997,497. The liquid fuel being forced from the ends of nozzles **9** into the restricted portions of the venturi tubes, causes a rapid circulation of the air and vapour in the chamber through tubes **10** and brings the air and vapour into intimate contact with the liquid fuel, with the result that a portion of the liquid fuel is vaporised. Unvaporised portions of the liquid fuel strike the baffles **11** and are thereby further broken up and deflected downwards into the upward-flowing current of air and vapour.

Pump **7** is regulated to supply a greater amount of liquid fuel to nozzles **9** than will be vaporised. The excess liquid fuel drops into chamber **1** which causes the liquid there to be maintained at the indicated level. When the liquid fuel rises above that level, float valve **12** opens and the excess fuel flows through overflow pipe **13** into pipe **14** which leads back to pipe **6** on the intake side of pump **7**. Such an arrangement permits a large amount of liquid fuel to be circulated by pump 7 without more fuel being withdrawn from the fuel tank than is actually vaporised and consumed by the engine. As float valve **12** will set upon the end of the outlet pipe **13** as soon as the liquid level drops below the indicated level, there is no danger of vapour passing into pipe **14** and thence into pump **7** to interfere with its normal operation.

The amount of liquid fuel vaporised by nozzles **9** and by the passage of air through the body of liquid, is sufficient to provide a suitably enriched vaporous mixture for introducing into the passage leading to the intake manifold of the engine, through which the main volume of air passes.

Vapour formed by air bubbling through the liquid fuel in the bottom of chamber **1** and that formed by the atomisation at the nozzles **9**, pass from the top of that chamber into the primary heating chamber **2**. As is clearly shown in **Fig.1**, chamber **2** comprises a relatively long spiral passage **15** through which the vaporous mixture gradually passes inwards to a central outlet **16** to which is connected a conduit **17** leading to a reciprocating pump **18** which forces the vaporous mixture under pressure into conduit **19** leading to a central inlet **20** of a secondary heating chamber **21**, which like the primary heating chamber, comprises a relatively long spiral. The vaporous mixture gradually passes outwards through the spiral chamber **21** and enters a downdraft air tube **22**, leading to the intake manifold of the engine, through an outlet **23** controlled by a rotary plug valve **24**.

To prevent the engine from backfiring into vapour chamber **2**, the ends of passage **19** are covered with a fine mesh screen **25**, which, operating on the principle of a miner's lamp, will prevent the vapour in chamber **2** from exploding in case of a backfire, but will not interfere substantially with the passage of the vapour from chamber **21** into air tube **22** when valve **24** is open.

The air tube **22** is preferably in the form of a venturi with the greatest constriction being at that point where outlet **23** is located, so that when valve **24** is opened, there will be a pulling force on the vaporous mixture due to the increased velocity of the air at the restricted portion of the air tube opposite outlet **23**, as well as an expelling force on it due to the pressure maintained in chamber **21** by pump **18**.

Both the primary and secondary spiral heating chambers **15** and **21**, and the central portion of air tube **22** are enclosed by a casing **26** having an inlet **27** and an outlet **28** for a suitable heating medium such as the gasses coming from the exhaust manifold.

Pump **18**, used to force the vaporous mixture from primary heating chamber **2** into and through the secondary chamber **21**, includes a working chamber **29** for hollow piston **30**, provided with an inlet **31** controlled by valve **32**, and an outlet **33** controlled by a valve **34**. The end of the working chamber **29** to which is connected conduit **17**, which conducts the vaporous mixture from primary heating chamber **2**, has an inlet valve **35**, and the opposite end of the working chamber has an outlet **36** controlled by valve **37** positioned in an auxiliary chamber **38**, to which is connected outlet pipe **19** which conducts the vaporous mixture under pressure to the secondary heating chamber **21**. Each of the valves **32**, **34**, **35** and **37** is of the one-way type. They are shown as being gravity-actuated flap valves, but it will be understood that spring-loaded or other types of one-way valves may be used if desired.

One side of piston **30** is formed with a gear rack **39** which is received in a groove **39a** of the wall forming the cylinder of the pump. The gear rack **39** engages with an actuating spur gear **40** carried on one end of shaft **41** and operating in a housing **42** formed on the pump cylinder. The other end of shaft **41** carries a spur gear **43**, which engages and is operated by a gear rack **44** carried on a piston **46** of a double-acting motor **47**. The particular construction of the double-acting motor **47** is not material, and it may be of a vacuum type commonly used for operating windscreen wipers on cars, in which case a flexible hose **48** would be connected with the intake manifold of the engine to provide the necessary vacuum for operating the piston **45**.

Under the influence of the double-acting motor **47**, the piston **30** of the pump has a reciprocatory movement in the working chamber **29**. Movement of the piston towards the left in **Fig.7** tends to compress the vaporous mixture in the working chamber between the end of the piston and the inlet from pipe **17**, and causes valve **35** to be forced tightly against the inlet opening. In a like manner, valves **32** and **34** are forced open and the vaporous mixture in that portion of the working chamber is forced through the inlet **31** in the end of the piston **30**, into the interior of the piston, where it displaces the vaporous mixture there and forces it into the space between the right-hand end of the piston and the right-hand end of the working chamber. The passage of the vaporous mixture into the right-hand end of the working chamber is supplemented by the partial vacuum created there when the piston moves to the left. During such movement of the piston, valve **37** is maintained closed and prevents any sucking back of the vaporous mixture from the secondary heating chamber **21**.

When motor **47** reverses, piston **30** moves to the right and the vaporous mixture in the right-hand end of the working chamber is forced past valve **37** through pipe **19** into the secondary heating chamber **21**. At the same time, a vacuum is created behind piston **30** which results in the left-hand end of the working chamber being filled again with the vaporous mixture from the primary heating chamber **2**.

As the operation of pump **47** varies in accordance with the suction created in the intake manifold, it should be regulated so that the vaporous mixture is pumped into the secondary heating chamber at a rate sufficient to maintain a greater pressure there than is needed. In order that the pressure in the working chamber may at all times be maintained at the optimum, a pipe **50** having an adjustable pressure-regulating valve **51** is connected between the inlet and outlet pipes **17** and **19**. Valve **51** will permit a portion of the vaporous mixture discharged

from the pump to be bypassed to inlet **17** so that a pressure predetermined by the seating of valve **51** will at all times be maintained in the second heating chamber **21**.

Air tube **22** is provided with a butterfly throttle valve **52** and a choke valve **53**, as is usual with carburettors adapted for use with internal combustion engines. Operating stems **54**, **55** and **56** for valves **52**, **53** and **24** respectively, extend through casing **26**. An operating arm **57** is rigidly secured to the outer end of stem **55** and is connected to a rod **58** which extends to the dashboard of the car, or some other place convenient to the driver. The outer end of stem **56** of valve **24** which controls outlet **23** from the secondary heating chamber **21** has one end of an operating arm **59** fixed securely to it. The other end is pivotally connected to link **60** which extends downwards and pivotally connects to one end of a bell crank lever **61**, rigidly attached to the end of stem **54** of throttle valve **52**. The other end of the bell crank lever is connected to an operating rod **62** which, like rod **58**, extends to a place convenient to the driver. Valves **24** and **52** are connected for simultaneous operation so that when the throttle valve **52** is opened to increase the speed of the engine, valve **24** will also be opened to admit a larger amount of the heated vaporous mixture from the secondary heating chamber **21**.

While the suction created by pump **18** ordinarily will create a sufficient vacuum in the primary heating chamber **2** to cause air to be drawn into and upwards through the body of liquid fuel in the bottom of vaporising chamber **1**, in some instances it may be desirable to provide supplemental means for forcing the air into and up through the liquid, and in such cases an auxiliary pump may be provided for that purpose, or the air conduit **4** may be provided with a funnel-shaped intake which is positioned behind the engine fan **63** which is customarily placed behind the engine radiator.

The foregoing description has been given in connection with a downdraft type of carburettor, but it is to be understood that the invention is not limited to use with such type of carburettors and that the manner in which the mixture of air and vapour is introduced into the engine cylinders is immaterial as far as the advantages of the carburettor are concerned.

Before the carburettor is put into use, the pressure-regulating valve **51** in the bypass pipe **50** will be adjusted so that the pressure best suited to the conditions under which the engine is to be operated, will be maintained in the secondary heating chamber **21**. When valve **51** has thus been set and the engine started, pump **18** will create a partial vacuum in the primary heating chamber **2** and cause air to be drawn through conduit **4** to bubble upwards through the liquid fuel in the bottom of the vaporising and atomising chamber **1** with the resulting vaporisation of a part of the liquid fuel. At the same time, pump **7** will be set into operation and liquid fuel will be pumped from the fuel tank through the nozzles **9** which results in an additional amount of the fuel being vaporised. The vapour resulting from such atomisation of the liquid fuel and the passage of air through the body of the liquid, will pass into and through spiral chamber **1** where they will be heated by the products of combustion in the surrounding chamber formed by casing **26**. The fuel vapour and air will gradually pass inwards through outlet **16** and through conduit **17** to pump **18** which will force them into the secondary heating chamber **21** in which they will be maintained at the predetermined pressure by the pressure-regulating valve **51**. The vaporous mixture is further heated in chamber **21** and passes spirally outward to the valve-controlled outlet **23** which opens into air tube **22** which conducts the main volume of air to the intake manifold of the engine.

The heating of the vaporous mixture in the heating chambers **2** and **21**, tends to cause them to expand, but expansion in chamber **21** is prevented due to the pressure regulating valve **51**. However, as soon as the heated vaporous mixture passes valve **24** and is introduced into the air flowing through intake tube **22**, it is free to expand and thereby become relatively light so that a more intimate mixture with the air is obtained prior to the mixture being exploded in the engine cylinders. Thus it will be seen that the present invention not only provides means wherein the vaporous mixture from heating chamber **21** is forced into the air passing through air tube **22** by a positive force, but it is also heated to such an extent that after it leaves chamber **21** it will expand to such an extent as to have a density less than it would if introduced directly from the vaporising and atomising chamber **1** into the air tube **22**.

The majority of the liquid particles entrained by the vaporous mixture leaving chamber **1** will be separated in the first half of the outermost spiral of the primary heating chamber **2** and drained back into the body of liquid fuel in tank **1**. Any liquid particles which are not thus separated, will be carried on with the vaporous mixture and due to the circulation of that mixture and the application of heat, will be vaporised before the vaporous mixture is introduced into the air tube **22** from the secondary heating chamber **21**. Thus only “dry” vapour is introduced into the engine cylinders and any burning in the engine cylinders of liquid particles of the fuel, which would tend to raise the engine temperature above its most efficient level, is avoided.

While the fullest benefits of the invention are obtained by using both a primary and secondary heating chamber, the primary heating chamber may, if desired, be eliminated and the vaporous mixture pumped directly from the vaporising and atomising chamber **1** into the spiral heating chamber **21**.

From the foregoing description it will be seen that the present invention provides an improvement over the carburettor disclosed in my Patent No. 1,997,497, in that it is possible to maintain the vaporous mixture in the heating chamber **21** under a predetermined pressure, and that as soon as the vaporous mixture is introduced into the main supply of air passing to the intake manifold of the engine, it will expand and reach a density at which it will form a more intimate mixture with the air. Furthermore, the introduction of the vaporous mixture into the air stream in the tube **22**, causes a certain amount of turbulence which also tends to give a more intimate mixture of vapour molecules with the air.

The High MPG Carburettor of Ivor Newberry

US Patent 2,218,922 22nd October 1940 Inventor: Ivor B. Newberry

VAPORIZER FOR COMBUSTION ENGINES

This patent describes a carburettor design which was able to produce very high mpg figures using the gasoline available in the USA in the 1930s but which is no longer available as the oil industry does not want functional high mpg carburettors to be available to the public.

DESCRIPTION

This invention relates to fuel vaporising devices for combustion engines and more particularly, is concerned with improvements in devices of the kind where provision is made for using the exhaust gasses of the engines as a heating medium to aid in the vaporisation of the fuel.

One object of the invention is to provide a device which will condition the fuel in such a manner that its potential energy may be fully utilised, thereby ensuring better engine performance and a saving in fuel consumption, and preventing the formation of carbon deposits in the cylinders of the engine and the production of carbon monoxide and other objectionable gasses.

A further object is to provide a device which is so designed that the fuel is delivered to the cylinders of the engine in a highly vaporised, dry and expanded state, this object contemplating a device which is available as an exhaust box in which the vaporisation and expansion of the liquid components is effected at sub-atmospheric pressures and prior to their being mixed with the air component.

A still further object is to provide a device which will condition the components of the fuel in such a manner that they be uniformly and intimately mixed without the use of a carburettor.

A still further object is to provide a device which will enable the use of various inferior and inexpensive grades of fuel.

DESCRIPTION OF THE DRAWINGS

Fig.1 is an elevational view of the device as applied to the engine of a motor vehicle.

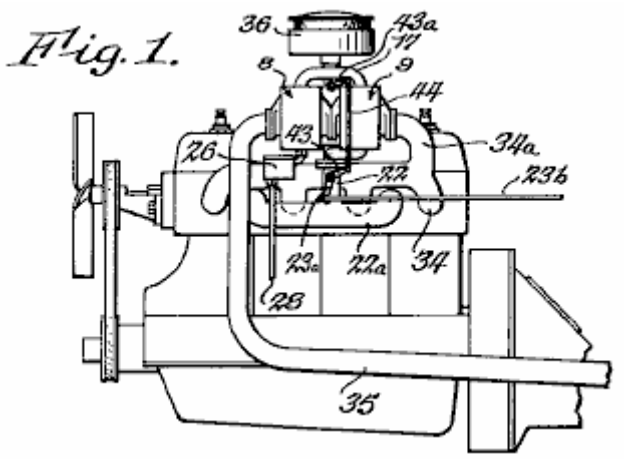

Fig.2 is an enlarged view of the device, partially in elevation and partially in section.

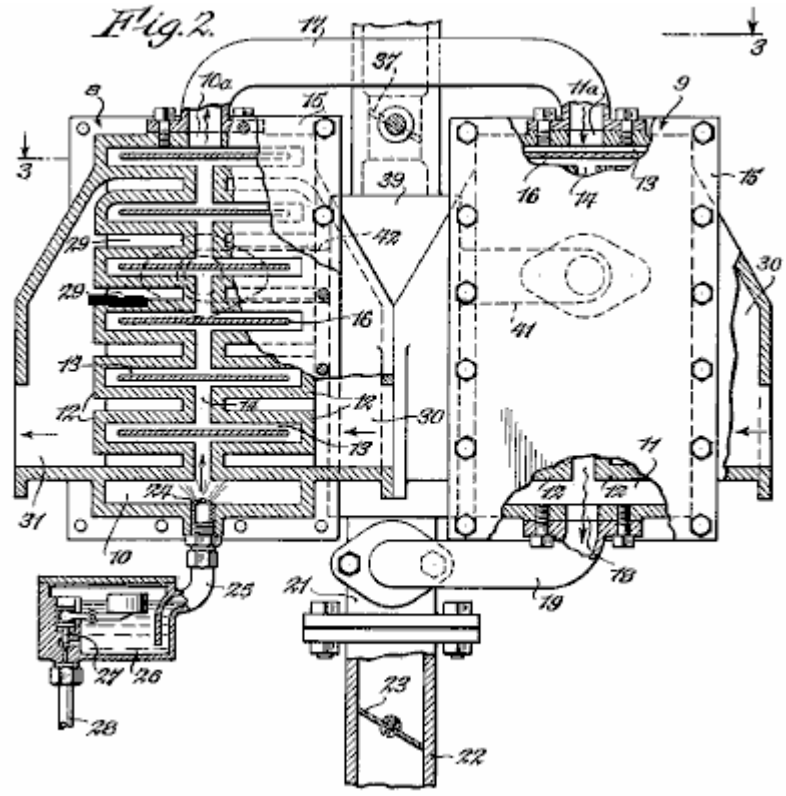

Fig.3 is a section taken along line 3--3 of Fig.2

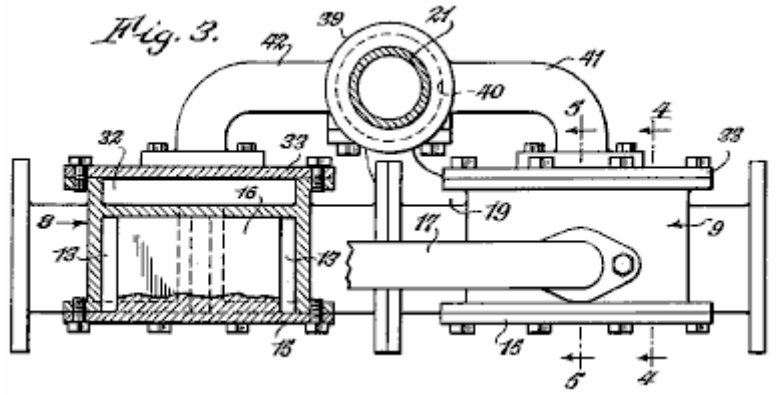

Fig.4 is a section taken along line 4--4 of Fig.3

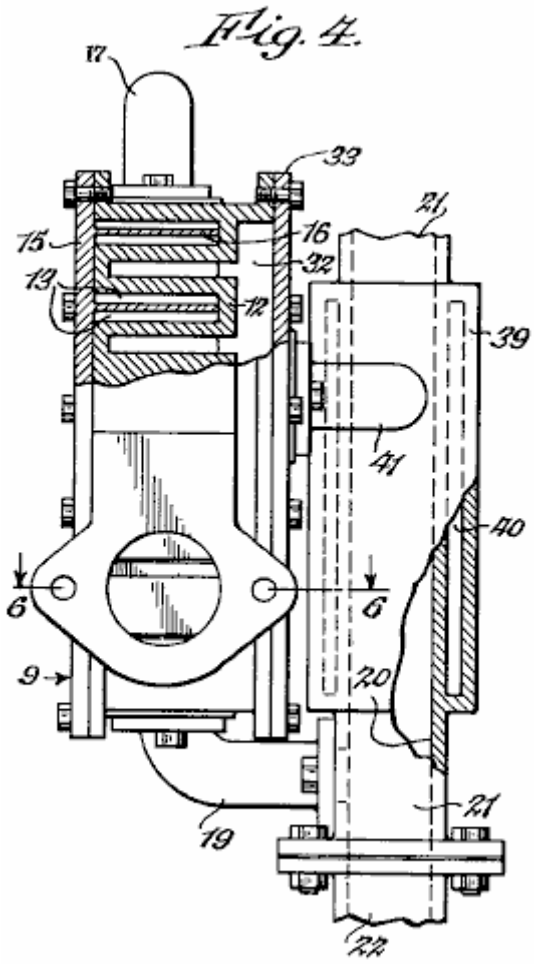

Fig.5 is a fragmentary section taken along line 5--5 of Fig.3

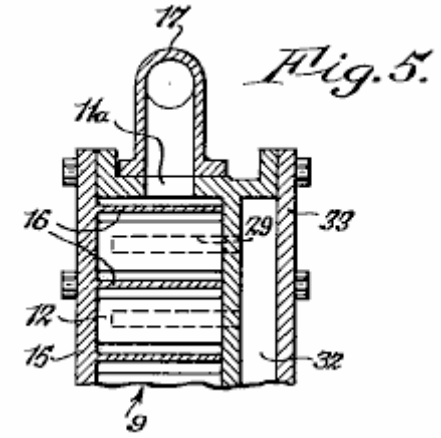

Fig.6 is a section taken along line 6--6 of Fig.4

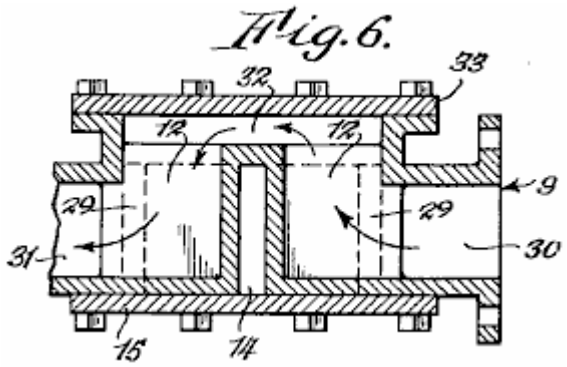

DESCRIPTION

The device as illustrated, includes similar casings **8** and **9** which are secured together as a unit and which are formed to provide vaporising chambers **10** and **11**, respectively, it being understood that the number of casings may be varied. Two series of ribs **12** are formed in each of the vaporising chambers, the ribs of each series being spaced from one another so as to provide branch passages **13** and being spaced from the ribs of the adjacent series to provide main passages **14** with which the branch passages communicate.

The vaporising chambers are closed by cover plates **15**. The cover plates carry baffles **16** which are supported in the spaces between the ribs **12**. The baffles extend across the main passages **14** and into, but short of the ends of the branch passages **13** to provide tortuous paths. Outlet **10a** of chamber **10** is connected by conduit **17** to inlet **11a** of chamber **11**. Outlet **18** of chamber **11**, is connected by conduit **19** with mixing chamber **20** which is located at the lower end of pipe **21** which in turn is connected to and extension **22** of the intake manifold **22a** of the engine. Extension **22** contains a valve **23** which is connected by a lever **23a** (**Fig.1**) and rod **23b** to a conventional throttle (not shown).

The liquid fuel is introduced into the vaporising chamber **10** through nozzle **24** which is connected by pipe **25** to a reservoir **26** in which the fuel level is maintained by float-controlled valve **27**, the fuel being supplied to the reservoir through pipe **28**.

In accordance with the invention, ribs **12** are hollow, each being formed to provide a cell **29**. The cells in one series of ribs open at one side into an inlet chamber **30**, while the cells of the companion series open at one side into an outlet chamber **31**. The cells of both series of ribs open at their backs into a connecting chamber **32** which is located behind the ribs and which is closed by a cover plate **33**. Casings **8** and **9** are arranged end-to-end so that the outlet chamber of **9** communicates with the inlet chamber of **8**, the gasses from the exhaust manifold **34** being introduced into the inlet chamber of casing **9** through extension **34a**. The exhaust gasses enter the series of cells at the right hand side of the casing, pass through the cells into the connecting chamber at the rear and then enter the inlet chamber of casing **8**. They pass successively through the two series of cells and enter exhaust pipe **35**. The exhaust gasses leave the outlet chamber **31**, and the path along which they travel is clearly shown by the arrows in **Fig.6**. As the gasses pass through casings **8** and **9**, their speed is reduced to such a degree that an exhaust box (muffler) or other silencing device is rendered unnecessary.

It will be apparent that when the engine is operating a normal temperature, the liquid fuel introduced into chamber **10** will be vaporised immediately by contact with the hot walls of ribs **12**. The vapour thus produced is divided into two streams, one of which is caused to enter each of the branch passages at one side of the casing and the other is caused to enter each of the branch passages at the opposite side of the casing. The two streams of vapour merge as they pass around the final baffle and enter conduit **17**, but are again divided and heated in a similar manner as they flow through casing **9**. Each of the vapour streams is constantly in contact with the highly heated walls of ribs **12**. This passage of the vapour through the casings causes the vapour to be heated to such a degree that a dry highly-vaporised gas is produced. In this connection, it will be noted that the vaporising chambers are maintained under a vacuum and that vaporisation is effected in the absence of air. Conversion of the liquid into highly expanded vapour is thus ensured. The flow of the exhaust gasses through casings **8** and **9** is in the opposite direction to the flow of the vapour. The vapour is heated in stages and is introduced into chamber **20** at its highest temperature.

The air which is mixed with the fuel vapour, enters pipe **21** after passing through a conventional filter **36**, the amount of air being regulated by valve **37**. The invention also contemplates the heating of the air prior to its entry into mixing chamber **20**. To this end, a jacket 39 is formed around pipe **21**. The jacket has a chamber **40** which communicates with chamber **32** of casing **9** through inlet pipe **41** and with the corresponding chamber of casing **8**

through outlet pipe **42**. A portion of the exhaust gasses is thus caused to pass through chamber **40** to heat the air as it passes through conduit **21** on its way to the mixing chamber. Valve **37** is connected to valve **23** by arms **43** and **43a** and link **44** so that the volume of air admitted to the mixing chamber is increased proportionately as the volume of vapour is increased. As the fuel vapour and air are both heated to a high temperature and are in a highly expanded state when they enter the mixing chamber, they readily unite to provide a uniform mixture, the use of a carburettor or similar device for this purpose being unnecessary.

From the foregoing it will be apparent that the components of the fuel mixture are separately heated prior to their entry into mixing chamber **20**. As the vapour which is produced is dry (containing no droplets of liquid fuel) and highly expanded, complete combustion is ensured. The potential energy represented by the vapour may thus be fully utilised, thereby ensuring better engine performance and a saving in fuel consumption. At the same time, the formation of carbon deposits in the combustion chambers and the production of carbon monoxide and other objectionable exhaust gasses is prevented. The device has the further advantage that, owing to the high temperature to which the fuel is heated prior to its admission into the combustion chambers, various inferior and inexpensive grades of fuel may be used with satisfactory results.

The High MPG Carburettor of Robert Shelton

US Patent 2,982,528 **2nd May 1940** **Inventor: Robert S. Shelton**

VAPOUR FUEL SYSTEM

This patent describes a carburettor design which was able to produce very high mpg figures using the gasoline available in the USA in the 1930s but which is no longer available as the oil industry does not want functional high mpg carburettors to be available to the public.

DESCRIPTION

This invention relates to improvements in vapour fuel systems which are to be used for internal combustion engines.

An object of this invention is to provide a vapour fuel system which will provide a great saving in fuel since approximately eight times the mileage that is obtained by the conventional combustion engine, is provided by the use of this system.

Another object of the invention is to provide a vapour fuel system which is provided with a reservoir to contain liquid fuel which is heated to provide vapour from which the internal combustion engine will operate.

With the above and other objects and advantages in view, the invention consists of the novel details of construction, arrangement and combination of parts more fully described below, claimed and illustrated in the accompanying drawings.

DESCRIPTION OF THE DRAWINGS

Fig.1 is an elevational view of a vapour fuel system embodying the invention.

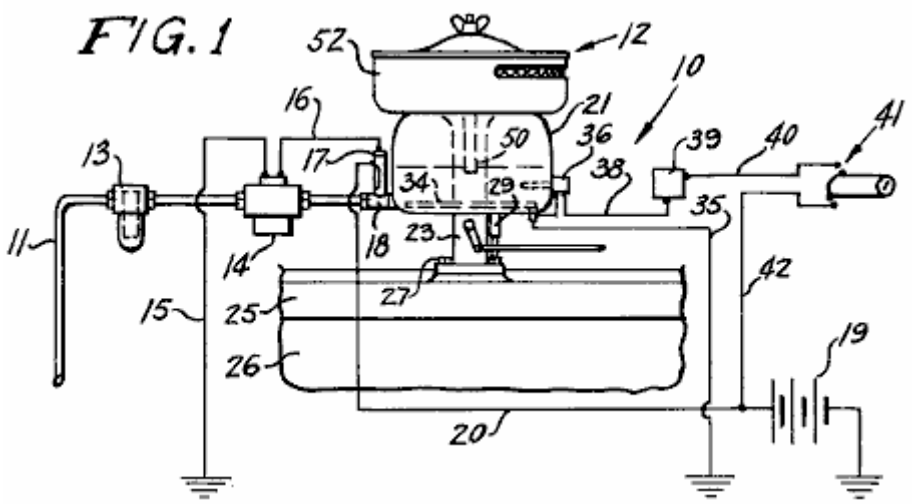

Fig.2 is an enlarged view, partly in section, showing the carburettor forming part of the system shown in Fig.1.

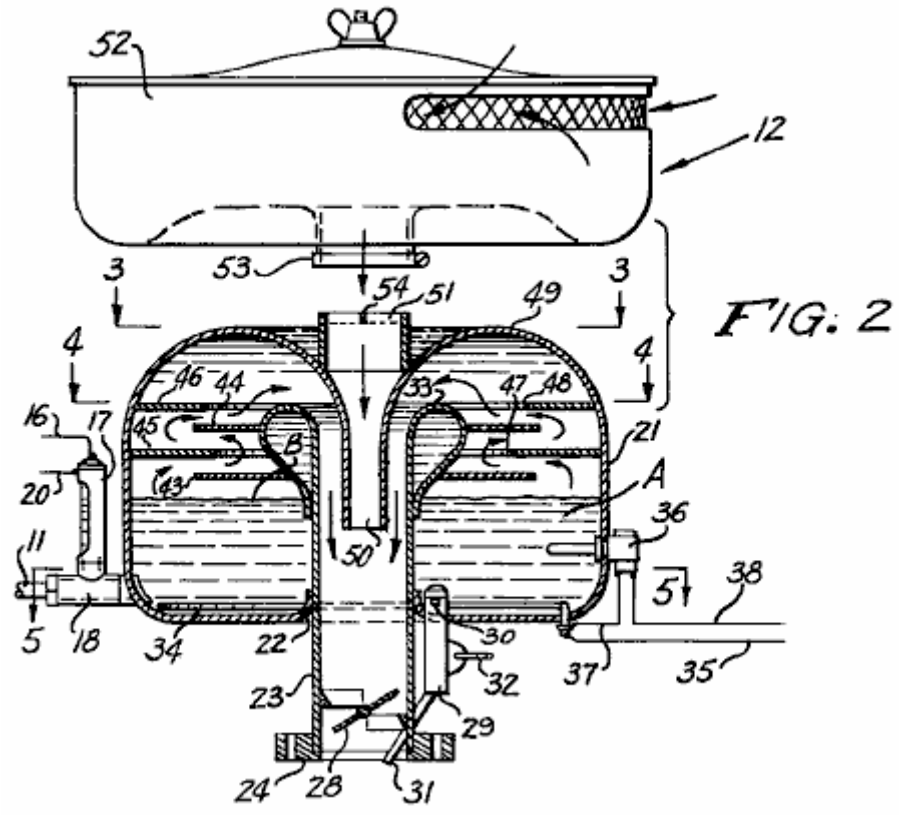

FIG. 2

Fig.3 is a transverse sectional view on line 3--3 of Fig.2

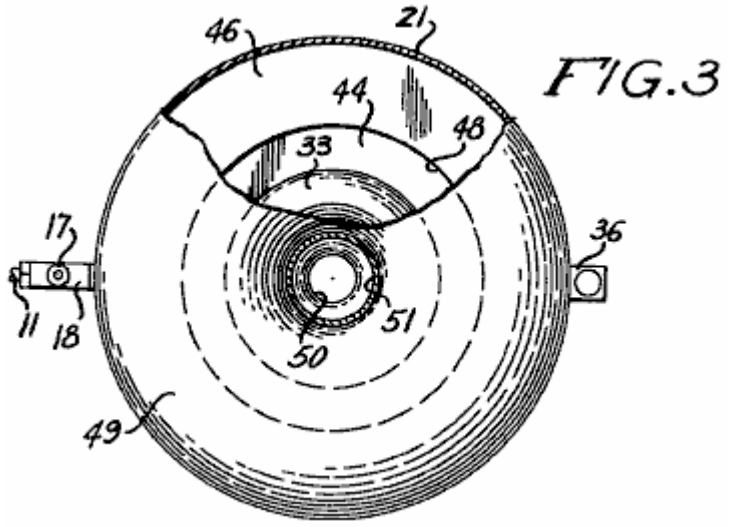

FIG.3

Fig.4 is a transverse sectional view on line 4--4 of Fig.2

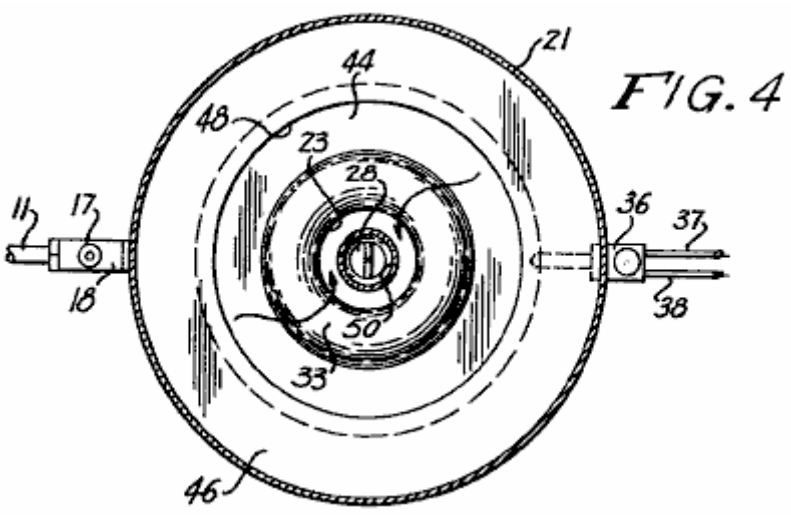

Fig.5 is a transverse sectional view on line 5--5 of Fig.2

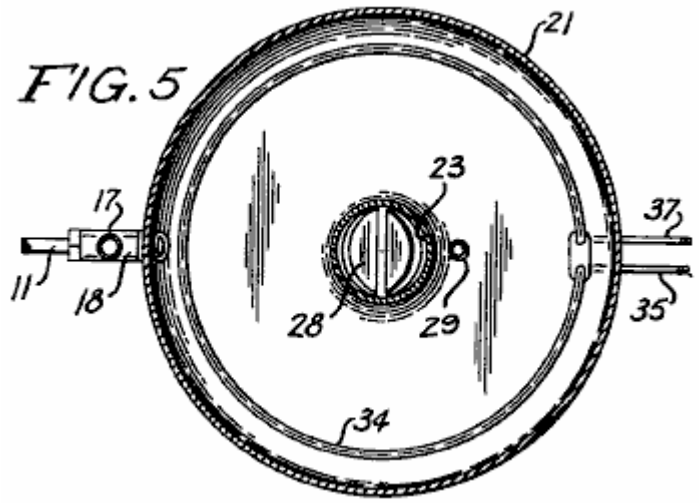

The reference numbers used in the drawings always refer to the same item in each of the drawings. The vapour fuel system **10** includes a conduit **11** which is connected to the fuel tank at one end and to a carburettor **12** at the opposite end. In conduit **11** there is a fuel filter **13** and an electric fuel pump **14**. Wire **15** grounds the pump and wire **16** connects the pump to a fuel gauge **18** on which is mounted a switch **17** which is connected to a battery **19** of the engine by wire **20**.

The fuel gauge/switch is of conventional construction and is of the type disclosed in US Patents No. 2,894,093, No. 2,825,895 and No. 2,749,401. The switch is so constructed that a float in the liquid in the gauge, opens a pair of contacts when the liquid rises and this cuts off the electric pump **14**. As the float lowers due to the consumption of the liquid fuel in the body, the float falls, closing the contacts and starting pump **14** which replenishes the liquid fuel in the body.

Carburettor **12** includes a dome-shaped circular bowl or reservoir **21** which is provided with a centrally located flanged opening **22** whereby the reservoir **21** is mounted on a tubular throat **23**. An apratured collar **24** on the lower end of throat **23** is positioned on the intake manifold **25** of an internal combustion engine **26** and fastenings **27** secure the collar to the manifold in a fixed position.

A vapour control butterfly valve **28** is pivotally mounted in the lower end of throat **23** and valve **28** controls the entrance of the vapour into the engine and so controls its speed.

A fuel pump **29**, having an inlet **30**, is mounted in the bottom of the reservoir 21 so that the inlet **30** communicates with the interior of the reservoir. A spurt or feed pipe **31** connected to pump **29** extends into throat **23** so that by means of a linkage **32** which is connected to pump **29** and to a linkage for control valve **28** and the foot throttle of the engine, raw fuel may be forced into throat **23** to start the engine when it is cold.

The upper end of throat **23** is turned over upon itself to provide a bulbous hollow portion **33** within reservoir **21**. An immersion heater **34** is positioned in the bottom of the reservoir and wire **35** grounds the heater. A thermostat **36** is mounted in the wall of the reservoir and extends into it. Wire **37** connects the thermostat to heater **34** and wire **38** connects the thermostat to the thermostat control **39**. Wire **40** connects the control to the ignition switch **41** which in turn is connected to battery **19** via wires **20** and **42**.

A pair of relatively spaced parallel perforated baffle plates **43** and **44**, are connected to the bulbous portion **33** on the upper end of throat **23**, and a second pair of perforated baffle plates **45** and **46** extend inwards from the wall of reservoir **21** parallel to each other and parallel to baffle plates **43** and **44**.

The baffle plates are arranged in staggered relation to each other so that baffle plate **45** is between baffle plates **43** and **44** and baffle plate **46** extends over baffle plate **44**.

Baffle plate **45** has a central opening **47** and baffle plate **46** has a central opening **48** which has a greater diameter than opening **47**. The domed top **49** of reservoir **21**, extends into a tubular air intake **50** which extends downwards into throat **23** and a mounting ring **51** is positioned on the exterior of the domed top, vertically aligned with intake **50**. An air filter **52** is mounted on the mounting ring **51** by a coupling **53** as is the usual procedure, and a spider **54** is mounted in the upper end of mounting ring **51** to break up the air as it enters ring **51** from air filter **52**.

In operation, with carburettor **12** mounted on the internal combustion engine instead of a conventional carburettor, ignition switch **41** is turned on. Current from battery **19** will cause pump **14** to move liquid fuel into reservoir **21** until float switch **18** cuts the pump off when the liquid fuel **A** has reached level **B** in the reservoir. The control **39** is adjusted so that thermostat **36** will operate heater **34** until the liquid fuel has reached a temperature of 105^0 F at which time heater **34** will be cut off. When the liquid fuel has reached the proper temperature, vapour will be available to follow the course indicated by the arrows in **Fig.2**.

The engine is then started and if the foot control is actuated, pump **29** will cause raw liquid fuel to enter the intake manifold **25** until the vapour from the carburettor is drawn into the manifold to cause the engine to operate. As the fuel is consumed, pump **14** will again be operated and heater **34** will be operated by thermostat **36**. Thus, the operation as described will continue as long as the engine is operating and the ignition switch **41** is turned on. Reservoir **21** will hold from 4 to 6 pints (2 to 4 litres) of liquid fuel and since only the vapour from the heated fuel will cause the carburettor **12** to run the engine, the engine will operate for a long time before more fuel is drawn into reservoir **21**.

Baffles **43**, **44**, **45** and **46** are arranged in staggered relation to prevent splashing of the liquid fuel within the carburettor. The level **B** of the fuel in reservoir **21** is maintained constant by switch **18** and with all elements properly sealed, the vapour fuel system **10** will operate the engine efficiently.

Valve **28** controlling the entrance of vapour into intake manifold **25**, controls the speed of the engine in the same manner as the control valve in a conventional carburettor.

There has thus been described a vapour fuel system embodying the invention and it is believed that the structure and operation of it will be apparent to those skilled in the art. It is also to be understood that changes in the minor details of construction, arrangement and combination of parts may be resorted to provided that they fall within the spirit of the invention.

The High MPG Carburettor of Harold Schwartz

US Patent 3,294,381 27th December 1966 Inventor: Harold Schwartz

CARBURETTOR

This patent describes a carburettor design which was able to produce very high mpg figures using the gasoline available in the USA at the time but which is no longer available as the oil industry does not want functional high mpg carburettors to be available to the public.

DESCRIPTION

This invention relates to a carburettor construction. An object of the present invention is to provide a carburettor in which the fuel is treated by the hot exhaust fumes of an engine before being combined with air and being fed into the engine.

Another object of the invention is to provide a carburettor as characterised above, which circulates the fume-laden fuel in a manner to free it of inordinately large globules of fuel, thereby insuring that only finely divided and pre-heated fuel of mist-like consistency is fed to the intake manifold of the engine.

The present carburettor, when used for feeding the six-cylinder engine of a popular car, improved the miles per gallon performance under normal driving conditions using a common grade of fuel, by over 200%. This increased efficiency was achieved from the pre-heating of the fuel and keeping it under low pressure imposed by suction applied to the carburettor for the purpose of maintaining the level of fuel during operation of the engine. This low pressure in the carburettor causes increased vaporisation of the fuel in the carburettor and raises the efficiency of operation.

This invention also has for its objects; to provide a carburettor which is positive in operation, convenient to use, easily installed in its working position, easily removed from the engine, economical to manufacture, of relatively simple design and of general superiority and serviceability.

The invention also comprises novel details of construction and novel combinations and arrangements of parts, which will appear more fully in the course of the following description and which is based on the accompanying drawings. However, the drawings and following description merely describes one embodiment of the present invention, and are only given as an illustration or example.

DESCRIPTION OF THE DRAWINGS

In the drawings, all reference numbers apply to the same parts in each drawing.

Fig.1 is a partly broken plan view of a carburettor constructed in accordance with the present invention, shown with a fuel supply, feeding and return system.

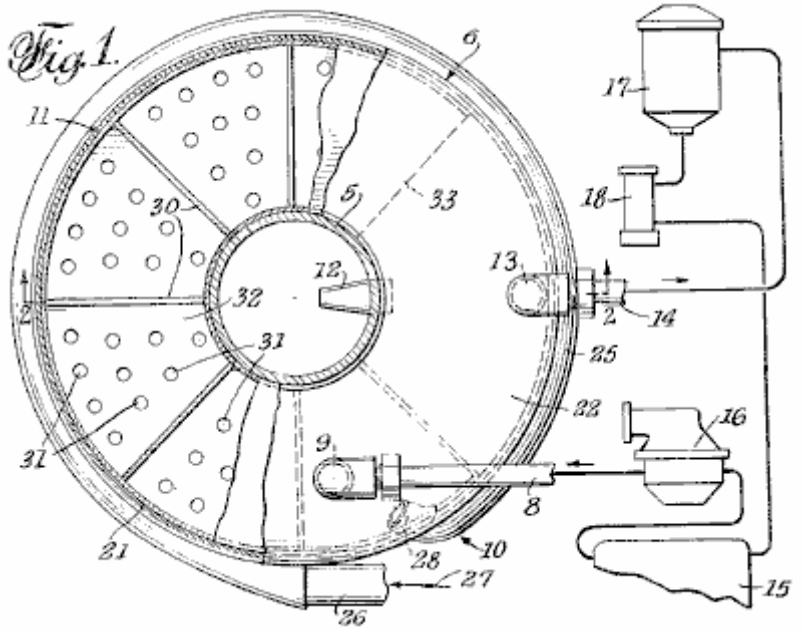

Fig.2 is a vertical sectional view of the carburettor taken on the plane of line 2--2 in Fig.1

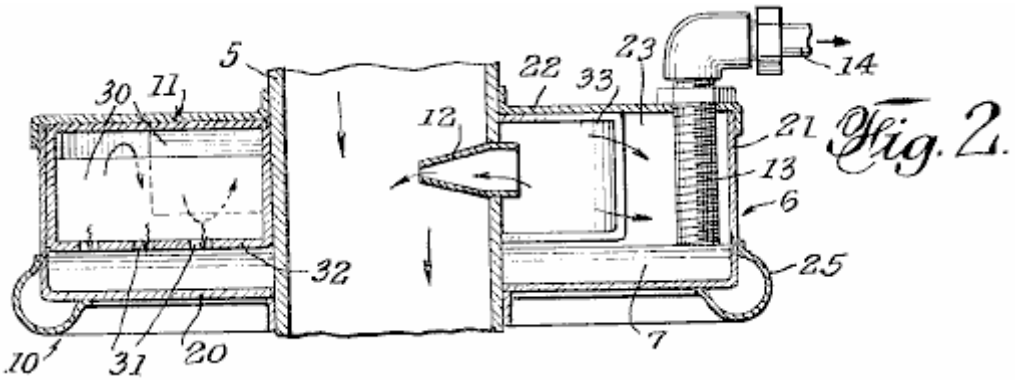

Fig.3 is a partial side elevation and partial sectional view of the carburettor, showing additional structural details

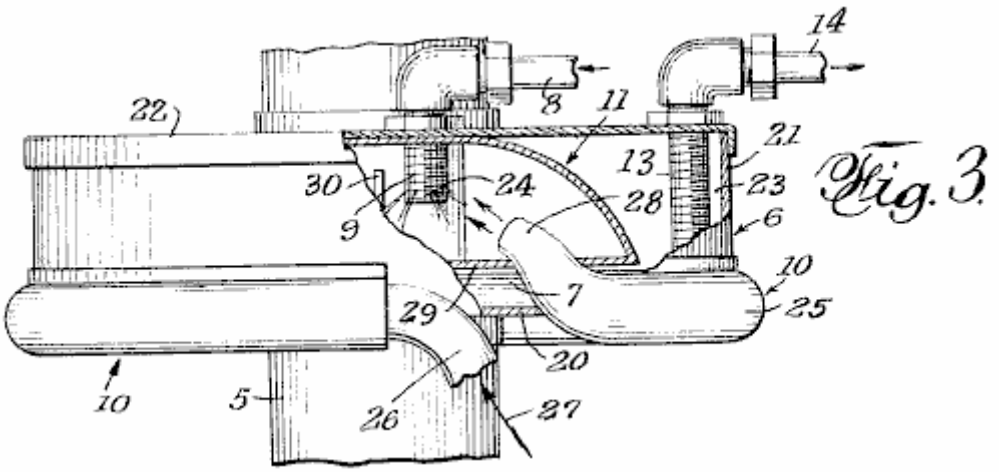

The carburettor is preferably mounted on the usual downdraft air tube **5** which receives a flow of air through the air filter. Tube **5** is provided with a throttle or butterfly valve which controls the flow and incorporates a flow-increasing venturi passage. These common features of the fuel feed to the engine intake manifold are not shown since these features are well known and they are also disclosed in my pending Patent application Serial No.

182,420 now abandoned. The present carburettor embodies improvements over the disclosure of the earlier application.

The present carburettor comprises a housing **6** mounted on air tube **5**, and designed to hold a shallow pool of fuel **7**, a fuel inlet **8** terminating in a spray nozzle **9**, an exhaust gas manifold **10** to conduct heated exhaust gasses for discharge into the spray of fuel coming out of nozzle **9** and for heating the pool of fuel **7** underneath it. Means **11** to scrub the fuel-fumes mixture to eliminate large droplets of fuel from the mixture (the droplets fall into pool **7** underneath), a nozzle tube **12** to receive the scrubbed mixture and to pass the mixture under venturi action into air tube **5** where it is combined with air and made ready for injection into the intake manifold of the engine. Pickup pipe **13** is connected to an outlet **14** for drawing excess fuel from pool **7** during operation of the carburettor.

The system connected to the carburettor is shown in **Fig.1**, and comprises a fuel tank **15**, a generally conventional fuel pump **16** for drawing fuel from the tank and directing it to inlet **8**, a fuel filter **17**, and a pump **18** connected in series between the fuel tank and outlet **14** to place pipe **13** under suction and to draw excess fuel from the carburettor back to tank **15** for re-circulation to inlet **8**.

Carburettor housing **6** may be circular, as shown and quite flat compared to its diameter, so as to have a large flat bottom **20** which, with the cylindrical wall **21**, holds the fuel pool **7**. Cover **22** encloses the top of the housing. The bottom **20** and cover **22** have aligned central openings through which the downdraft tube **5** extends, this pipe forming the interior of the housing, creating an annular inner space **23**.

The fuel inlet **8** is attached to cover **22** by a removable connection. Spray nozzle **9** extends through the cover. While the drawing shows spray-emitting holes **24** arranged to provide a spray around nozzle 7, the nozzle may be formed so that the spray is directional as desired to achieve the most efficient interengagement of the sprayed fuel with the heating gasses supplied by the manifold **10**.

The manifold is shown as a pipe **25** which has and end **26** extending from the conventional heat riser chamber (not shown) of the engine, the arrow **27** indicating exhaust gas flow into pipe **25**. The pipe may encircle the lower portion of the housing **6**, to heat the pool of fuel **7** by transfer of heat through the wall of the housing. The manifold pipe is shown with a discharge end **28** which extends into the housing in an inward and upward direction towards nozzle **9** so that the exhaust gasses flowing in the pipe intermingle with the sprayed fuel and heat it as it leaves the nozzle.

The fuel-scrubbing means **11** is shown as a curved chamber **29** located inside housing **6**, provided with a series of baffle walls **30** which cause the fumes-heated fuel mist to follow a winding path and intercept the heavier droplets of fuel which then run down the faces of the baffle walls, through openings **31** in the bottom wall **32** of scrubbing chamber **29** into the interior space **23** of housing **6** above the level of the fuel pool **7**.

Pickup pipe **13** is also shown as carried by housing cover **22** and may be adjusted so that its lower open end is so spaced from the housing bottom **20** as to regulate the depth of pool **7**, which is preferably below the bottom wall **32** of the scrubbing chamber **29**. Since this pipe is subject to the suction of pump **18** through outlet **14** and filter **17**, the level of pool **7** is maintained by excess fuel being returned to tank **15** by pump **16**.

It will be seen that the surface of pool **7** is subject not only to the venturi action in tube **5**, but also to the suction of pump **18** as it draws excess fuel back to fuel tank **15**. Thus, the surface of the pool is under somewhat less than atmospheric pressure which increases the rate of vaporisation from the pool surface, the resulting vapour combining with the flow from the scrubbing chamber to the downdraft tube **5**..

While this description has illustrated what is now contemplated to be the best mode of carrying out the invention, the construction is, of course, subject to modification without departing from the spirit and scope of the invention. Therefore, it is not desired to restrict the invention to the particular form of construction illustrated and described, but to cover all modifications which may fall within its scope.

The High MPG Carburettor of Oliver Tucker

US Patent 3,653,643 4th April 1972 Inventor: Oliver M. Tucker

CARBURETTOR

This patent describes a carburettor design which was able to produce very high mpg figures using the gasoline available in the USA at the time but which is no longer available as the oil industry does not want functional high mpg carburettors to be available to the public.

ABSTRACT

A carburettor including a housing having a fluid reservoir in the bottom, an air inlet at the top of the housing, a delivery pipe coaxially mounted within the housing and terminating short of the top of the housing, and a porous vaporising filter substantially filling the reservoir. A baffle is concentrically mounted within the housing and extends partially into the vaporising filter in the reservoir to deflect the incoming air through the filter. The level of liquid fuel in the reservoir is kept above the bottom of the baffle, so that air entering the carburettor through the inlet must pass through the liquid fuel and vaporising filter in the reservoir before discharge through the outlet. A secondary air inlet is provided in the top of the housing for controlling the fuel air ratio of the vaporised fuel passing into the delivery pipe.

BACKGROUND OF THE INVENTION

It is generally well known that liquid fuel must be vaporised in order to obtain complete combustion. Incomplete combustion of fuel in internal combustion engines is a major cause of atmospheric pollution. In a typical automotive carburettor, the liquid fuel is atomised and injected into the air stream in a manifold of approximately 3.14 square inches in cross-sectional area. In an eight cylinder 283 cubic inch engine running at approximately 2,400 rpm requires 340,000 cubic inches of air per minute. The air velocity in the intake manifold at this engine speed will be approximately 150 feet per second and it will therefore take approximately 0.07 seconds for a particle of fuel to move from the carburettor to the combustion chamber and the fuel will remain in the combustion chamber for approximately 0.0025 seconds.

It is conceivable that in this short period of time, complete vaporisation of the fuel is not achieved and as a consequence, incomplete combustion occurs, resulting in further air pollution. The liquid fuel particles if not vaporised, can deposit on the cylinder walls and dilute the lubricating oil film there, promoting partial burning of the lubricating oil and adding further to the pollution problem. Destruction of the film of lubricating oil by combustion can also increase mechanical wear of both cylinders and piston rings.

SUMMARY OF THE INVENTION

The carburettor of this invention provides for the complete combustion of liquid fuel in an internal combustion engine, with a corresponding decrease of air pollutant in the exhaust gasses. This is achieved by supplying completely vaporised or dry gas to the combustion chamber. The primary air is initially filtered prior to passing through a vaporising filter which is immersed in liquid fuel drawn from a reservoir in the carburettor. The vaporising filter continuously breaks the primary air up into small bubbles thereby increasing the surface area available for evaporation of the liquid fuel. Secondary air is added to the enriched fuel-air mixture through a secondary air filter prior to admission of the fuel-air mixture into the combustion chambers of the engine. Initial filtration of both the primary and secondary air removes any foreign particles which may be present in the air, and which could cause increased wear within the engine. The carburettor also assures delivery of a clean dry gas to the engine due to the gravity separation of any liquid or dirt particles from the fuel-enriched primary air.

Other objects and advantages will become apparent from the following detailed description when read in conjunction with the accompanying drawing, in which the single figure shows a perspective cross-sectional view of the carburettor of this invention.

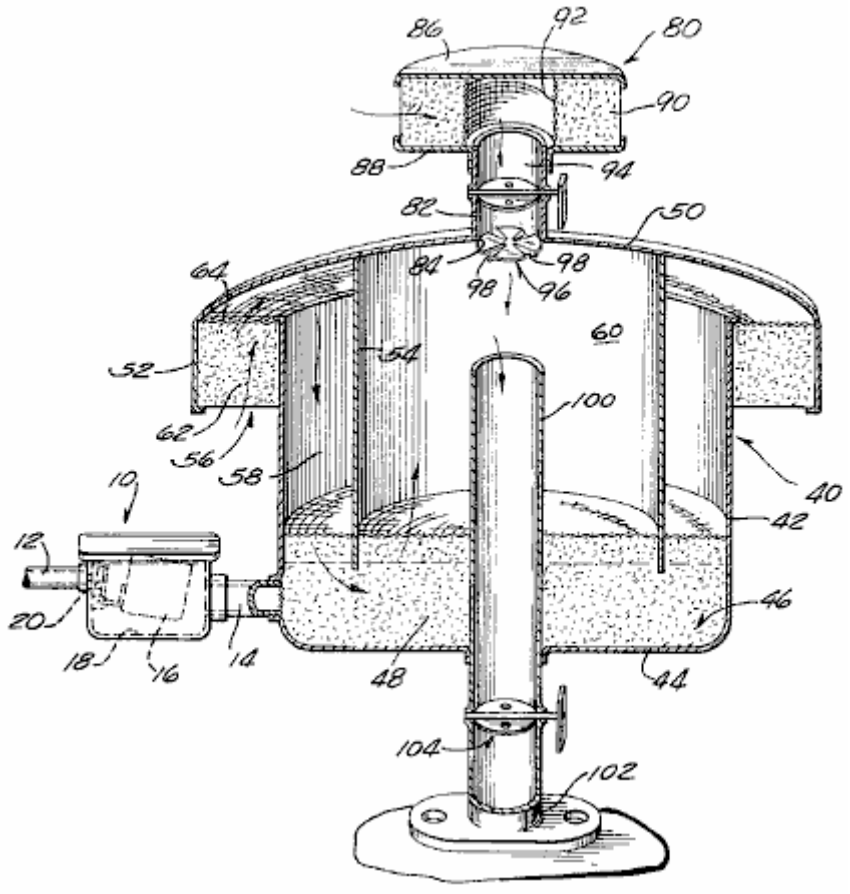

DESCRIPTION OF THE INVENTION

The carburettor **40** disclosed here is adapted for use with an internal combustion engine where air is drawn through the carburettor to vaporise the fuel in the carburettor prior to its admission to the engine.

In this regard, the flow of liquid fuel, gas or oil, to the carburettor is controlled by means of a float valve assembly **10** connected to a source of liquid fuel by fuel line **12** and to the carburettor **40** by a connecting tube **14**. The flow of liquid fuel through the float valve assembly **10** is controlled by a float **16**, pivotally mounted within a float chamber **18** and operatively connected to a float valve **20**.

In accordance with the invention, the liquid fuel admitted to the carburettor **40** through tube **14**, is completely evaporated by the primary air for the engine within the carburettor and mixed with secondary air prior to admission into a delivery tube **100** which is connected to the manifold **102** of the engine. More specifically, carburettor **40** includes a cylindrical housing or pan **42**, having a bottom wall **44** which forms a liquid fuel and filter reservoir **46**. A vaporising filter **48** is positioned within reservoir **46** and extends upwards for a distance from the bottom wall **44** of the housing **42**. The vaporising filter **48** is used to continuously break up the primary air into a large number of small bubbles as it passes through the liquid fuel in reservoir **46**. This increases the surface area per volume of air available for evaporation of the liquid fuel, as described in more detail below. This filter **48** is formed of a three-dimensional skeletal material that is washable and is not subject to breakdown under the operating conditions inside the carburettor. A foamed cellular plastic polyurethane filter having approximately 10 to 20 pores per inch has been used successfully in the carburettor.

Housing **42** is closed at the top by a hood or cover **50** which can be secured in place by any appropriate means. The hood has a larger diameter than the diameter of housing **42** and includes a descending flange **52** and a descending baffle **54**. Flange **52** is concentrically arranged and projects outwards beyond the sides of housing **42** to form a primary air inlet **56**. Baffle **54** is concentrically positioned inside housing **42** to create a primary air chamber **58** and a central mixing chamber **60**.

Primary air is drawn into housing **42** through air inlet **56** and is filtered through primary air filter **62** which is removably mounted in the space between flange **52** and the outside of the wall of housing **42** by means of a screen **64**. The primary air filter **62** can be made of the same filtering material as the vaporising filter **48**.

As the primary air enters the primary air chamber **58** it is deflected through the liquid fuel in reservoir **46** by means of the cylindrical baffle **54**. This baffle extends down from hood **50** far enough to penetrate the upper portion of the vaporising filter **48**. The primary air must pass around the bottom of baffle **54** and through both the liquid fuel and the vaporising filter **48** prior to entering the mixing chamber **60**.

The level of the liquid fuel in reservoir **46** is maintained above the bottom edge of baffle **54** by means of the float valve assembly **10**. The operation of the float valve assembly **10** is well known. Float chamber **18** is located at approximately the same level as reservoir **46** and float **16** pivots in response to a drop in the level of the liquid fuel in the float chamber and opens the float valve **20**.

One of the important features of the present invention is the efficiency of evaporation of the liquid fuel by the flow of the large number of bubbles through the reservoir. This is believed to be caused by the continual break up of the bubbles as they pass through the vaporising filter **48**. It is well known that the rate of evaporation caused by a bubble of air passing unmolested through a liquid, is relatively slow due to the surface tension of the bubble. However, if the bubble is continuously broken, the surface tension of the bubble is reduced and a continual evaporating process occurs. This phenomenon is believed to be the cause of the high evaporation rate of the liquid fuel in the carburettor of this invention.

Another feature of the carburettor of this invention is its ability to supply dry gas to the central mixing chamber **60** in housing **42**. Since the flow of primary air in the central mixing chamber **60** is vertically upwards, the force of gravity will prevent any droplets of liquid fuel from rising high enough in the carburettor to enter the delivery tube **100**. The delivery of dry gas to the delivery tube increases the efficiency of combustion and thereby reduces the amount of unburnt gasses or pollutants which are exhausted into the air by the engine.

Means are provided for admitting secondary air into the central mixing chamber **60** to achieve the proper fuel-air ratio required for complete combustion. Such means is in the form of a secondary air filter assembly **80** mounted on an inlet tube **82** provided in opening **84** in hood **50**. The secondary air filter assembly **80** includes an upper plate **86**, a lower plate **88**, and a secondary air filter **90** positioned between plates **86** and **88**. The secondary air filter **90** is prevented from being drawn into inlet tube **82** by means of a cylindrical screen **92** which forms a continuation of tube **82**. The secondary air passes through the outer periphery of the secondary air filter **90**, through screen **92** and into tube **82**. The flow of secondary air through tube **82** is controlled by means of a butterfly valve **94** as is generally understood in the art.

Complete mixing of the dry gas-enriched primary air with the incoming secondary air within housing **42**, is achieved by means of deflector **96** positioned at the end of tube **82**. Deflector **96** includes a number of vanes **98** which are twisted to provide an outwardly-deflected circular air flow into the central mixing chamber **60** and thereby creating an increase in the turbulence of the secondary air as it combines with the fuel-enriched primary air. The deflector prevents cavitation from occurring at the upper end of the outlet tube **100**.

The flow of fuel-air mixture to the engine is controlled by means of a throttle valve **104** provided in the outlet or delivery tube **100**. The operation of the throttle valve **104** and butterfly valve **94** are both controlled in a conventional manner.

THE OPERATION OF THE CARBURETTOR

Primary air is drawn into housing **42** through primary air inlet **56** and passes upwards through primary air filter **62** where substantially all foreign particles are removed from the primary air. The filtered primary air then flows downwards through primary air chamber **58**, under baffle **54**, through fuel filter reservoir **46**, and upwards into central mixing chamber **60**. All of the primary air passes through the vaporising filter **48** provided in reservoir **46**. The vaporising filter **48** continuously breaks the primary air stream into thousands of small bubbles, reducing surface tension and increasing the air surface available for evaporation of the liquid fuel. Since the outer surface of each bubble is being constantly broken up by the vaporising filter **48** and is in constant contact with the liquid fuel as the bubble passes through the vaporising filter **48**, there is a greater opportunity for evaporation of the fuel prior to entering the central mixing chamber **60**. The vertical upward flow of the fuel-enriched primary air in the central mixing chamber, ensures that no liquid fuel droplets will be carried into the delivery tube **100**.

The fuel-enriched primary air is thoroughly mixed with the secondary air entering through tube **82** by means of the deflector system **96** which increases the turbulence of the primary and secondary air within the central mixing chamber and prevents cavitation from occurring in delivery tube **100**. The completely mixed fuel-enriched primary air and the secondary air then pass through delivery tube **100** into the inlet manifold of the engine.

The High MPG Carburettor of Thomas Ogle

US Patent 4,177,779 11th December 1979 Inventor: Thomas H. Ogle

FUEL ECONOMY SYSTEM FOR AN INTERNAL COMBUSTION ENGINE

This patent describes a carburettor design which was able to produce very high mpg figures using the gasoline available in the USA at the time but which is no longer available as the oil industry does not want functional high mpg carburettors to be available to the public.

ABSTRACT

A fuel economy system for an internal combustion engine which, when installed in a motor vehicle, overcomes the need for a conventional carburettor, fuel pump and fuel tank. The system operates by using the engine vacuum to draw fuel vapours from a vapour tank through a vapour conduit to a vapour equaliser which is positioned directly over the intake manifold of the engine. The vapour tank is constructed of heavy duty steel, or the like, to withstand the large vacuum pressure and includes an air inlet valve coupled for control to the accelerator pedal. The vapour equaliser ensures distribution of the correct mixture of air and vapour to the cylinders of the engine for combustion, and also includes its own air inlet valve coupled for control to the accelerator pedal. The system utilises vapour-retarding filters in the vapour conduit, vapour tank and vapour equaliser to deliver the correct vapour/air mixture for proper operation. The vapour tank and fuel contained in it, are heated by running the engine coolant through a conduit within the tank. Due to the extremely lean fuel mixtures used by the present invention, gas mileage in excess of one hundred miles per gallon may be achieved.

BACKGROUND OF THE INVENTION

1. Field of the Invention

The present invention is related to internal combustion engines and, more particularly, is directed towards a fuel economy system for an internal combustion engine which, when applied to a motor vehicle, overcomes the need for conventional carburettors, fuel pumps and fuel tanks, and enables vastly improved fuel consumption to be achieved.

2. Description of the Prior Art

The prior art evidences many different approaches to the problem of increasing the efficiency of an internal combustion engine. Due to the rising price of fuel, and the popularity of motor vehicles as a mode of transportation, much of the effort in this area is generally directed towards improving fuel consumption for motor vehicles. Along with increased mileage, much work has been done with a view towards reducing pollutant emissions from motor vehicles.

I am aware of the following United States patents which are generally directed towards systems for improving the efficiency and/or reducing the pollutant emissions of internal combustion engines:

Chapin	1,530,882
Crabtree et al	2,312,151
Hietrich et al	3,001,519
Hall	3,191,587
Wentworth	3,221,724
Walker	3,395,681
Holzappfel	3,633,533
Dwyre	3,713,429
Herpin	3,716,040
Gorman, Jr.	3,728,092
Alm et al	3,749,376
Hollis, Jr.	3,752,134
Buckton et al	3,759,234
Kihn	3,817,233
Shih	3,851,633

Burden, Sr.	3,854,463
Woolridge	3,874,353
Mondt	3,888,223
Brown	3,907,946
Lee, Jr.	3,911,881
Rose et al	3,931,801
Reimuller	3,945,352
Harpman	3,968,775
Naylor	4,003,356
Fortino	4,011,847
Leshner et al	4,015,569
Sommerville	4,015,570

The Chapin U.S. Pat. No. 1,530,882 discloses a fuel tank surrounded by a water jacket, the latter of which is included in a circulation system with the radiator of the automobile. The heated water in the circulation system causes the fuel in the fuel tank to readily vaporise. Suction from the inlet manifold causes air to be drawn into the tank to bubble air through the fuel to help form the desired vapour which is then drawn to the manifold for combustion.

The Buckton et al U.S. Pat. No. 3,759,234 advances a fuel system which provides supplementary vapours for an internal combustion engine by means of a canister that contains a bed of charcoal granules. The Wentworth and Hietrich et al U.S. Pat. Nos. 3,221,724 and 3,001,519 also teach vapour recovery systems which utilise filters of charcoal granules or the like.

The Dwyre U.S. Pat. No. 3,713,429 uses, in addition to the normal fuel tank and carburettor, an auxiliary tank having a chamber at the bottom which is designed to receive coolant from the engine cooling system for producing fuel vapours, while the Walker U.S. Pat. No. 3,395,681 discloses a fuel evaporator system which includes a fuel tank intended to replace the normal fuel tank, and which includes a fresh air conduit for drawing air into the tank.

The Fortino U.S. Pat. No. 4,011,847 teaches a fuel supply system wherein the fuel is vaporised primarily by atmospheric air which is released below the level of the fuel, while the Crabtree et al U.S. Pat. No. 2,312,151 teaches a vaporisation system which includes a gas and air inlet port located in a vaporising chamber and which includes a set of baffles for effecting a mixture of the air and vapour within the tank. The Mondt U.S. Pat. No. 3,888,223 also discloses an evaporative control canister for improving cold start operation and emissions, while Sommerville U.S. Pat. No. 4,015,570 teaches a liquid-fuel vaporiser which is intended to replace the conventional fuel pump and carburettor that is designed to mechanically change liquid fuel to a vapour state.

While the foregoing patents evidence a proliferation of attempts to increase the efficiency and/or reduce pollutant emissions from internal combustion engines, no practical system has yet found its way to the marketplace.

OBJECTS AND SUMMARY OF THE INVENTION

It is therefore a primary object of the present invention to provide a new and improved fuel economy system for an internal combustion engine which greatly improves the efficiency of the engine.

Another object of the present invention is to provide a unique fuel economy system for an internal combustion engine which provides a practical, operative and readily realisable means for dramatically increasing the gas mileage of conventional motor vehicles.

A further object of the present invention is to provide an improved fuel economy system for internal combustion engines which also reduces the pollutant emissions.

The foregoing and other objects are attained in accordance with one aspect of the present invention through the provision of a fuel vapour system for an internal combustion engine having an intake manifold, which comprises a tank for containing fuel vapour, a vapour equaliser mounted on and in fluid communication with the intake manifold of the engine, and a vapour conduit which connect the tank to the vapour equaliser for delivering fuel vapour from the former to the latter. The vapour equaliser includes a first valve connected to it for controlling the admission of air to the vapour equaliser, while the tank has a second valve connected to it for controlling the admission of air to the tank. A throttle controls the first and second valves so that the opening of the first valve preceeds and exceeds the opening of the second valve during operation.

In accordance with other aspects of the present invention, a filter is positioned in the vapour conduit to retard the flow of fuel vapour from the tank to the vapour equaliser. In a preferred form, the filter comprises carbon particles and may include a sponge-like collection of, for example, neoprene fibres. In a preferred embodiment, the filter comprises a substantially tubular housing positioned in series in the vapour conduit, the housing containing a central portion comprising a mixture of carbon and neoprene, and end portions comprising carbon, positioned on each side of the central portion.

In accordance with another aspect of the present invention, a second filter is positioned in the vapour equaliser for again retarding the flow of the fuel vapour to the engine intake manifold. The second filter is positioned downstream of the first valve and in a preferred form, includes carbon particles mounted in a pair of recesses formed in a porous support member. The porous support member, which may comprise neoprene, includes a first recessed portion positioned opposite a vapour inlet port in the vapour equaliser to which the vapour conduit is connected, while a second recessed portion is positioned opposite the intake manifold of the engine.

In accordance with still other aspects of the present invention, a third filter is positioned in the tank for controlling the flow of fuel vapour into the vapour conduit in proportion to the degree of vacuum in the tank. The filter more particularly comprises a mechanism for reducing the amount of fuel vapour delivered to the vapour conduit when the engine is idling and when the engine has attained a steady speed. The throttle acts to close the second valve when the engine is idling and when the engine has attained a steady speed, to thereby increase the vacuum pressure in the tank. In a preferred form, the third filter comprises a frame pivotally mounted within the tank and movable between first and second operating positions. The first operating position corresponds to an open condition of the second valve, while the second operating position corresponds to a closed condition of the second valve. The tank includes a vapour outlet port to which one end of the vapour conduit is connected, such that the second operating position of the frame places the third filter in communication with the vapour outlet port.

More particularly, the third filter in a preferred form includes carbon particles sandwiched between two layers of a sponge-like filter material, which may comprise neoprene, and screens for supporting the layered composition within the pivotable frame. A conduit is positioned on the third filter for placing it in direct fluid communication with the vapour outlet port when the frame is in its second operating position.

In accordance with yet other aspects of the present invention, a conduit is connected between the valve cover of the engine and the vapour equaliser for directing the oil blow-by to the vapour equaliser in order to minimise valve clatter. The tank also preferably includes a copper conduit positioned in the bottom of it, which is connected in series with the cooling system of the motor vehicle, for heating the tank and generating more vapour. A beneficial by-product of the circulating system reduces the engine operating temperature to further improve operating efficiency.

BRIEF DESCRIPTION OF THE DRAWINGS

Various objects, features and attendant advantages of the present invention will be more fully appreciated as the same become better understood from the following detailed description of the present invention when considered in connection with the accompanying drawings, in which:

Fig.1 is a perspective view illustrating the various components which together comprise a preferred embodiment of the present invention as installed in a motor vehicle;

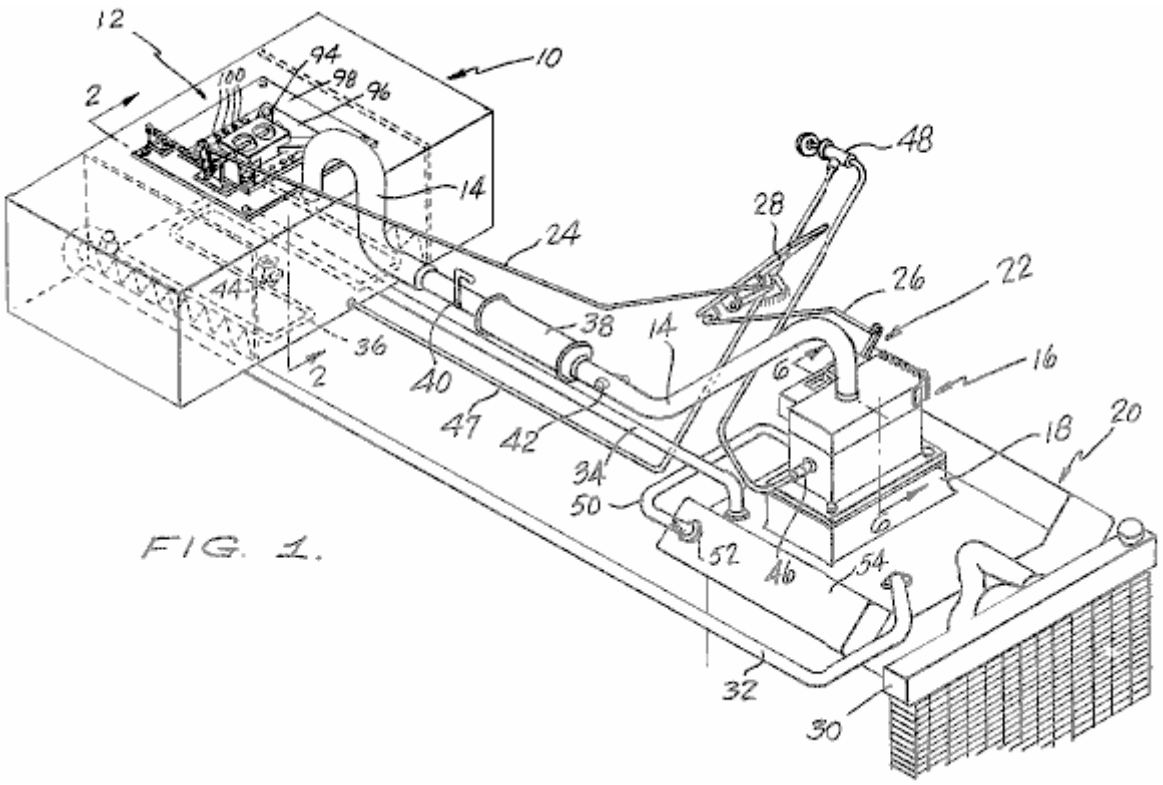

Fig.2 is a cross-sectional view of one of the components of the preferred embodiment illustrated in Fig.1 taken along line 2--2

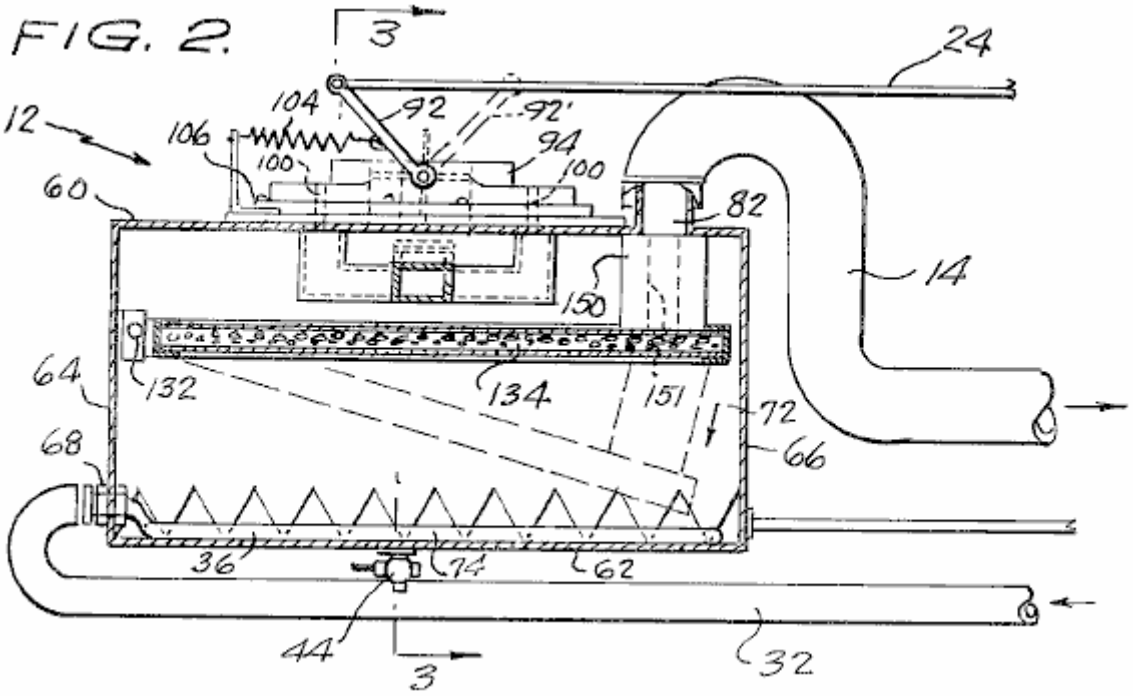

Fig.3 is a sectional view of the vapour tank illustrated in Fig.2 taken along line 3--3

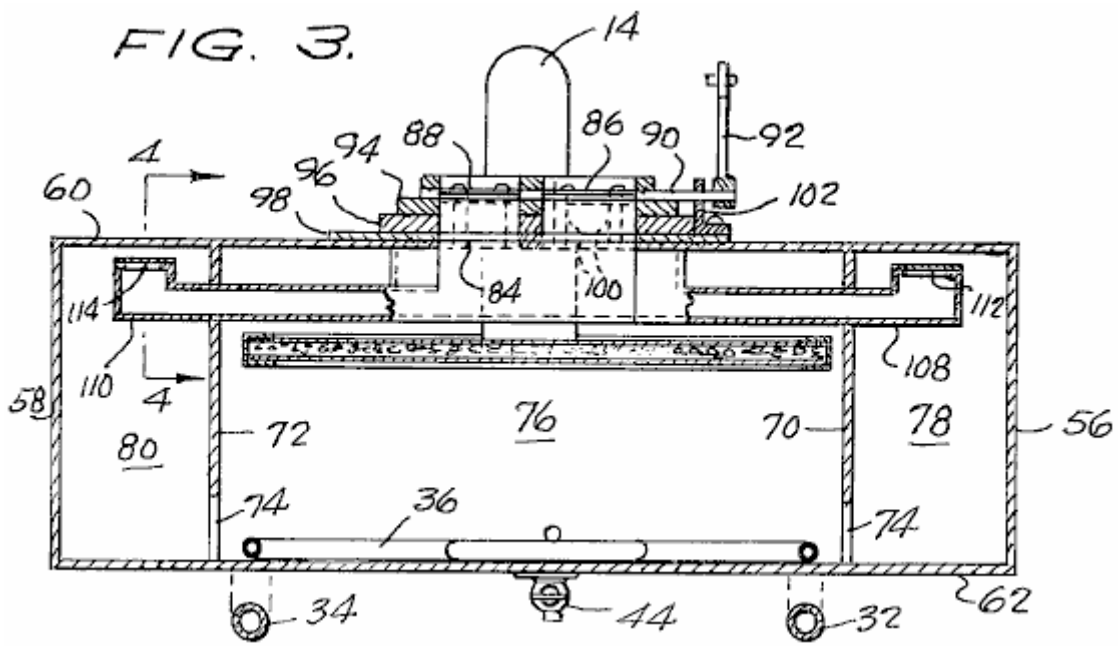

Fig.4 is an enlarged sectional view illustrating in greater detail one component of the vapour tank shown in Fig.3 taken along line 4--4

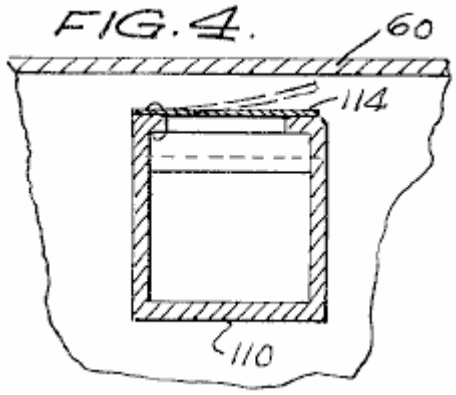

Fig.5 is a perspective, partially sectional view illustrating a filter component of the vapour tank illustrated in Fig.2

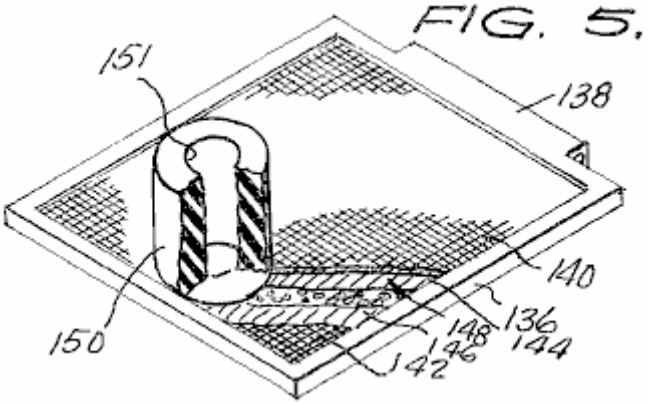

Fig.6 is a cross-sectional view of another component of the preferred embodiment of the present invention illustrated in Fig.1 taken along line 6--6

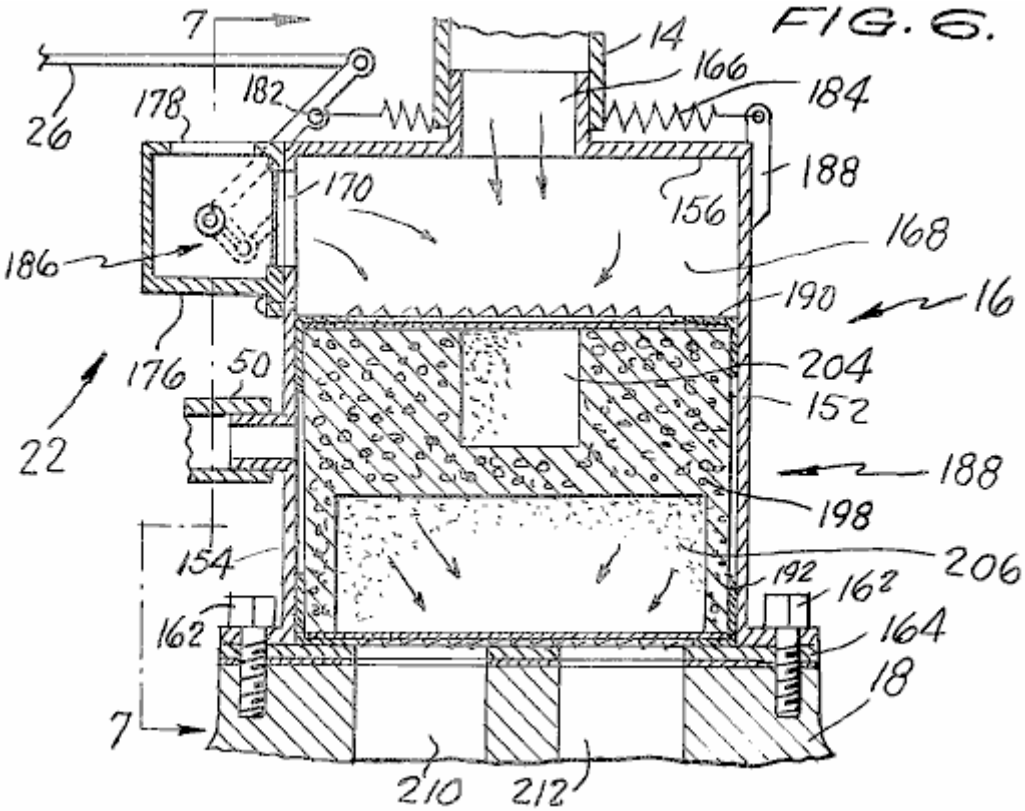

Fig.7 is a partial side, partial sectional view of the vapour equaliser illustrated in Fig.6 taken along line 7--7

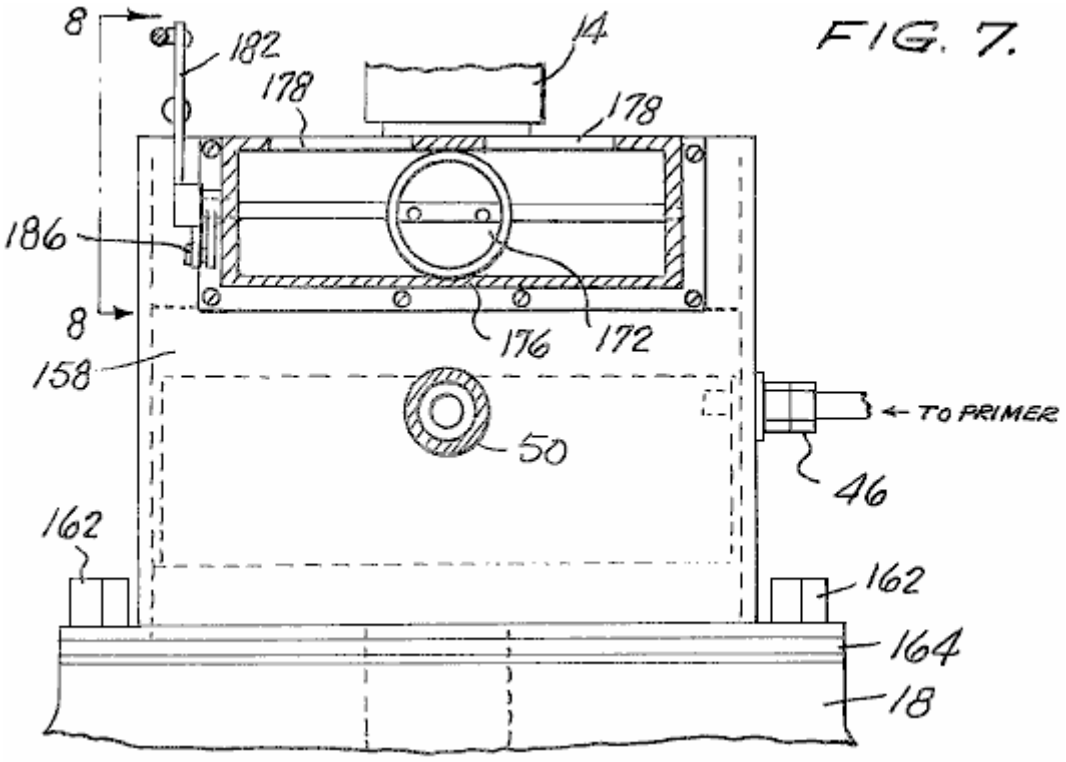

Fig.8 is a side view illustrating the throttle linkage of the vapour equaliser shown in Fig.7 taken along line 8--8

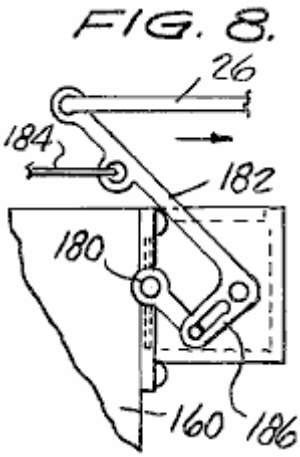

Fig.9 is a longitudinal sectional view of another filter component of the preferred embodiment illustrated in Fig.1

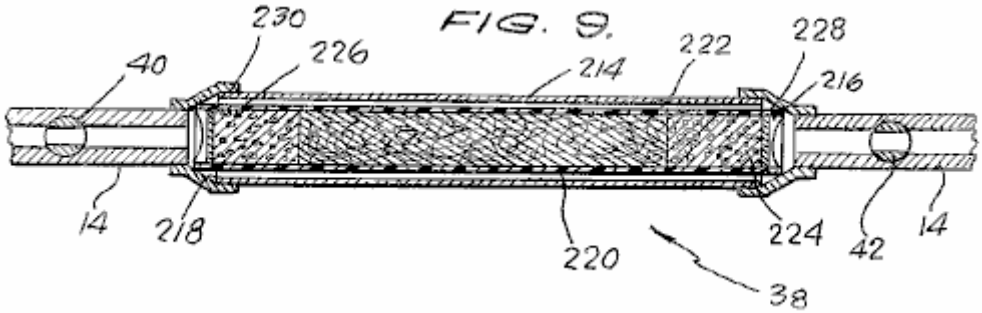

Fig.10 is a view of another component of the present invention

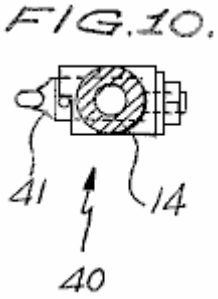

Fig.11 is an exploded, perspective view which illustrates the main components of the filter portion of the vapour equaliser of the present invention.

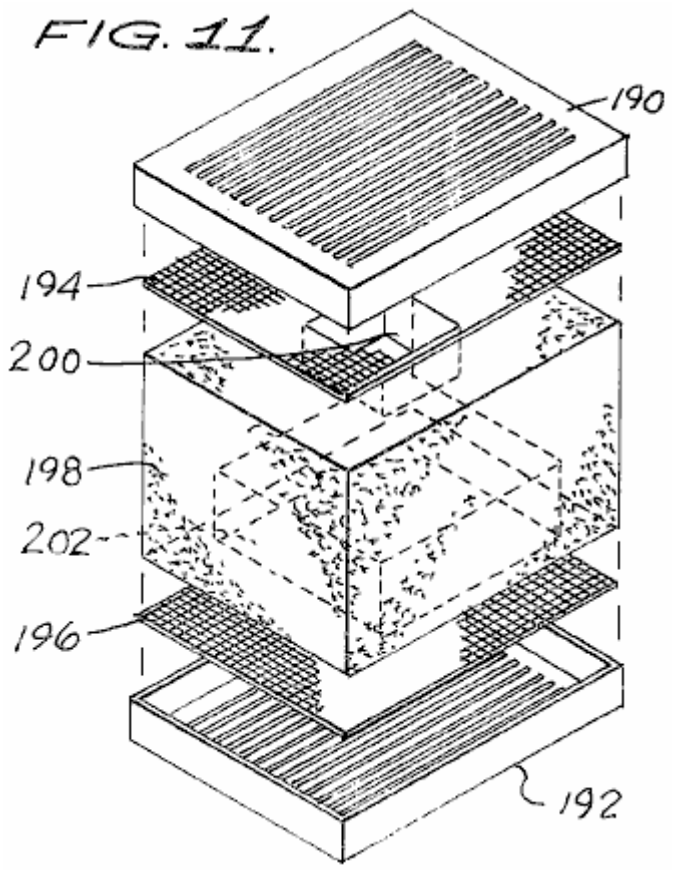

DETAILED DESCRIPTION OF THE PREFERRED EMBODIMENT

Referring now to the drawings, where parts are numbered the same in each drawing, and more particularly to **Fig.1** which illustrates a preferred embodiment of the present invention as installed in a motor vehicle.

The preferred embodiment includes as its main components a fuel vapour tank **10** in which the fuel vapour is stored and generated for subsequent delivery to the internal combustion engine **20**. On the top of fuel vapour tank **10** is mounted an air inlet control valve **12** whose structure and operation will be described in greater detail below.

The internal combustion engine **20** includes a standard intake manifold **18**. Mounted upon the intake manifold **18** is a vapour equaliser chamber **16**. Connected between the fuel vapour tank **10** and the vapour equaliser chamber **16** is a vapour conduit or hose **14** for conducting the vapours from within tank **10** to the chamber **16**.

Reference numeral **22** indicates generally an air inlet control valve which is mounted on the vapour equaliser chamber **16**. Thus, the system is provided with two separate air inlet control valves **12** and **22** which are respectively coupled via cables **24** and **26** to the throttle control for the motor vehicle which may take the form of a standard accelerator pedal **28**. The air inlet control valves **12** and **22** are synchronised in such a fashion that the opening of the air inlet control valve **22** of the vapour equaliser **16** always precedes and exceeds the opening of the air inlet control valve **12** of the fuel vapour tank **10**, for reasons which will become more clear later.

The cooling system of the vehicle conventionally includes a radiator **30** for storing liquid coolant which is circulated through the engine **20** in the well-known fashion. A pair of hoses **32** and **34** are preferably coupled into the normal heater lines from the engine **20** so as to direct heated liquid coolant from the engine **20** to a warming coil **36**, preferably constructed of copper, which is positioned within vapour tank **10**. I have found that the water circulation system consisting of hoses **32**, **34** and **36** serves three distinct functions. Firstly, it prevents the vapour tank from reaching the cold temperatures to which it would otherwise be subjected as a result of high vacuum pressure and air flow through it. Secondly, the heated coolant serves to enhance vaporisation of the fuel stored within tank **10** by raising its temperature. Thirdly, the liquid coolant, after leaving tank **10** via conduit **34**, has been cooled to the point where engine **20** may then be run at substantially lower operating temperatures to further increase efficiency and prolong the life of the engine.

Included in series with vapour conduit **14** is a filter unit **38** which is designed to retard the flow of fuel vapour from the tank **10** to the vapour equaliser **16**. The precise structure of the filter unit **38** will be described in greater detail below. A thrust adjustment valve **40** is positioned upstream of the filter unit **38** in conduit **14** and acts as a fine adjustment for the idling speed of the vehicle. Positioned on the other side of filter unit **38** in conduit **14** is a safety shut-off valve **42** which comprises a one-way valve. Starting the engine **20** will open the valve **42** to permit the engine vacuum pressure to be transmitted to tank **10**, but, for example, a backfire will close the valve to prevent a possible explosion. The tank **10** may also be provided with a drain **44** positioned at the bottom of the tank.

Positioned on the side of the vapour equaliser chamber **16** is a primer connection **46** which may be controlled by a dash mounted primer control knob **48** connected to tank **10** via conduit **47**. A conduit **50** extends from the oil breather cap opening **52** in a valve cover **54** of the engine **20** to the vapour equaliser **16** to feed the oil blow-by to the engine as a means for eliminating valve clatter. This is believed necessary due to the extreme lean mixture of fuel vapour and air fed to the combustion cylinders of the engine **20** in accordance with the present invention.

Referring now to **Fig.2** and **Fig.3**, the fuel vapour tank **10** of the present invention is illustrated in greater detail in orthogonal sectional views and is seen to include a pair of side walls **56** and **58** which are preferably comprised of heavy duty steel plate (e.g. 1/2" thick) in order to withstand the high vacuum pressures developed inside it. Tank **10** further comprises top wall **60** and bottom wall **62**, and front and rear walls **64** and **66**, respectively.

In the front wall **64** of tank **10** is positioned a coupling **68** for mating the heater hose **32** with the internal copper conduit **36**. Tank **10** is also provided with a pair of vertically oriented planar support plates **70** and **72** which are positioned somewhat inside the side walls **56** and **58** and are substantially parallel to them. Support plates **70** and **72** lend structural integrity to the tank **10** and are also provided with a plurality of openings **74** (**Fig.2**) at the bottom of them to permit fluid communication through it. The bottom of tank **10** is generally filled with from one to five gallons of fuel, and the walls of tank **10** along with plates **70** and **72** define three tank chambers **76**, **78** and **80** which are, by virtue of openings **74**, in fluid communication with one another.

In the top wall **60** of tank **10** is formed an opening **82** for placing one end of vapour conduit **14** in fluid communication with the interior chamber **76** of tank **10**. A second opening **84** is positioned in the top wall **60** of tank **10** over which the air inlet control valve **12** is positioned. The valve assembly **12** comprises a pair of conventional butterfly valves **86** and **88** which are coupled via a control rod **90** to a control arm **92**. Control arm **92** is, in turn, pivoted under the control of a cable **24** and is movable between a solid line position indicated in **Fig.2** by reference numeral **92** and a dotted line position indicated in **Fig.2** by reference numeral **92'**.

Rod **90** and valves **86** and **88** are journaled in a housing **94** having a base plate **96** which is mounted on a cover **98**. As seen in **Fig.1**, the base plate **96** includes several small air intake ports or apertures **100** formed on both sides of the butterfly valves **86** and **88**, which are utilised for a purpose to become more clear later on.

Rod **90** is also journaled in a flange **102** which is mounted to cover **98**, while a return spring **104** for control arm **92** is journaled to cover **98** via flange **106**.

Extending through the baffle and support plates 70 and **72** from the side chambers **78** and **80** of tank **10** to be in fluid communication with apertures **100** are a pair of air conduits **108** and **110** each having a reed valve **112** and **114** positioned at the ends, for controlling air and vapour flow through it. The reed valves **112** and **114** co-operage with the small apertures **100** formed in the base plate **96** to provide the proper amount of air into the tank **10** while the engine is idling and the butterfly valves **86** and **88** are closed.

Mounted to the front wall **64** of tank **10** is a pivot support member **132** for pivotally receiving a filter element which is indicated generally by reference numeral **134** and is illustrated in a perspective, partially cut away view in **Fig.5**. The unique, pivotable filter element **134** comprises a frame member **136** having a pin-receiving stub **138** extending along one side member of it. The actual filter material contained within the frame **136** comprises a layer of carbon particles **148** which is sandwiched between a pair of layers of sponge-like filter material which

may, for example, be made of neoprene. The neoprene layers **144** and **146** and carbon particles **148** are maintained in place by top and bottom screens **140** and **142** which extend within, and are secured by, frame member **136**. ,A thick-walled rubber hose **150** having a central annulus **151** is secured to the top of screen **140** so as to mate with opening **82** of top wall **60** (see **Fig.2**) when the filter assembly **134** is in its solid line operative position illustrated in **Fig.2**. In the latter position, it may be appreciated that the vapour conduit **14** draws vapour fumes directly from the filter element **134**, rather than from the interior portion **76** of tank **10**. In contradistinction, when the filter element **134** is in its alternate operative position, indicated by dotted lines in **Fig.2**, the vapour conduit **14** draws fumes mainly from the interior portions **76**, **78** and **80** of tank **10**.

Fig.4 is an enlarged view of one of the reed valve assemblies **114** which illustrates the manner in which the valve opens and closes in response to the particular vacuum pressure created within the tank **10**. Valves **112** and **114** are designed to admit just enough air to the tank **10** from the apertures **100** at engine idle to prevent the engine from stalling.

Referring now to **Fig.6**, **Fig.7** and **Fig.8**, the vapour equaliser chamber **16** of the present invention is seen to include front and rear walls **152** and **154**, respectively, a top wall **156**, a side wall **158**, and another side wall **160**. The vapour equaliser chamber **16** is secured to the manifold **18** as by a plurality of bolts **162** under which may be positioned a conventional gasket **164**.

In the top wall **156** of the vapour equaliser **16** is formed an opening **166** for communicating the outlet end of vapour conduit **14** with a mixing and equalising chamber **168**. Adjacent to the mixing and equalising chamber **168** in wall **154** is formed another opening **170** which communicates with the outside air via opening **178** formed in the upper portion of housing **176**. The amount of air admitted through openings **178** and **170** is controlled by a conventional butterfly valve **172**. Butterfly valve **172** is rotated by a control rod **180** which, in turn, is coupled to a control arm **182**. Cable **26** is connected to the end of control arm **182** furthest from the centreline and acts against the return bias of spring **184**, the latter of which is journaled to side plate **152** of vapour equaliser **16** via an upstanding flange **188**. Reference numeral **186** indicates generally a butterfly valve operating linkage, as illustrated more clearly in **Fig.8**, and which is of conventional design as may be appreciated by a person skilled in the art.

Positioned below mixing and equalising chamber **168** is a filter unit which is indicated generally by reference numeral **188**. The filter unit **188**, which is illustrated in an exploded view in **Fig.11**, comprises a top plastic fluted cover **190** and a bottom plastic fluted cover **192**. Positioned adjacent to the top and bottom covers **190** and **192** is a pair of screen mesh elements **194** and **196**, respectively. Positioned between the screen mesh elements **194** and **196** is a support member **198** which is preferably formed of a sponge-like filter material, such as, for example, neoprene. The support member **199** has formed on its upper and lower surfaces, a pair of receptacles **200** and **202**, whose diameters are sized similarly to the opening **166** in top plate **156** and the openings formed in the intake manifold **18** which are respectively indicated by reference numerals **210** and **212** in **Fig.6**.

Positioned in receptacles **200** and **202** are carbon particles **204** and **206**, respectively, for vapour retardation and control purposes.

Referring now to **Fig.9**, the filter unit **38** mounted in vapour conduit **14** is illustrated in a longitudinal sectional view and is seen to comprise an outer flexible cylindrical hose **214** which is adapted to connect with hose **14** at both ends by a pair of adapter elements **216** and **218**. Contained within the outer flexible hose **214** is a cylindrical container **220**, preferably of plastic, which houses, in its centre, a mixture of carbon and neoprene filter fibres **222**. At both ends of the mixture **222** are deposited carbon particles **224** and **226**, while the entire filtering unit is held within the container **220** by end screens **228** and **230** which permit passage of vapours through it while holding the carbon particles **224** and **226** in place.

Fig.10 illustrates one form of the thrust adjustment valve **40** which is placed within line **14**. This valve simply controls the amount of fluid which can pass through conduit **14** via a rotating valve member **41**.

In operation, the thrust adjustment valve **40** is initially adjusted to achieve as smooth an idle as possible for the particular motor vehicle in which the system is installed. The emergency shut-off valve **42**, which is closed when the engine is off, generally traps enough vapour between it and the vapour equaliser **16** to start the engine **20**. Initially, the rear intake valves **12** on the tank **10** are fully closed, while the air intake valves **22** on the equaliser **16** are open to admit a charge of air to the vapour equaliser prior to the vapour from the tank, thus forcing the pre-existing vapour in the vapour equaliser into the manifold. The small apertures **100** formed in base plate **96** on tank **10** admit just enough air to actuate the reed valves to permit sufficient vapour and air to be drawn through vapour conduit **14** and equaliser **16** to the engine **20** to provide smooth idling. The front air valves **22** are always set ahead of the rear air valves **12** and the linkages **24** and **26** are coupled to throttle pedal **28** such that the degree of opening of front valves **22** always exceeds the degree of opening of the rear valves **12**.

Upon initial starting of the engine **20**, due to the closed condition of rear valves **12**, a high vacuum pressure is created within tank **10** which causes the filter assembly **134** positioned in tank **10** to rise to its operative position indicated by solid outline in **Fig.2**. In this manner, a relatively small amount of vapour will be drawn directly from filter **134** through vapour conduit **14** to the engine to permit the latter to run on an extremely lean mixture.

Upon initial acceleration, the front air intake valve **22** will open further, while the rear butterfly assembly **12** will begin to open. The latter action will reduce the vacuum pressure within tank **10** whereby the filter assembly **134** will be lowered to its alternate operating position illustrated in dotted outline in **Fig.2**. In this position, the lower end of the filter assembly **134** may actually rest in the liquid fuel contained within the tank **10**. Accordingly, upon acceleration, the filter assembly **134** is moved out of direct fluid communication with the opening **82** such that the vapour conduit **14** then draws fuel vapour and air from the entire tank **10** to provide a richer combustion mixture to the engine, which is necessary during acceleration.

When the motor vehicle attains a steady speed, and the operator eases off the accelerator pedal **28**, the rear butterfly valve assembly **12** closes, but the front air intake **22** remains open to a certain degree. The closing of the rear air intake **12** increases the vacuum pressure within tank **10** to the point where the filter assembly **134** is drawn up to its initial operating position. As illustrated, in this position, the opening **82** is in substantial alignment with the aperture **151** of hose **150** to place the filter unit **134** in direct fluid communication with the vapour conduit **14**, thereby lessening the amount of vapour and air mixture fed to the engine. Any vapour fed through conduit **14** while the filter **134** is at this position is believed to be drawn directly off the filter unit itself.

I have been able to obtain extremely high mpg figures with the system of the present invention installed on a V-8 engine of a conventional 1971 American-made car. In fact, mileage rates in excess of one hundred miles per US gallon have been achieved with the present invention. The present invention eliminates the need for conventional fuel pumps, carburettors, and fuel tanks, thereby more than offsetting whatever the components of the present invention might otherwise add to the cost of a car. The system may be constructed with readily available components and technology, and may be supplied in kit form as well as original equipment.

Obviously, numerous modifications and variations of the present invention are possible in light of the above teachings. For example, although described in connection with the operation of a motor vehicle, the present invention may be universally applied to any four-stroke engine for which its operation depends upon the internal combustion of fossil fuels. Therefore, it is to be understood that within the scope of the appended claims the invention may be practiced otherwise than as specifically described here.

CLAIMS

1. A fuel vapour system for an internal combustion engine having an intake manifold, which comprises:
(a) A tank for containing fuel vapour;
(b) A vapour equaliser mounted on and in fluid communication with the intake manifold of the engine;
(c) A vapour conduit connecting the tank to the vapour equaliser for delivering fuel vapour from the former to the latter;
(d) A vapour equaliser having a valve connected to it for controlling the admission of air to the vapour equaliser;
(e) A tank having a second valve connected to it for controlling the admission of air to the tank;
(f) A throttle for controlling the first and second valves so that the opening of the first valve precedes and exceeds the opening of the second valve.

2. The fuel vapour system as set forth in claim 1, further comprising a filter positioned in the vapour conduit for retarding the flow of fuel vapour from the tank to the vapour equaliser.

3. The fuel vapour system as set forth in claim 2, where the filter comprises carbon particles.

4. The fuel vapour system as set forth in claim 2, where the filter comprises carbon particles and neoprene fibres.

5. The fuel vapour system as set forth in claim 2, where the filter comprises a substantially tubular housing positioned in series in the vapour conduit, the housing containing a central portion comprising a mixture of carbon and neoprene and end portions comprising carbon positioned on each side of the central portion.

6. The fuel vapour system as set forth in claim 1, further comprising a filter positioned in the vapour equaliser, for retarding the flow of the fuel vapour to the engine intake manifold.

7. The fuel vapour system as set forth in claim 6, where the filter is positioned downstream of the first valve.

8. The fuel vapour system as set forth in claim 7, where the filter comprises carbon particles.

9. The fuel vapour system as set forth in claim 8, where the filter further comprises a porous support member having first and second recessed portions for containing the carbon particles, the first recessed portion being positioned opposite a vapour inlet port in the vapour equaliser to which the vapour conduit is connected, the second recessed portion being positioned opposite the intake manifold of the engine.

10. The fuel vapour system as set forth in claim 9, where the porous support member is comprised of neoprene.

11. The fuel vapour system as set forth in claim 1, with a further filter positioned in the tank for controlling the flow of fuel vapour into the vapour conduit in proportion to the degree of vacuum in the tank.

12. The fuel vapour system as set forth in claim 11, where the filter incorporates a method for reducing the amount of fuel vapour delivered to the vapour conduit when the engine is idling and when the engine has attained a steady speed.

13. The fuel vapour system as set forth in claim 12, where the throttle acts to close the second valve when the engine is idling and when the engine has attained a steady speed to thereby increase the vacuum pressure in the tank.

14. The fuel vapour system as set forth in claim 13, where the filter comprises a frame pivotally mounted within the tank and movable between first and second operating positions, the first operating position corresponding to an open condition of the second valve, said second operating position corresponding to a closed condition of the second valve.

15. The fuel vapour system as set forth in claim 14, where the tank includes a vapour outlet port to which one end of the vapour conduit is connected, and where the second operating position of the frame places the filter in direct fluid communication with the vapour outlet port.

16. The fuel vapour system as set forth in claim 15, where the filter includes carbon particles.

17. The fuel vapour system as set forth in claim 16, where the filter includes neoprene filter material.

18. The fuel vapour system as set forth in claim 17, where the filter comprises a layer of carbon particles sandwiched between two layers of neoprene filter material, and a screen for supporting them within the pivotable frame.

19. The fuel vapour system as set forth in claim 18, further comprising a mechanism positioned on the filter for placing the filter in direct fluid communication with the vapour outlet port when the frame is in the second operating position.

20. A fuel vapour system for an internal combustion engine having an intake manifold, which comprises:
(a) A tank for containing fuel vapour;
(b) A vapour equaliser mounted on, and in fluid communication with, the intake manifold of the engine;
(c) A vapour conduit connecting the tank to the vapour equaliser for delivering fuel vapour from the former to the latter;
(d) A vapour equaliser having a first valve connected to it for controlling the admission of air to the vapour equaliser;
(e) A tank having a second valve connected to it for controlling the admission of air to the tank;
(f) A filter positioned in the vapour conduit for retarding the flow of the fuel vapour from the tank to the vapour equaliser means.

21. The fuel vapour system as set forth in claim 20, where the filter comprises a substantially tubular housing positioned in series in the vapour conduit, the housing containing a central portion comprising a mixture of carbon and neoprene and end portions comprising carbon positioned on each side of the central portion.

22. A fuel vapour system for an internal combustion engine having an intake manifold, which comprises:
(a) A tank for containing fuel vapour;
(b) A vapour equaliser mounted on and in fluid communication with the intake manifold of the engine;
(c) A vapour conduit connecting the tank to the vapour equaliser for delivering fuel vapour from the former to the latter;
(d) The vapour equaliser having a first valve connected to it for controlling the admission of air to the vapour equaliser;
(e) The tank having a second valve connected to it for controlling the admission of air to the tank;

(f) A filter positioned in the vapour equaliser for retarding the flow of the fuel vapour to the engine intake manifold.

23. The fuel vapour system as set forth in claim 22, where the filter is positioned downstream of the first valve, the filter comprises carbon particles and a porous support member having first and second recessed portions for containing the carbon particles, the first recessed portion being positioned opposite a vapour inlet port in the vapour equaliser to which the vapour conduit is connected, the second recessed portion being positioned opposite the intake manifold of the engine, and where the porous support member is comprised of neoprene.

The Permanent Magnet Motor of Stephen Kundel

US Patent 7,151,332 19th December 2006 Inventor: Stephen Kundel

MOTOR HAVING RECIPROCATING AND ROTATING PERMANENT MAGNETS

This patent describes a motor powered mainly by permanent magnets. This system uses a rocking frame to position the moving magnets so that they provide a continuous turning force on the output shaft.

ABSTRACT

A motor which has a rotor supported for rotation about an axis, and at least one pair of rotor magnets spaced angularity about the axis and supported on the rotor, at least one reciprocating magnet, and an actuator for moving the reciprocating magnet cyclically toward and away from the pair of rotor magnets, and consequently rotating the rotor magnets relative to the reciprocating magnet.

US Patent References:

0561144	June, 1896	Trudeau
1724446	August, 1929	Worthington
2790095	April, 1957	Peek et al.
3469130	September, 1969	Jines et al.
3703653	November, 1972	Tracy
3811058	May, 1974	Kiniski
3879622	April, 1975	Ecklin
3890548	June, 1975	Gray
3899703	August, 1975	Kinnison
3967146	June, 1976	Howard
3992132	November, 1976	Putt
4011477	March, 1977	Scholin
4151431	April, 1979	Johnson
4179633	December, 1979	Kelly
4196365	April, 1980	Presley
4267647	May, 1981	Anderson et al.
4629921	December, 1986	Gavaletz
4751486	June, 1988	Minato
5402021	March, 1995	Johnson
5594289	January, 1997	Minato
5634390	June, 1997	Takeuchi et al.
5751083	May, 1998	Tamura et al.
5925958	July, 1999	Pirc
6169343	January, 2001	Rich, Sr.
6343419	February, 2002	Litman et al.
6841909	January, 2005	Six
20020167236	November, 2002	Long
20040140722	July, 2004	Long

BACKGROUND OF THE INVENTION

This invention relates to the field of motors. More particularly, it pertains to a motor whose rotor is driven by the mutual attraction and repulsion of permanent magnets located on the rotor and an oscillator.

Various kinds of motors are used to drive a load. For example, hydraulic and pneumatic motors use the flow of pressurised liquid and gas, respectively, to drive a rotor connected to a load. Such motors must be continually supplied with pressurised fluid from a pump driven by energy converted to rotating power by a prime mover, such as an internal combustion engine. The several energy conversion processes, flow losses and pumping losses decrease the operating efficiency of motor systems of this type.

Conventional electric motors employ the force applied to a current carrying conductor placed in a magnetic field. In a d. c. motor the magnetic field is provided either by permanent magnets or by field coils wrapped around clearly defined field poles on a stator. The conductors on which the force is developed are located on a rotor and supplied with electric current. The force induced in the coil is used to apply rotor torque, whose magnitude varies

with the magnitude of the current and strength of the magnetic field. However, flux leakage, air gaps, temperature effects, and the counter-electromotive force reduce the efficiency of the motor.

Permanent dipole magnets have a magnetic north pole, a magnetic south pole, and magnetic fields surrounding each pole. Each magnetic pole attracts a pole of opposite magnetic polarity. Two magnetic poles of the same polarity repel each other. It is desired that a motor be developed such that its rotor is driven by the mutual attraction and repulsion of the poles of permanent magnets.

SUMMARY OF THE INVENTION

A motor according to the present invention includes a rotor supported for rotation about an axis, a first pair of rotor magnets including first and second rotor magnets spaced angularly about the axis and supported on the rotor, a reciprocating magnet, and an actuator for moving the reciprocating magnet cyclically toward and away from the first pair of rotor magnets, and cyclically rotating the first pair of rotor magnets relative to the reciprocating magnet. Preferably the motor includes a second pair of rotor magnets supported on the rotor, spaced axially from the first pair of rotor magnets, the second pair including a third rotor magnet and a fourth rotor magnet spaced angularly about the axis from the third rotor magnet. The reciprocating magnet is located axially between the first and second rotor magnet pairs, and the actuator cyclically moves the reciprocating magnet toward and away from the first and second pairs of rotor magnets.

The magnets are preferably permanent dipole magnets. The poles of the reciprocating magnet are arranged such that they face in opposite lateral directions.

The motor can be started by manually rotating the rotor about its axis. Rotation continues by using the actuator to move the reciprocating magnet toward the first rotor magnet pair and away from the second rotor magnet pair when rotor rotation brings the reference pole of the first rotor magnet closer to the opposite pole of the reciprocating magnet, and the opposite pole of the second rotor magnet closer to the reference pole of the reciprocating magnet. Then the actuator moves the reciprocating magnet toward the second rotor magnet pair and away from the first rotor magnet pair when rotor rotation brings the reference pole of the third rotor magnet closer to the opposite pole of the reciprocating magnet, and the opposite pole of the fourth rotor magnet closer to the reference pole of the reciprocating magnet.

A motor according to this invention requires no power source to energise a field coil because the magnetic fields of the rotor and oscillator are produced by permanent magnets. A nine-volt DC battery has been applied to an actuator switching mechanism to alternate the polarity of a solenoid at the rotor frequency. The solenoid is suspended over a permanent magnet of the actuator mechanism such that rotor rotation and the alternating polarity of a solenoid causes the actuator to oscillate the reciprocating magnet at a frequency and phase relation that is most efficient relative to the rotor rotation.

The motor is lightweight and portable, and requires only a commercially available portable d. c. battery to power an actuator for the oscillator. No motor drive electronics is required. Operation of the motor is practically silent.

Various objects and advantages of this invention will become apparent to those skilled in the art from the following detailed description of the preferred embodiment, when read in light of the accompanying drawings.

BRIEF DESCRIPTION OF THE DRAWINGS

These and other advantages of the present invention will become apparent to those skilled in the art from the following detailed description of a preferred embodiment when considered in the light of the accompanying drawings in which:

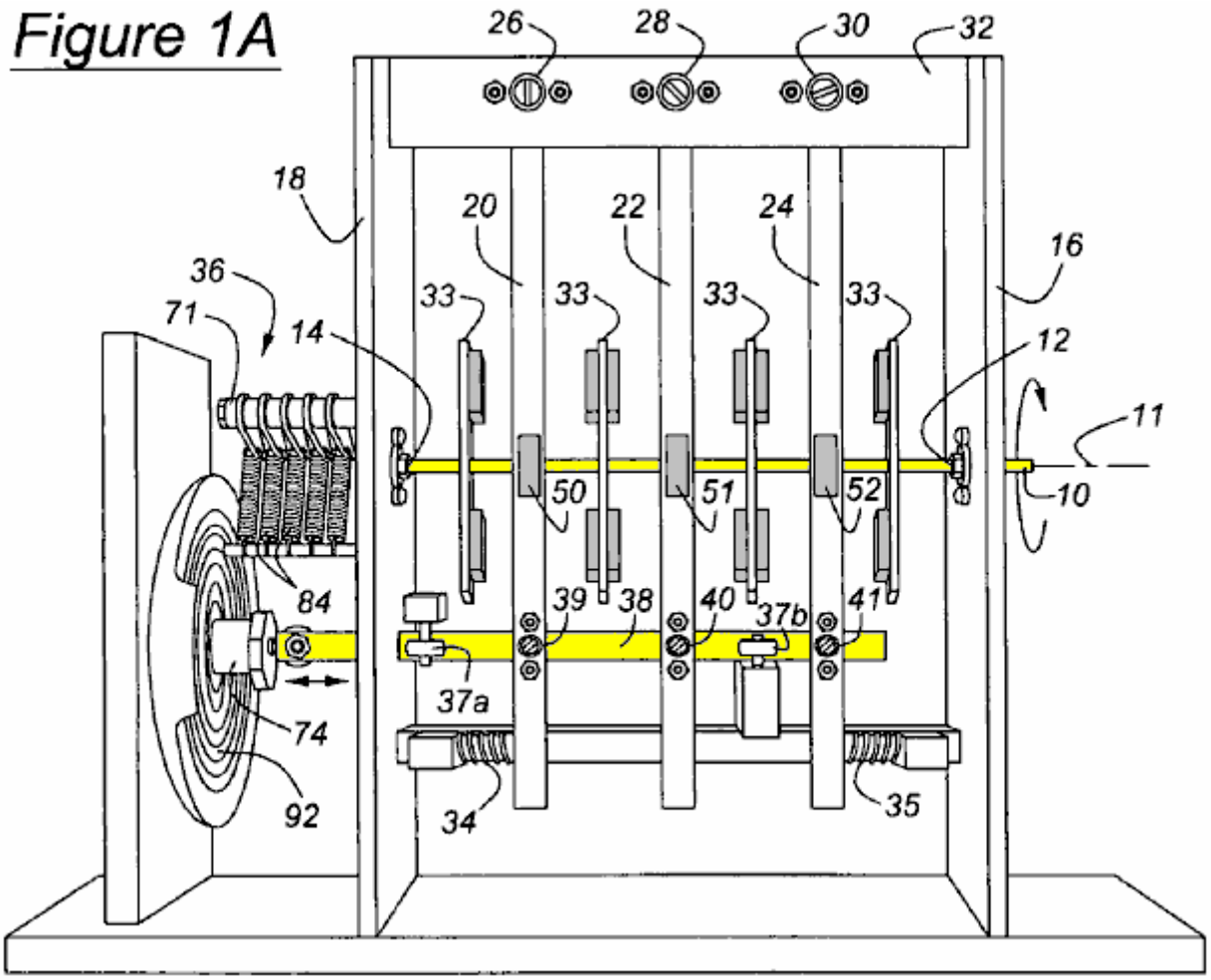

Fig.1A is a side view of a motor according to this invention;

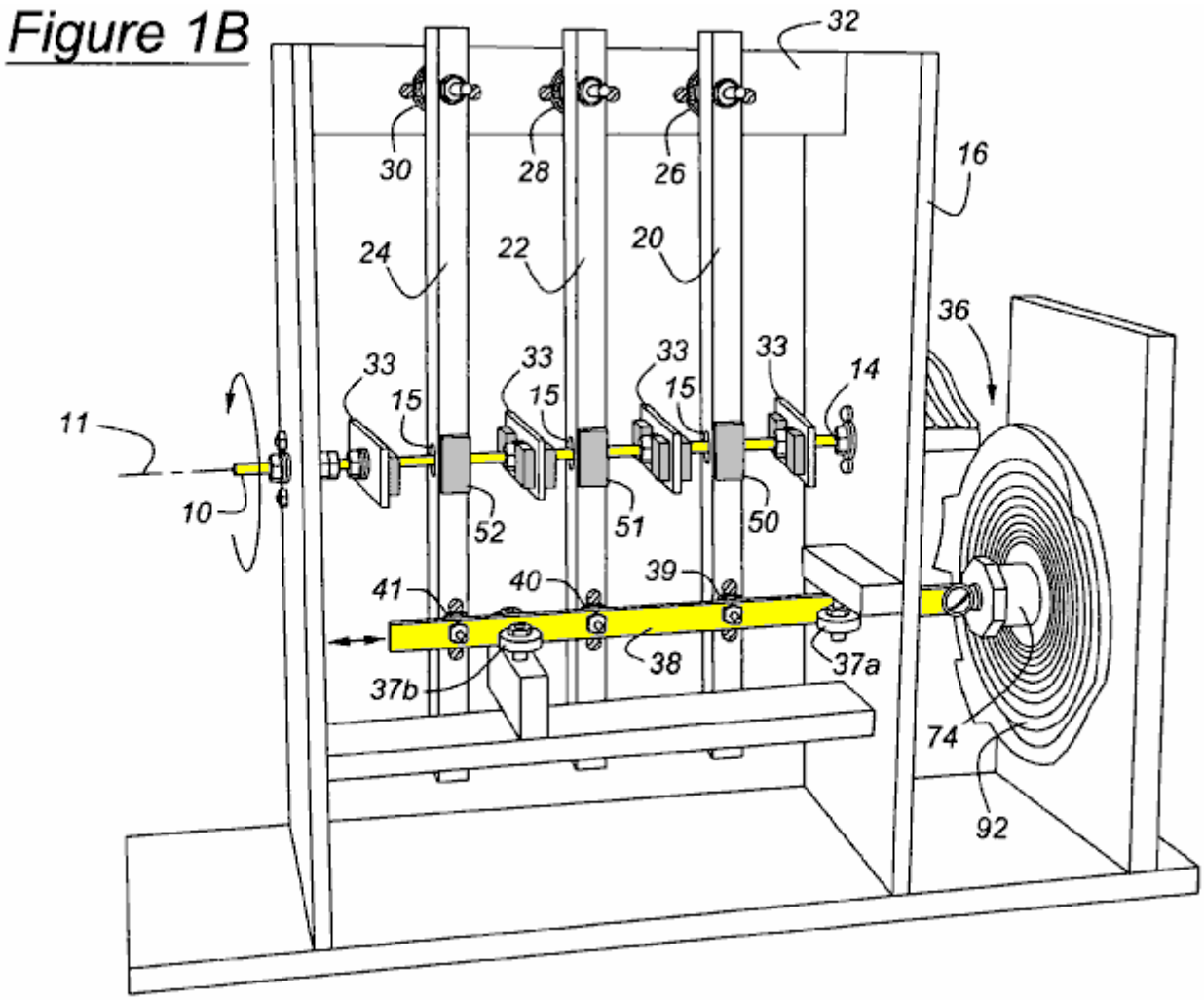

Fig.1B is a perspective view of the motor of **Fig.1A**

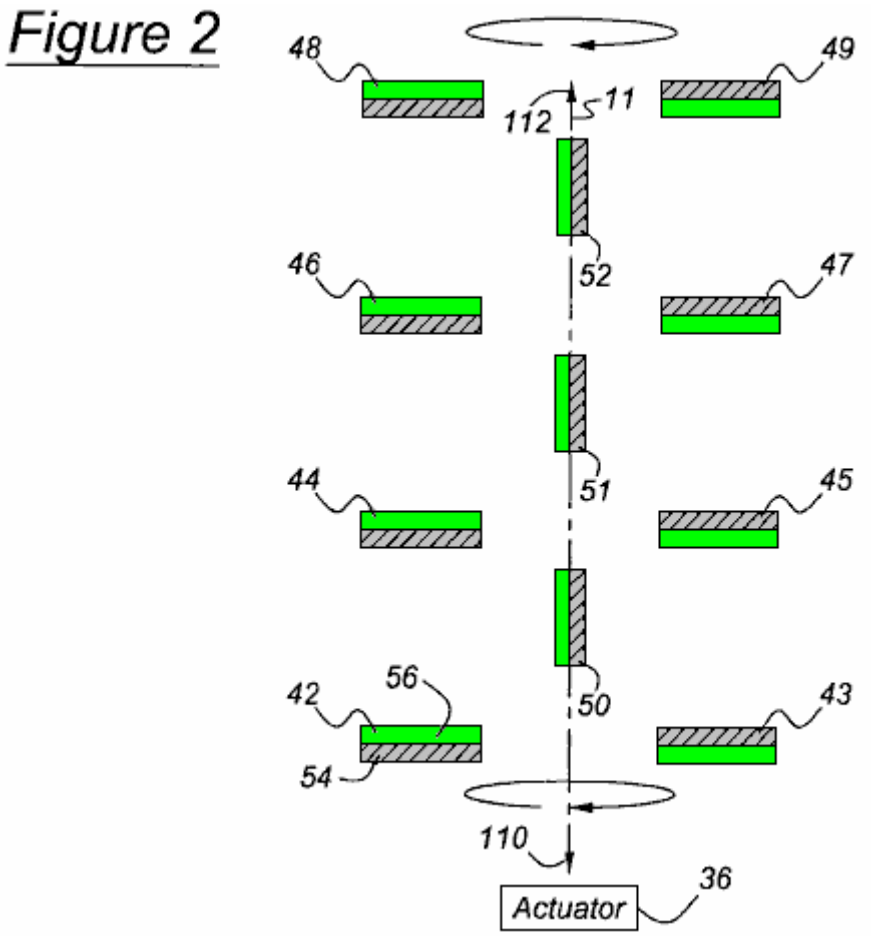

Fig.2 is a top view of the of motor of **Fig.1A** and **Fig.1B** showing the rotor magnets disposed horizontally and the reciprocating magnets located near one end of their range of travel

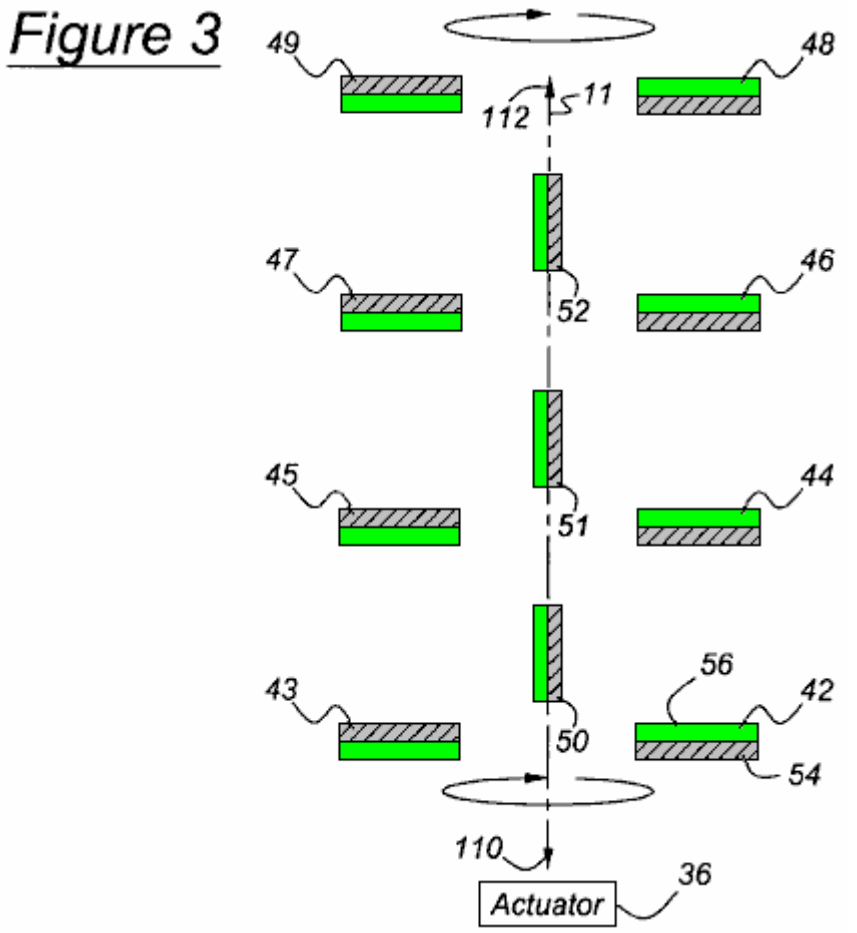

Fig.3 is a top view of the motor of **Fig.2** showing the rotor magnets rotated one-half revolution from the position shown in **Fig.2**, and the reciprocating magnets located near the opposite end of their range of travel

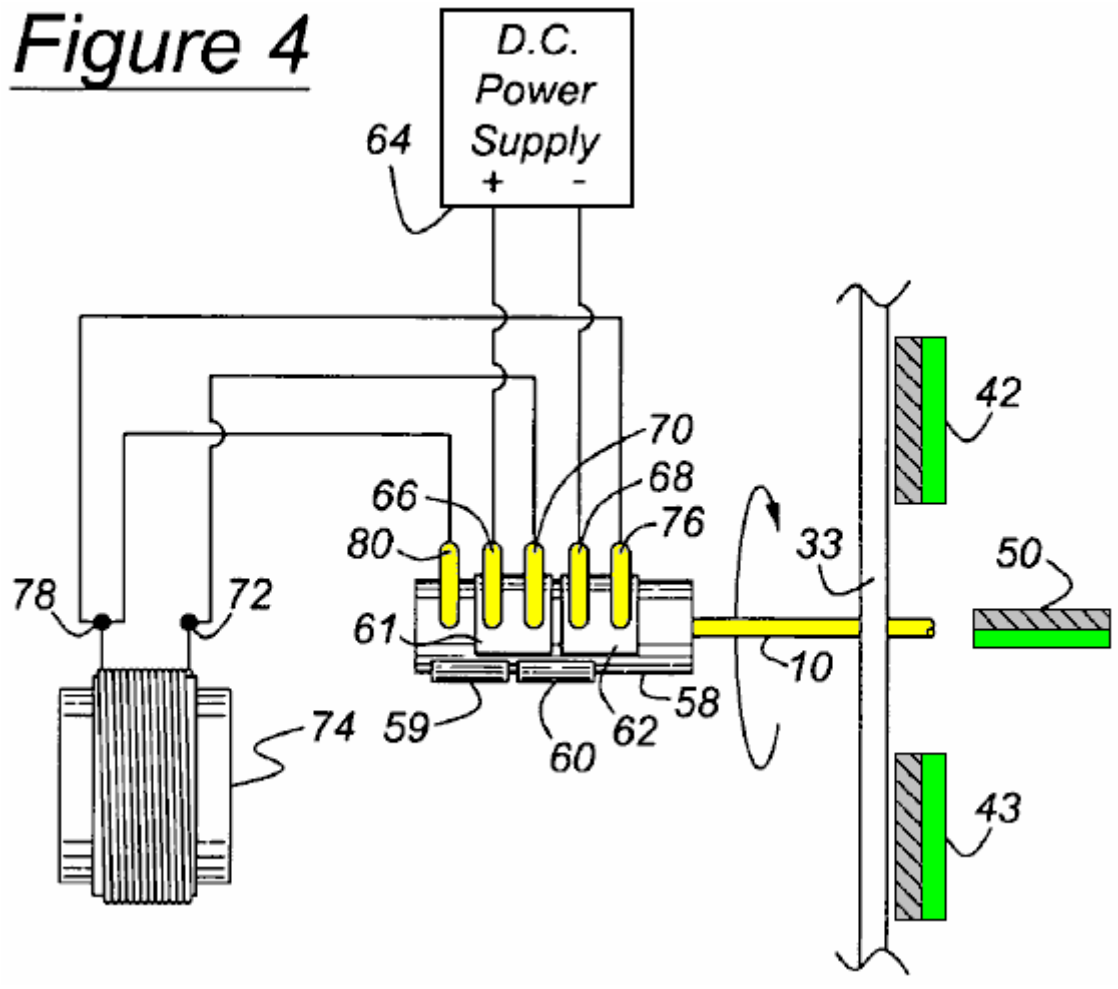

Fig.4 is a schematic diagram of a first state of the actuator switching assembly of the motor of **Fig.1**

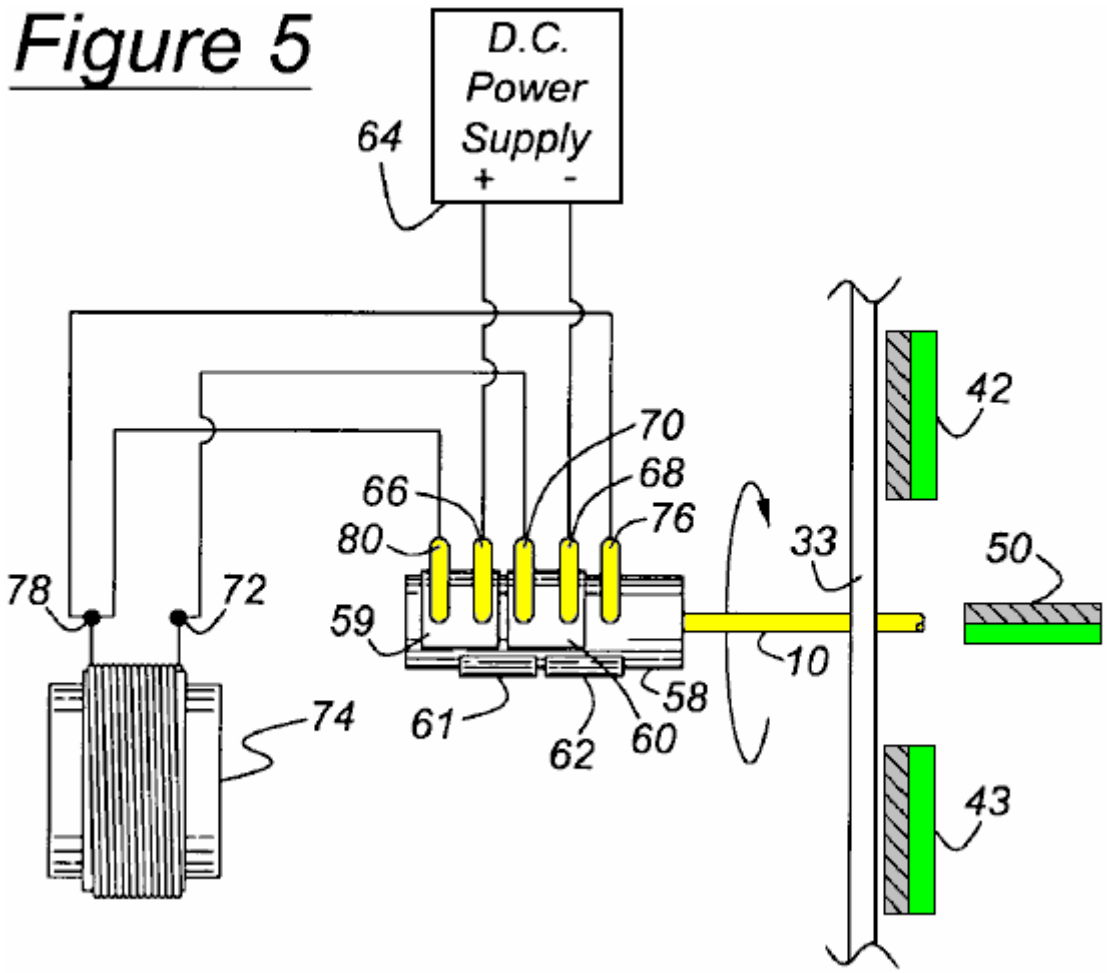

Fig.5 is a schematic diagram of a second state of the actuator switching assembly of the motor of **Fig.1**

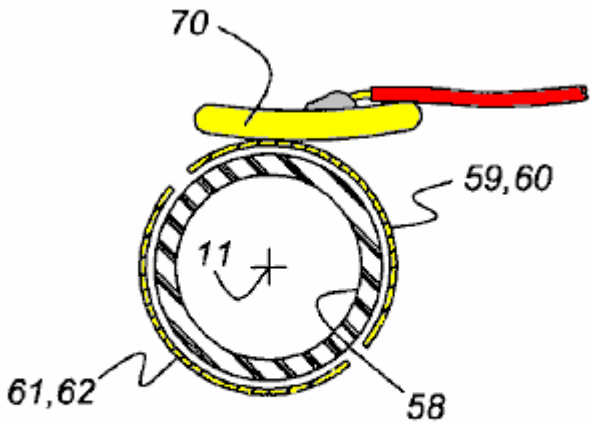

Figure 6

Fig.6 is cross sectional view of a sleeve shaft aligned with the rotor shaft showing a contact finger and bridge contact plates of the switching assembly

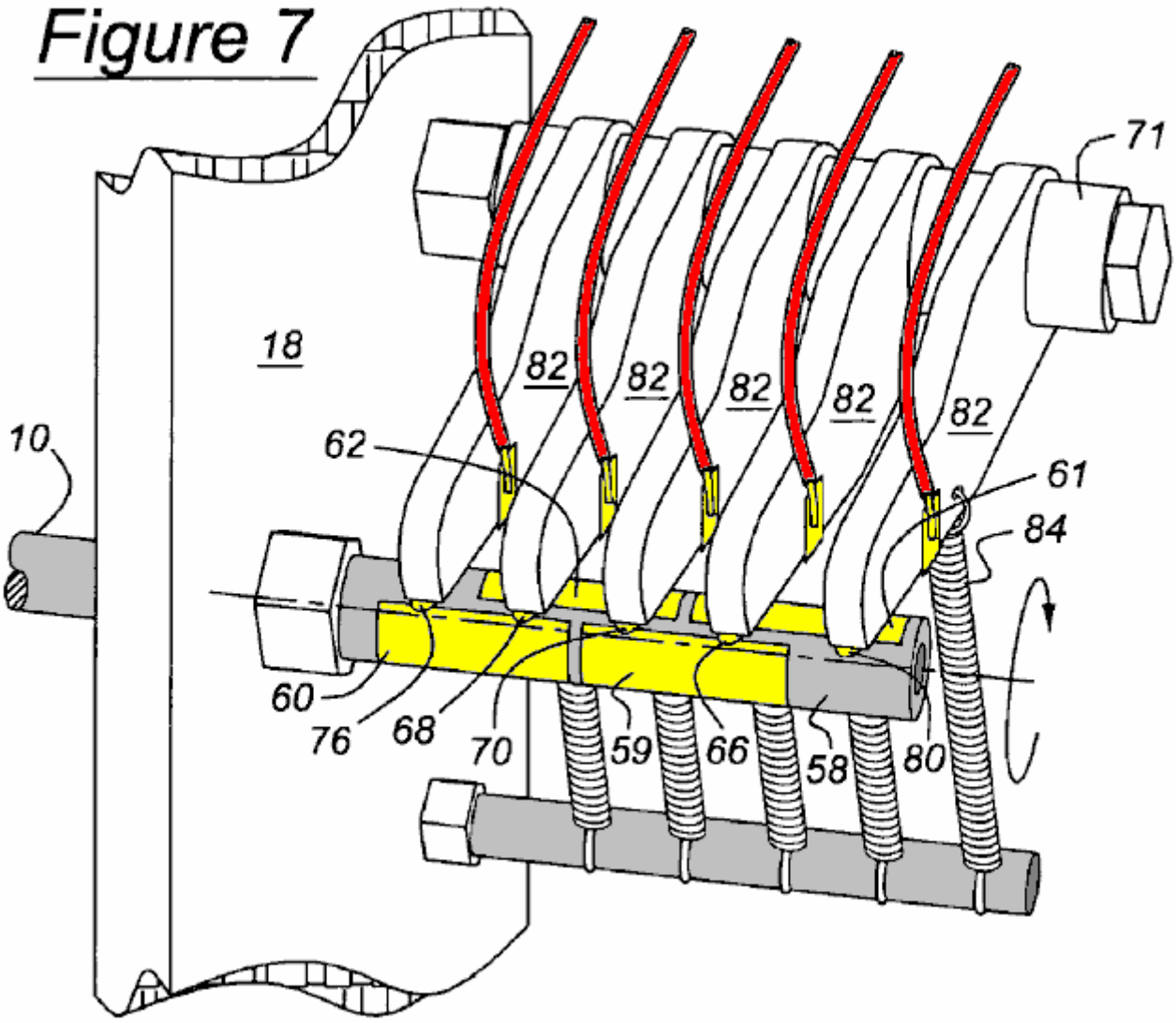

Fig.7 is an isometric view showing the switching contact fingers secured on pivoting arms and seated on the bridge connectors of the switching assembly

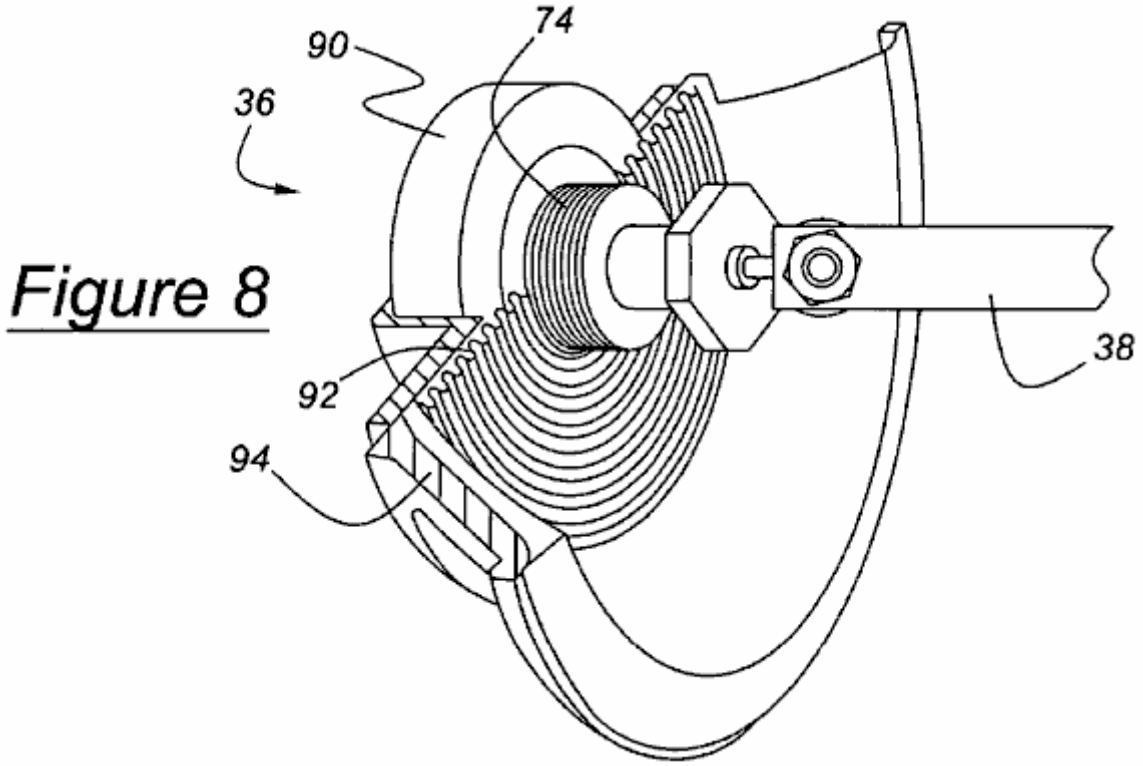

Fig.8 is isometric cross sectional view showing a driver that includes a solenoid and permanent magnet for oscillating the actuator arm in response to rotation of the rotor shaft

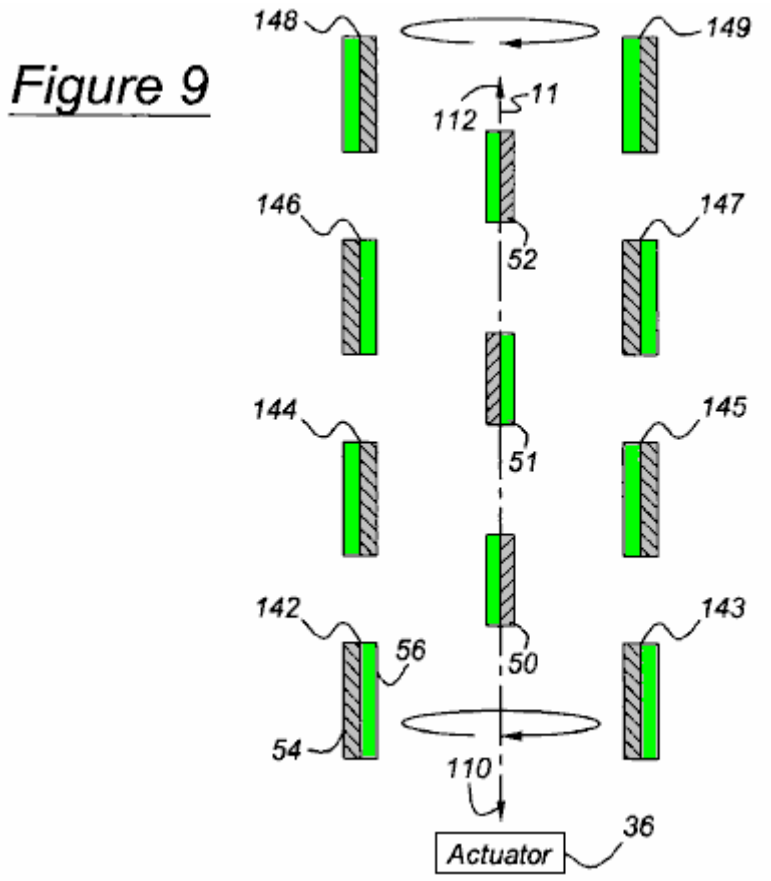

Fig.9 is a top view of an alternate arrangement of the rotor magnets, wherein they are disposed horizontally and rotated ninety degrees from the position shown in **Fig.2**, and the reciprocating magnets are located near an end of their range of displacement

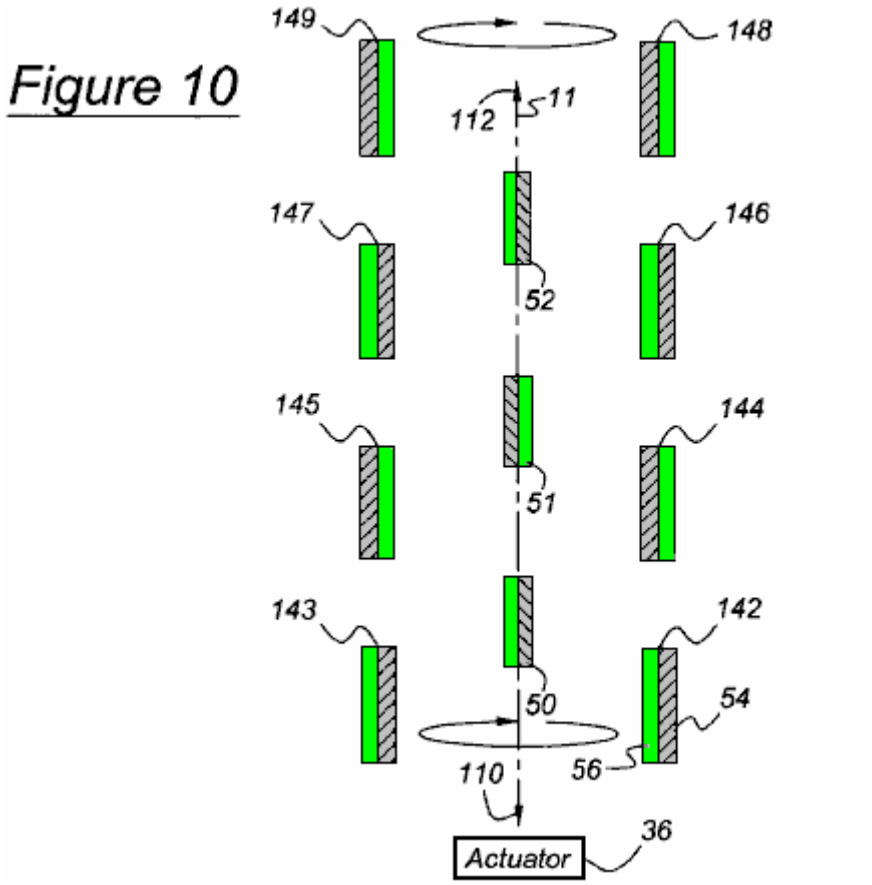

Fig.10 is a top view showing the rotor magnet arrangement of **Fig.9** rotated one-half revolution from the position shown in **Fig.9**, and the reciprocating magnets located near the opposite end of their range of displacement; and

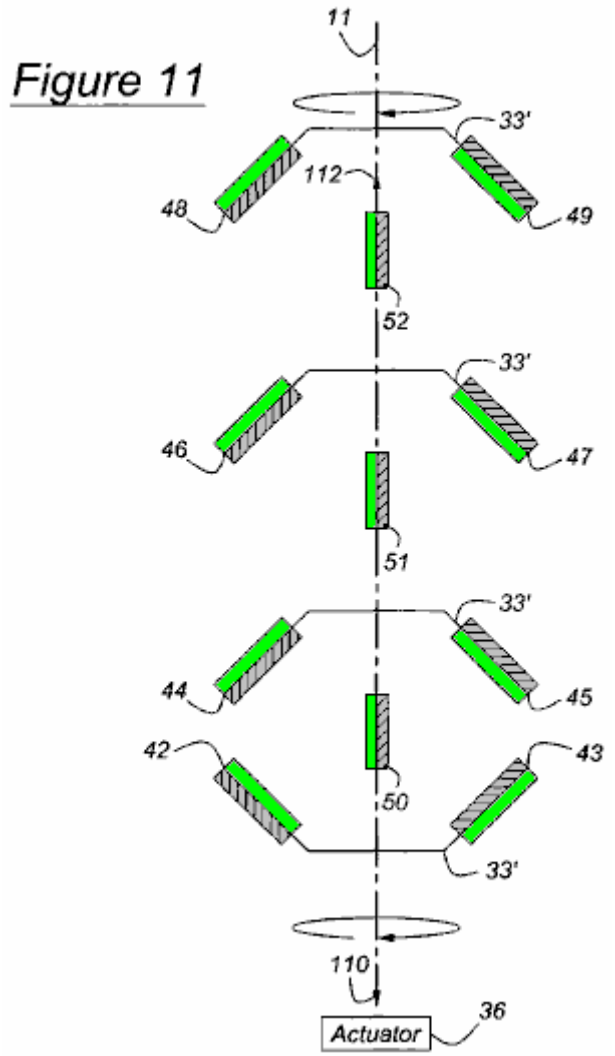

Fig.11 is a top view of the motor showing a third arrangement of the rotor magnets, which are canted with respect to the axis and the reciprocating magnets.

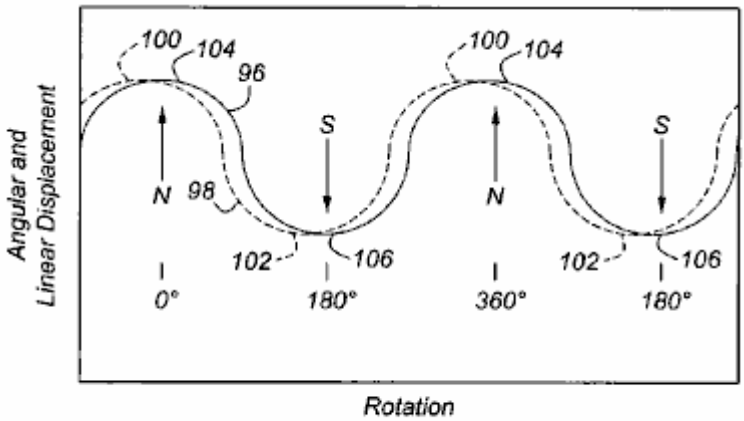

Figure 12

Fig.12 is a graph showing the angular displacement of the rotor shaft **10** and linear displacement of the reciprocating magnets

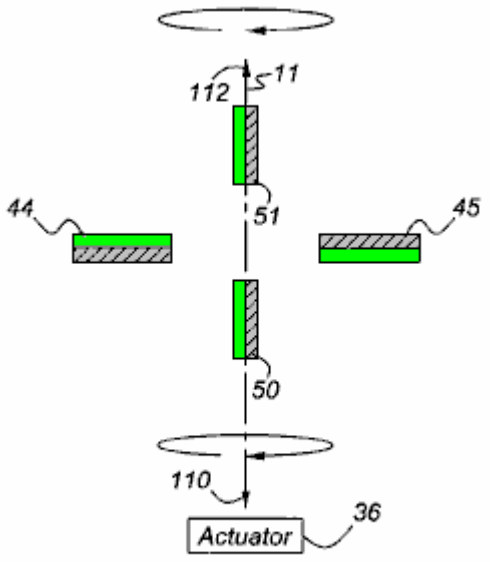

Figure 13

Fig.13 is a top view of a pair of rotor magnets disposed horizontally and reciprocating magnets located near one end of their range of travel

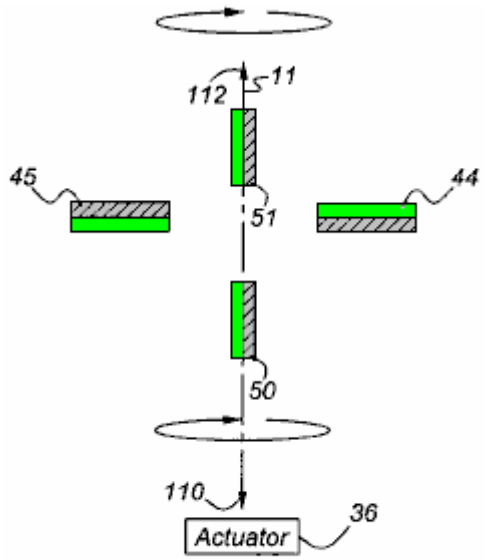

Figure 14

Fig.14 is a top view of the motor of **Fig.13** showing the rotor magnets rotated one-half revolution from the position shown in **Fig.13**, and the reciprocating magnets located near the opposite end of their range of travel; and

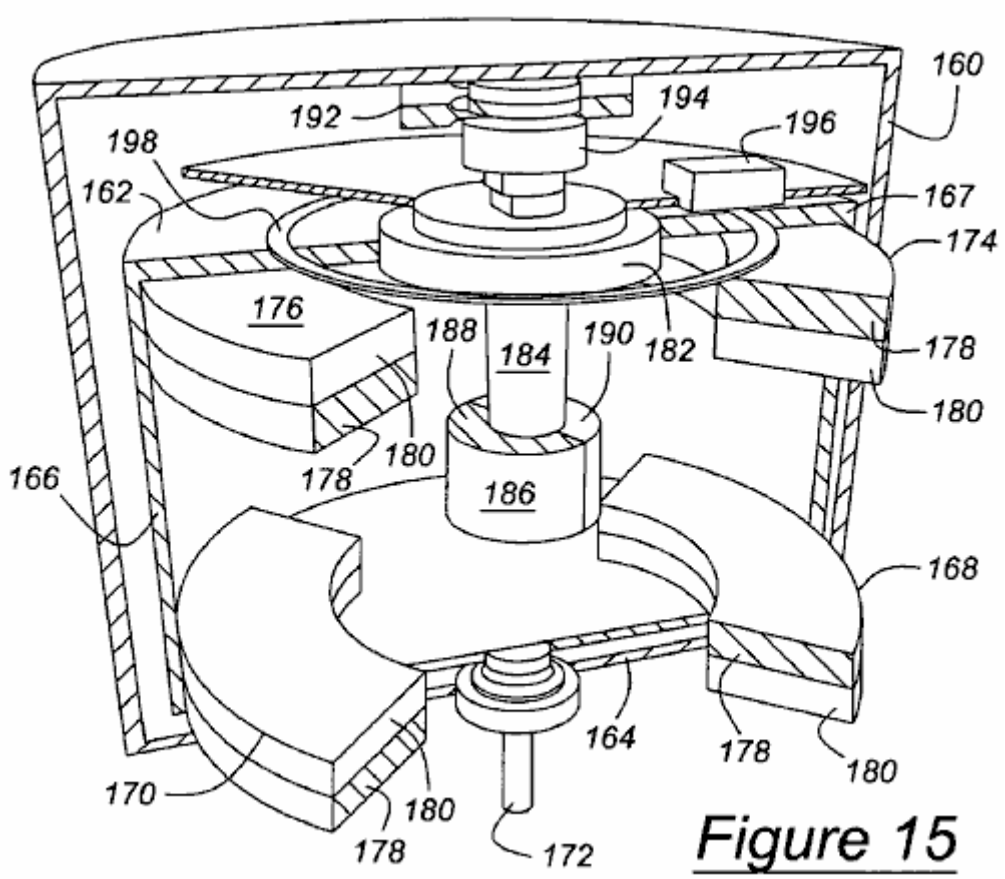

Fig.15 is a perspective cross sectional view of yet another embodiment of the motor according to this invention.

DETAILED DESCRIPTION OF THE PREFERRED EMBODIMENT

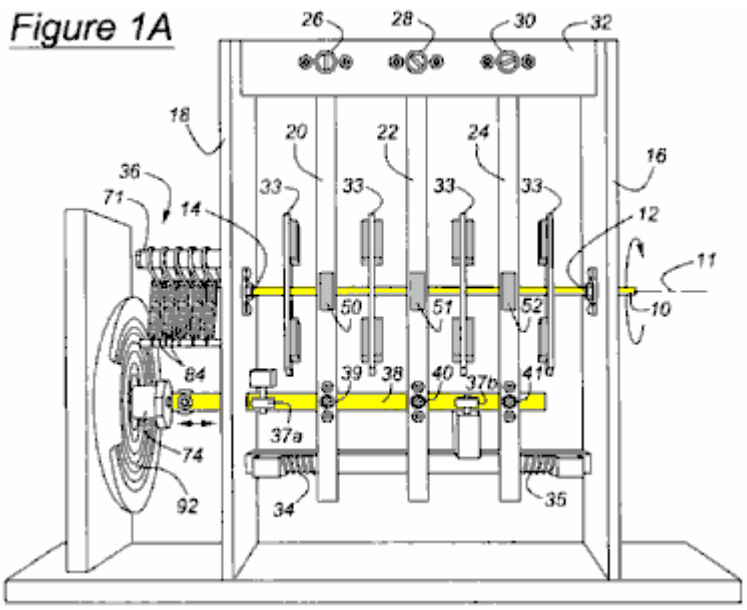

A motor according to this invention, illustrated in **Fig.1A** and **Fig.1B** includes a rotor shaft **10** supported for rotation about axis **11** on bearings **12** and **14** located on vertical supports **16** and **18** of a frame. An oscillator mechanism includes oscillator arms **20**, **22** and **24** pivotally supported on bearings **26** , **28** and **30** respectively, secured to a horizontal support **32**, which is secured at each axial end to the vertical supports **16** and **18**. The oscillator arms **20**, **22** and **24** are formed with through holes **15** aligned with the axis **11** of rotor shaft **10**, the holes permitting rotation of the rotor shaft and pivoting oscillation of arms without producing interference between the rotor and the arms.

Extending in opposite diametric directions from the rotor axis **11** and secured to the rotor shaft **10** are four plates **33** , axially spaced mutually along the rotor axis, each plate supporting permanent magnets secured to the plate and rotating with the rotor shaft.

Each pivoting oscillator arm **20**, **22** and **24** of the oscillator mechanism support permanent magnets located between the magnets of the rotor shaft. Helical coiled compression return springs **34** and **35** apply oppositely directed forces to oscillator arms **20** and **24** as they pivot about their respective pivotal supports **26** and **30**, respectively. From the point of view of **Fig.1A** and **Fig.1B**, when spring **34** is compressed by displacement of the oscillator arm, the spring applies a force to the right to oscillator arm **20** which tends to return it to its neutral, starting position. When spring **35** is compressed by displacement of arm **24**, the spring applies a force to the left to arm **24** tending to return it to its neutral, starting position.

The oscillator arms **20**, **22** and **24** oscillate about their supported bearings **26**, **28** and **30** , as they move in response to an actuator **36**, which includes an actuator arm **38**, secured through bearings at **39**, **40** and **41** to the oscillator arms **20**, **22** and **24**, respectively. Actuator **36** causes actuator arm **38** to reciprocate linearly leftwards and rightwards from the position shown in **Fig.1A** and **Fig.1B**. The bearings **39**, **40** and **41**, allow the oscillator arms **20**, **22** and **24** to pivot and the strut to translate without mutual interference. Pairs of guide wheels **37a** and **37b** spaced along actuator arm **38**, each include a wheel located on an opposite side of actuator arm **38** from another wheel of the wheel-pair, for guiding linear movement of the strut and maintaining the oscillator arms **20**, **22** and **24** substantially in a vertical plane as they oscillate. Alternatively, the oscillator arms **20**, **22** and **24** may be replaced by a mechanism that allows the magnets on the oscillator arms to reciprocate linearly with actuator arm **38** instead of pivoting above the rotor shaft **10** at **26**, **28** and **30**.

Figure 2

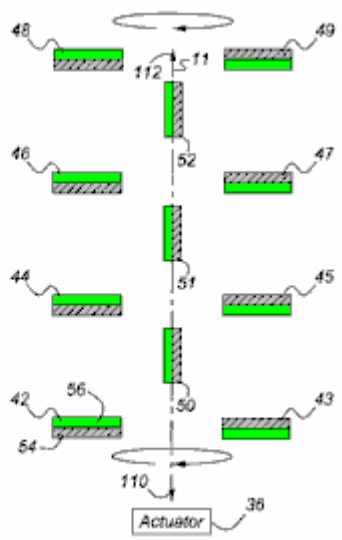

Fig.2 shows a first arrangement of the permanent rotor magnets **42 – 49** that rotate about axis **11** and are secured to the rotor shaft **10**, and the permanent reciprocating magnets **50 – 52** which move along axis **11** and are secured to the oscillating arms **20**, **22** and **24**. Each magnet has a pole of reference polarity and a pole of opposite polarity from that of the reference polarity. For example, rotor magnets **42**, **44**, **46** and **48**, located on one side of axis **11**, each have a north, positive or reference pole **54** facing actuator **36** and a south, negative or opposite pole **56** facing away from the actuator. Similarly, rotation magnets **43**, **45**, **47** and **49**, located diametrically opposite to rotor magnets **42**, **44**, **46** and **48**, each have a south pole facing toward actuator **36** and a north pole facing away from the actuator. The north poles **54** of the reciprocating magnets **50 – 52** face to the right from the point of view seen in **Fig.2** and **Fig.3** and their south poles **56** face towards the left.

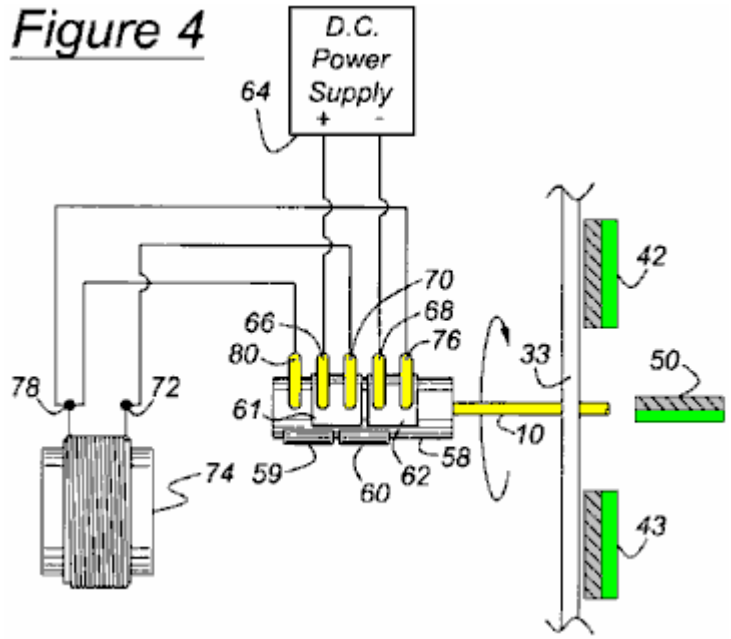

Fig.4 shows a switch assembly located in the region of the left-hand end of rotor shaft **10**. A cylinder, **58**, preferably formed of PVC, is secured to rotor shaft **10**. Cylinder **58** has contact plates **59** and **60**, preferably of brass, located on its outer surface, aligned angularly, and extending approximately 180 degrees about the axis **11**, as shown in **Fig.5**. Cylinder **58** has contact plates **61** and **62**, preferably made of brass, located on its outer surface, aligned angularly, extending approximately 180 degrees about the axis **11**, and offset axially with respect to contact plates **59** and **60**.

A D.C. power supply **64**, has its positive and negative terminals connected electrically through contact fingers **66** and **68**, to contact plates **61** and **62**, respectively. A third contact finger **70**, shown contacting plate **61**, connects terminal **72** of a solenoid **74** electrically to the positive terminal of the power supply **64** through contact finger **66** and contact plate **61**. A fourth contact finger **76**, shown contacting plate **62**, connects terminal **78** of solenoid **74** electrically to the negative terminal of the power supply **64** through contact finger **68** and contact plate **62**. A fifth contact finger **80**, axially aligned with contact plate **59** and offset axially from contact plate **61**, is also connected to terminal **78** of solenoid **74**.

Preferably the D.C. power supply **64** is a nine volt battery, or a D.C. power adaptor, whose input may be a conventional 120 volt, 60 Hz power source. The D.C. power supply and switching mechanism described with reference to **Figs. 4 to 7**, may be replaced by an A.C. power source connected directly across the terminals **72** and **78** of solenoid **74**. As the input current cycles, the polarity of solenoid **74** alternates, the actuator arm **38** moves relative to a toroidal permanent magnet **90** (shown in **Fig.8**), and the reciprocating magnets **50 – 52** reciprocate on the oscillating arms **20**, **22** and **24** which are driven by the actuator arm **38**.

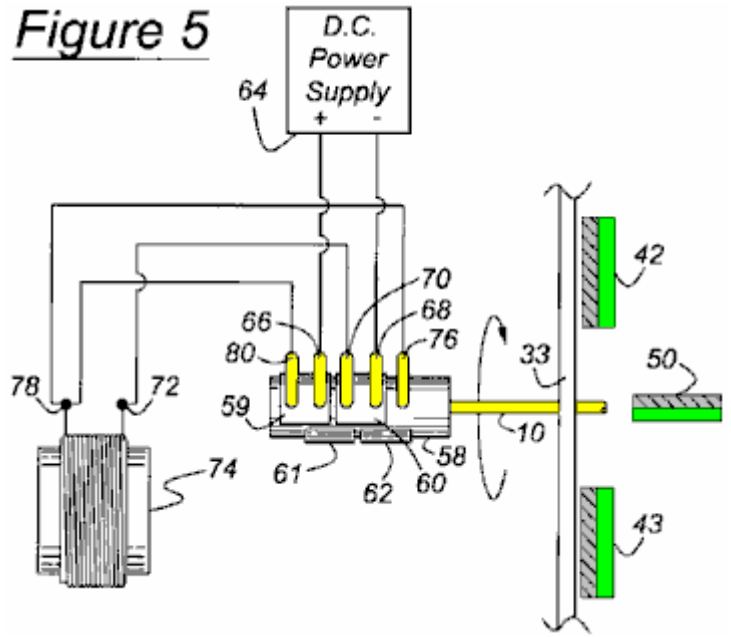

Fig.5 shows the state of the switch assembly when rotor shaft **10** has rotated approximately 180 degrees from the position shown in **Fig.4**. When the switch assembly is in the state shown in **Fig.5**, D.C. power supply **64** has its positive and negative terminals connected electrically by contact fingers **66** and **68** to contact plates **59** and **60**, respectively. Contact finger **70**, shown contacting plate **60**, connects terminal **72** of solenoid **74** electrically to the negative terminal of the power supply **64** through contact finger **68** and contact plate **60**. Contact finger **80**, shown contacting plate **59**, connects terminal **78** of solenoid **74** electrically to the positive terminal through contact finger **66** and contact plate **59**. Contact finger **76**, axially aligned with contact plate **62** and offset axially from contact plate **60**, remains connected to terminal **78** of solenoid **74**. In this way, the polarity of the solenoid **74** changes cyclically as the rotor **10** rotates through each one-half revolution.

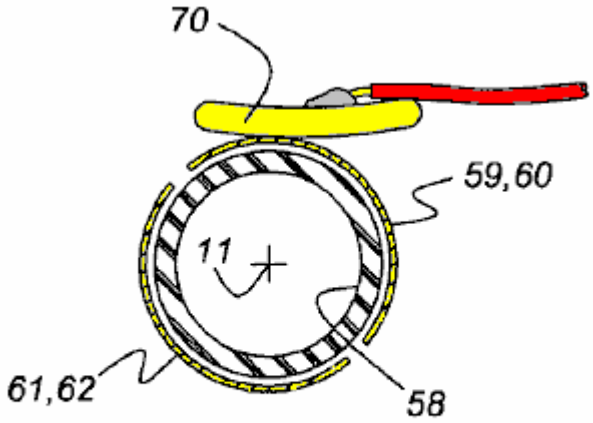

Figure 6

Fig.6 shows in cross-section, the cylinder **58** which is aligned with and driven by the rotor shaft **10**, a contact finger **70**, and the contact plates **59 – 62** of the switching assembly, which rotate with the rotor shaft and cylinder about the axis **11** .

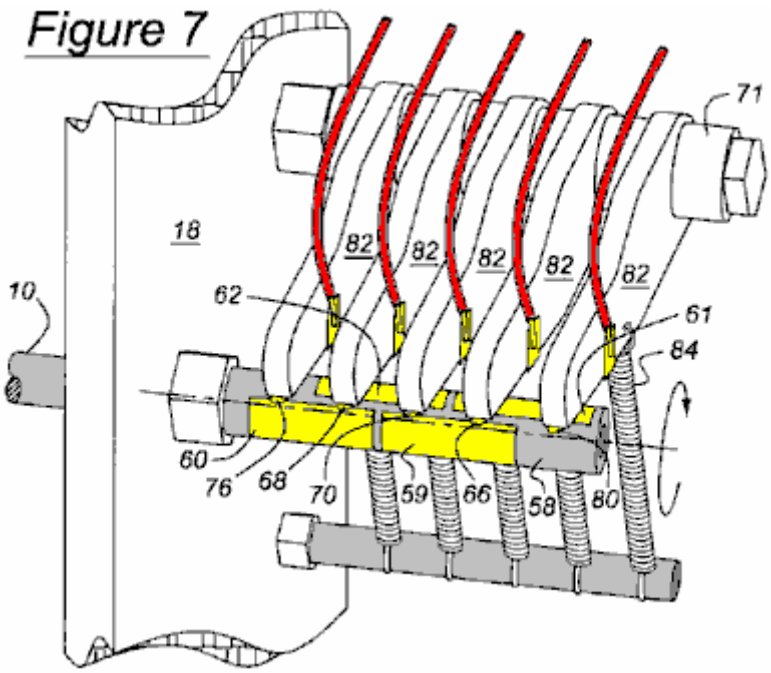

As **Fig.7** illustrates, axially spaced arms **82** are supported on a stub shaft **71**, preferably made of Teflon or another self-lubricating material, to facilitate the pivoting of the arms about the axis of the shaft **71**. Each contact finger **66**, **68**, **70**, **76** and **80** is located at the end of a arm **82**, and tension springs **84**, secured to each arm **82**, urge the contact fingers **66**, **68**, **70**, **76** and **80** continually toward engagement with the contact plates **59 – 62**.

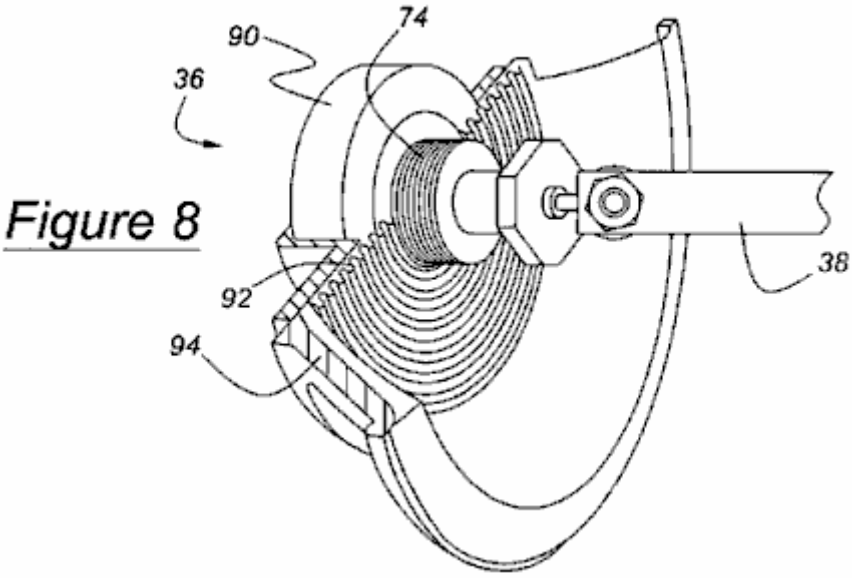

Figure 8

Fig.8 illustrates the actuator **36** for reciprocating the actuator arm **38** in response to rotation of the rotor shaft **10** and the alternating polarity of the solenoid **74**. The actuator **36**, includes the solenoid **74**, the toroidal permanent magnet **90**, an elastic flexible spider **92** for supporting the solenoid above the plane of the magnet, and a basket or frame **94**, to which the spider is secured. The actuator arm **38** is secured to solenoid **74**. The polarity of the solenoid **74** changes as rotor shaft **10** rotates, causing the solenoid and actuator arm **38** to reciprocate due to the alternating polarity of the solenoid relative to that of the toroidal permanent magnet **90**. As the solenoid polarity changes, the actuator arm **38** reciprocates linearly due to the alternating forces of attraction and repulsion of the solenoid **74** relative to the poles of the magnet **90**. The actuator arm **38** is secured to the oscillator arms **20**, **22** and **24** causing them to pivot, and the reciprocating magnets **50 – 52**, secured to the oscillator arms, to reciprocate. Alternatively, the reciprocating magnets **50 – 52** can be secured directly to the arm **38** , so that the magnets **50 – 52** reciprocate without need for an intermediary oscillating component.

It is important to note at this point in the description that, when two magnets approach each other with their poles of like polarity facing each other but slightly offset, there is a tendency for the magnets to rotate to the opposite pole of the other magnet. Therefore, in the preferred embodiment of the instant invention, the angular position at which the switch assembly of the actuator **36** changes between the states of **Fig.4** and **Fig.5** is slightly out of phase with the angular position of the rotor shaft **10** to help sling or propel the actuator arm **38** in the reverse direction at the preferred position of the rotor shaft. The optimum phase offset is approximately 5–8 degrees. This way, advantage is taken of each rotor magnet's tendency to rotate about its own magnetic field when slightly offset from the respective reciprocating magnet, and the repulsive force between like poles of the reciprocating magnets and the rotor magnets is optimised to propel the rotor magnet about the rotor axis **11**, thereby increasing the motor's overall efficiency.

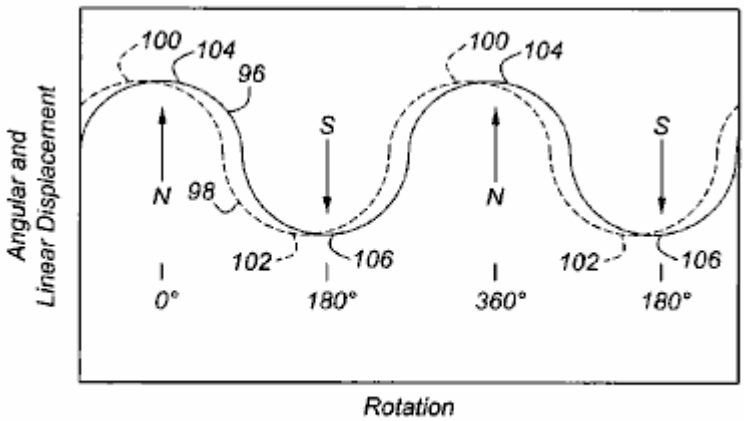

Figure 12

Fig.12 is a graph showing the angular displacement **96** of the rotor shaft **10** and linear displacement **98** of the reciprocating magnets **50 – 52**. Point **100** represents the end of the range of displacement of the reciprocating magnets **50 – 52** shown in FIGS. 2 and 9, and point 102 represents the opposite end of the range of displacement of the reciprocating magnets **50 – 52** shown in FIGS. 3 and 10. Point 104 represents the angular position of the

rotor magnets **42 – 49** when in the horizontal plane shown in FIGS. 2 and 9, and point 106 represents the angular position of the rotor magnets **42 – 49** when rotated one-half rotation to the horizontal plane shown in **Fig.3** and **Fig.10**. Preferably, the reciprocating magnets **50 – 52** and rotor magnets **42 – 49** are out of phase: the reciprocating magnets lead and the rotor magnets lag by several degrees. The reciprocating magnets **50 – 52** reach the respective extremities of their range of travel before rotor rotation moves the rotor magnets **42 – 49** into the horizontal plane.

When the reference poles **54** and opposite poles **56** of the rotor magnets **42 – 49** and reciprocating magnets **50 – 52** are arranged as shown in **Fig.2** and **Fig.3**, the rotor position is stable when the rotor magnets are in a horizontal plane. The rotor position is unstable in any other angular position, and it moves towards horizontal stability from any unstable position, and is least stable when the rotor magnets **42 – 49** are in a vertical plane. The degree of stability of the rotor shaft **10** is a consequence of the mutual attraction and repulsion of the poles of the rotor magnets **42 – 49** and reciprocating magnets **50 – 52** and the relative proximity among the poles. In **Fig.2**, the reciprocating magnets **50 – 52** are located at a first extremity of travel. In **Fig.3**, the reciprocating magnets **50 – 52** have reciprocated to the opposite extremity of travel, and the rotor magnets have rotated one-half revolution from the position shown in **Fig.2**.

When the rotor is stopped, its rotation can be easily started manually by applying torque in either direction. Actuator **36** sustains rotor rotation after it is connecting to its power source. Rotation of rotor shaft **10** about axis **11** is aided by cyclic movement of the reciprocating magnets **50 – 52**, their axial location between the rotor magnet pairs **42 – 43** , **44 – 45** , **46 – 47** and **48 – 49**, the disposition of their poles in relation to the poles of the rotor magnets, and the frequency and phase relationship of their reciprocation relative to rotation of the rotor magnets. Actuator **36** maintains the rotor **10** rotating and actuator arm **38** oscillating at the same frequency, the phase relationship being as described with reference to **Fig.12**.

With the rotor magnets **42** and **49** as shown in **Fig.2**, when viewed from above, the north poles **54** of the rotor magnets on the left-hand side of axis **11** face a first axial direction **110**, i.e., toward the actuator **36**, and the north poles **54** of the rotor magnets on the right-hand side of axis **11** face in the opposite axial direction **112**, away from actuator **36**. When the rotor magnets **42 – 49** are located as in **Fig.2**, the north poles **54** of reciprocating magnets **50 – 52** are adjacent the south poles **56** of rotor magnets **45**, **47** and **49** , and the south poles **56** of reciprocating magnets **50 – 52** are adjacent the north poles **54** of rotor magnets **44**, **46** and **48**.

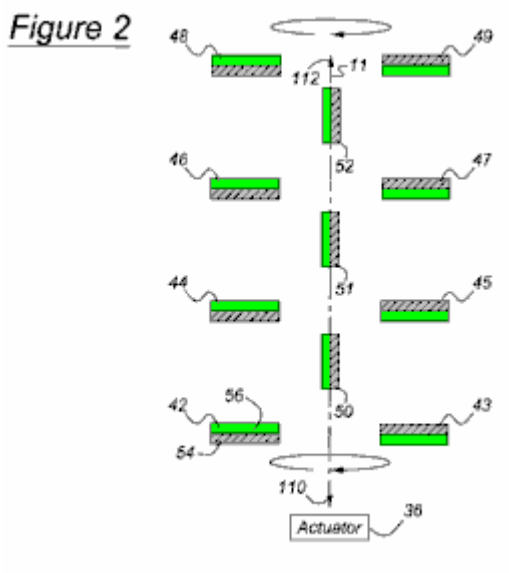

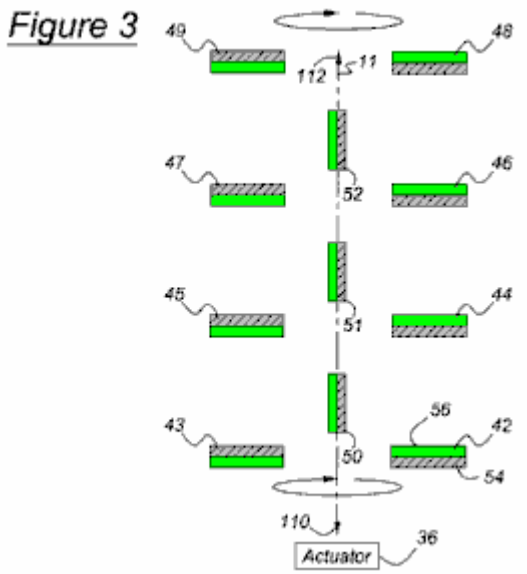

Furthermore, when the rotor shaft 10 rotates to the position shown in **Fig.2**, the reciprocating magnets **50 – 52** are located at, or near, one extremity of their axial travel, so that the north poles **54** of reciprocating magnets **50 – 52** are located close to the south poles **56** of rotor magnets **45**, **47** and **49**, respectively, and relatively more distant from the north poles **54** of rotor magnets **43**, **45** and **47**, respectively. Similarly, the south poles **56** of reciprocating magnets **50 – 52** are located close to the north poles of rotor magnet **44**, **46** and **48**, respectively, and relatively more distant from the south poles of rotor magnets **42**, **44** and **46**, respectively.

With the rotor magnets **42** and **49** rotated into a horizontal plane one-half revolution from the position of **Fig.1B**, when viewed from above as shown in **Fig.3**, the north poles **54** of reciprocating magnets **50 – 52** are located adjacent the south poles of rotor magnets **42**, **44** and **46**, and the south poles **56** of reciprocating magnets **50 – 52** are located adjacent the north poles **54** of rotor magnets **43**, **45** and **47**, respectively. When the rotor **10** shaft is located as shown in **Fig.3**, the reciprocating magnets **50 – 52** are located at or near the opposite extremity of their

axial travel from that of **Fig.2**, such that the north poles **54** of reciprocating magnets **50 – 52** are located close to the south poles **56** of rotor magnet **42**, **44** and **46**, respectively, and relatively more distant from the north poles of rotor magnets **44**, **46** and **48**, respectively. Similarly, when the rotor shaft 10 is located as shown in FIG. 3, the south poles 56 of reciprocating magnets **50 – 52** are located close to the north poles of rotor magnet **43**, **45** and **47**, respectively, and relatively more distant from the south poles of rotor magnets **45**, **47** and **49**, respectively.

In operation, rotation of rotor shaft **10** in either angular direction is started manually or with a starter-actuator (not shown). Actuator **36** causes reciprocating magnets **50 – 52** to oscillate or reciprocate at the same frequency as the rotational frequency of the rotor shaft **10**, i.e. one cycle of reciprocation per cycle of rotation, preferably with the phase relationship illustrated in **Fig.12**. When the reciprocating magnets **50 – 52** are located as shown in **Fig.2**, the rotor shaft **10** will have completed about one-half revolution from the position of **Fig.3** to the position of **Fig.2**.

Rotation of the rotor **10** is aided by mutual attraction between the north poles **54** of the reciprocating magnets **50 – 52** and the south poles **56** of the rotor magnets **43**, **45**, **47** and **49** that are then closest respectively to those north poles of reciprocating magnets **50 – 52**, and mutual attraction between the south poles of reciprocating magnets **50 – 52** and the north poles of the rotor magnets **42**, **44**, **46** and **48** that are then closest respectively to the north poles of the reciprocating magnets.

Assume rotor shaft **10** is rotating counterclockwise when viewed from the actuator **36**, and the rotor magnets **42**, **44**, **46** and **48** are located above rotor magnets **43**, **45**, **47** and **49**. With the rotor shaft **10** positioned so that the reciprocating magnets **50 – 52** are approximately mid-way between the positions shown in **Fig.2** and **Fig.3** and moving toward the position shown in **Fig.2**, as rotation proceeds, the south pole of each reciprocating magnet **50 – 52** applies a downward attraction to the north pole **54** of the closest of the rotor magnets **44**, **46** and **48**, and the north pole **54** of each reciprocating magnet **50 – 52** attracts upwards the south pole **56** of the closest rotor magnet **45**, **47** and **49**. This mutual attraction of the poles causes the rotor to continue rotating counterclockwise to the position of **Fig.2**.

Then the reciprocating magnets **50 – 52** begin to move toward the position shown in **Fig.3**, and rotor inertia overcomes the steadily decreasing force of attraction between the poles as they move mutually apart, permitting the rotor shaft **10** to continue its counterclockwise rotation into the vertical plane where rotor magnets **43**, **45**, **47** and **49** are located above rotor magnets **42**, **44**, **46** and **48**. As rotor shaft **10** rotates past the vertical plane, the reciprocating magnets **50 – 52** continue to move toward the position of **Fig.3**, the south pole **56** of each reciprocating magnet **50 – 52** attracts downward the north pole of the closest rotor magnet **43**, **45** and **47**, and the north pole **54** of each reciprocating magnet **50 – 52** attracts upward the south pole **56** of the closest rotor magnet **42**, **44** and **46**, causing the rotor **10** to rotate counterclockwise to the position of **Fig.3**. Rotor inertia maintains the counterclockwise rotation, the reciprocating magnets **50 – 52** begin to move toward the position shown in **Fig.2**, and the rotor shaft **10** returns to the vertical plane where rotor magnets **43**, **45**, **47** and **49** are located above rotor magnets **42**, **44**, **46** and **48**, thereby completing one full revolution.

Figure 9

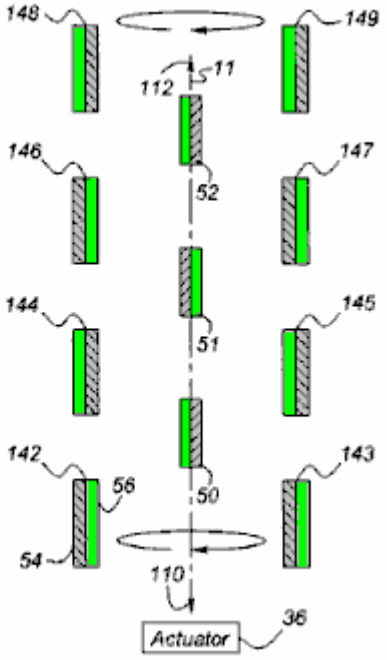

Figure 10

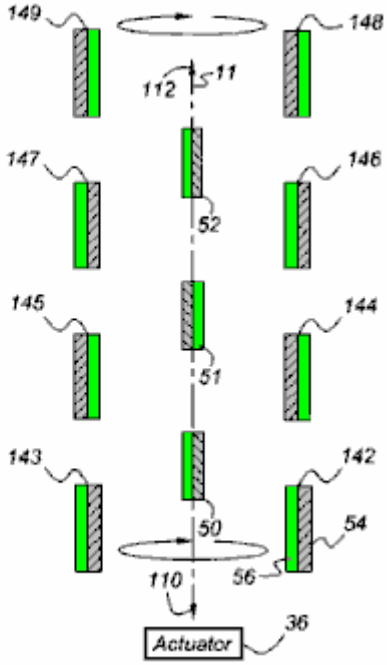

Fig.9 and **Fig.10** show a second arrangement of the motor in which the poles of the rotor magnets **142 – 149** are parallel to, and face the same direction as those of the reciprocating magnets **50 – 52**. Operation of the motor arranged as shown in **Fig.9** and **Fig.10** is identical to the operation described with reference to **Fig.2** and **Fig.3**. In the embodiment of **Fig.9** and **Fig.10**, the poles of the reciprocating magnets **50 – 52** face more directly the poles of the rotor magnets **142 – 149** in the arrangement of **Fig.2** and **Fig.3**. The forces of attraction and repulsion between the poles are greater in the embodiment of **Fig.9** and **Fig.10**, therefore, greater torque is developed. The magnitude of torque is a function of the magnitude of the magnetic forces, and the distance through which those force operate.

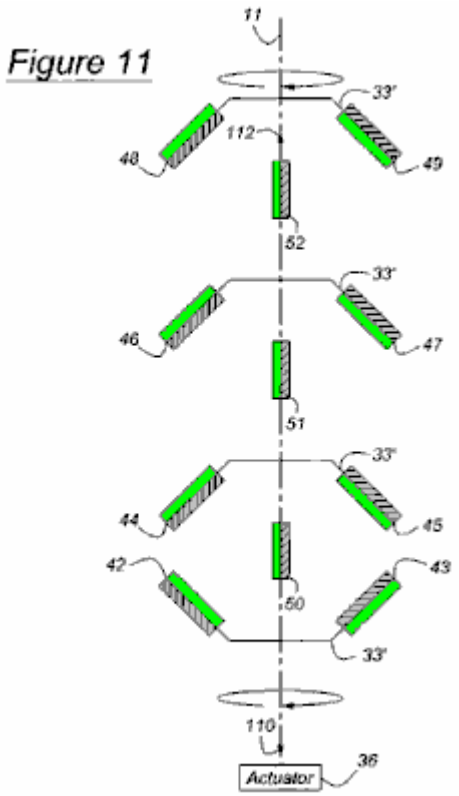

Fig.11 shows a third embodiment of the motor in which the radial outer portion of the rotor plates **33'** are skewed relative to the axis **11** such that the poles of the rotor magnets **42 – 49** are canted relative to the poles of the reciprocating magnets **50 – 52**. Operation of the motor arranged as shown in **Fig.11** is identical to the operation described with reference to **Fig.2** and **Fig.3**.

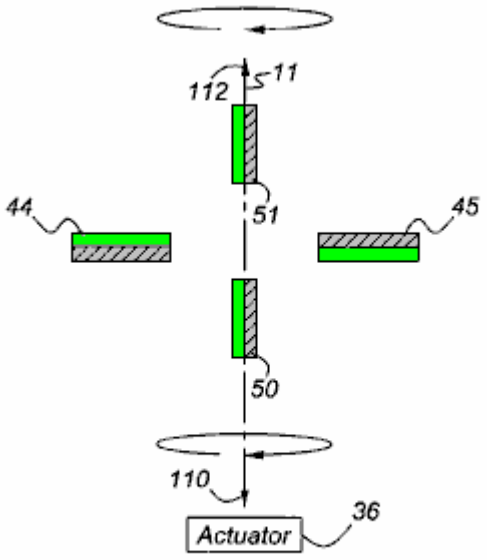

Figure 13

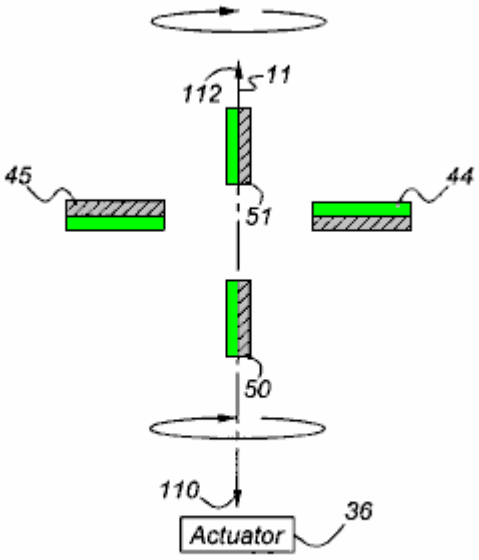

Figure 14

Fig.13 and **Fig.14** show a fourth embodiment of the motor in which each of two reciprocating magnets **50** and **51** is located on an axially opposite side of a rotor magnet pair **44** and **45**. Operation of the motor arranged as shown in **Fig.13** and **Fig.14** is identical to the operation described with reference to **Fig.2** and **Fig.3**.

The direction of the rotational output can be in either angular direction depending on the direction of the starting torque.

The motor can produce reciprocating output on actuator arm **38** instead of the rotational output described above upon disconnecting actuator arm **38** from actuator **36**, and connecting a crank, or a functionally similar device, in the drive path between the actuator and the rotor shaft **10**. The crank converts rotation of the rotor shaft **10** to reciprocation of the actuator **30**. In this case, the rotor shaft **10** is driven rotatably in either direction by the power source, and the output is taken on the reciprocating arm **38**, which remains driveably connected to the oscillating arms **20**, **22** and **24**. The reciprocating magnets **50**, **51** and **52** drive the oscillating arms **20**, **22** and **24**.

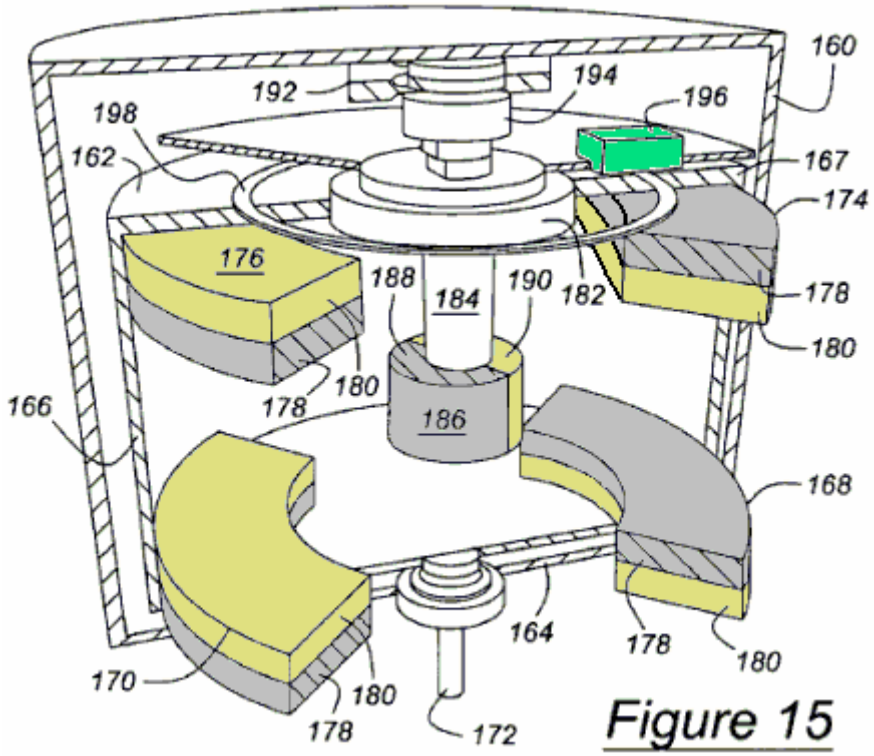

Figure 15

In the perspective cross sectional view shown in **Fig.15**, an outer casing **160** contains a motor according to this invention functioning essentially the same as the embodiment of the more efficient motor shown in **Fig.1A** and **Fig.1B**, but having a commercial appearance. The rotor includes discs **162** and **164** , which are connected by an outer drum **166** of nonmagnetic material. The upper surface **167** of drum **166** forms a magnetic shield surrounding the rotor. Mounted on the lower disc **164** are curved rotor magnets **168** and **170**, which extend angularly about a rotor shaft **172**, which is secured to the rotor. Mounted on the upper disc **162**, are curved rotor magnets **174** and **176**, which extend angularly about the rotor shaft **172**. The reference poles are **178**, and the opposite poles are **180**. A bushing **182** rotates with the rotor.

A reciprocating piston **184**, which moves vertically but does not rotate, supports reciprocating magnet **186**, whose reference pole **188** and opposite pole **190** extend angularly about the axis of piston **184** .

A solenoid magnet **192**, comparable to magnet **90** of the actuator **36** illustrated in **Fig.8**, is located adjacent a solenoid **194**, comparable to solenoid **74** of **Fig.4** and **Fig.5**. The polarity of solenoid **194** alternates as the rotor rotates. Simply stated, as a consequence of the alternating polarity of the solenoid **194**, the reciprocating piston **184** reciprocates which, in turn, continues to advance the rotor more efficiently, using the attraction and repulsion forces between the reciprocating magnets **186** and rotor magnets **168**, 170, **174** and **176** as described above and shown in any of the different embodiments using **Fig.2**, **Fig.3**, **Fig.9**, **Fig.10**, **Fig.11**, **Fig.13** and **Fig.14**. Of course, just as the alternating polarity of the solenoid can put the motor in motion, so can the turning of the rotor, as described above. A photosensor **196** and sensor ring **198** can be used, as an alternative to the mechanical embodiment described in **Fig.4** to **Fig.7**, to determine the angular position of the rotor so as to alternate the polarity of the solenoid **194** with the rotor to correspond with the phase and cycle shown in **Fig.12**.

In accordance with the provisions of the patent statutes, the present invention has been described in what is considered to represent its preferred embodiment. However, it should be noted that the invention can be

constructed otherwise than as specifically illustrated and described without departing from its spirit or scope. It is intended that all such modifications and alterations be included insofar as they come within the scope of the appended claims or the equivalents thereof.

CLAIMS

1. A motor comprising: a rotor supported for rotation about an axis; a first pair of rotor magnets supported on the rotor, including a first rotor magnet and a second rotor magnet spaced angularly about the axis in an opposite radial direction from the first rotor magnet such that the first pair of rotor magnets rotate about the axis along a path having an outermost circumferential perimeter; a first reciprocating magnet supported for movement toward and away from the first and second rotor magnets, the first reciprocating magnet being axially disposed in a first space within a boundary defined by longitudinally extending the outermost circumferential perimeter of the first pair of rotor magnets, and the first reciprocating magnet is a permanent dipole magnet having a reference pole facing laterally from the axis and an opposite pole facing in an opposite lateral direction from the reference pole; and an actuator for moving the first reciprocating magnet cyclically toward and away from the first pair of rotor magnets without passing through a centre of rotation of the first pair of rotor magnets so as to simultaneously create repulsion and attraction forces with the first pair of rotor magnets to cyclically rotate the first pair of rotor magnets relative to the first reciprocating magnet in one rotational direction.

2. The motor of claim 1 further comprising: a second reciprocating magnet axially disposed in a second space within the boundary defined by longitudinally extending the outermost circumferential perimeter of the first pair of rotor magnets at an axial opposite side of the first pair of rotor magnets, and supported for movement toward and away from the first and second rotor magnets without passing through the centre of rotation of the first pair of rotor magnets.

3. The motor of claim 1 further comprising: a second pair of rotor magnets supported on the rotor, spaced axially from the first pair of rotor magnets, the second pair including a third rotor magnet and a fourth rotor magnet spaced angularly about the axis in an opposite radial direction from the third rotor magnet; and wherein the first reciprocating magnet is located in said first space disposed axially between the first and second rotor magnet pairs, and the actuator cyclically moves the first reciprocating magnet toward and away from the first and second pairs of rotor magnets without passing through a centre of rotation of the second pair of rotor magnets.

4. The motor of claim 1 further comprising: a second pair of rotor magnets supported on the rotor, spaced axially from the first pair of rotor magnets, the second pair including a third rotor magnet and a fourth rotor magnet spaced angularly about the axis in an opposite radial direction from the third rotor magnet; a third pair of rotor magnets supported on the rotor, spaced axially from the first and second pairs of rotor magnets, the third pair including a fifth rotor magnet and a sixth rotor magnet spaced angularly about the axis in an opposite radial direction from the fifth rotor magnet; and a second reciprocating magnet disposed in a second space located axially between the second and third rotor magnet pairs and within the boundary defined by longitudinally extending the outermost circumferential perimeter of the first pair of rotor magnets, and the second reciprocating magnet being supported for movement toward and away from the second and third pairs of rotor magnet; and wherein the first reciprocating magnet disposed in the first space is still further located axially between the first and second rotor magnet pairs, and the actuator cyclically moves the first reciprocating magnet toward and away from the first and second pairs of rotor magnets without passing through a centre of rotation of the second pair of rotor magnets, and the second reciprocating magnet toward and away from the second and third pairs of rotor magnets without passing through the centre of rotation of the second pair of rotor magnets and through a centre of rotation of a third pair of rotor magnets.

5. The motor of claim 1 further comprising: an arm supported for pivotal oscillation substantially parallel to the axis, the first reciprocating magnet being supported on the arm adjacent the first and second rotor magnets; and wherein the actuator is driveably connected to the arm.

6. The motor of claim 1 wherein: the first and second rotor magnets are permanent dipole magnets, the first rotor magnet having a reference pole facing axially away from the first reciprocating magnet and an opposite pole facing axially toward the first reciprocating magnet, the second rotor magnet having a reference pole facing axially toward the first reciprocating magnet and an opposite pole facing axially away from the first reciprocating magnet.

7. The motor of claim 1 wherein: the first and second rotor magnets are magnet is a permanent dipole magnets magnet, the first rotor magnet having a reference pole facing axially away from the first reciprocating magnet and an opposite pole facing axially toward the first reciprocating magnet, the second rotor magnet having a reference pole facing axially toward the first reciprocating magnet and an opposite pole facing axially away from the first reciprocating magnet; and the motor further comprising: a second pair of rotor magnets supported on the rotor, spaced axially from the first pair of rotor magnets, the second pair including a third

permanent dipole rotor magnet having a reference pole facing axially toward the first reciprocating magnet and an opposite pole facing away from the first reciprocating magnet, and a fourth permanent dipole rotor magnet spaced angularly about the axis in an opposite radial direction from the third rotor magnet, the fourth permanent dipole rotor magnet having a reference pole facing axially away from the first reciprocating magnet and an opposite pole facing toward the first reciprocating magnet; and wherein the first reciprocating magnet disposed in said first space is still further located axially between the first and second rotor magnet pairs, and the actuator cyclically moves the first reciprocating magnet toward and away from the first and second pairs of rotor magnets without passing through a centre of rotation of the second pair of rotor magnets.

8. The motor of claim 1 wherein: the first and second rotor magnets are permanent dipole magnets, each rotor magnet having a reference pole facing in a first lateral direction relative to the reference pole of the first reciprocating magnet and an opposite pole facing in a second lateral direction opposite the first lateral direction of the respective rotor magnet.

9. The motor of claim 1 wherein: the first and second rotor magnets are permanent dipole magnets, each rotor magnet having a reference pole facing in a first lateral direction relative to the reference pole of the first reciprocating magnet and an opposite pole facing in a second lateral direction opposite the first lateral direction of the respective rotor magnet; and the motor further comprising: a second pair of rotor magnets supported for rotation on the rotor about the axis, the second pair of rotor magnets being spaced axially from the first pair of rotor magnets, the second pair including a third permanent dipole rotor magnet and a fourth permanent dipole rotor magnet, the third and fourth rotor magnets each having a reference pole facing in the second lateral direction and an opposite pole facing in the first lateral direction, and wherein the first reciprocating magnet disposed in the first space is still further located axially between the first and second rotor magnet pairs, and the actuator cyclically moves the first reciprocating magnet toward and away from the first and second pairs of rotor magnets without passing through a centre of rotation of the second pair of rotor magnets.

10. The motor of claim 3 further comprising: a third pair of rotor magnets supported on the rotor, spaced axially from the first and second pairs of rotor magnets, the third pair including a fifth rotor magnet and a sixth rotor magnet spaced angularly about the axis in an opposite radial direction from the fifth rotor magnet; a second reciprocating magnet located in a second space within the boundary defined by longitudinally extending the outermost circumferential perimeter of the first pair of rotor magnets and axially between the second and third rotor magnet pairs, and the second reciprocating magnet being supported for movement toward and away from the second and third pairs of rotor magnet; a first arm supported for pivotal oscillation substantially parallel to the axis, the first reciprocating magnet being supported on the arm adjacent the first and second pairs of rotor magnets; and a second arm supported for pivotal oscillation substantially parallel to the axis, the second reciprocating magnet being supported on the arm adjacent the second and third pairs of rotor magnets; and wherein the actuator is driveably connected to the first and second arms.

11. A motor comprising: a rotor supported for rotation about an axis; a first pair of rotor magnets supported on the rotor, including a first rotor magnet and a second rotor magnet spaced angularly about the axis from the first rotor magnet such that the first pair of rotor magnets rotate about the axis along a circumferential path having an outermost perimeter; a first arm supported for pivotal oscillation along the axis, located adjacent the first and second rotor magnets; a first reciprocating magnet, supported on the first arm for movement toward and away from the first and second rotor magnets, the first reciprocating magnet being disposed axially within a first space within a boundary defined by longitudinally extending the outermost perimeter of the first circumferential path of the first pair of rotor magnets; a second pair of rotor magnets supported on the rotor, spaced axially from the first pair of rotor magnets, the second pair including a third rotor magnet, and a fourth rotor magnet spaced angularly about the axis from the third rotor magnet; a third pair of rotor magnets supported on the rotor, spaced axially from the first and second pairs of rotor magnets, the third pair including a fifth rotor magnet, and a sixth rotor magnet spaced angularly about the axis from the fifth rotor magnet; a second arm supported for pivotal oscillation along the axis between the second and third pairs of rotor magnets; a second reciprocating magnet located axially between the second and third rotor magnet pairs and supported on the second arm for movement toward and away from the second and third pairs of rotor magnet; and an actuator for moving the first reciprocating magnet cyclically toward and away from the first pair of rotor magnets without passing through a centre of rotation of the first pair of rotor magnets so as to simultaneously create repulsion and attraction forces with the first pair of rotor magnets to cyclically rotate the first pair of rotor magnets relative to the first reciprocating magnet in one rotational direction; and wherein the first reciprocating magnet disposed in the first space is still further located axially between the first and second rotor magnet pairs, and the actuator cyclically moves the first arm and first reciprocating magnet toward and away from the first and second pairs of rotor magnets without passing the first reciprocator magnet through a centre of rotation of the second pair of rotor magnets, and moves the second arm and second reciprocating magnet toward and away from the second and third pairs of rotor magnets without passing the second reciprocator magnet through the centre of rotation of the second pair of rotor magnets and through a centre of rotation of the third pair of rotor magnets.

12. The motor of claim 11 wherein the actuator further comprises: a rotor shaft driveably connected to the rotor for rotation therewith; first and second bridge plates, mutually angularly aligned about the axis, extending over a first angular range about the axis; third and fourth bridge plates, offset axially from the first and second bridge plates, mutually angularly aligned about the axis, extending over a second angular range about the axis; an electric power supply including first and second terminals; a first contact connecting the first power supply terminal alternately to the first bridge plate and the third bridge plate as the rotor rotates; a second contact connecting the second power supply terminal alternately to the second bridge plate and the fourth bridge plate as the rotor rotates; a toroidal permanent magnet; a solenoid supported above a pole of the toroidal permanent magnet, including first and second terminals; a third contact connecting the first solenoid terminal alternately to the first and second power supply terminals through the first and fourth bridge plates and first contact as the rotor rotates; a fourth contact alternately connecting and disconnecting the second power supply terminal and the second solenoid terminal as the rotor rotates; and a fifth contact alternately connecting and disconnecting the first power supply terminal and the second solenoid terminal as the rotor rotates.

13. The motor of claim 11 wherein the actuator further comprises: a toroidal permanent magnet; an A.C. power source; and a solenoid supported for displacement adjacent a pole of the toroidal permanent magnet, including first and second terminals electrically connected to the power source.

14. A motor comprising: a rotor supported for rotation about an axis; a first rotor magnet supported for rotation about the axis along a first circumferential path having an outermost perimeter and a centre at the axis, the first rotor magnet having a first permanent reference pole facing laterally toward the axis and a first permanent opposite pole facing in an opposite lateral direction toward the first reference pole; a pair of reciprocating magnets supported for movement toward and away from the rotor magnet, including a first reciprocating magnet and a second reciprocating magnet spaced axially from the first rotor magnet, each reciprocating magnet being at least partially disposed within a first axial space having a boundary defined by longitudinally extending the outermost perimeter of the first circumferential path of the first rotor magnet, wherein the rotor magnet is located axially between the first and second reciprocating magnets; and an actuator for moving the pair of reciprocating magnets cyclically toward and away from the rotor magnet without passing through the centre of the first circumferential path so as to simultaneously create repulsion and attraction forces with the first rotor magnet to cyclically rotate the rotor magnet relative to the pair of reciprocating magnets in one rotational direction.

15. The motor of claim 14 wherein the first and second reciprocating magnets are permanent dipole magnets with each having a reference pole facing laterally from the axis and an opposite pole facing in an opposite lateral direction from its corresponding reference pole.

16. The motor of claim 15 further comprising: a second rotor magnet spaced axially from the first rotor magnet, the second rotor magnet being supported for rotation about the axis along a second circumferential path having an outermost perimeter about the centre, the second rotor magnet including a second permanent reference pole facing laterally toward the axis and a second permanent opposite pole facing in an opposite lateral direction toward the second reference pole; and wherein the second reciprocating magnet is located axially between the first and second rotor magnets and at least partially within a second axial space having a boundary defined by longitudinally extending the outermost perimeter of the second circumferential path of the second rotor magnet, and the actuator cyclically moves the second reciprocating magnet away from and towards the second rotor magnet.

The Magnetic Motor of Charles Flynn

US Patent 5,455,474 **3rd October 1995** **Inventor: Charles Flynn**

MAGNETIC MOTOR CONSTRUCTION

This patent gives details of a permanent magnet motor which uses electromagnet shielding to achieve continuous rotation. The input power is very small with even a 9-volt battery being able to operate the motor. The output power is substantial and operation up to 20,000 rpm is possible. Construction is also very simple and well within the capabilities of the average handyman. It should be realised that the power of this motor comes from the permanent magnets and not from the small battery input used to prevent lock-up of the magnetic fields.

ABSTRACT

The present invention is a motor with permanent magnets positioned so that there is magnetic interaction between them. A coil placed in the space between the permanent magnets is used to control the magnetic interaction. This coil is connected to a source of electric potential and controlled switching so that closing the switch places a voltage across the coil and affects the magnetic interaction between the permanent magnets as to produce rotational movement of the output shaft.

US Patent References:

3096467	Brushless d. c. motor with permanent magnet rotor	July, 1963	Angus et al.	318/138
3569806	Starting Arrangement for Solid-State Motor	March, 1971	Brailsford	318/254
3670189	Gated Permanent Magnet Motor	June, 1972	Monroe	310/181
3796039	Electric Micromotor	March, 1974	Lucien	310/268
3883633	Commutatorless Motor	May, 1975	Kohler	310/152
4151431	Permanent Magnet Motor	April, 1979	Johnson	310/12
4187441	High-power-density Brushless DC Motor	February, 1980	Oney	310/112
4758756	Vernier-type Electrodynamic Machine	July, 1988	Pouillange	310/152
4875110	Rotary-head Apparatus with Motor Magnet	October, 1989	Kazama	310/268
4972112	Brushless DC Motor	November, 1990	Kim	310/181
5179307	Direct Current Brushless Motor	January, 1993	Porter	310/268

Foreign References:

DE210005	July, 1960	310/181
JP0025153	February, 1982	310/181
JP01521078	September, 1982	310/152
JP0002840	January, 1987	310/152

BACKGROUND OF THE INVENTION

The present invention is an improvement over the inventions disclosed in patent applications 07/322,121 and 07/828,703. The devices disclosed in those applications relate to means to produce useful energy using permanent magnets as the driving source. This is also true of the present invention which represents an important improvement over the known constructions and one which is simpler to construct, can be made to be self starting, is easier to adjust, and is less likely to get out of adjustment. The present construction is also relatively easy to control, is relatively stable and produces an amazing amount of output energy considering the source of driving energy that is used. The present construction makes use of permanent magnets as the source of driving energy but shows a novel means of controlling the magnetic interaction between the magnet members in a manner which is relatively rugged, produces a substantial amount of output energy and torque, and in a device capable of being used to generate substantial amounts of energy that is useful for many different purposes.

The present invention resides has a fixed support structure with one or more fixed permanent magnets such as an annular permanent magnet mounted on it with the pole faces of the permanent magnet on opposite faces of the magnet. The device has one or more relatively flat coils positioned around the edge of one of the faces of the magnet, and a shaft extends through the permanent magnet with one or more other permanent magnets attached to it. The spaced permanent magnets and the fixed permanent magnet have their polarities arranged to produce a magnetic interaction between them. The device also includes a circuit for selectively and sequentially energising the coils to control the magnetic interaction between the magnets in such a manner as to produce

rotation between them. Various methods can be used to control the application of energy to the coils including a timer or a control mechanism mounted on the rotating shaft. This design can be made to be self-starting or to be started with some initial help to establish rotation.

OBJECTS OF THE INVENTION

It is a principal object of the present invention to teach the construction and operation of a relatively simple, motor-like device using permanent magnets in an unique manner to generate rotational or other forms of movement.

Another object is to teach the construction and operation of a relatively simple, motor-like device having novel means for coupling and/or decoupling relatively moveable permanent magnets to produce motion.

Another object is to provide novel means for controlling the coupling and decoupling of relatively moveable permanent magnets.

Another object is to make the generation of rotational energy less expensive and more reliable.

Another object is to teach a novel way of generating energy by varying magnetic interaction forces between permanent magnets.

Another object is to provide an inexpensive way of producing energy.

Another object is to provide a substitute source of energy for use in places where conventional motors, generators and engines are used.

These and other objects and advantages of the present invention will become apparent after considering the following detailed specification of preferred embodiments in conjunction with the accompanying drawings.

BRIEF DESCRIPTION OF THE DRAWINGS

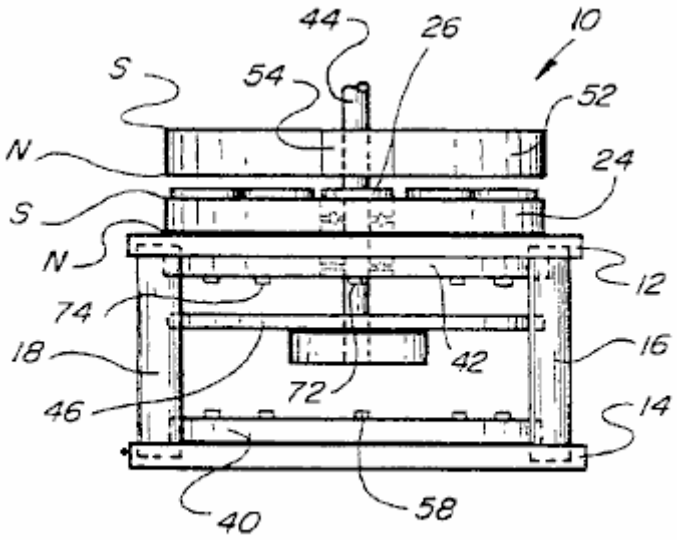

Fig. 1

Fig.1 is a side view of a magnetically powered device constructed according to the present invention.

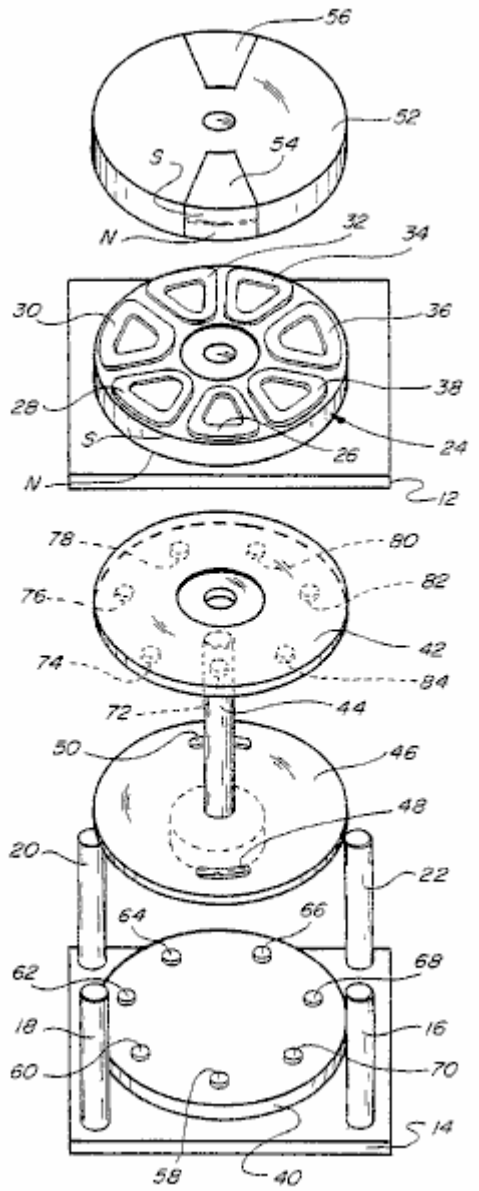

Fig. 2

Fig.2 is an exploded view of the device shown in Fig.1.

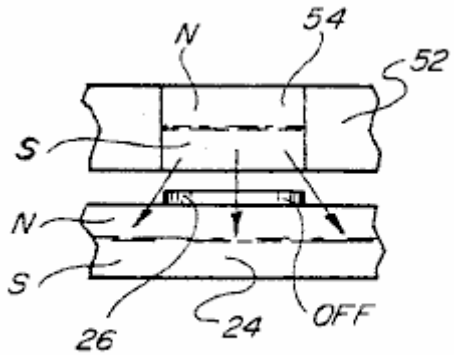

Fig. 3

Fig.3 is a fragmentary side view of one of the movable magnets and the fixed magnet, in one position of the device.

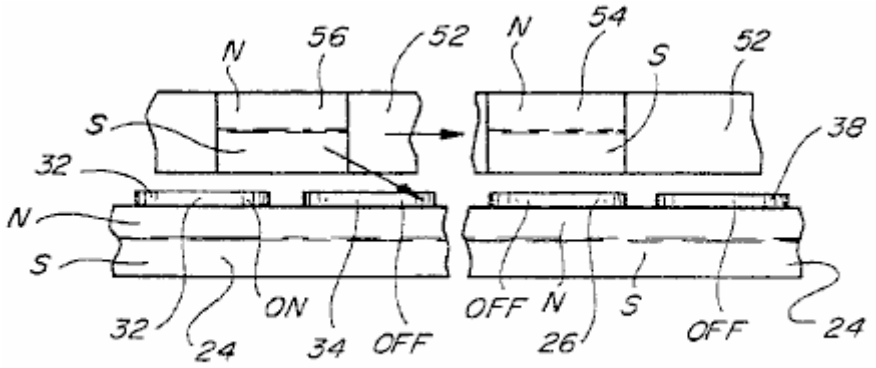

Fig. 4

Fig.4 is a view similar to Fig.3 but showing the relationship between the other movable magnets and the fixed magnet in the same rotational position of the device.

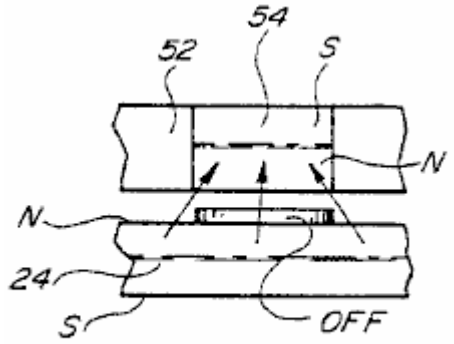

Fig. 5

Fig.5 is a fragmentary view similar to Fig.3 but showing a repulsion interaction between the relatively movable permanent magnets.

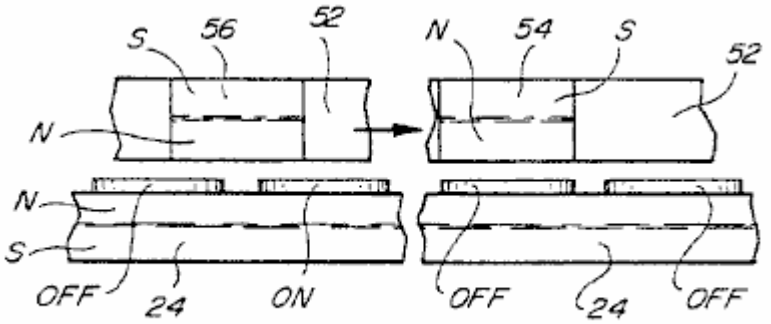

Fig. 6

Fig.6 is a view similar to Fig.4 for the condition shown in Fig.5.

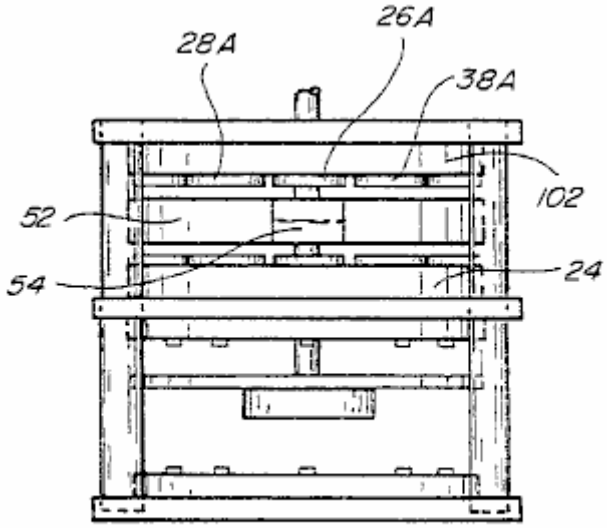

Fig. 7

Fig.7 is a side view showing another embodiment which is capable of producing even greater energy and torque.

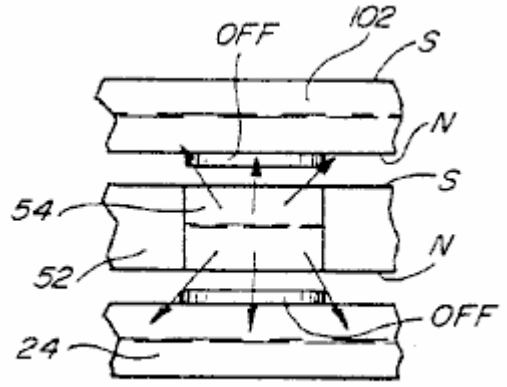

Fig. 8

Fig.8 is a fragmentary elevational view similar to Fig.3 for the device of Fig7.

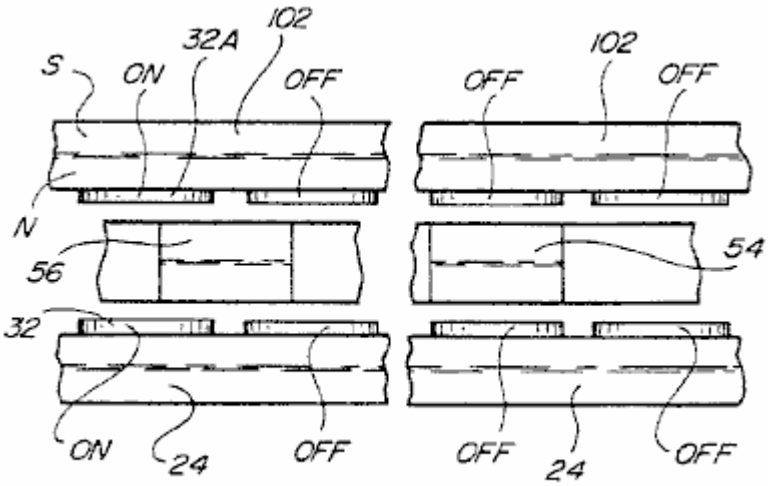

Fig. 9

Fig.9 is a view similar to Fig.4 for the construction shown in Fig.7.

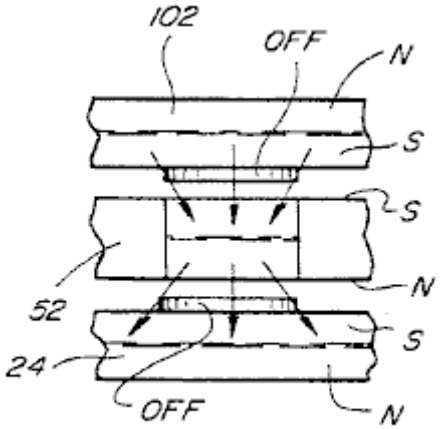

Fig. 10

Fig.10 is a view similar to Fig.3 for the device shown in Fig.7 but with the polarity of one of the fixed permanent magnets reversed.

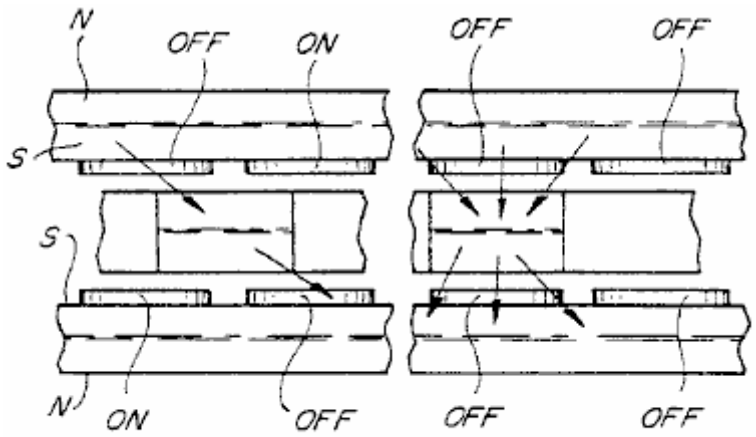

Fig. 11

Fig.11 is a fragmentary view similar to Fig.4 for the device as shown in Fig.7 and Fig.10.

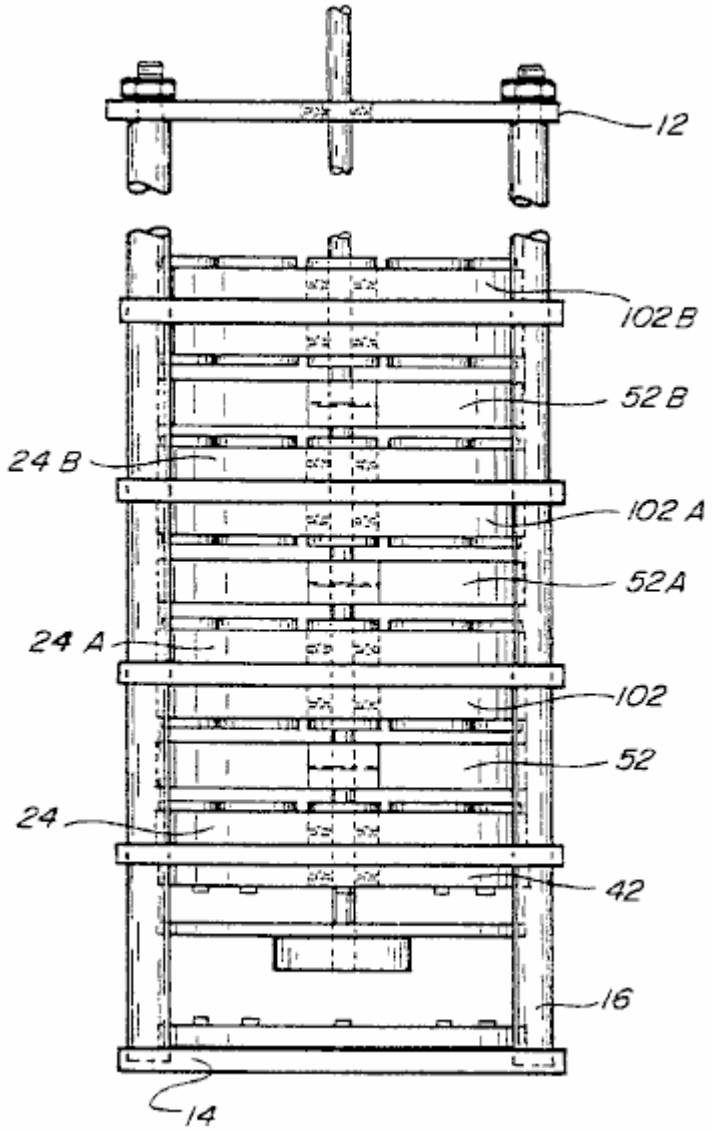

Fig. 12

Fig.12 is a side elevational view of another embodiment of the device.

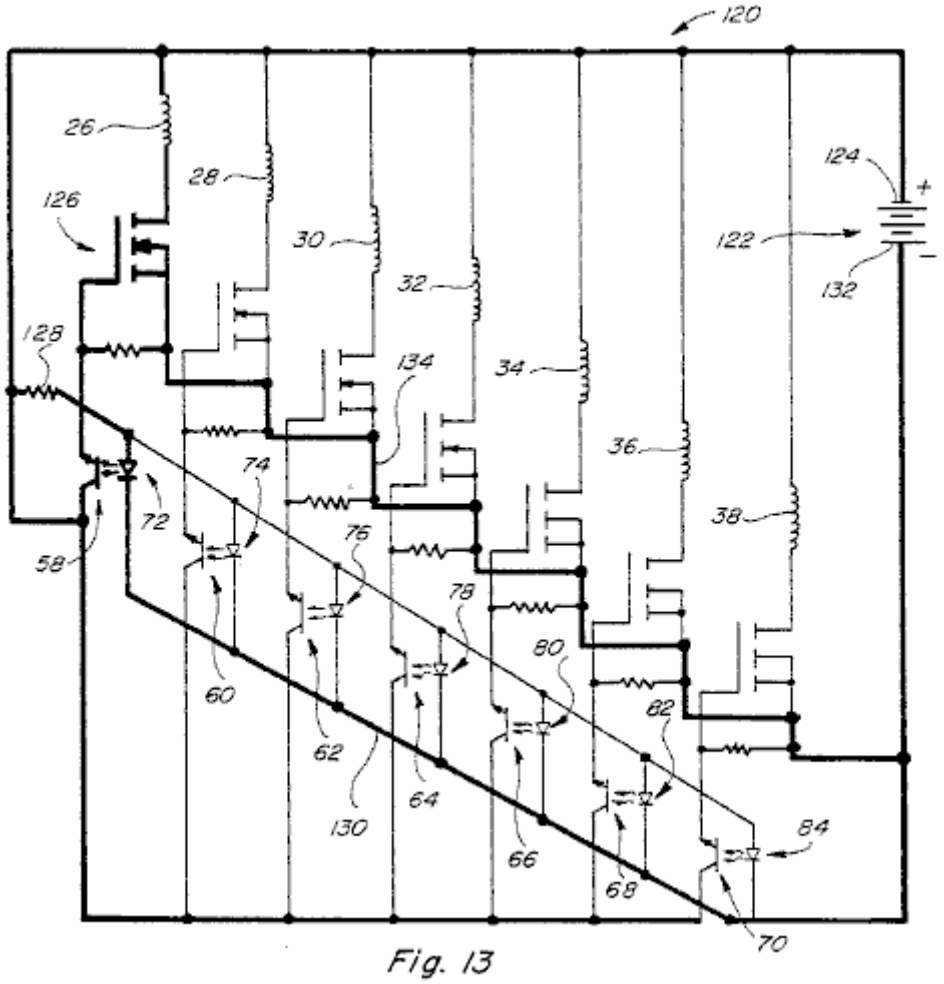

Fig.13 is a schematic circuit diagram of the circuit for the devices of Figs. 1, 7 and 12.

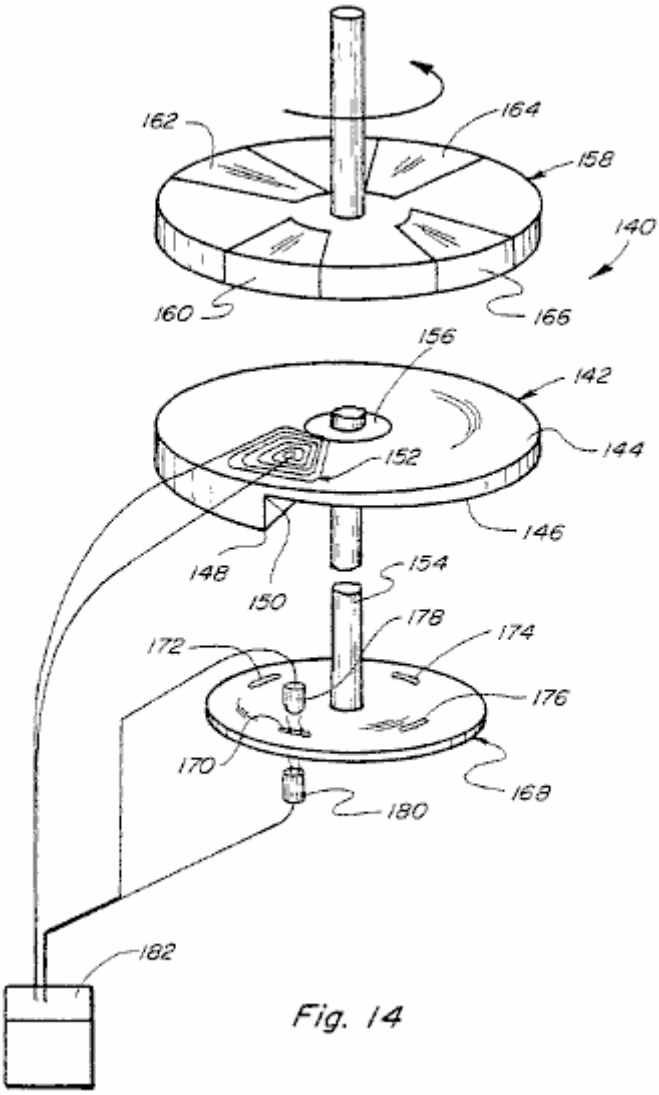

Fig. 14

Fig.14 is a perspective view of another embodiment.

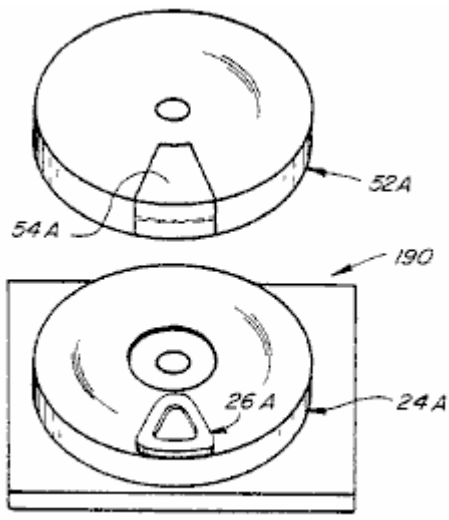

Fig. 15

Fig.15 is a simplified embodiment of the device showing the use of one rotating magnet and one coil positioned in the plane between the rotating and stationary magnets.

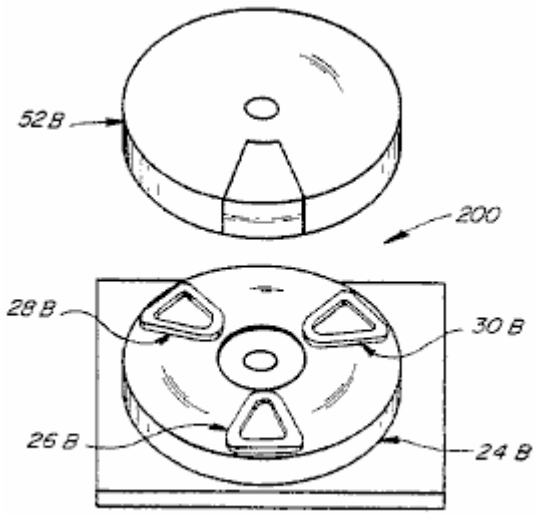

Fig. 16

Fig.16 is a simplified embodiment of the device showing use of one movable magnet and three coils arranged to be in a plane between the rotating and stationary magnets.

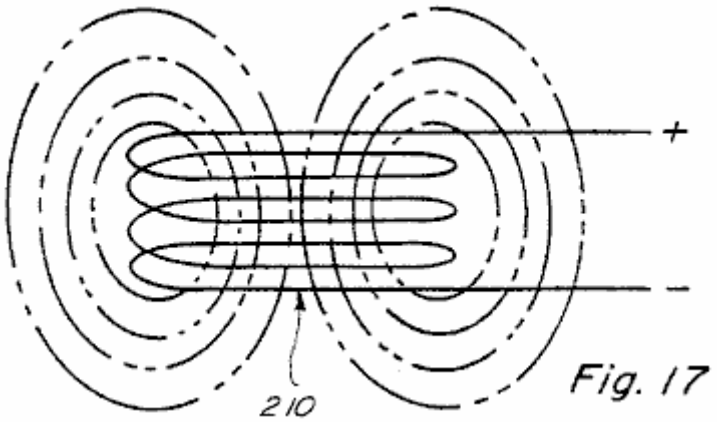

Fig. 17

Fig.17 is a side view of an air coil with a voltage applied across it and showing in dotted outline the field of the coil.

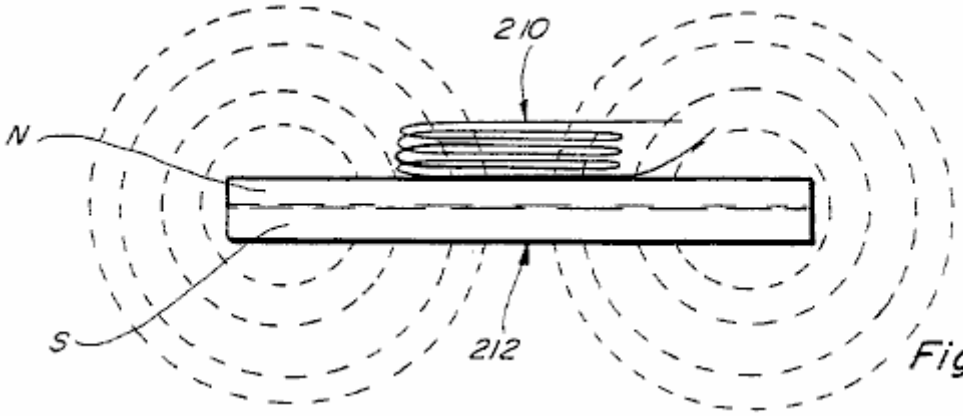

Fig. 18

Fig.18 is a view similar to Fig.17 but showing the air coil positioned adjacent to one side of a permanent magnet showing in dotted outline the magnetic field of the permanent magnet with no electric potential applied across the air coil.

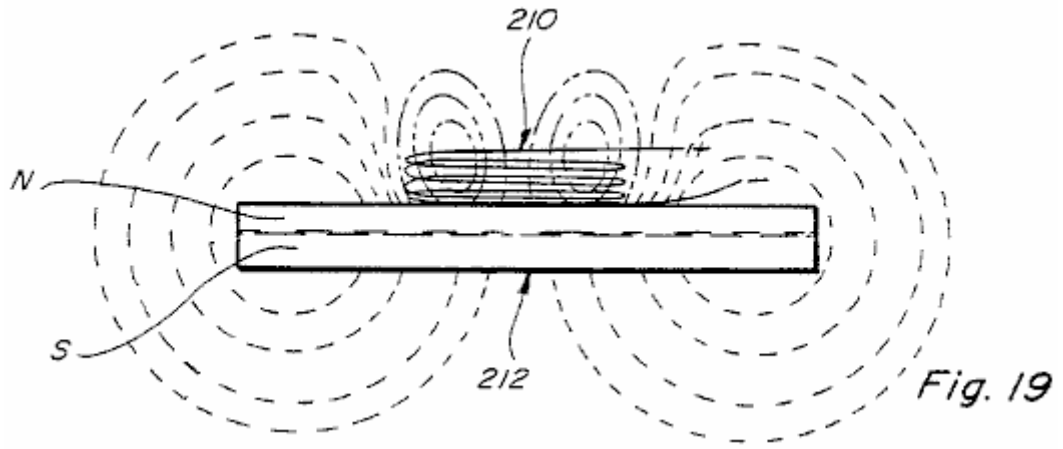

Fig.19 is a side view similar to Fig.18 with an electric potential applied across the air coil, showing in dotted outline the shapes of the electric field of the air coil and the magnetic field of the permanent magnet.

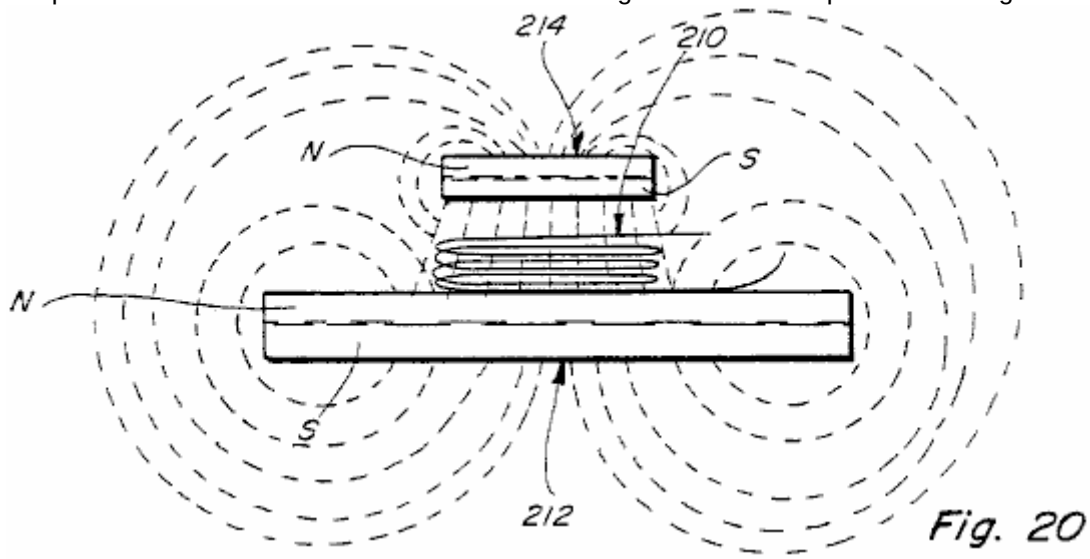

Fig.20 is a side view similar to Fig.19 but showing a second permanent magnet positioned above the first permanent magnet and showing in dotted outline the magnetic fields of the two permanent magnets when no electric potential is connected across the air coil.

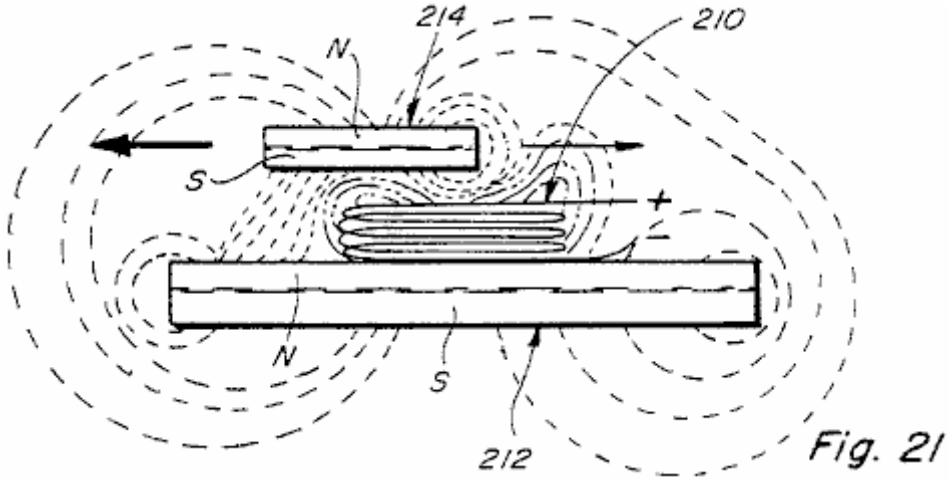

Fig.21 is a view similar to Fig.20 but with the permanent magnets in an different relative position and with a voltage applied across the air coil, said view showing the shapes of the electro-magnetic field of the air coil and the modified shapes of the magnetic fields of the two permanent magnets; and

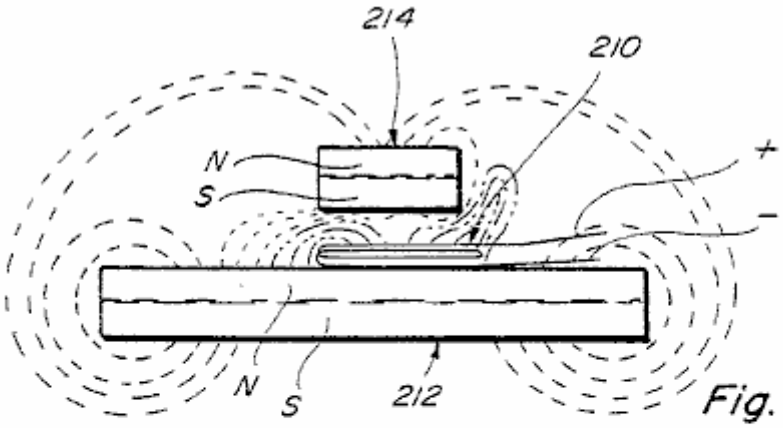

Fig. 22

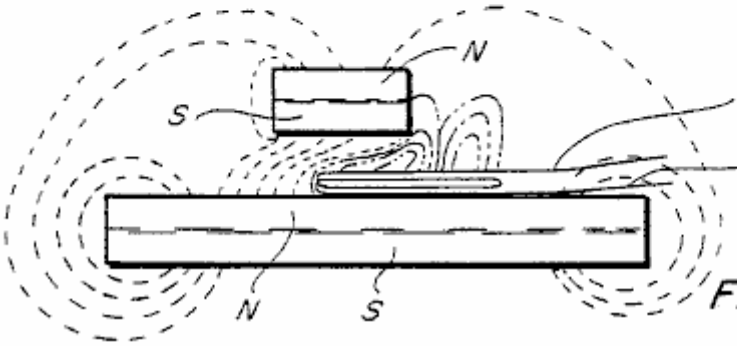

Fig. 23

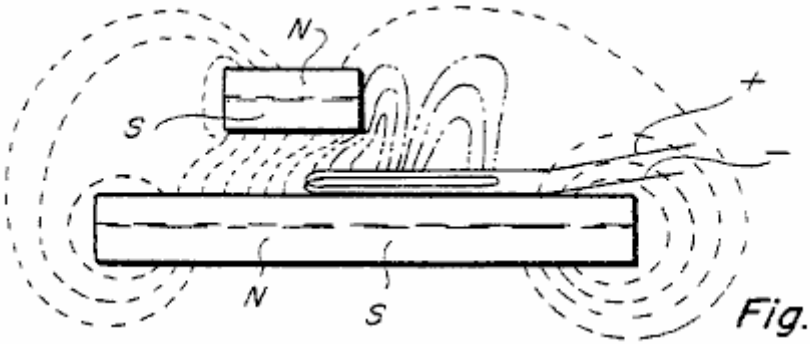

Fig. 24

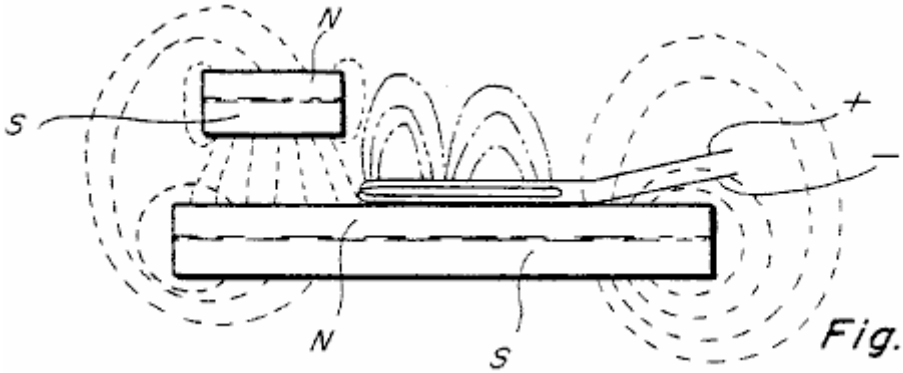

Fig. 25

Fig.22 to **Fig.25** are similar to Fig.21 and show the electro-magnetic field of the air coil and the magnetic fields of the magnets in four different relative positions of the permanent magnets.

DETAILED DESCRIPTION

In the drawings, the number **10** refers to a device constructed according to the present invention. The device **10** includes a stationary base structure including an upper plate **12**, a lower plate **14**, and spaced posts **16-22** connected between them.

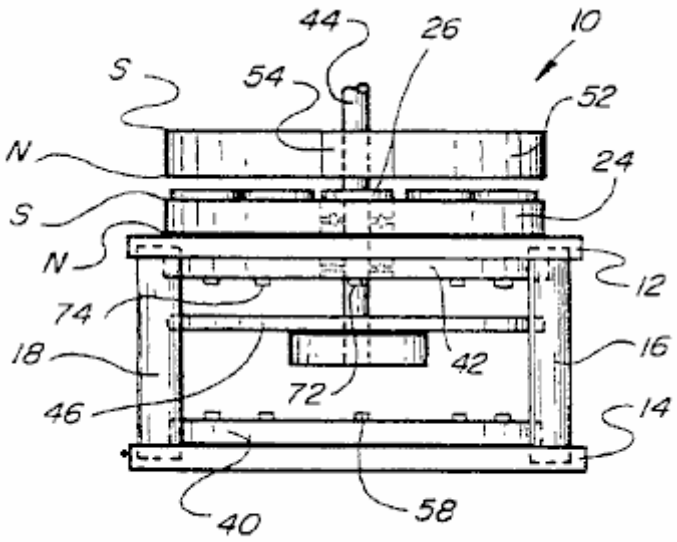

Fig. 1

Mounted on the upper plate **12** is a fixed permanent magnet **24** shown annular in shape which has its North pole adjacent to the upper surface of plate **12** and its South pole facing away from plate **12**.

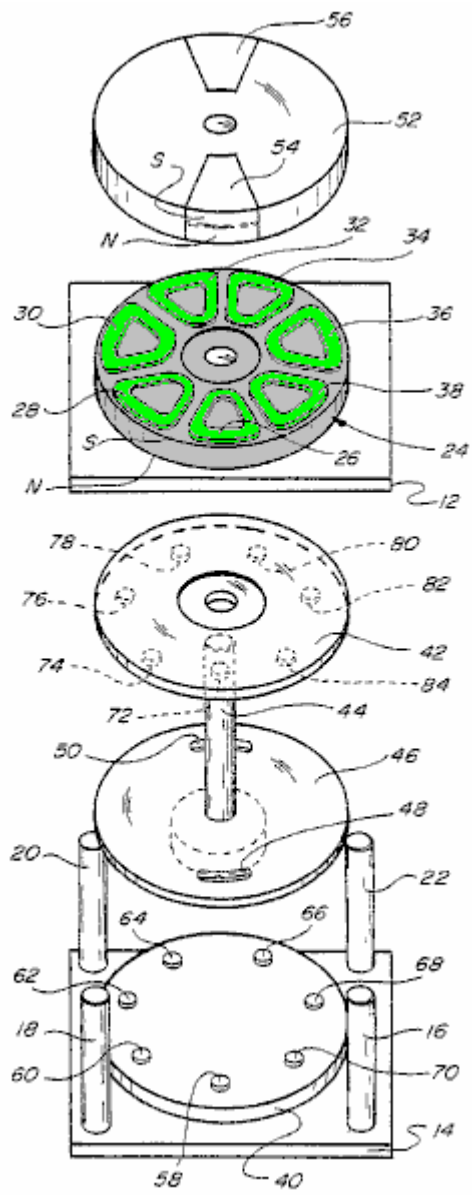

Fig. 2

Referring to **Fig.2**, the permanent magnet **24** is shown having seven coils **26-38** mounted flat on its upper surface. Seven coils are shown, and the coils **26-38** have electrical connections made through plate **12** to other circuit members which will be described later in connection with **Fig.13**. Another member **40** is mounted on the upper surface of the lower plate **14** and a similar member **42** is mounted on the underside of the plate **12**.

A shaft **44**, (shown oriented vertically for convenience) extends through aligned holes in the members **42**, **12** and **24**. The lower end of shaft **44** is connected to disk **46** which has a pair of curved openings **48** and **50** shown diametrically opposite to each other, a little in from the edge of disc **46**. The purpose of these openings **48** and **50** will be explained later on.

Shaft **44** is also connected to another disc **52** which is located on the shaft so as to be positioned adjacent to the coils **26-38**. Disc **52** has a pair of permanent magnets **54** and **56** mounted on or in it positioned diametrically opposite to each other. Magnets **54** and **56** have their north and south poles oriented as shown in **Fig.2**, that is with north poles shown on their lower sides and their south poles on the upper sides. This is done so that there will be mutual magnetic attraction and coupling between the magnets **54** and **56** and the fixed magnet **24**. The polarity of the magnets **54** and **56** and/or of the magnet **24** can also be reversed if desired for some purposes to produce relative magnetic repulsion between them.

Referring again to **Fig.2**, the lower plate **40** is shown having a series of phototransistors **58-70** mounted on its upper surface and spaced out as shown. These phototransistors are positioned under the centres of the coils **26-38** which are mounted on magnet **24**. An equal number of infra red emitters **72-84** are mounted on the under surface of the member **42** aligned with the phototransistors. There are seven infra red emitters **72-84** shown, each of which is in alignment with a respective one of the seven phototransistors **58-70** and with one of the seven coils **26-38**. This arrangement is such that when the shaft **44** and the components attached to it, including discs **46** and **52**, rotate relative to the other members including magnet *24*, the curved openings **48** and **50** pass under the infra red emitters and cause the phototransistors to switch on for a predetermined time interval. This establishes a sequence of energised circuits which powers coils **26-38**, one at a time, which in turn, causes a momentary interruption of the magnetic interaction between one of the permanent magnets **54** and **56** and magnet **24**.

When a coil is mounted on top of a permanent magnet such as permanent magnet **24** and energised it acts to concentrate the flux in a symmetrical magnetic field resulting in a non-symmetrical field when another permanent magnet is above the coil on magnet **24**. This results in uneven or non-uniform forces being produced when the coil is energised and this causes a torque between the two permanent magnets, which tries to move one of the permanent magnets relative to the other.

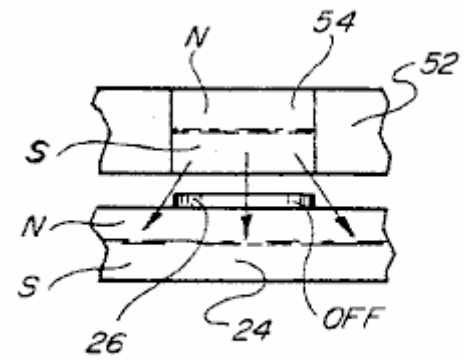

Fig. 3

Fig.3 shows the position when one of the magnets **54** is located immediately above one of the coils, say, coil **26**. In this position there would be magnetic coupling between the magnets **54** and **24** so long as there is no voltage across the coil **26**. However, if a voltage is placed across the coil **26** it will interrupt the magnetic coupling between the magnets **54** and **24** where the coil is located. This means that if there is any torque developed, it will be developed to either side of the coil **26**. Without energising the coil **26** there will be full attraction between the magnets **24** and **54** and no rotational force will be produced.

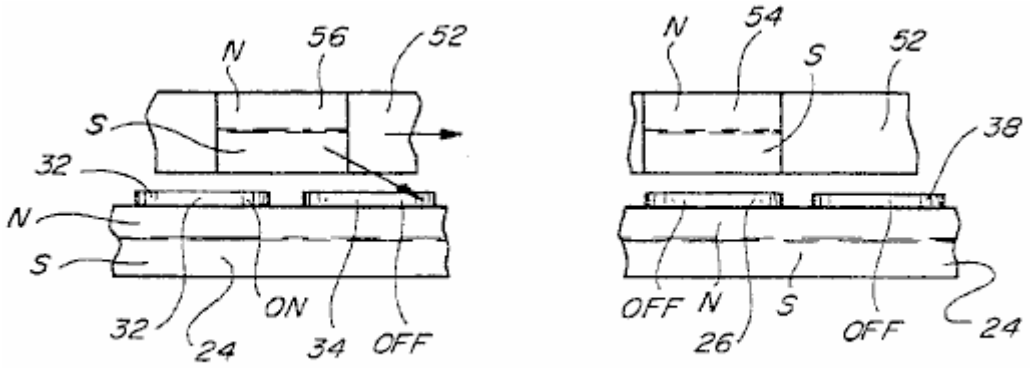

Fig. 4

Referring to **Fig.4** there is shown the relative positions of the movable magnets **54** and **56** for one position of disc **52**. For example, the magnet **54** is shown located immediately above the coil **26** while the magnet **56** is shown straddling portions of the coils **32** and **34**. If, in this position, coil **32** is energised but coils **34** and **26** are not energised, then the magnetic coupling between magnet **56** and magnet **24** will be oriented at an angle shown illustrated by the arrow in **Fig.4**, and this attractive coupling will tend to move disc **52** to the right. Since coil **26** is not powered up, there is full coupling between magnet **54** and magnet **24** but this has no effect since it does not have a directional force. At the same time, coil **38** which is the next coil over which the magnet **54** will move, is also not powered up and so it will have no rotational effect on disc **52**.

As disc **52** continues to rotate, different coils in the group **26-38** will be energised in sequence to continue to produce a rotational magnetic coupling force between disc **52** and magnet **24**. It should be noted, however, that all of the rotational force is produced by interaction between the permanent magnets and none of the rotational force is produced by the coils or by any other means. The coils are merely energised in sequence to control where the magnetic interaction occurs, and this is done in a manner to cause disc **52** to rotate. It should also be understood that one, two, or more than two, permanent magnets such as the permanent magnets **54** and **56** can be mounted on the rotating disc **52**, and the shape and size of the rotating disc **52** can be adjusted accordingly to accommodate the number of permanent magnets mounted in it. Also, disc **52** can be constructed of a non-magnetic material, the only requirement being that sufficient structure be provided to support the permanent magnets during rotation. This means that disc **52** need not necessarily be constructed to be round as shown in the drawing.

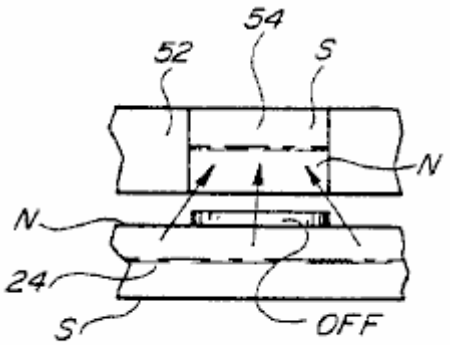

Fig. 5

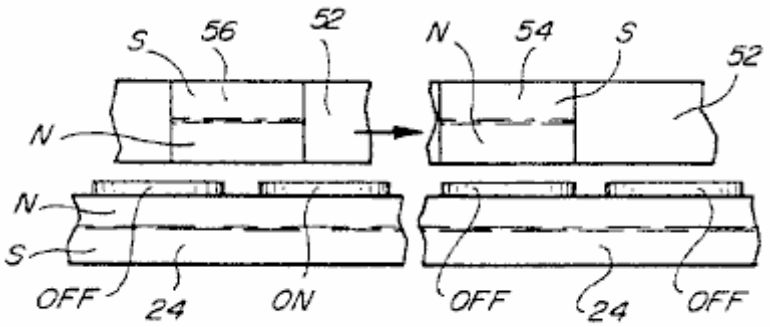

Fig. 6

Fig.5 and **Fig.6** are similar to **Fig.3** and **Fig.4** but show a construction where the permanent magnets **54** and **56** are turned over so that instead of having their north poles facing magnet **24** they have their south poles facing magnet **24** but on the opposite side of the coils such as coils **26-38**. The construction and operation of the modified device illustrated by **Fig.5** and **Fig.6** is similar to that described above except that instead of producing magnetic attraction forces between the magnets **54** and **56** and the magnet **24**, magnetic repulsion forces are produced, and these repulsion forces can likewise be used in a similar manner to produce rotation of the member **52**, whatever its construction.

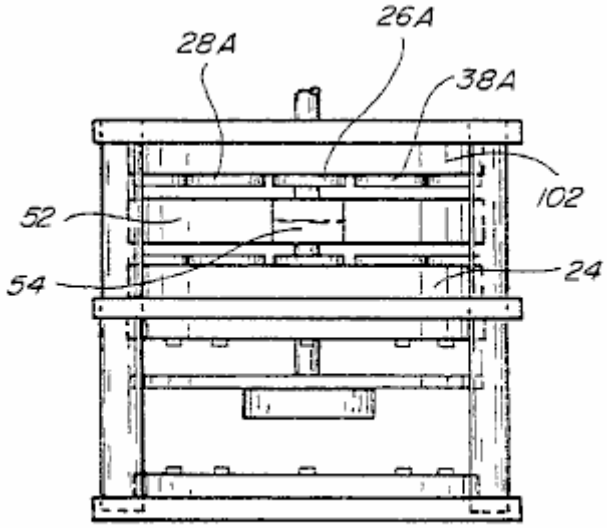

Fig. 7

Fig.7 shows a modified embodiment which includes all of the elements shown in **Fig.1** and **Fig.2** but in addition has a second stationary permanent magnet **102** which is mounted above rotating disc **52** and has its coil members such as coil members **26A-38A** mounted on its underside. Magnet **102** operates with the magnets **54** and **56** similarly to the magnet **24** and can operate in precisely the same manner, that is by producing attraction force between the magnet members or by producing repulsion forces between them, each being used to produce relative rotational movement between the rotor and the stator. It is also contemplated to make the construction shown in **Fig.7** so as to produce attraction forces between the magnets **54** and **56** on one side thereof and cooperating repulsion forces which add to the rotation generating forces produced on the opposite side.

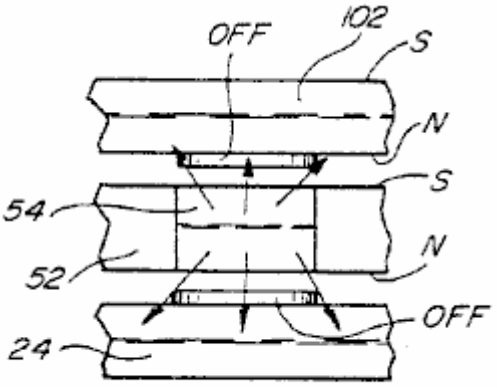

Fig. 8

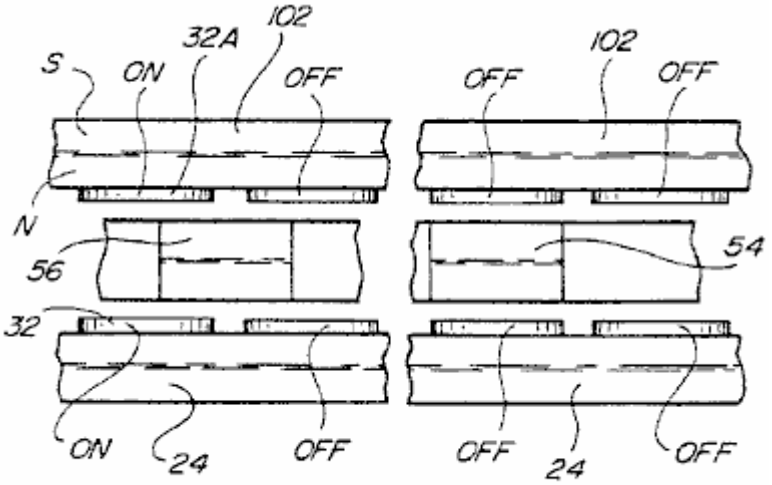

Fig. 9

Fig.8 and **Fig.9** are similar to **Fig.3** and **Fig.4** but show the relationship between the magnets **54** and **56** and the members **24** and **102** located on opposite sides. These figures show one form of interaction between the rotating magnets **54** and **56** and the stationary magnets **24** and **102** located as shown in **Fig.7**. In this construction, the device produces attractive rotating force only.

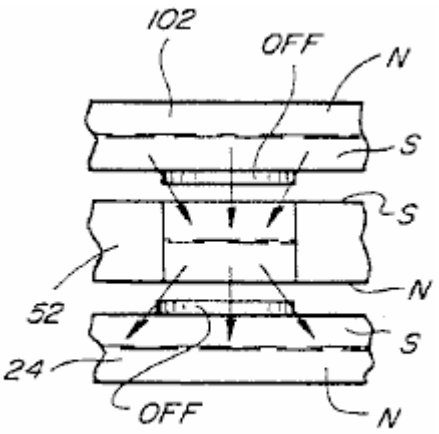

Fig. 10

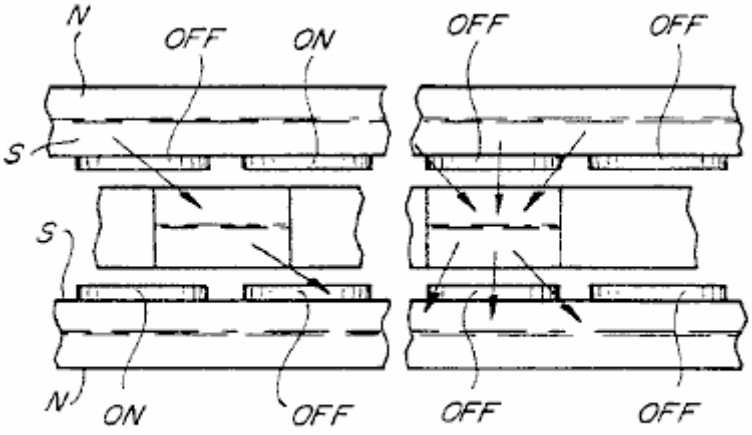

Fig. 11

Fig.10 and **Fig.11** are similar to **Fig.8** and **Fig.9** except that in these figures both attraction and repulsion forces are shown being produced in association with the stationary magnets on opposite sides of the rotating magnets. Note also that the coils being energised on opposite sides of disc **52** are energised in a different arrangement.

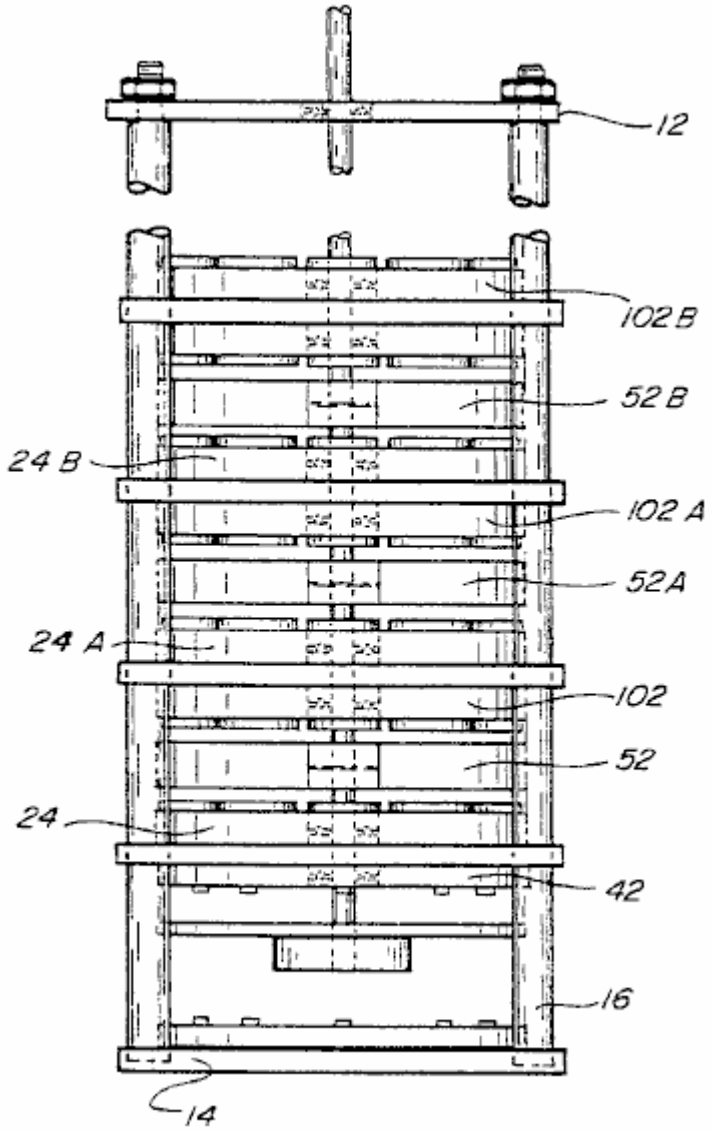

Fig. 12

Fig.12 is a side view similar to **Fig.7** but showing the way in which several stationary and rotating magnetic members such as the discs **24** and **102** can be mounted on the same shaft, in almost any number of repeating groups to increase the amount of torque produced by the device. In **Fig.12**, the same power source and the same circuit arrangement can be used to energise the phototransistors and the infra red emitters. However, depending upon whether attraction or repulsion forces are used to produce the rotation or some combination of

them, will depend upon the order in which the coils associated with the stationary magnetic members are energised.

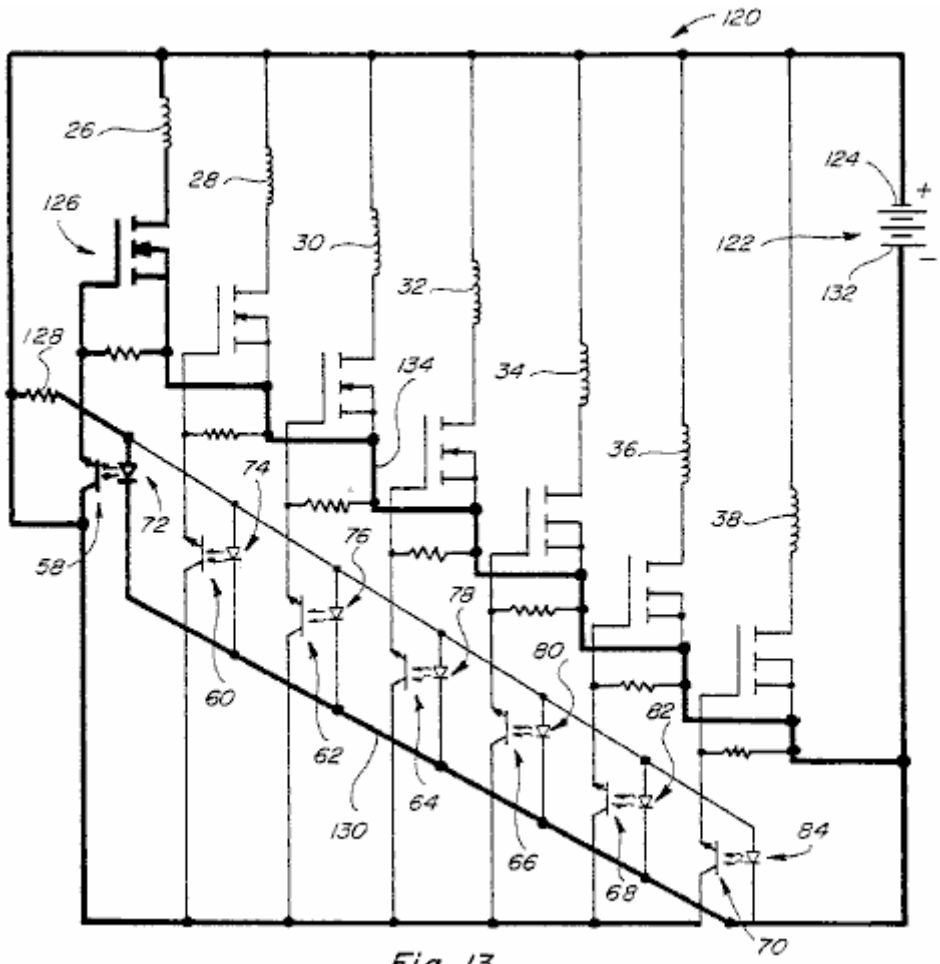

Fig. 13

Fig.13 is a circuit diagram for the device shown in **Fig.1** and **Fig.2**, showing the circuit connections for the coils **26-38** and for the circuit elements associated with them. A similar circuit can be used for the construction shown in **Fig.7** and **Fig.12**. The circuit also includes connections to the various phototransistors and infra red emitters.

In **Fig.13**, the circuit **120** is shown including a power supply **122** which may be a battery power supply, a rectified AC power supply or an AC or pulsed power supply. The positive side **124** of the power supply **122** is shown connected to one side of each of the coils **26-38**, coil **26** and the circuits associated with it being shown in bold outline and including connections to one side of a resistor **128** and to one side of the photo transistors **58-70**. The opposite side of the coil **26** is connected to one terminal of MOSFET **126**. The opposite side of the resistor **128** is connected to one side of the infra red emitter **72**, as well as to the corresponding sides of all of the other infra red emitters **74-84**. The opposite sides of the infra red emitters **72-84** are connected by lead **130** to the negative terminal side **132** of the power supply **122**. With the circuit as shown, the infra red emitters **72-84** are all continuously energised and produce light which can be detected by the respective phototransistors **58-70** when one of the openings **48** or **50** passes between them. When this happens, the respective phototransistor **58** will conduct and in so doing will apply positive voltage on the associated MOSFET **126**, turning the MOSFET on, and causing the voltage of the source **122** to also be applied across the coil **26**. The circuit for this is from the source **122** through the coil **26**, through the MOSFET **126** to and through the lead **134** to the opposite side of the source **122**. When the supply voltage is applied across the coil **26**, it operates to limit or prevent magnetic communication between whichever one of the magnets **54** or **56** happens to be positioned adjacent to the coil **26** which is in the space between that magnet **54** or **56** and the magnet **24**. This circuit is shown in bold in **Fig.13**. By properly timing and controlling the application of voltage to the various coils **26-38** in the manner described, the magnetic coupling between the magnets **54** and **56** and the magnet **24** can be accurately controlled and cause angular magnetic attraction between the magnet **54** (or **56**) and magnet **24**, which angular attraction (or repulsion) is in a direction to cause rotation of the rotating parts of the structure shown in **Figs. 1**, **2**, **7** and **12**. It should be understood that each of the coils **26-38** will be controlled in the same manner, that is, will have a voltage appearing across it at the proper time to control the direction of the magnetic coupling in a manner to produce rotation. The rotating portions will continue to rotate and the speed of rotation can be maintained at any desired speed. Various means can be used to control the speed of rotation such as by controlling the timing of

the DC or other voltage applied to the various coils, such as by using an alternating or pulsed current source instead of a direct current source or by loading the device to limit its rotational speed.

It is especially important to note that the energy required to operate the subject device is minimal since very little electrical energy is drawn when voltage is applied across the various coils when they are energised.

A well known equation used for conventional motor art, is:

Power (in watts) = Speed x Torque / 9.55

Hence,

W = S x T / 9.55

This equation has limited application to the present device because in the present device the torque is believed to be constant while the speed is the variable. The same equation can be rewritten:

T = 9.55 x W / S or S = 9.55 X W / T

These equations, if applicable, mean that as the speed increases, the watts divided by the torque must also increase but by a factor of 9.55. Thus if torque is constant or nearly constant, as speed increases, the power output must increase and at a very rapid rate.

It should be understood that the present device can be made to have any number of stationary and rotating magnets arranged in stacked relationship to increase the power output, (see **Fig.12**) and it is also possible to use any desired number of coils mounted on the various stationary magnets. In the constructions shown in **Figs. 1**, **7**, and **12** seven coils are shown mounted on each of the stationary magnets but more or fewer coils could be used on each of stationary magnet depending upon the power and other requirements of the device. If the number of coils is changed the number of light sources and photo-detectors or transistors will change accordingly. It is also important to note that the timing of the turning on of the various phototransistors is important. The timing should be such as that illustrated in **Fig.4**, for example, when one of the coils such as coil **32** is energised to prevent coupling in one direction between magnet **56** and magnet **24**, the adjacent coil **34** will not be energised. The reasons for this have already been explained.

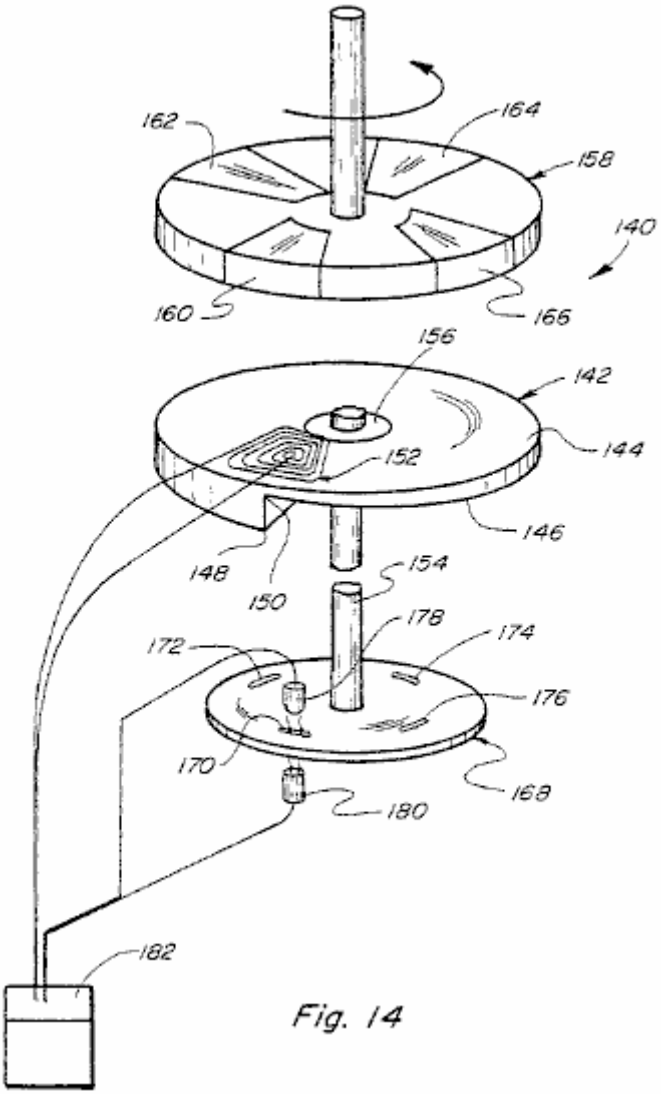

Fig. 14

Fig.14, shows another embodiment **140** of this motor. This includes a stationary permanent magnet **142** which has a flat upper surface **144** and a lower surface **146** that is circumferentially helical so that the member **142** varies in thickness from a location of maximum thickness at **148** to a location of minimum thickness at **150**. The thickness of the member **142** is shown varying uniformly. Near the location of the thickest portion **148** of the permanent magnet **142** and adjacent to the surface **144** is an air coil **152** shown formed by a plurality of windings. A shaft member **154** is journaled by the bearing **156** to allow rotation relative to the stationary permanent magnet **142** and is connected to a rotating disc **158**. The disc includes four spaced permanent magnets **160**, **162**, **164** and **166** mounted on or in it. The permanent magnets **160-166** are positioned to rotate close to the stationary permanent magnet **142** but with the coil **152** positioned between them. Coil **152** is connected into a circuit similar to that shown in **Fig.13** and so the circuit will not be described again.

The principals of operation of the device **140** shown in **Fig.14** are similar to those described above in connection with **Fig.1** and other figures. It is important to note, however, that the permanent magnets **160-166** rotate relative to the permanent magnet **142** because of the increasing coupling between them and the permanent magnet due to the increasing peripheral thickness of the permanent magnet. Thus the member **158** will rotate in a counter-clockwise direction as shown, and each time one of the magnets **160-166** moves into a position adjacent to the thickest portion **148** of the fixed permanent magnet **142** the coil **152** will have voltage applied across it, otherwise there would be a tendency for the member **158** to stop or reduce the rotational force. In order to overcome this the coil **152** is energised each time one of the permanent magnets **160-166** is in the position shown. The rotating disc **158** is connected through the shaft **154** to rotating disc **168** which has four openings **170**, **172**, **174** and **176** corresponding to the locations of the permanent magnets **160-166** so that each time one of the permanent magnets moves to a position adjacent to the thickest portion **148** of the stationary permanent magnet **142** the coil **152** will be energised and this will reduce or eliminate the coupling between the rotating and stationary magnets that would otherwise slow the rotating portions down.

The circuit connected to the coil **152** includes the same basic elements described above in connection with **Fig.13** including varying a photocell **178**, an infra red emitter **180** and a MOSFET **182** connected into a circuit such as

that shown in **Fig.13**. The timing of the energising of the coil **152** is important and should be such that the coil will be energised as the respective permanent magnets **160-166** move to a position in alignment or substantial alignment with the thickened portion **148** of the stationary permanent magnet **142**.

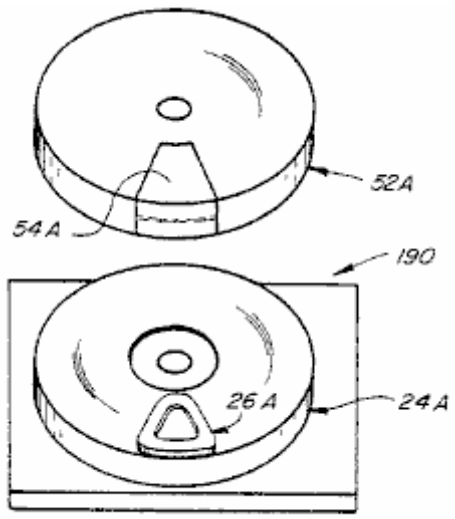

Fig. 15

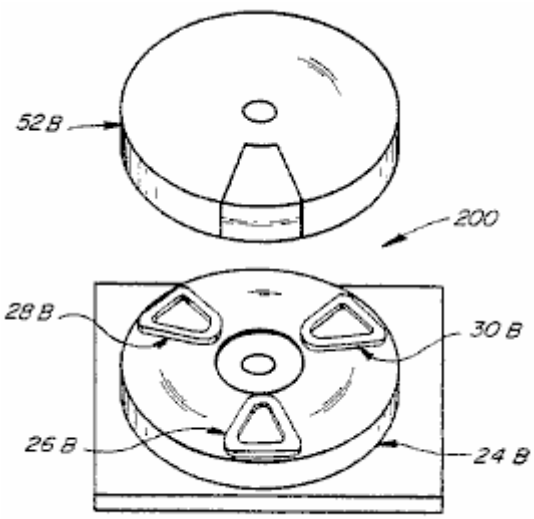

Fig. 16

Fig.15 shows a basic simplified form **190** of the present device which includes a rotary member **52A** having a single permanent magnet portion **54A** mounted on it. The device also has a stationary permanent magnet **24A** with a single air coil **26A** positioned in the space between the members **52A** and **24A** in the manner already described. The construction **190** is not self-starting as are the preferred embodiments such as embodiment **10** but the rotary portions will rotate continuously once the device is started as by manually rotating the rotary portions. The construction **190** will have other portions as described above but the output from the construction will be less than the output produced by the other constructions.

Fig.16 shows another simplified version **200** of the device wherein the member **52B** is similar to the corresponding rotating member **52A** shown in **Fig.15**. However, the fixed structure including the permanent magnet **24B** has three windings **26B**, **28B** and **30B** located at spaced intervals adjacent to the upper surface of it. The construction shown in **Fig.16** will produce more output than the construction shown in **Fig.15** but less than that of the other constructions such as that shown in **Figs. 1**, **2**, **7** and **12**. Obviously, many other variations of the constructions shown in the application are also possible including constructions having more or fewer coils, more or fewer rotating magnetic portions, more or fewer rotating members such as disc **52** and more or fewer stationary members such as magnets **24** and **142**.

Figs.17-25 illustrate some of the underline principles of the present invention.

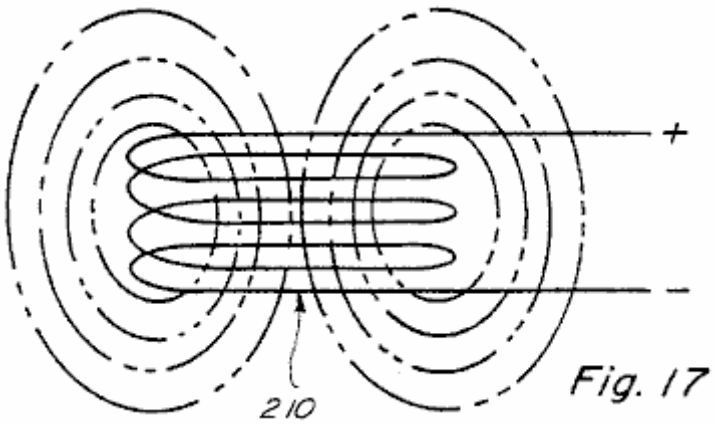

Fig. 17

Fig.17 shows an air coil **210**, positioned in space, with an electric potential applied across it. With the energising voltage applied, the electro-magnetic field of air coil **210** extends substantially equally in the space above and below the coil as shown in dotted outlined.

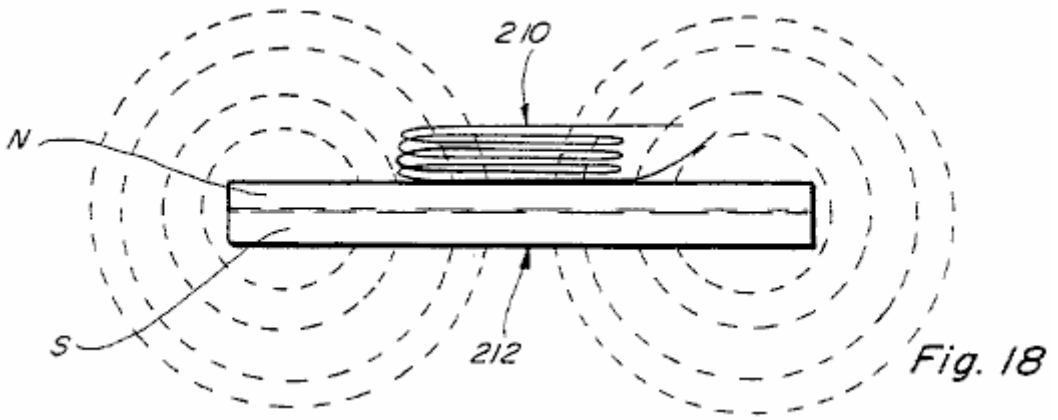

Fig.18 shows the air coil **210** positioned adjacent to one side (the north side) of permanent magnet **212**. In **Fig.18** no voltage is applied across the air coil **210** and therefore the coil does not produce an electro-magnetic field as in **Fig.17**. Under these circumstances, the air coil **210** has no effect on the magnetic field of the permanent magnet **212** and the field of the permanent magnet is substantially as shown by the dotted outlines in **Fig.18**.

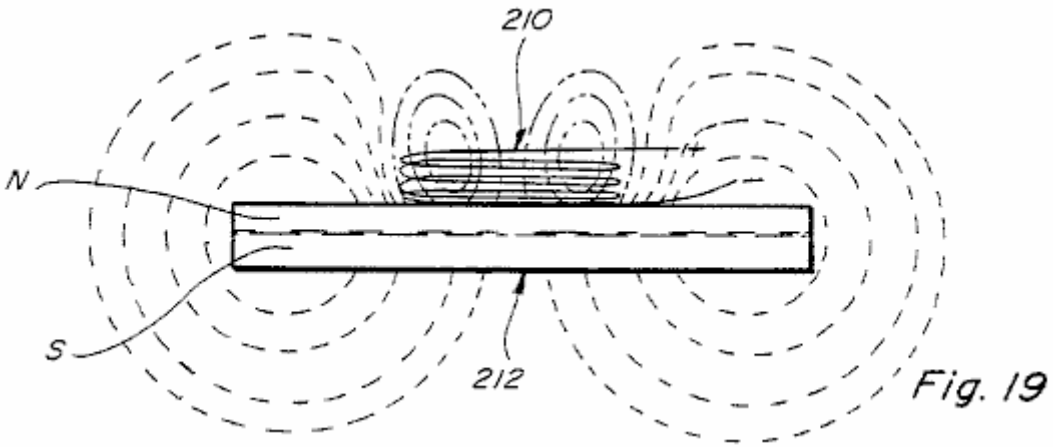

Fig.19 is similar to **Fig.18** except that in **Fig.19** the air coil **210** has an electric potential applied across it and therefore has an established electro-magnetic field shown again by dotted outline.

The electro-magnetic field of the air coil **210** modifies the magnetic field of the permanent magnet **212** in the manner shown. If coil **210** is placed in contact with, or close to the surface of, the permanent magnet and it is energised so that its polarity is opposite to that of the permanent magnet then the field produced is similar to that shown in **Fig.19**. Note that the field of coil **210** and the field of the permanent magnet **212** directly beneath the air coil **210** are in opposition and therefore act to cancel one another. Coil **210** would be defined to produce a counter-magnetomotive force which acts to cancel the field of the permanent magnet **212** in the region where the air coil **210** exists and the amount of the field in that region of the permanent magnet **212** that is cancelled is the remainder of the difference in magnetomotive force between the region of the permanent magnet **212** and the counter magnetomotive force of the air coil **210**. Note that, since the field of permanent magnet **212** is only altered in the region of the air coil **210**, the geometric magnetic field characteristics of the permanent magnet **212** can be altered selectively based upon the size of the coil **210**, the number of air coils **210** and the amount of counter magnetomotive force being produced by the air coil **210**.

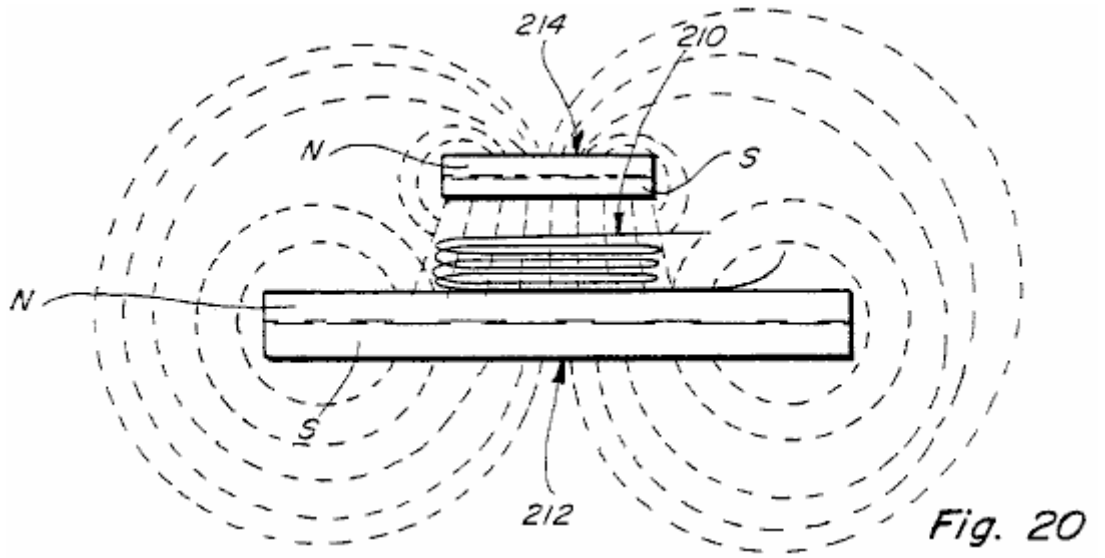

Fig. 20

Fig.20 is similar to **Fig.19** except that a second permanent magnet **214** is positioned at a location spaced above the air coil **210**. In **Fig.20** no voltage is applied across the air coil **210** and therefore the air coil **210** does not have an electro-magnetic field. Thus **Fig.20** shows only the combined affect of the fields of the permanent magnets **212** and **214**. Since the permanent magnets **212** and **214** are positioned so that their respective north and south poles are close together, there will be a strong attractive force between them at the location of the air coil **210**.

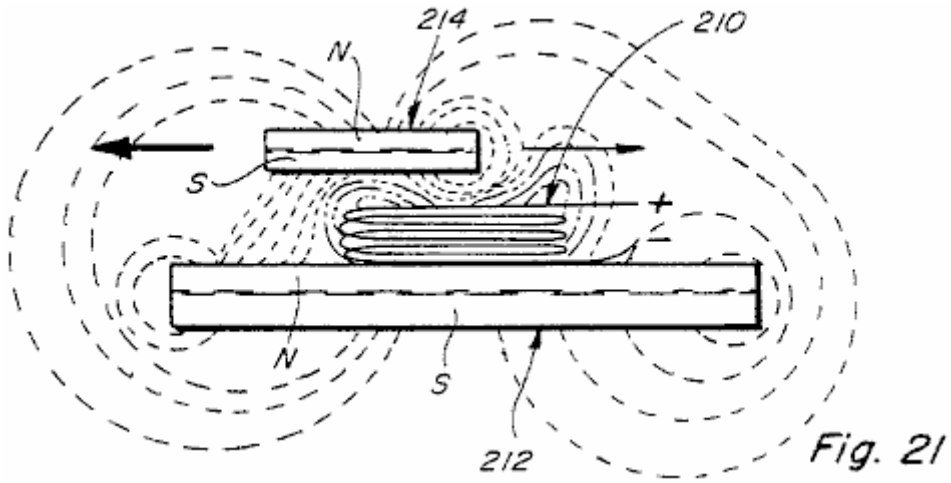

Fig. 21

Fig.21 is a view similar **Fig.20** but with an electric potential applied across the air coil **210** and with the upper permanent magnet **214** displaced to the left relative to its position in **Fig.20**. Note that in **Fig.21** the shape of the electro-magnetic field of the air coil **210** is concentrated and shifted somewhat to the right and upward. This shift of the electro-magnetic field concentrates the magnetic coupling between the magnets **212** and **214** to the left thereby increasing the tendency of the upper permanent magnet **214** to move to the left. A much smaller magnetic coupling occurs between the right end of the permanent magnets **212** and **214** and thus the force tending to move the permanent magnet **214** to the right is much less than the force tending to move it to the left. This is illustrated by the size of the arrows shown in **Fig.21**.

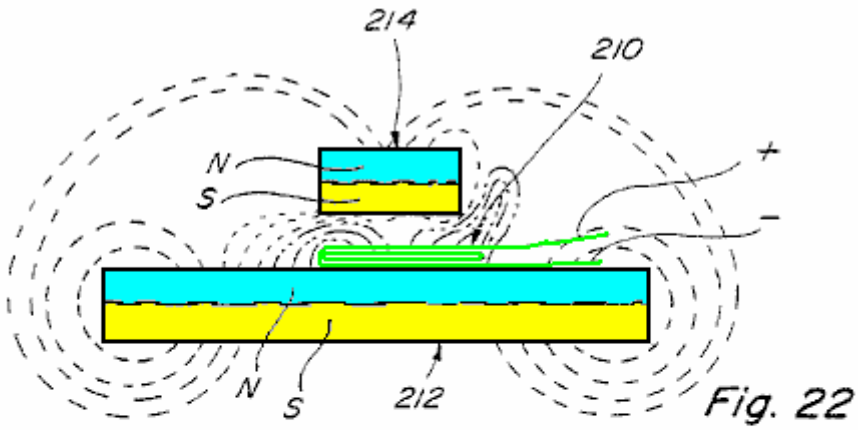

Fig. 22

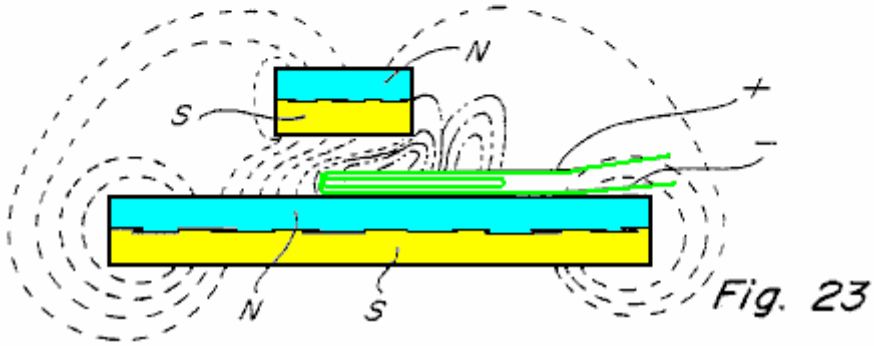

Fig. 23

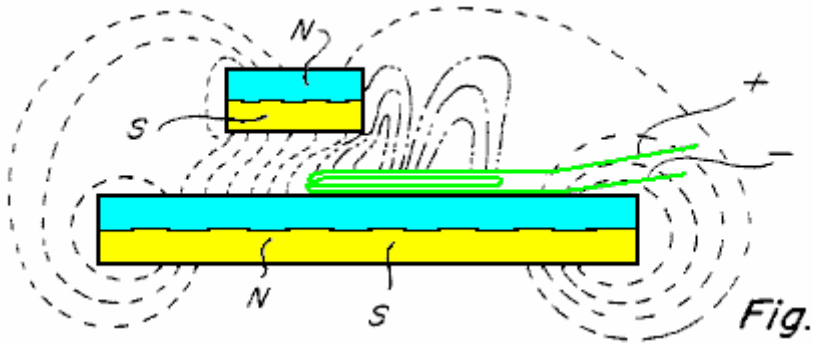

Fig. 24

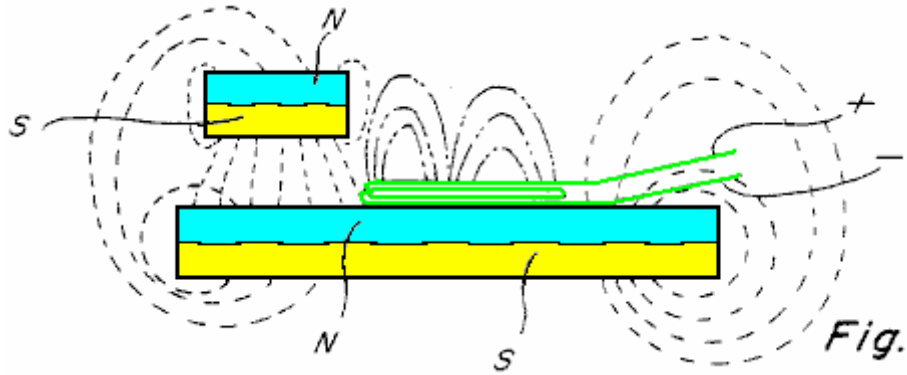

Fig. 25

Figs. 22-25 show four different positions of the upper permanent magnet **214** relative to the lower permanent magnet **212**. In **Fig.22** because of the position of the upper permanent magnet **214** relative to the air coil **210** there is a concentration of the magnetic coupling force tending to move the upper permanent magnet **214** to the left. This force increases in **Fig.23** and **Fig.24** until the upper permanent magnet **214** reaches the position shown in **Fig.25** where all of the magnetic coupling is directed substantially vertically between the permanent magnets **212** and **214** and in this position there is little or no torque as a result of coupling energy between the permanent magnets **212** and **214** tending to move them relative to one another.

The principles illustrated in **Figs. 17-25** are at the heart of the present invention and explain where the energy comes from to produce relative movement between the permanent magnets.

The present device has application for very many different purposes and applications including almost any purpose where a motor or engine drive is required and where the amount of energy available and/or required to produce the driving force may vary little to nil. Applicant has produced devices of the type described herein capable of rotating at very high speed in the order of magnitude of 20,000 RPMs and with substantial torque. Other lesser speeds can also be produced, and the subject device can be made to be self starting as is true of the constructions shown in **Figs. 1**, **2**, **7** and **12**. Because of the low power required to operate the device applicant has been able to operate same using a commercially available battery such as a nine volt battery.

CLAIMS

1. A device to control the magnetic interaction between spaced permanent magnets comprising:

a first permanent magnet having opposite surfaces with north and south poles respectively,

a second permanent magnet spaced from and movable relative to the first permanent magnet and having opposite surfaces with north and south poles respectively, one of which is positioned in close enough proximity to one of the surfaces of the first permanent magnet to produce magnetic interaction between them,

a coil of conductive metal positioned in the space between the first and second permanent magnets,

a source of electrical energy and switch means connected in series therewith across the coil whereby when the switch means are closed the electrical energy from said source is applied across the coil whereby the magnetic interaction between the first and second permanent magnets is changed, and

means to control the opening and closing of the switch means.

2. A device for producing rotational movement and torque comprising:

a member journaled for rotational movement about an axis of rotation, the rotating member having at least a portion adjacent the periphery thereof formed of a permanently magnetized material,

a stationary member formed of permanently magnetized material mounted adjacent to the peripheral portion of the rotating member axially spaced from it whereby a magnetic interaction is produced between the stationary and the rotating members in predetermined positions of the rotating member,

at least one coil positioned extending into the space between the stationary and rotating members,

means including a source of electric potential and switch means connected in series across the coil, and

means to predeterminately control the opening and closing of the switch means during rotation of the rotating member to vary the magnetic interaction in a way to produce rotation of the rotating member.

3. Means to predeterminately vary the magnetic interaction between first and second spaced permanent magnet members comprising a first permanent magnet member having north and south poles, a second permanent magnet member having north and south poles spaced from the first permanent magnet member by a gap between them, a coil positioned extending into the gap between the first and second permanent magnet members, means connecting the coil across a circuit that includes a source of voltage and switch means connected in series therewith so that when the voltage source is connected across the coil it effects the magnetic interaction between the first and second permanent magnet members, and means for mounting the first permanent magnet member for movement relative to the second permanent magnet member and relative to the coil in the gap between them.

4. The device of claim 3 wherein the first and second permanent magnet members are mounted to produce magnetic attraction between them.

5. The device of claim 3 wherein the first and second permanent magnet members are mounted to produce magnetic repulsion between them.

6. The device of claim 3 wherein the means mounting the first permanent magnet member includes means mounting the first permanent magnet member for rotational movement relative to the second permanent magnet member and the switch means includes cooperative optical means having a first portion mounted for

movement with the first permanent magnet member and a second portion associated with the second permanent magnet member.

7. The device of claim 6 wherein the switch means includes a light source and a light sensitive member associated respectively with the first and second permanent magnet members, and control means for them mounted for movement with the first permanent magnet.

8. The device of claim 3 wherein the second permanent magnet member is an annular permanent magnet member having one of its poles on one side of the gap and the other of its poles opposite thereto, means mounting the first permanent magnet member for rotational movement relative to the second permanent magnet member, said first permanent magnet member having one of its poles on one side of the gap, and a plurality of circumferentially spaced coils mounted in the gap between the first and second permanent magnet members.

9. The device of claim 8 wherein the first permanent magnet member includes two circumferentially spaced portions.

10. Means for producing rotational movement comprising:

a support structure having a first permanent magnet mounted thereon, said first permanent magnet having a north pole adjacent one surface and a south pole adjacent to the opposite surface,

means for mounting a second permanent magnet for rotational movement in a plane parallel to the first permanent magnet, the second permanent magnet occupying an curved portion of said mounting means less than the entire circumference of said mounting means and having a north pole adjacent to the opposite surface and positioned so that there is a magnetic interaction between the spaced first and second permanent magnets across a gap between them in at least one position thereof,

at least one air coil positioned in the gap between the first and second permanent magnets,

a source of electric potential and switch means for controlling the application of the electric potential from said source across the air coil, the application of voltage across the air coil effecting the magnetic interaction between the first and second permanent magnet members in certain positions of the second permanent magnet relative to the first permanent magnet and in such a manner as to produce rotational movement of the second permanent magnet.

11. The device for producing rotational movement of claim 10 wherein a third permanent magnet is mounted on the support structure on the opposite side of the second permanent magnet from the first permanent magnet so as to establish a second gap between them and so that there is magnetic interaction between the second and third permanent magnets, and at least one second coil mounted in the gap between the second and third permanent magnets to predeterminately effect the magnetic interaction between them in certain positions of the second permanent magnet relative to the third permanent magnet thereby to contribute to the production of rotational movement of the second permanent magnet member relative to the first and third permanent magnets.

12. The device for producing rotational movement defined in claim 11 wherein the switch means for applying voltage from the source across the coils includes a light source and light sensor one mounted on the support structure and the other on the rotating means to produce a switching action to apply and remove voltage from across the coils in predetermined positions of the second permanent magnet relative to the first and third permanent magnets.

13. Means for producing rotary motion using magnetic energy from permanent magnets comprising:

a fixed permanent magnet having opposite surfaces with north and south poles respectively adjacent thereto,

a shaft having an axis and means journaling the shaft for rotation in a position extending normal to the opposite surfaces of the fixed permanent magnet,

a movable permanent magnet and means mounting the movable permanent magnet on the shaft for rotation therewith, the movable permanent magnet occupying an curved portion of said mounting means less than the entire circumference of said mounting means and having opposite surfaces with associated north and south poles respectively, one pole of said movable permanent magnet being positioned to move in close

enough proximity to one of the opposite surfaces of the fixed permanent magnet to produce magnetic interaction between them,

at least one coil mounted in the space between the fixed permanent magnet and the movable permanent magnet, energising of the coil effecting the magnetic interaction between the fixed and the movable permanent magnets when positioned between them, and

means connecting the coil to a source of energising potential in selected positions of the movable permanent magnet relative to the fixed permanent magnet.

14. The device for producing rotary motion of claim 13 wherein a plurality of coils are mounted in a coplanar relationship in the space between the fixed permanent magnet and the movable permanent magnet, the means connecting the coils to a source of energising potential including means for energising the respective coils in a predetermined sequence.

15. The device for producing rotary motion of claim 13 including a second movable permanent magnet mounted on the means mounting the movable permanent magnet for movement therewith, said second movable permanent magnet being spaced circumferentially from the aforesaid movable permanent magnet.

16. The device for producing rotary motion of claim 13 wherein a second fixed permanent magnet has opposite surfaces with north and south poles respectively adjacent thereto and is mounted on the opposite side of the movable permanent magnet from the aforesaid fixed permanent magnet and at least one coil mounted in the space between the second fixed permanent magnet, and the movable permanent magnet.

17. A device for producing rotary motion defined in claim 13 wherein the means connecting the coil to a source of energising potential includes a fixed light source and a fixed light sensitive member mounted in spaced relationship and means on the mounting means for the movable permanent magnet for predeterminately controlling communication between the light source and the light sensitive member during rotation of the movable permanent magnet.

18. A magnetic motor-like device comprising:

a fixed support structure having a permanent magnet member mounted thereon, said member having opposite side faces with a north magnetic pole adjacent one side face and a south magnetic pole adjacent the opposite side face,

a plurality of coils mounted adjacent to and arranged about one of the opposite side faces,

an orifice through the permanent magnet member at a location intermediate the coils,

a shaft extending through the orifice for rotation about the axis thereof,

a member attached to the shaft for rotation therewith and spaced from the one opposite magnet side faces,

at least one magnet member attached to a segment of said rotating member for rotation therewith, each of said rotating magnetic members having a magnetic pole face positioned in spaced relation to the one opposite pole side face of the fixed permanent magnet member, the plurality of coils being in the space formed by and between the fixed permanent magnet member and the at least one rotating magnet member, and

means to selectively and sequentially energise the coils as the shaft rotates to predeterminately control the magnetic interaction between the at least one magnetic member and that fixed permanent magnet member.

19. The magnetic device of claim 18 wherein there is an odd number of coils mounted in the space between the permanent magnet member and the at least one rotating magnetic member.

20. The magnetic device of claim 18 wherein the at least one magnetic member attached to the rotating member for rotation therewith includes two circumferentially spaced rotating magnet portions.

21. A device for producing rotary motion comprising:

a support structure having a wall member,

a shaft and means journaling the shaft for rotation in the wall member about its axis,

a permanent magnet member mounted on the wall member extending about at least a portion of the shaft, said permanent magnet member having one pole adjacent to the wall member and an opposite pole spaced therefrom,

a member mounted on the shaft having at least two magnetic members oriented to produce magnetic interaction with the permanent magnet member,

a plurality of coils mounted in coplanar relation extending into the space formed by and between the permanent magnet member and the at least two magnetic members and

means to sequentially apply a voltage across the respective coils to vary the magnetic interaction between the permanent magnet member mounted on the wall member and selected ones of the at least two magnetic members.

22. A device for producing rotary motion using magnetic energy from permanent magnets comprising

a fixed permanent magnet having opposite surfaces with north and south poles respectively adjacent thereto,

a shaft and means for journaling the shaft for rotation extending normal to the opposite surfaces of the fixed permanent magnet,

at least two rotatable permanent magnets and means mounting them for rotation with the shaft, the rotatable permanent magnets having opposite surfaces with associated north and south poles respectively, one pole of each rotatable permanent magnet being positioned close enough to one of the opposite surfaces of the fixed permanent magnet to produce magnetic interaction therebetween,

a plurality of spaced coils arranged to be coplanar and positioned in the space formed by and between the fixed permanent magnet and the rotatable permanent magnets, and

means to apply a voltage across respective ones of the coils in a sequence so as to predeterminately affect the interaction between the fixed permanent magnet and the rotatable permanent magnets in a manner to produce rotation of the at least two permanent magnets.

23. A device for producing rotary motion using magnetic energy from permanent magnets comprising:

a fixed annular permanent magnet having a flat surface on one side and an opposite surface of helical shape extending therearound from a location of minimum thickness to a location of maximum thickness approximately adjacent thereto, the annular permanent magnet having one of its poles adjacent to the flat surface and its opposite pole adjacent to the helical opposite surface,

a shaft and means for journaling the shaft for rotation extending substantially normal to the flat surface of the fixed permanent magnet,

a permanent magnet and means mounting it on the shaft for rotation therewith, said permanent magnet having opposite pole faces and being positioned so that there is magnetic interaction between said permanent magnet and the fixed annular permanent magnet,

at least one air coil positioned in the space between the fixed and rotatable permanent magnets, and

means to apply a voltage across the air coil when the rotatable permanent magnet is adjacent to the thickest portion of the fixed permanent magnet to change the magnetic interaction therebetween, said last name means including a source of voltage and switch means in series with the source for controlling the application of voltage across the air coil.

24. The device for producing rotary motion of claim 23 wherein a plurality of rotatable permanent magnets are mounted at circumferentially spaced locations about the shaft for magnetic interaction with the fixed annular permanent magnet, the switch means controlling the application of voltage from the source to the air coil

when one of the rotatable permanent magnets is positioned adjacent to the thickest portion of the fixed annular permanent magnet.

25. The means for producing rotary motion of claim 23 wherein the switch means includes cooperative optical means having a first portion associated with the fixed annular permanent magnet and a second portion associated with the rotatable annular permanent magnet.

The Power Plant of Claude Mead and William Holmes

US Patent 4,229,661 21st October 1980 Inventors: Claude Mead and William Holmes

POWER PLANT FOR CAMPING TRAILER

Note: This patent is not a free-energy patent, but it does provide a suggestion for an integrated and practical system for providing power for people living in a caravan which is frequently off-grid but which occasionally is positioned where electrical mains power is available. It describes a practical system for storing wind energy for high-power electrical power supply, and so is of interest.

ABSTRACT

A power plant for mobile homes, camping trailers, and the like, capable of capturing low-powered wind energy, storing the energy in the form of compressed air, and delivering it on demand in the form of household electrical current. The device comprises a wind turbine which drives an air compressor which feeds a storage tank. When required, the compressed air drives a turbine coupled to an electrical generator. Various pressure regulators are used to control the speed of the generator. The wind turbine is also coupled to an alternator which keeps a bank of batteries charged. A DC motor running on the batteries, is used when necessary, to boost the drive of the air compressor during periods of heavy or long power drain. Provision is made for rapidly recharging the power plant from either a supply of compressed air or from an AC power source.

US Patent References:

2230526	Wind power plant	February, 1941	Claytor	290/44
2539862	Air-driven turbine power plant	January, 1951	Rushing	290/44
3315085	Auxiliary power supply for aircraft	April, 1967	Mileti et al.	290/55
3546474	Electrohydraulic Transmission of Power	December, 1979	DeCourcy et al.	290/1
4150300	Electrical and thermal system for buildings	April, 1979	VanWinkle	290/55

BACKGROUND OF THE INVENTION

The current shortage of fossil fuel and public concern for the quality of the environment have triggered a hurried search for alternate forms of energy. The capture and use of solar energy, and its derivative, wind power, is the object of many new inventions. Due to the inefficiency of the collector device and storage media, use of these forms of energy has been limited to low-power stationery applications. Yet wind power should be adequate for any application requiring very low power or a short, occasional low to medium power supply of energy. These circumstances are encountered, for instance, in a refrigerated railroad car where occasional bursts of power are required to run the refrigerating system in order to maintain a low temperature inside the car. Similar circumstances are found in some mobile housing units such as a camping trailer. There, again, a supply of household current might be necessary for a short time between long periods of travel. In such instances, a system can be devised for accumulating energy generated by a wind turbine powered by the wind or by the air draft created by the motion of the vehicle. It is further desirable that the power system be capable of being replenished from non-polluting energy sources which can be encountered along the travel route.

SUMMARY OF THE INVENTION

It is accordingly an object of the instant invention to provide a novel power plant for mobile homes, and the like, which captures wind energy, stores it in the form of compressed air, and delivers it on demand in the form of household electrical current.

Another object of this invention is to provide a power plant which does not discharge polluting effluents into the atmosphere.

Still another object of the invention is to provide a power plant which can be recharged by capturing the effect of the wind, or the effect of the air stream created by the movement of the vehicle.

A further object of the invention is to provide a power plant which can be recharged from a household current electrical outlet.

It is also an object of this invention to provide a power plant which can be replenished from a source of compressed air such as those found in automotive service stations.

An additional object of the invention is to provide a power plant which is responsive to a very low level of wind energy for a short period of time.

These and other objects are achieved by a power plant which comprises a wind turbine driving an air compressor. The air supply of the compressor is stored in the tank and used on demand to activate a turbine. The turbine, in turn, is coupled to a generator which creates household current. The wind turbine is also coupled to generators which charge a series of electrical batteries. On occasions when the AC power drain requires it, a motor running on the batteries is used to boost the output of the air compressor. Provision is made for driving the compressor from an outside AC power source. The air tank has a separate inlet through which it can be replenished from a source of compressed air.

THE DRAWINGS

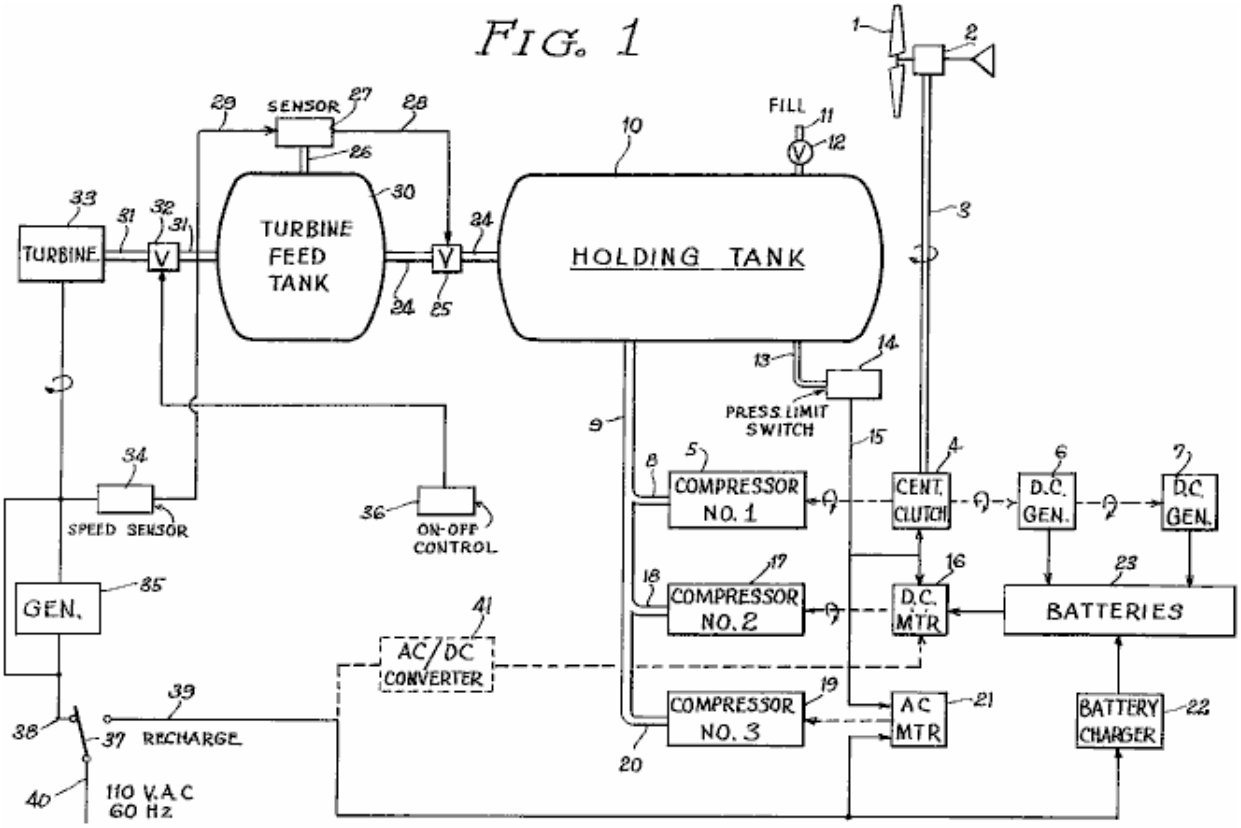

Fig.1 is the general block diagram of the entire power plant;

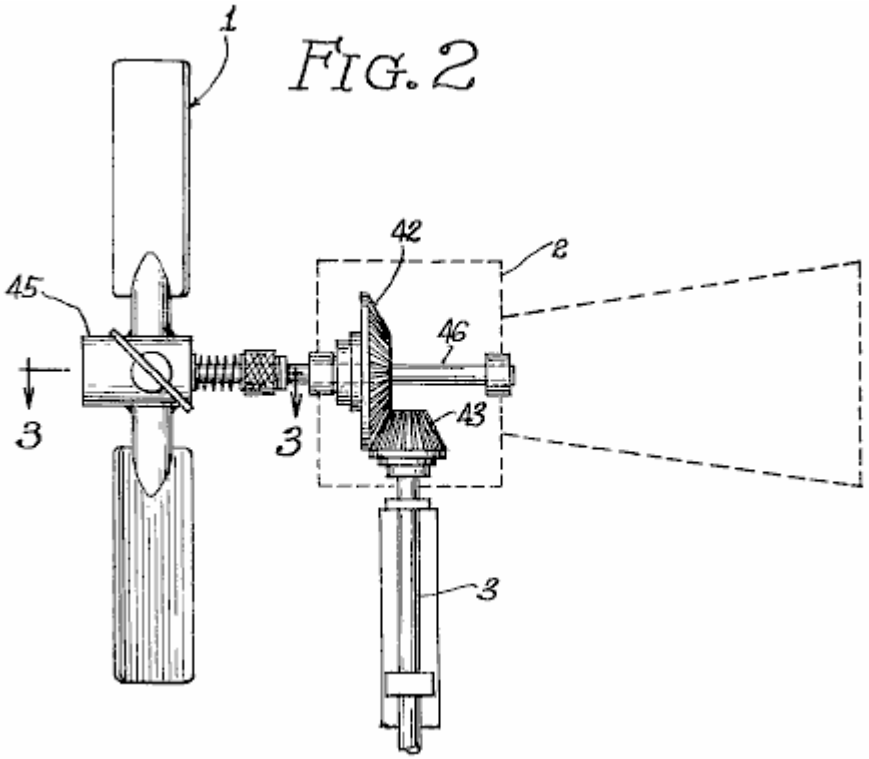

Fig.2 is a front elevation of the wind turbine and of its mechanical coupling to the drive shaft;

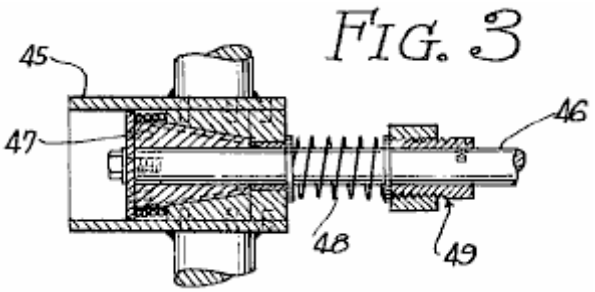

Fig.3 is a cross-sectional view taken along line 3--3 of Fig.2 showing the propeller linkage mechanism in the engaged position;

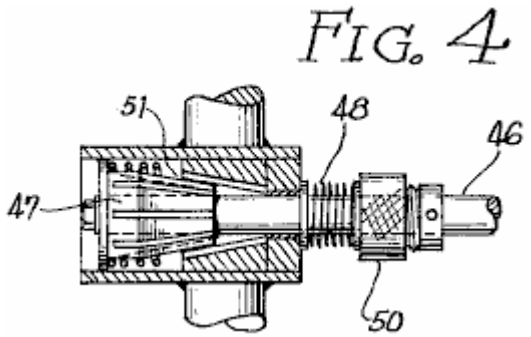

Fig.4 is a view similar to the one illustrated in Fig.3 but showing the propeller linkage mechanism in the disengaged position.

DESCRIPTION OF THE PREFERRED EMBODIMENT OF THE INVENTION

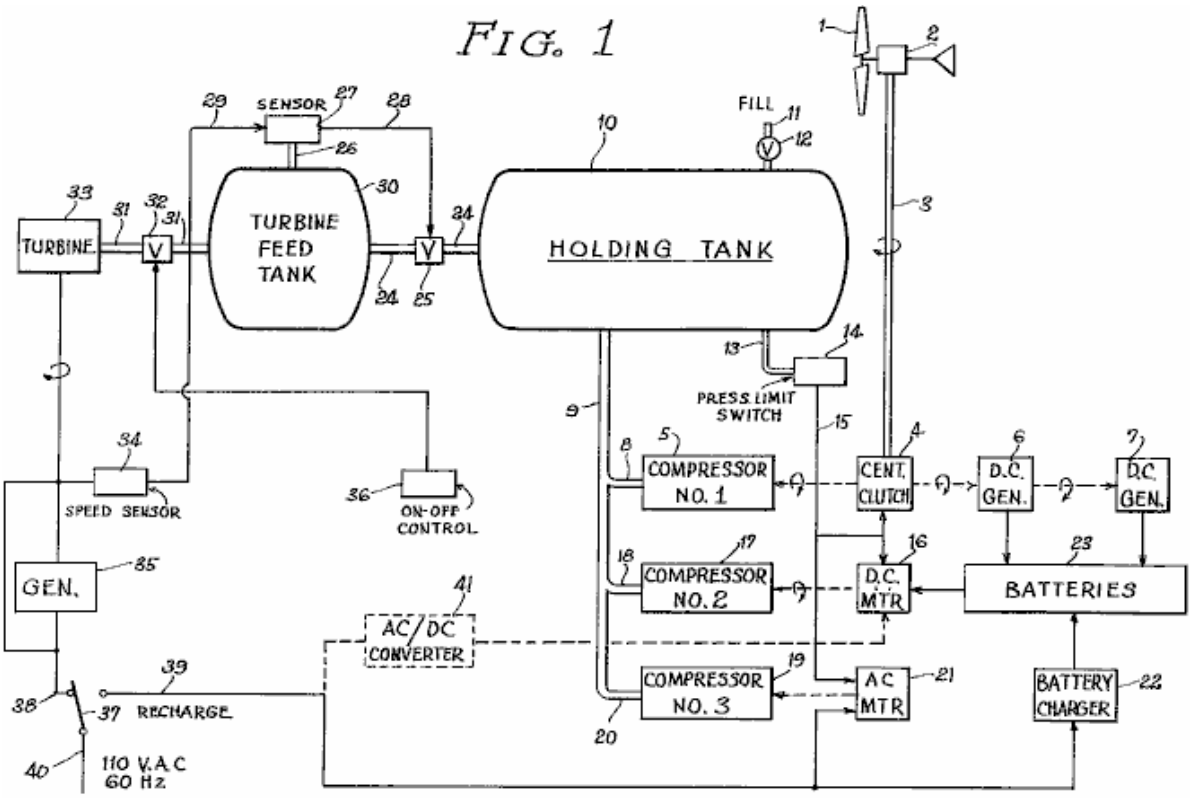

Referring now to **Fig.1**, there is shown a diagramatic representation of the preferred embodiment of the invention. A wind turbine comprising a propeller **1** and an orthogonal coupling assembly **2** drives a shaft **3** connected to a centrifugal clutch **4**. This type of clutch is designed to engage itself when the speed of the drive shaft **3** reaches a certain minimum preset limit. The plate of the clutch is first connected to a compressor **5** and second to two DC generators **6** and **7**. Block **5** represents a adiabatic compressor requiring an input drive of approximately one-fourth horsepower.

The output of the compressors **5** is protected by a check valve and leads into a pipe **8** connected to a tank inlet pipe **9**. The inlet pipe **9** feeds into a holding tank **10** capable of holding sixty gallons of compressed air under a maximum pressure of 200 pounds per square inch. The DC generators **6** and **7** supply a series of electrical batteries **23**. The batteries feed a DC motor **16**. The DC motor is in turn connected to a second compressor **17**. The second compressor **17** is similar to the first compressor **5** and is connected through to pipe **18** to the tank inlet pipe **9**. A third compressor **19** similar to the first and second compressors is also connected to the tank inlet pipe **9** through pipe **20**. The third compressor **19** is powered by an AC motor **21**.

A pressure limit switch assembly **14** senses the pressure in the holding tank through a pipe **13**. A high pressure switch within the assembly **14** is activated when the holding tank reaches the maximum safely allowable pressure. This switch through line **15** causes the disengagement of the clutch **4** and turns off DC motor **16** and AC motor **21**. A second switch within the assembly **14** is activated when the holding pressure falls below a preset limit.

This second switch through line **15** turns on the DC motor **16**. It can now be seen that when the tank pressure is below the lowest limit, both the first and second compressors **15**, **17** will be activated. When the tank pressure goes above the lowest preset limit, only the first compressor **5** will be activated. If the holding tank pressure reaches the maximum tolerable limit all the compressors will be deactivated. The engagement speed of the centrifugal clutch **4** is set to a level corresponding to the minimum power necessary to drive the first compressor **5** and the DC generators **6** and **7**. If the speed of the wind falls below that level, the shaft **3** will be free-running.

The holding tank **10** has a separate inlet **11** protected by a check valve **12**. The holding tank is connected to a turbine feed tank **30** through pipe **24** controlled by valve **25**. The turbine feed tank **30** is connected to the inlet of a turbine **33** through pipe **31** controlled by valve **32**. The turbine **33** is powered by the expansion of the compressed air supplied by the turbine feed tank **30**. The turbine **33** is similar to the compressed air motors used in certain

impactors and drills. The turbine drives an AC generator **35** designed to supply approximately five kilowatts of household current at 60 Hz and 110 volts. The turbine is turned on by means of the valve **32** controlled by an/off switch **36**. The speed of the turbine **33** is determined by the pressure of the air accumulated in the turbine tank **30**. The pressure is monitored by sensor **27** connected to the turbine feed tank **30** by pipe **26**. Sensor **27** contains a set of high and low limits. When the turbine feed tank pressure falls below the low limit, valve **25** is opened through control line **28**. When the pressure in the turbine feed tank **30** reaches the high limit, the valve **25** is closed. The high and low limit of sensors **27** are not fixed but subject to minor variations in response to the speed of the turbine **33**.

The speed of the turbine **33** and of the generator **35** is monitored by speed sensor **34**. The output of the speed sensor **34** is inversely proportional to the speed of the turbine **33**. The speed sensor signal **29** is fed to sensor **27**. If the output frequency of the generator **35** deviates from the required 60 Hz, the high and low limits of the sensor **27** are either increased or decreased. If the speed of the generator is slowed down by an increase in the load current, the high and low limits of sensor **27** are raised in order to raise the pressure in turbine feed tank **30**. The turbine **33** will respond to the pressure change by increasing its rotational speed. The output of the generator **35** is made available for use through lines **38** and **40** controlled by a switch **37**.

The pressure in the holding tank **10** may be boosted from two external sources. First, compressed air may be introduced through inlet **11**. Second, the AC motor **21** may be connected to an external source of electrical energy through lines **39** and **40** controlled by switch **37**. The external electrical source may also be applied to a battery charger **22** which supplies the series of batteries **23**. In an alternate version of the preferred embodiment, it is suggested that an AC/DC converter **41** be used to drive the DC motor **16** from the external electrical supply. In such a case, the AC motor **23** and the third compressor **19** are not necessary.

The power plant just described is primarily designed to be installed on board a camping trailer. This power plant will accumulate wind ("aeolian") energy during the periods when the wind is blowing or the trailer is in motion. The energy is stored in two forms. First, it is stored in the form of compressed air in the holding tank **10**. Second, it is stored in the form of DC current in the series of batteries **23**. Both storage media are ecologically clean. Furthermore, the electrical system can boost the power of the compressed air system during periods of heavy power drain or long use. For added convenience, the system can be refuelled from an external source of electrical energy such as a household outlet or from an external source of compressed air such as those found in service stations for use by vehicle drivers. It should be noted also that this power plant is versatile in that it can be driven not only from the movement of fluids such as air or water, but also from the movement of the vehicle. In the later case, the shaft **3** would be coupled directly to the wheel of the vehicle.

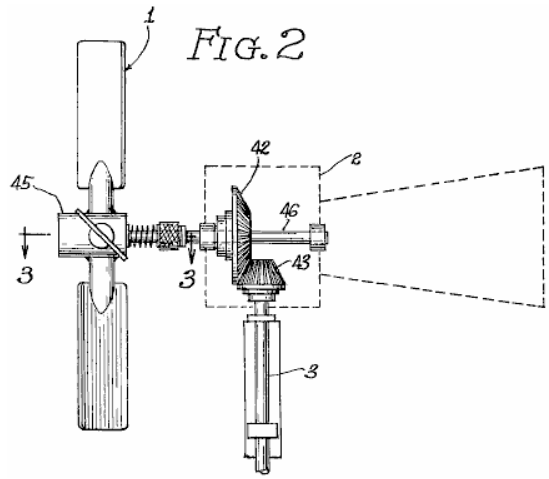

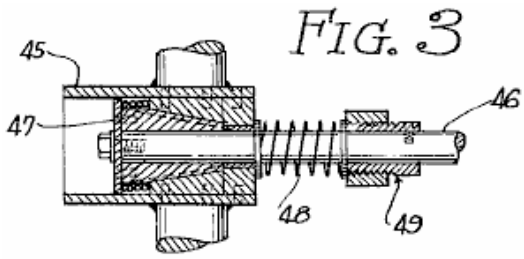

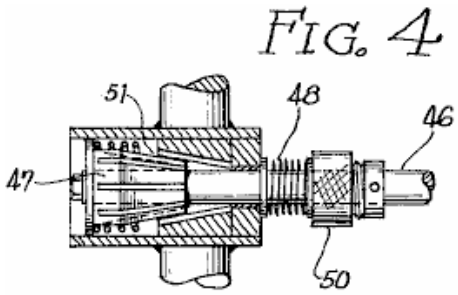

Referring now to **Figs. 2** through **4**, there is shown the details of the propeller **1** and coupling box **2**. The propeller is noticeable by the fact that it is protected against bursts of wind which could damage the equipment. The hub **45** of propeller **1** is mounted on a shaft **46** by means of a conical spindle **46**. The hub has a central cavity **51** matching the outline of the spindle **47**. The hub **45** is held against the spindle by means of a coil spring **48** resting against an adjustable stop **49**. An excess of pressure of the wind against the propeller **1** will cause the hub **45** to be pulled back against the spring **48**, disengaging it from the spindle **47**. At that point the propeller 1 will rotate freely without driving the shaft **46**. The pressure of the coil spring **48** may be adjusted by turning the ring **50** around the threaded base of the stop **49**.

The various mechanical and electro-mechanical components of the power plant such as the centrifugal clutch, compressors, generators, turbines, valves and pressure-activated switches are well known to those skilled in the art.

The speed sensor **34** may be implemented with an electronic integrator whose output signal **29** amplitude is proportional to the frequency of AC generator **35**. The signal **29** is then used to modulate the sensitivity of sensor switches **27**. This technique is also well known to those skilled in the electro-mechanical arts.

Modifications, other than those suggested, can be made to the embodiment of the invention just described without departing from the spirit of the invention and the scope of the appended claims.

CLAIMS

1. A power plant which comprises:

(a) first rotating means responsive to movement of a fluid;
(b) first fluid compressor driven by the first rotating means;
(c) first means for coupling the first rotating means to the first fluid compressor;
(d) first electrical energy generator driven by the first rotating means;
(e) second means for coupling the first rotating means to the first generator;
(f) means for accumulating electrical energy generated by the first generator;
(g) second rotating means responsive to The accumulated energy;
(h) second fluid compressor driven by the second rotating means;
(i) means for storing compressed fluid;
(j) fluid conduit means for connecting the outputs of the first and second fluid compressors to the means for storing;
(k) means responsive to fluid pressure within the means for storing for controlling the operation of the first and second fluid compressors;
(l) third rotating means responsive to the expansion of compressed fluid;
(m) means for connecting the means for storing to the third rotating means;
(n) second electrical energy generator driven by third rotating means; and
(o) means for coupling the third rotating means to the second electrical energy generator.

2. The power plant claimed in claim 1 wherein the means for controlling the operation of the first and second fluid compressors comprise:

(a) first switch means responsive to high pressure for turning off the second rotating means and for inhibiting the first fluid compressor; and
(b) second switch means responsive to lower pressure for turning on the second rotating means.

3. The power plant claimed in claim 2 wherein the means for storing compressed fluid comprise:

(a) a high pressure tank;
(b) a low pressure tank;
(c) first valve means responsive to fluid pressure in the low pressure tank for regulating the flow of fluid from the high pressure tank to the low pressure tank; and
(d) the means for connecting the means for storing to the third rotating means comprise fluid conduit means and second valve means for controlling the flow of fluid.

4. The power plant claimed in claim 3 wherein The means for storing further comprise means responsive to the rotating speed of the third rotating means for controlling the first valve means.

5. The power plant claimed in claim 4 which further comprises:

(a) fourth rotating means responsive to electrical energy;
(b) third fluid compressor driven by the fourth rotating means;
(c) means for coupling the fourth rotating means to the third fluid compressor;
(d) means for connecting the third fluid compressor to the means for storing; and
(e) means for connecting the fourth rotating means to an external electrical energy source.

6. The power plant claimed in claim 4 wherein The means for accumulating comprise at least one electrical storage battery;

a battery charger connected to The battery; and
means for connecting The battery to an external electrical power source.

7. The power plant claimed in claim 1 wherein The first rotating means comprise: Lp1

(a) a rotating shaft;
(b) a conical spindle at one end of the shaft;
(c) a propeller having in its hub a conical hole engaging The spindle;
(d) means for resiliently holding the propeller engaged around The spindle; and
(e) means for adjusting the pressure of the means for holding against the propeller.

8. The power plant claimed in claim 4 wherein the first means for coupling comprise a centrifugal clutch.

9. The power plant claimed in claim 7 installed into a vehicle.

10. The power plant claimed in claim 9 wherein The high pressure tank comprises a means for connecting The tank to an outside source of compressed air;

A means for accumulating electrical energy comprises at least one electrical storage battery;
A second rotating means comprise a DC motor;
A third rotating means comprise a turbine powered by expansion of compressed air;
A second electrical energy generator comprise a generator of household alternating current; and
A means for distributing the household current to the vehicle electrical appliances.

The Motionless Generator of Richard Willis

This patent application covers a device which is claimed to have a substantially greater output power than the input power required to run it and it has no moving parts.

Patent application WO2009065210 (A1) 28th May 2009 Inventor: Richard Willis

ELECTRICAL GENERATOR

ABSTRACT

An electrical generator comprising an induction coil with a first magnet positioned adjacent to the first end of the induction coil so as to be in the electromagnetic influence of the induction coil when it is energised, and for creating a magnetic field around at least the first end of the induction coil. There is also a second magnet positioned near the second end of the induction coil so as to be in the electromagnetic field of the induction coil when the induction coil is energised, and for creating a magnetic field around at least the second end of the induction coil. A power input circuit powers the induction coil. A timer is placed in the power input circuit in order to create electrical pulses and controlling their timing. A power output circuit receives power from the induction coil.

FIELD OF THE INVENTION

The present invention relates to an electrical power generator, and more particularly to an "over-unity" electrical power generator.

BACKGROUND OF THE INVENTION

Electricity is conventionally generated in a number of ways, including fossil fuel powered electromechanical generators, coal powered electromechanical generators, water-flow powered electromechanical generators, nuclear reactor type generators, and so on. In each case, there are a number of disadvantages associated with these methods, especially inefficiency and also the scarcity of a power source.

Recently, magnetic generators have been developed which produce electrical power from the magnetic field of the Earth. Basically, an input magnetic field is quickly switched on and off, or alternatively more than one input magnetic field is selectively switched on and off, on an alternating basis, to influence a larger magnetic field in an electromagnetic apparatus that is selectively connected to an electrical power output circuit. A resulting electrical power is produced in the power output circuit.

There are even magnetic generator circuits which produce more electrical power than that which is applied to the circuit. While this seems to contradict the laws of physics, it docs not, otherwise, such magnetic generator circuits would not work. These magnetic generator circuits work, on the basic principle that the space-time continuum is very energetic, including energy fields such as the Earth's magnetic field.

It should be understood that electric fields and magnetic fields do not have an independent existence. A purely electromagnetic field in one coordinate system can appear as a mixture of electric and magnetic fields in another coordinate system. In other words, a magnetic field can at least partially turn into an electric field, or vice versa.

It is also well known that a system which is far from equilibrium in it's energy exchange with it's environment can steadily and freely receive environmental energy and dissipate it in external loads. Such a system, can have a Coefficient of Performance ("COP") greater than 1. For a COP greater than 1, an electrical power system must take some, or all of its input energy, from it's active external environment. In other words, the system must be open to receive and convert energy from it's external environment, as opposed to merely converting energy from one form to another.

The US Patent 6,362,718 issued on 26th March 2002 to Patrick et at., discloses an electromagnetic generator without moving parts. This electromagnetic generator includes a permanent magnet mounted within a rectangular

ring-shaped magnetic core having a magnetic path to one side of the permanent magnet and a second magnetic path to the other side of the permanent magnet. A first input coil and a first output coil extend around portions of the first magnetic path, with the first input coil being at least partially positioned between the permanent magnet and the first output coil. A second input coil and a second output coil extend around portions of the second magnetic path, with the second input coil being at least partially positioned between the permanent magnet and the second output coil. The input coils are alternatively pulsed by a switching and control circuit and provide induced current pulses in the output coils. Driving electrical current through each of the input coils reduces a level of flux from the permanent magnet within the magnet path around which the input coil extends.

In an alternative embodiment of the Patrick et al electromagnetic generator, the magnetic core includes circular spaced-apart plates, with posts and permanent magnets extending in an alternating fashion between the plates. An output coil extends around each of these posts. Input coils extending around portions of the plates are pulsed to cause the induction of current within the output coils.

The apparent problems with the electric magnetic generator is disclosed in US Patent 6,362,718 seem to be twofold. First, it is more expensive to produce than necessary as it has four coils. Secondly, while it apparently achieves a Coefficient of Performance of more than 3.0, a much greater Coefficient of Performance is readily achievable. This is believed to be due to the specific physical configuration of the magnetic paths.

It is an object of the present invention to provide an electrical generator having a Coefficient of Performance significantly greater than 1.

SUMMARY OF THE INVENTION

In accordance with one aspect of the present invention there is disclosed a novel electrical generator comprising an induction coil. There is a first magnet positioned beside the first end of the induction coil so as to be in the electro-magnetic field of the induction coil when the induction coil is energised, and for creating a magnetic field around at least the first end of the induction coil. There is also a second magnet positioned near the second end of the induction coil so as to be in the electro-magnetic field of the induction coil when the induction coil is energised, and for creating a magnetic field around at least the second end of the induction coil. A power input circuit provides power to the induction coil. A timing device is placed in the input power circuit in order to create electrical pulses and for controlling the timing of those electrical pulses being passed to the induction coil. A power output circuit receives power from the induction coil.

Other advantages, features and characteristics of the present invention, as well as methods of operation and functions of the related elements of the structure, and the combination of parts and economies of manufacture, will become more apparent upon consideration of the following detailed description and the appended claims with reference to the accompanying drawings which are described here:

BRIEF DESCRIPTION OF THE DRAWINGS

The novel features which are believed to be characteristic of the electrical generator according to the present invention, as to its structure, organisation, use and method of operation, together with it's further objectives and advantages, will be better understood from the following drawings in which a preferred embodiment of the invention will now be illustrated by way of example. It is expressly understood, however, that the drawings are for the purpose of illustration and description only, and are not intended as a definition of the limits of the invention. In the accompanying drawings:

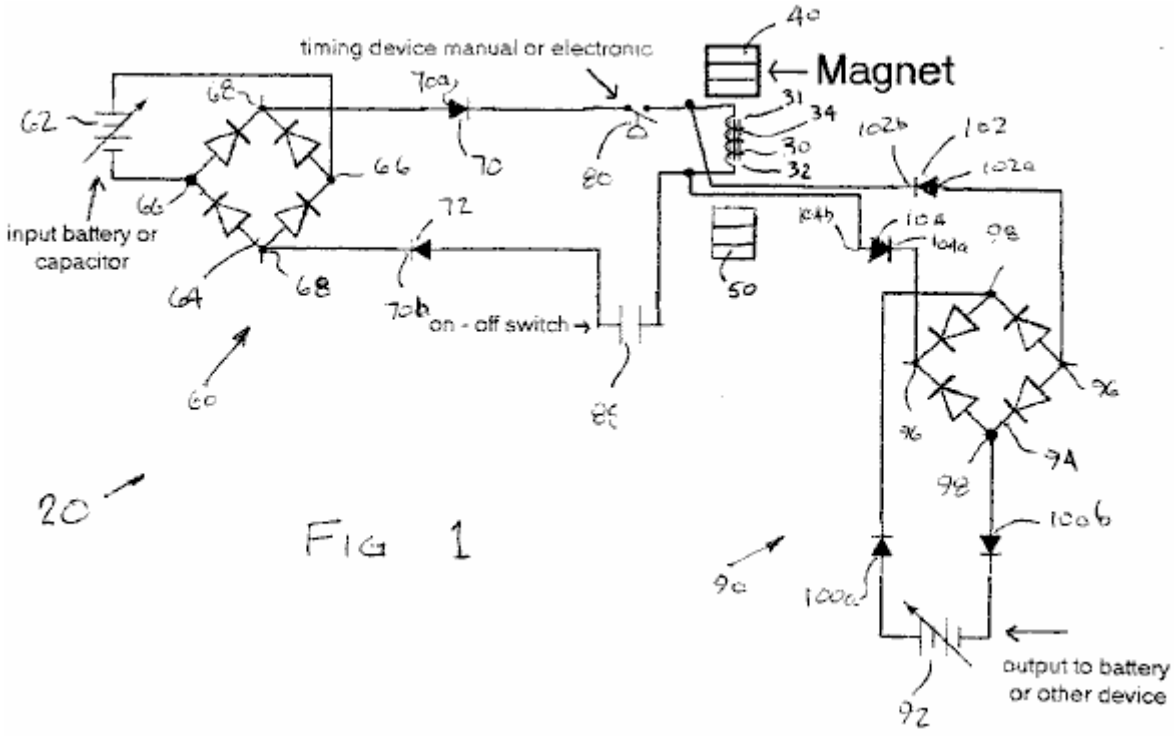

Fig.1 is an electrical schematic of the first preferred embodiment of the electrical generator.

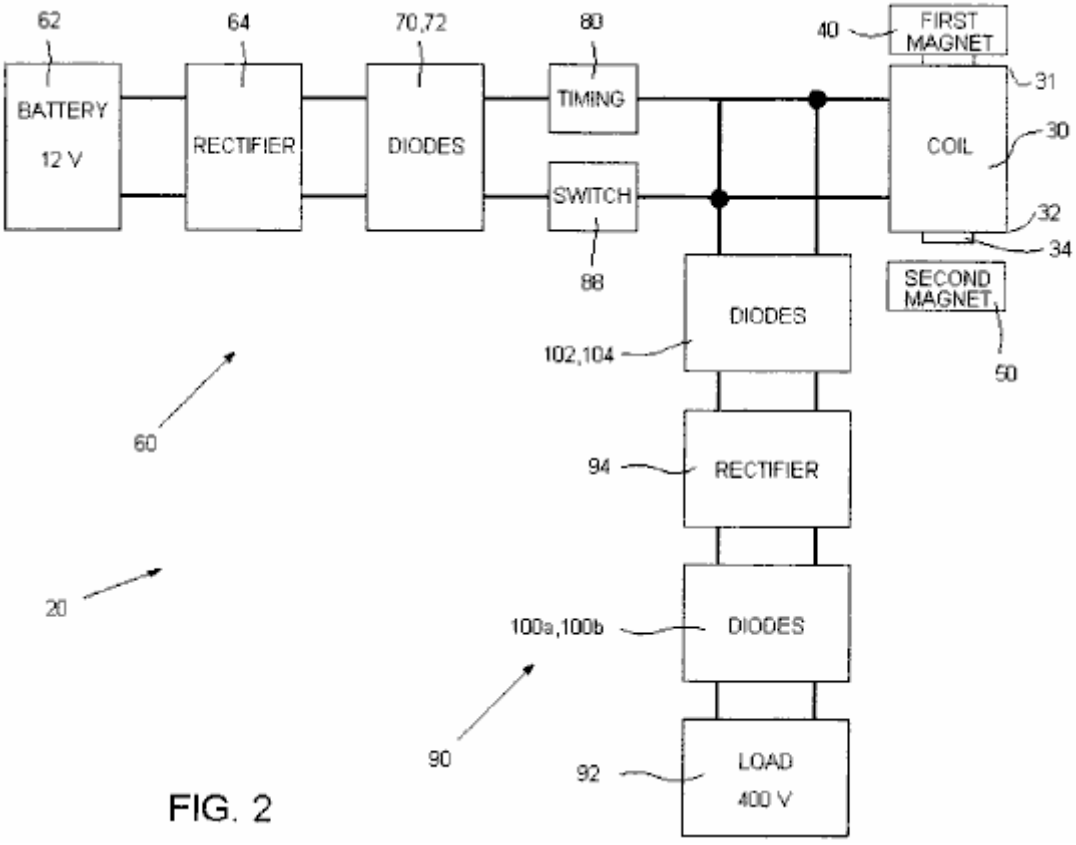

Fig.2 is a block diagram schematic of the first preferred embodiment of the electrical generator of **Fig.I**.

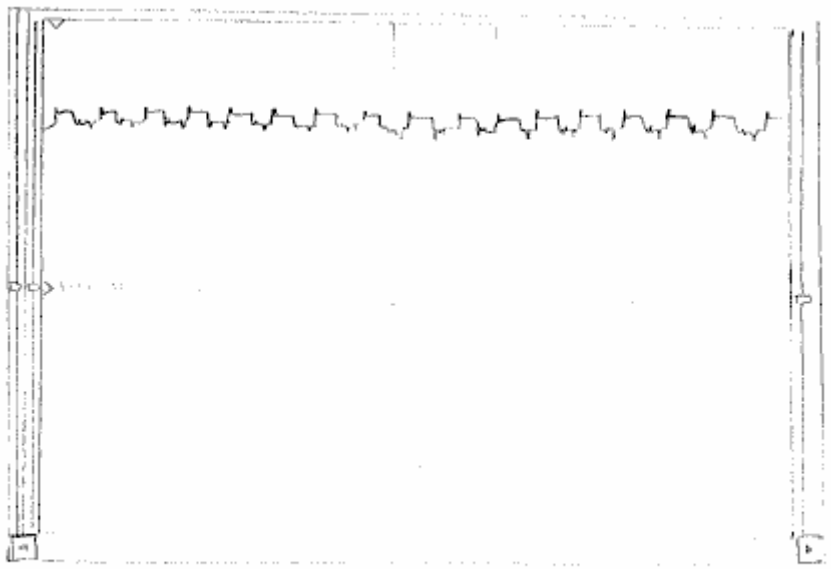

FIG. 3

Fig.3 is an oscilloscope waveform taken at the input power circuit after the timing mechanism.

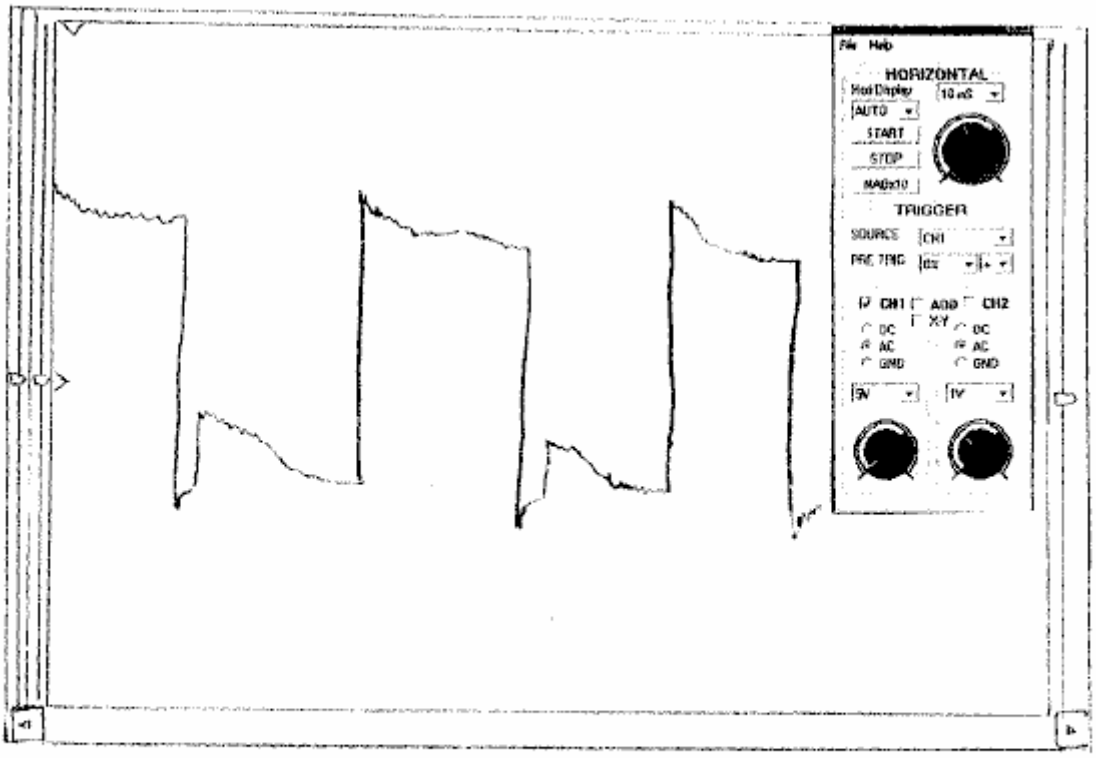

FIG. 4

Fig.4 is an oscilloscope waveform taken at the output power circuit before the first set of diodes immediately after the coil.

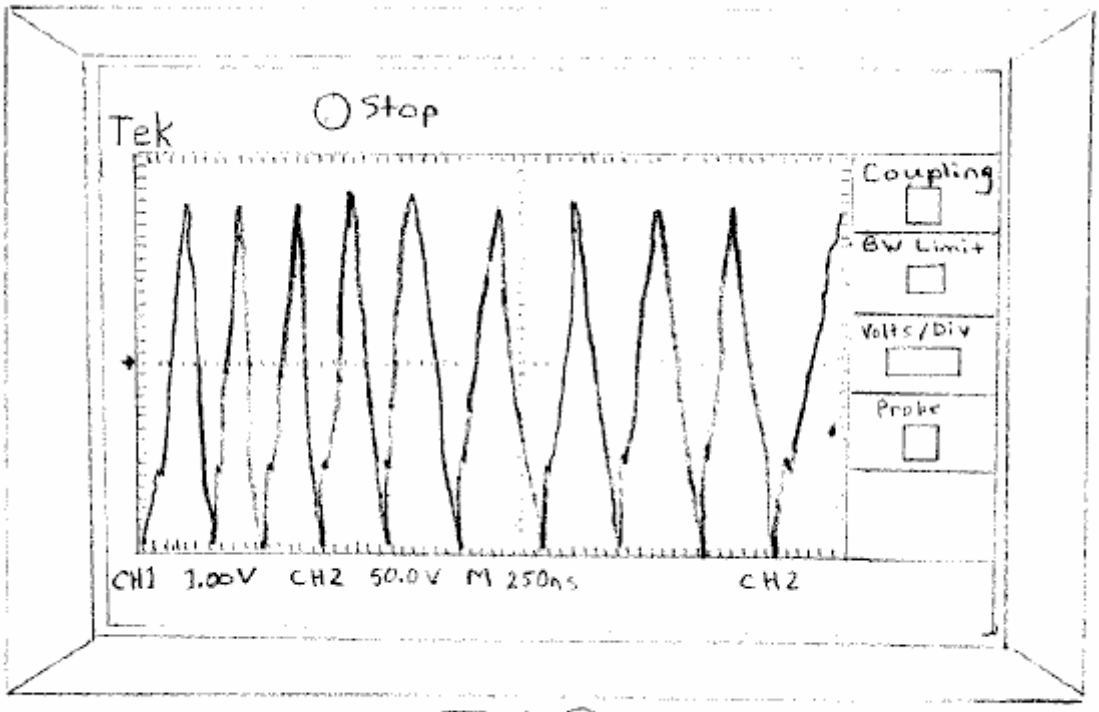

FIG. 5

Fig.5 is an oscilloscope waveform taken at the output power circuit at the load; and,

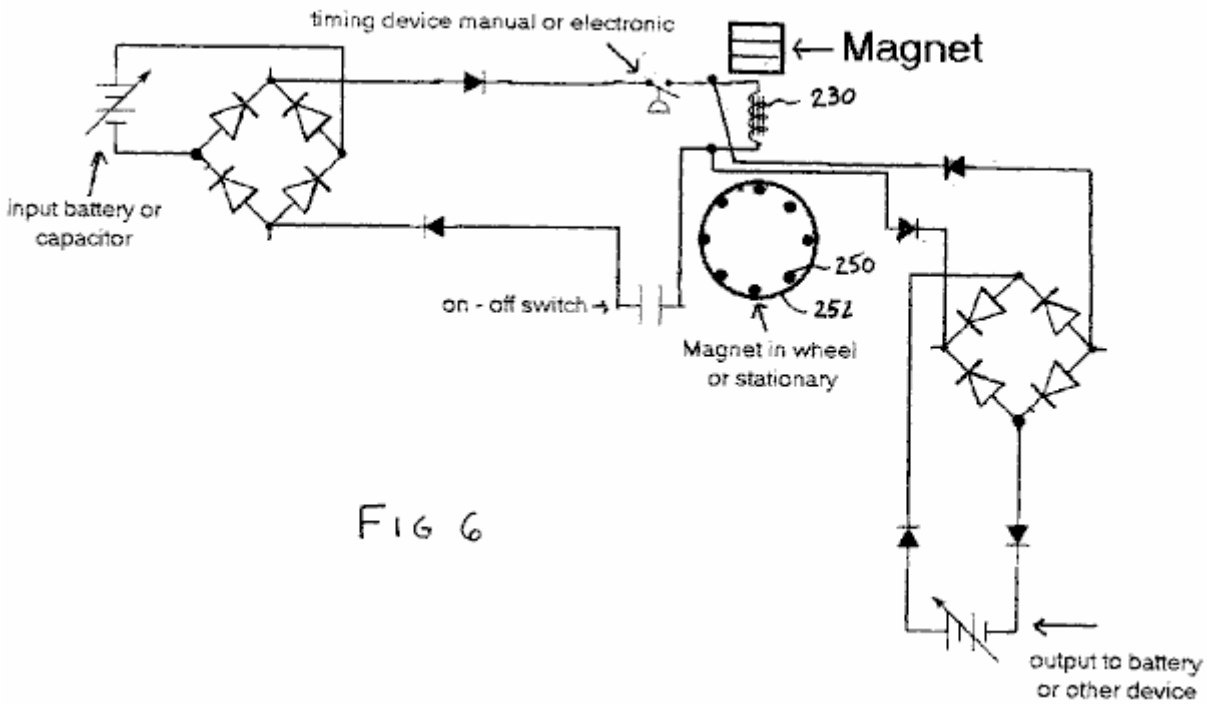

FIG 6

Fig.6 is an electrical schematic of the second preferred embodiment of the electrical generator
.

DETAILED DESCRIPTION OF THE PREFERRED EMBODIMENTS

Referring to **Fig.1** through **Fig.6** of the drawings, it will be noted that **Fig.1** through **Fig.5** illustrate a first preferred embodiment of the electrical generator of the present invention, and **Fig.6** illustrates a second preferred embodiment of the electrical generator of the present invention.

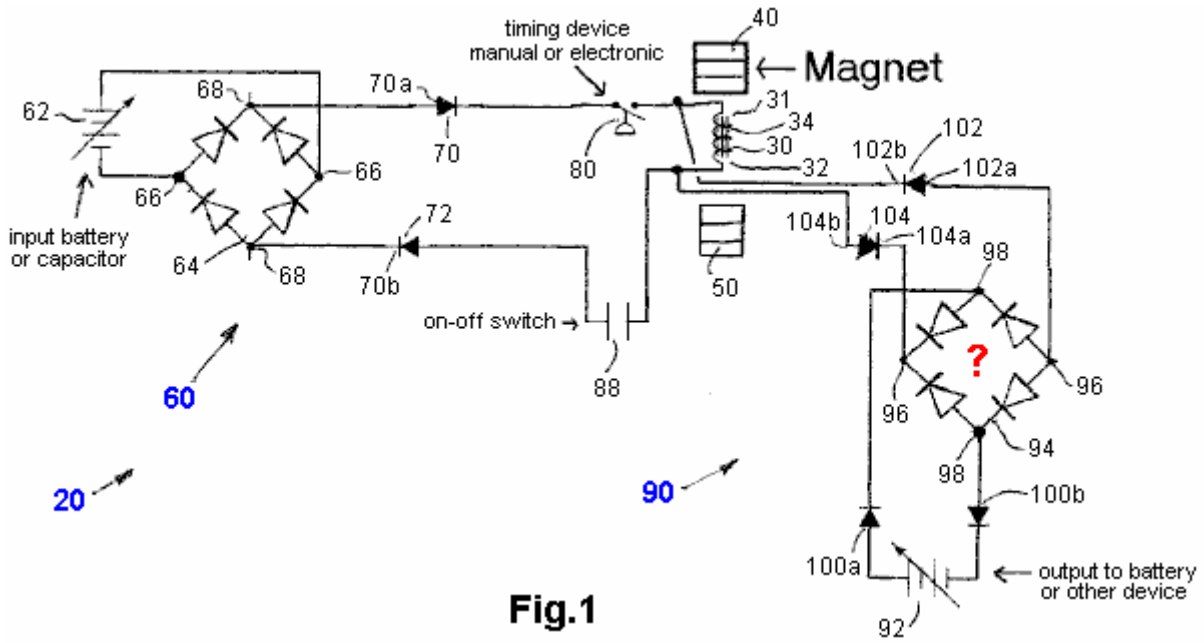

Fig.1

Reference will now be made to **Fig.1** through **Fig.5**, which show a first preferred embodiment of the electrical generator of the present invention, as indicated by general reference numeral **20**. The electrical generator **20** comprises an induction coil **30** having a first end **31** and a second end **32**. The induction coil **30** preferably includes a core **34** which is made from any suitable type of material, such as ferrite, mumetal, permalloy, cobalt, any non-permeable metal material, or any other suitable type of material. The coil **30** is wound with copper wire which can be a single size or multiple sizes depending on the size of the ferrite core **34**.

There is a first magnet **40** positioned adjacent to the induction coil **30**, preferably at the first end **31** so as to be within the electromagnetic field of the induction coil **30** when the induction coil **30** is energised. The first magnet **40** is a permanent magnet which has its North pole facing the first end **31** of the induction coil **30**. In the first preferred embodiment, the first magnet **40** is stationary with respect to the induction coil **30**, and even more preferably is in contact with, or is even secured to, the first end **31** of the induction coil **30**. The size of the coil and the copper wire used to wind the coil also depend on the size of the first magnet **40**. The first magnet **40** is there to create a magnetic field around at least the first end **31** of the first magnet **30**.

There is also a second magnet **50** positioned adjacent to the induction coil **30**, preferably at the second end **32** of the induction coil **30** but at a distance of about 1.0 cm or so from the coil core **34** but within the electromagnetic field of the induction coil **30** when the induction coil **30** is energised. The gap between the second end **32** of the induction coil **30** and the second magnet **50** can be an air gap or can be a vacuum.

The second magnet **50** is a permanent magnet which has it's North pole facing the second end **32** of the induction coil **30**. In the first preferred embodiment, the second magnet **50** is stationary with respect to the induction coil **30**. The size of the coil and the copper wire used to wind it also depends on the size of the second magnet **50**. The second magnet **50** is there in order to create a magnetic field around at least the second end **32** of the induction coil **30**.

As can be seen in **Fig.1**, the first magnet **40** is positioned so it's North pole is facing the first end **31** of the induction coil and its South pole is facing away from the first end **31** of the induction coil **30**. The first end **31** of the induction coil **30** creates a South magnetic field when it is energised. In this manner, the North pole of the first magnet **40** and the South pole of the first end **31** of the induction coil attract each other.

Similarly, but oppositely, the second magnet **50** is positioned so that it's North pole is facing the second end **32** of the induction coil and its South pole is facing away from the second end **32** of the induction coil **30**. The second end **32** of the induction coil **30** creates a North magnetic field when the induction coil **30** is energised. In this manner, the North pole of the second magnet **50** and the North pole of the second end **32** of the induction coil repel each other.

A power input circuit section, as indicated by the general reference numeral **60**, is for providing power to the induction coil and is comprised of a source of electrical power **62**. In the first preferred embodiment, as illustrated, the input source of electrical power **62** comprises a DC power source, specifically a battery **62**, but additionally or alternatively may comprise a capacitor (not shown). The source of electrical power can range from less than 1.0 volt to more than 1,000,000 volts, and can range from less than 1.0 amp to more than 1 million amps. Alternatively, it is contemplated that the input source of electrical power could be an AC power source (not shown).

An input rectifier **64** which is preferably, but not necessarily, a full-wave rectifier **64**, has an input **66** electrically connected to the source of electrical power **62** and also has an output **68**. A first diode **70** is connected at its positive end **70a** to one terminal **68a** of the output **68** of the rectifier **62**. A second diode **72** is connected at its negative end **72a** to the other terminal **68b** of the output **68** of the rectifier **62**.

There is also a timing mechanism **80** in the input power circuit section **60**, which as shown, is electrically connected in series with the first diode **70**. This timing mechanism both creates electrical pulses and controls the timing of those electrical pulses which are fed to the induction coil **30**. The pulses are basically saw-tooth waveforms, as can be seen in **Fig.3**.

In the first preferred embodiment, the timing device **80** is a manual timer in the form of a set of "points" from the ignition system of a vehicle, as they can withstand high voltage and high current levels. Alternatively, it is contemplated that the timing mechanism could be an electronic timing circuit. It is also contemplated that a TGBT unit from a MIG welder could be used as the basis of the timing device **80**. It has been found that a timing device which provides a physical break in its "off" configuration works well as stray currents cannot backtrack through the circuit at that time. The timing mechanism can be of any suitable design so long as it can respond to the placement of the magnets **50** in the rotor **52** in the second preferred embodiment shown in **Fig.6**.

When the device is in use, the magnetic fields created by the first magnet 40 and the second magnet **50** in conjunction with the coil **30**, are each somewhat mushroom shaped, and oscillate back and forth, with respect to their size, in a manner corresponding to the timing of the electrical pulses from the power input circuit **60**, as controlled by the timing mechanism **80**.

The power input circuit **60** has an on/off switch **88** to allow disconnection of the power feed to the induction coil **30**. The on/off switch **88** may alternatively be located in any other suitable place in the power input circuit **60**.

A power output circuit section, indicated by the general reference numeral **90**, is for receiving power from the induction coil and comprises an electrical load **92**, which, in the first preferred embodiment is a battery **92**, but may additionally or alternatively comprise a capacitor (not shown), or any other suitable electrical load device.

The power output circuit portion **90** also has an output rectifier **94** having an input **96** an output **98** electrically connected to the electrical load **92** via a pair of forward biased diodes **100a, 100b** which prevent the electrical load **92** from powering the induction coil **30**. A first diode **102** is electrically connected at its positive end **102a** to one terminal **94a** of the input of the rectifier **94** and is electrically connected at its negative end **102b** to one end of the induction coil **30**. A second diode **104** is connected at its negative end **104a** to the other terminal **94b** of the input of the rectifier **94** and is electrically connected at its positive end **104b** to the other end of the induction coil **30**. The output of the coil, taken before the diodes **102,104** is shown in **Fig.4**.

Note: It is highly likely that there is a clerical error in **Fig.1** because as it is drawn the bridge input is point **98** and not **96** as stated. If this is the case, then the two diode bridges are identical and the output section should be drawn like this:

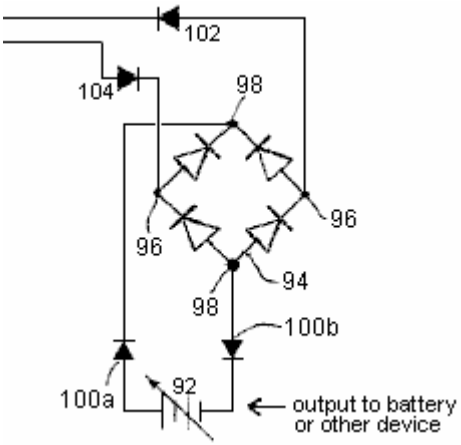

although it is by no means obvious why diodes 102 and 104 are needed as their function would appear to be provided by the output bridge diodes.

The output to the electrical load **92** of the power output circuit **90** can range from less than 1 volt to more than 1,000,000 volts, and can range from less than one amp to more than 1 million amps. As can be seen in **Fig.5**, the output to the electrical load **92** comprises generally spike-shaped pulses which have both negative and positive components.

As can be readily seen in **Fig.1** and **Fig.2**, the input power circuit **60** is electrically connected in parallel with the induction coil **30** and the output power circuit portion **90** is electrically connected in parallel with the induction coil **30**.

The various diodes and rectifiers in the electrical generator **20** can be of any suitable voltage from about 12 volts to over 1,000,000 volts, and can have slow recovery or fast recovery, as desired. Further, the various diodes and rectifiers may be configured in other suitable formats. There also may be additional capacitors added into the power output circuit adjacent to the electrical load **92** in order to increase the output power before discharge.

It has been found that setting the timing to six hundred pulses per minute (10 Hz) provides a waveform in the power output circuit portion 90 that comprises generally spike-shaped pulses with a period of about 20 nanoseconds. It is believed that the flux of the power pulses that are input into the induction coil **30** is quickly shifting the magnetic field back and forth in the induction coil **30**, which is akin to the flux of the power pulses creating its own echo. The various electromagnetic oscillations in the coil provide a much higher frequency in the power output circuit **90** than in the power input circuit portion **60**.

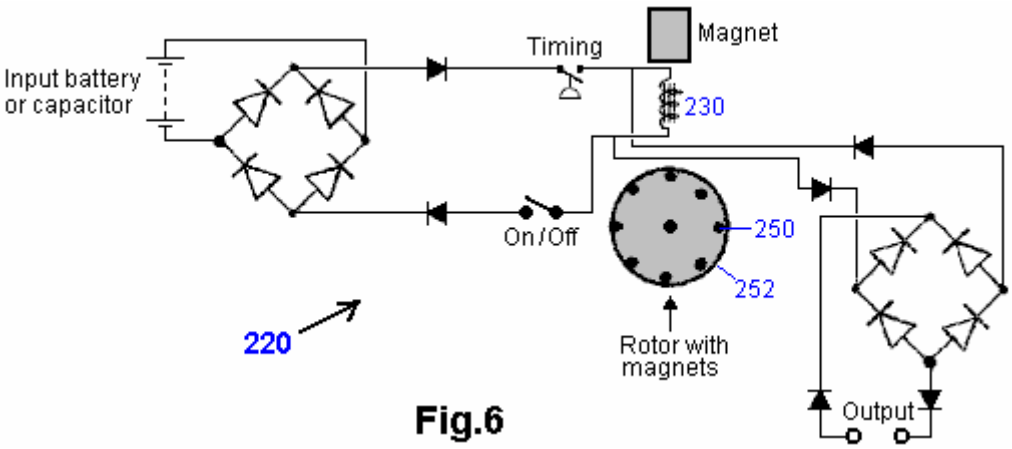

Fig.6

Reference will now be made to **Fig.6**, which shows a second preferred embodiment of the electrical generator of the present invention, as indicated by general reference numeral **220**. The second preferred embodiment electrical generator is similar to the first preferred embodiment electrical generator **20** except that the second magnet comprises several moving magnets **250**, typically eight permanent magnets **250**. These magnets are mounted on a wheel **252**, which is free to rotate. Ideally, these magnets are mounted in an identical way to each other on the rotor disc **252**. If desired, there can be any suitable number of magnets mounted in the rotor. Accordingly, at least one rotor magnet **250** will be within the electromagnetic field of the induction coil **230** when the coil is energised. The rotor magnets can be of any suitable strength and any suitable type of magnet, and they may be mounted on the rotator by any suitable means, such as a suitable adhesive, or moulded into the disc

if the rotor is made of plastic. In practice, the rotor disc is driven round by the magnetic field of the induction coil when it is energised. It is also possible for the first magnet to a rotor magnet in the same manner as described for the second magnet **250**.

As can be understood from the above description and from the accompanying drawings, the present invention provides an electrical generator having a Coefficient of Performance greater than 1.0. and more specifically, an electrical generator which has a Coefficient of Performance significantly greater than 1.0. An electrical generator having a Coefficient of Performance significantly greater than 1.0 is at present, unknown in the prior art.

Other variations of the above principles will be apparent to those who are knowledgeable in the field of the invention, and such variations are considered to be within the scope of the present invention. Further, other modifications and alterations may be used in the design and manufacture of the electrical generator of the present invention without departing from the spirit and scope of the following claims:

CLAIMS

1. An electrical generator comprising:
an induction coil having a first end and a second end;
a first magnet positioned adjacent said first end of said induction coil so as to be in the electromagnetic field of said induction coil when said induction coil is energised, and for creating a magnetic field around at least said first end of said induction coil,
a second magnet positioned adjacent said second end of said induction coil so as to be in the electro-magnetic field of said induction coil when said induction coil is energized, and for creating a magnetic field around at least said second end of said induction coil;
a power input circuit portion for providing power to said induction coil;
a liming means in said power input circuit portion for creating electrical pulses and controlling the timing of said electrical pulses to said induction coil; and,
a power output circuit portion for receiving power from said induction coil.

2. The electrical generator of claim 1 , wherein said first magnet is stationary with respect to said induction coil.

3. The electrical generator of claim 2, wherein said first magnet comprises a permanent magnet.

4. The electrical generator of claim 2, wherein said induction coil includes a core.

5. The electrical generator of claim 4, wherein said first magnet is in contact with said core.

6. The electrical generator of claim 4, wherein said core is made from a material chosen from the group of ferrite, mumetal, permalloy, and cobalt.

7. The electrical generator of claim 4, wherein said core is made from a non-permeable metal material.

8. The electrical generator of claim 3, wherein said second magnet is stationary with respect to said induction coil.

9. The electrical generator of claim 8, wherein said second magnet comprises a permanent magnet.

10. The electrical generator of claim 1, wherein said second magnet comprises at least one movable magnet.

11. The electrical generator of claim 10. wherein said at least one movable magnet is mounted on a rotor.

12. The electrical generator of claim 11 , wherein said at least one movable magnet comprises a plurality of magnets mounted on said rotor.

13. The electrical generator of claim 1, wherein said power input circuit portion comprises a source of electrical power, a input rectifier having an input electrically connected to said source of electrical power and an output, a first diode connected at its positive end to one terminal of said input rectifier, a second diode connected at its negative end to the other terminal of said input rectifier.

14. The electrical generator of claim 13, wherein said timing means is electrically connected in series with said first diode.

15. The electrical generator of claim 14, wherein said power output circuit portion comprising an electrical load, an output rectifier having an output electrically connected to said electrical load via a pair of forward biased diodes and an input, a first diode connected at its negative end to one terminal of said output rectifier, a

second diode connected at its positive end to the other terminal of said output rectifier.

16. The electrical generator of claim 15, wherein said input power circuit portion is electrically connected in parallel with said induction coil and said output power circuit portion is electrically connected in parallel with said induction coil.

17. The electrical generator of claim 1, wherein said input source of electrical power comprises a DC power source.

18. The electrical generator of claim 17, wherein said DC power source comprises a battery.

19. The electrical generator of claim 17, wherein said DC power source comprises a capacitor.

20. The electrical generator of claim 1 , wherein said input source of electrical power comprises an AC power source.

21. The electrical generator of claim 1 where the input rectifier is a Wheatstone bridge rectifier.

22. The electrical generator of claim 1 , wherein said timing means comprises an electronic timing circuit.

23. The electrical generator of claim 1 , wherein said timing means comprises a manual timer.

24. The electrical generator of claim 1, wherein said first magnet comprises a permanent magnet.

25. (Appears to have been omitted from the archived copy)

26. The electrical generator of claim 12, wherein said plurality of movable magnets are each mounted similarly one to another on said rotatable wheel.

27. The electrical generator of claim 1 , wherein said electrical load comprises a battery.

28. The electrical generator of claim 1 , further comprising an on/off switch electrically connected in said power input circuit portion.

The Motionless Generator of Graham Gunderson

Graham Gunderson's Solid-State Electric Generator is shown in US Patent Application 2006/0163971 A1 of 27th July 2006. The details are as follows:

Abstract
A solid-state electrical generator including at least one permanent magnet, magnetically coupled to a ferromagnetic core provided with at least one hole penetrating its volume; the hole(s) and magnet(s) being placed so that the hole(s) intercept flux from the permanent magnet(s) coupled into the ferromagnetic core. A first wire coil is wound around the ferromagnetic core for the purpose of moving the coupled permanent magnet flux within the ferromagnetic core. A second wire is routed through the hole(s) penetrating the volume of the ferromagnetic core, for the purpose of intercepting this moving magnetic flux, thereby inducing an output electromotive force. A changing voltage applied to the first wire coil causes coupled permanent magnet flux to move within the core relative to the hole(s) penetrating the core volume, thus inducing electromotive force along wire(s) passing through the hole(s) in the ferromagnetic core. The mechanical action of an electrical generator is therefore synthesised without the use of moving parts.

Background
This invention relates to a method and device for generating electrical power using solid state means.

It has long been known that moving a magnetic field across a wire will generate an electromotive force (EMF), or voltage, along the wire. When this wire is connected in a closed electrical circuit, an electric current, capable of performing work, is driven through this closed circuit by the induced electromotive force.

It has also long been known that this resulting electric current causes the closed circuit to become encircled with a secondary, induced magnetic field, whose polarity opposes the primary magnetic field which first induced the EMF. This magnetic opposition creates mutual repulsion as a moving magnet approaches such a closed circuit, and a mutual attraction as that moving magnet moves away from the closed circuit. Both these actions tend to slow or cause "drag" on the progress of the moving magnet, causing the electric generator to act as a magnetic brake, whose effect is in direct proportion to the amount of electric current produced.

Historically, gas engines, hydroelectric dams and steam-fed turbines have been used to overcome this magnetic braking action which occurs within mechanical generators. A large amount of mechanical power is required to produce a large amount of electrical power, since the magnetic braking is generally proportional to the amount of electrical power being generated.

There has long been felt the need for a generator which reduces or eliminates the well-known magnetic braking interaction, while nevertheless generating useful electric power. The need for convenient, economical and powerful sources of renewable energy remains urgent. When the magnetic fields within a generator are caused to move and interact by means other than applied mechanical force, electric power can be supplied without the necessity of consuming limited natural resources, thus with far greater economy.

Summary of the Invention
It has long been known that the source of the magnetism within a permanent magnet is a spinning electric current within ferromagnetic atoms of certain elements, persisting indefinitely in accord with well-defined quantum rules. This atomic current encircles every atom, thereby causing each atom to emit a magnetic field, as a miniature electromagnet.

This atomic current does not exist in magnets alone. It also exists in ordinary metallic iron, and in any element or metallic alloy which can be "magnetised", that is, any material which exhibits ferromagnetism. All ferromagnetic atoms and "magnetic metals" contain such quantum atomic electromagnets.

In specific ferromagnetic materials, the orientation axis of each atomic electromagnet is flexible. The orientation of magnetic flux both internal and external to the material, pivots easily. Such materials are referred to as magnetically "soft", due to this magnetic flexibility.

Permanent magnet materials are magnetically "hard". The orientation axis of each is fixed in place within a rigid crystal structure. The total magnetic field produced by these atoms cannot easily move. This constraint aligns the field of ordinary magnets permanently, hence the name "permanent".

The axis of circular current flow in one ferromagnetic atom can direct the axis of magnetism within another ferromagnetic atom, through a process known as "spin exchange". This gives a soft magnetic material, like raw

iron, the useful ability to aim, focus and redirect the magnetic field emitted from a magnetically hard permanent magnet.

In the present invention, a permanent magnet's rigid field is sent into a magnetically flexible "soft" magnetic material. the permanent magnet's apparent location, observed from points within the magnetically soft material, will effectively move, vibrate, and appear to shift position when the magnetisation of the soft magnetic material is modulated by ancillary means (much like the sun, viewed while underwater, appears to move when the water is agitated). By this mechanism, the motion required for generation of electricity can be synthesised within a soft magnetic material, without requiring physical movement or an applied mechanical force.

The present invention synthesises the virtual motion of magnets and their magnetic fields, without the need for mechanical action or moving parts, to produce the electrical generator described here. The present invention describes an electrical generator where magnetic braking known as expressions of Lenz's Law, do not oppose the means by which the magnetic field energy is caused to move. The synthesised magnetic motion is produced without either mechanical or electrical resistance. This synthesised magnetic motion is aided by forces generated in accordance with Lenz's Law, in order to produce acceleration of the synthesised magnetic motion, instead of physical "magnetic braking" common to mechanically-actuated electrical generators. Because of this novel magnetic interaction, the solid-state static generator of the present invention is a robust generator, requiring only a small electric force of operate.

Brief Description of the Drawings

The appended drawings illustrate only typical embodiments of this invention and are therefore not to be considered limiting of its scope, as the invention encompasses other equally effective embodiments.

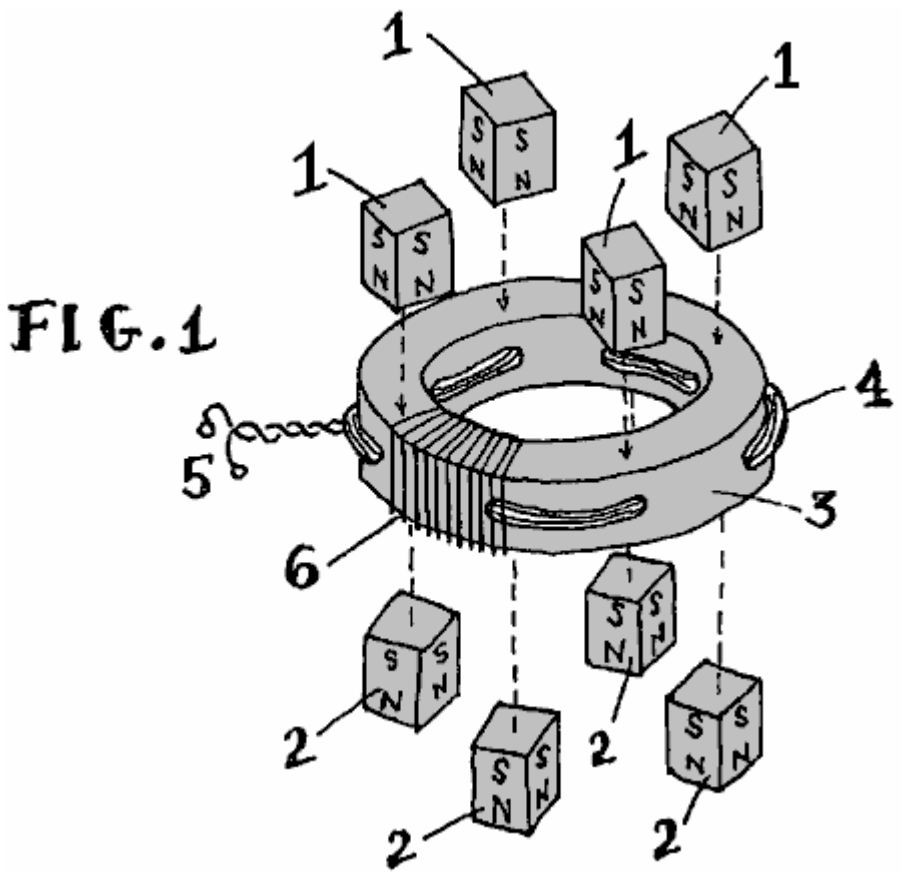

Fig.1 is an exploded view of the generator of this invention.

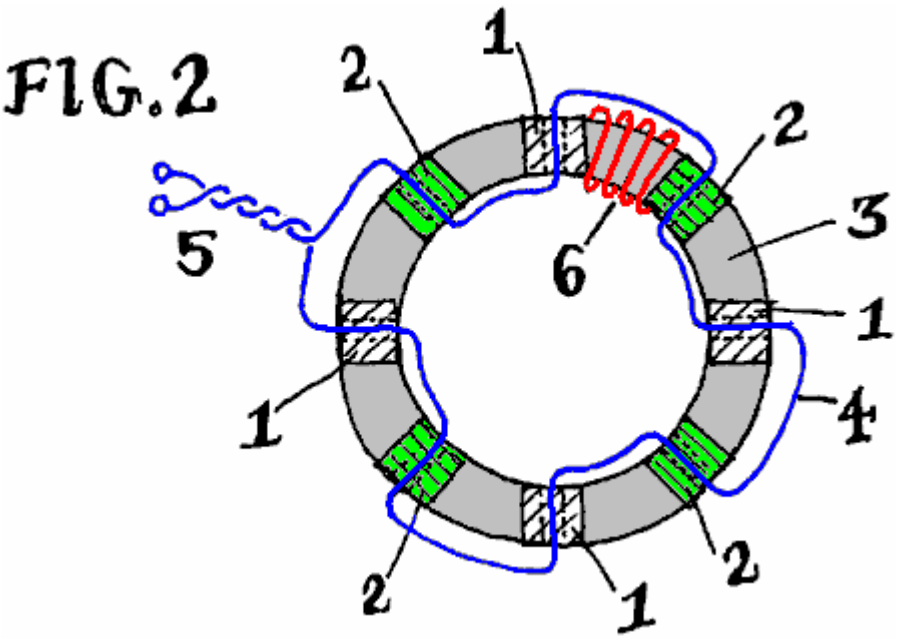

Fig.2 is a cross-sectional elevation of the generator of this invention.

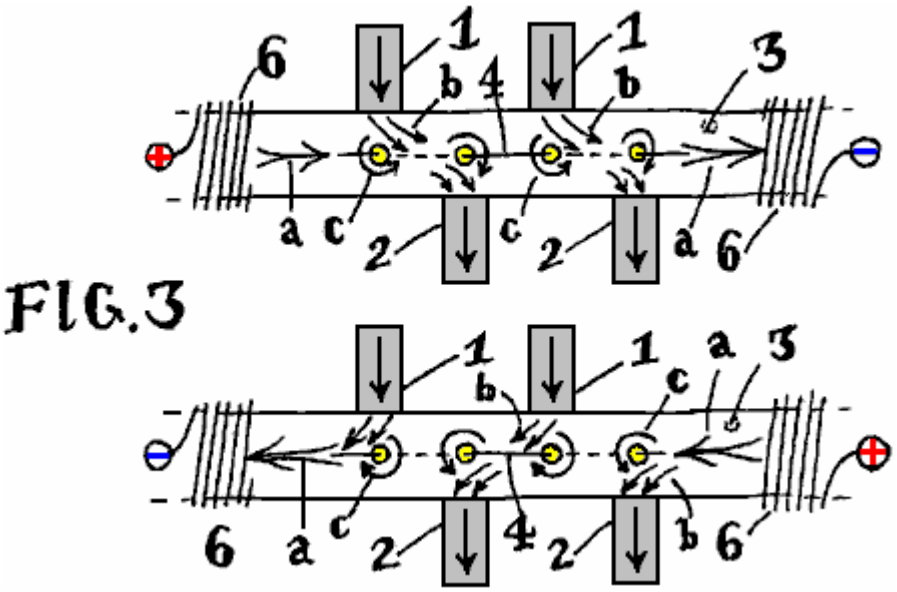

Fig.3 is a schematic diagram of the magnetic action occurring within the generator of **Fig.1** and **Fig.2**.

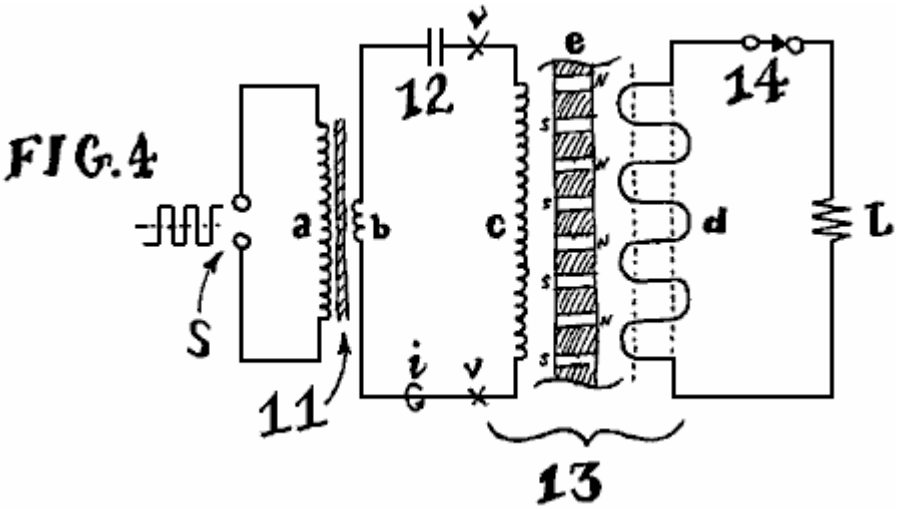

Fig.4 is a circuit diagram, illustrating one method of operating the electrical generator of this invention.

Detailed Description of the Invention

Fig.1 depicts a partially exploded view of an embodiment of an electrical generator of this invention. The part numbers also apply in **Fig.2** and **Fig.3**.

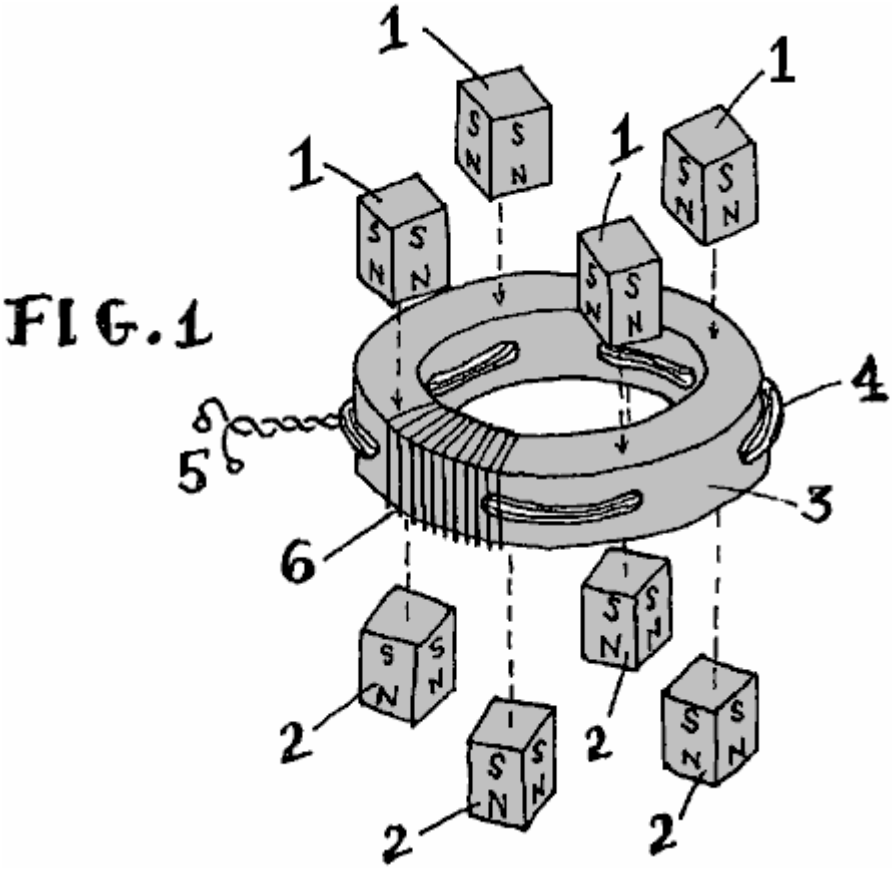

Numeral **1** represents a permanent magnet with it's North pole pointing inward towards the soft ferromagnetic core of the device. Similarly, numeral **2** indicates permanent magnets (preferably of the same size, shape and composition), with their South poles aimed inward towards the opposite side, or opposite surface of the device. The letters "**S**" and "**N**" denote these magnetic poles in the drawings. Other magnetic polarities and configurations may be used with success; the pattern shown merely illustrates one efficient method of adding magnets to the core.

The magnets may be formed of any polarised magnetic material. In order of descending effectiveness, the most desirable permanent magnet materials are Neodymium-Iron-Boron ("NIB"), Samarium Cobalt, AlNiCo alloy, or

“ceramic” Strontium-Barium or Lead-Ferrite. A primary factor determining permanent magnet material composition is the magnetic flux strength of the particular material type. In an embodiment of the invention, these magnets may also be substituted with one or more electromagnets producing the required magnetic flux. In another embodiment of the invention, a superimposed DC current bias can be applied to the output wire to generate the required magnetic flux, replacing or augmenting the permanent magnets.

Numeral **3** indicates the magnetic core. This core is a critical component of the generator. The core determines the output power capacity, the optimum magnet type, the electrical impedance and the operating frequency range. The core may be any shape, composed of any ferromagnetic material, formed by any process (sintering, casting, adhesive bonding, tape-winding, etc.). A wide range of shapes, materials and processes is known in the art of making magnetic cores. Effective common materials include amorphous metal alloys (such as sold under the “Metglas” trademark by Metglas Inc., Conway, S.C.), nanocrystalline alloys, manganese and zinc ferrites as well as ferrites of any suitable element including any combination of magnetically “hard” and “soft” ferrites, powdered metals and ferromagnetic alloys, laminations of cobalt and/or iron and silicon-iron “electrical steel”. This invention successfully utilises any ferromagnetic material, while functioning as claimed. In an embodiment of the invention, and for the purpose of illustration, a circular “toroid” core is illustrated. In an embodiment of the invention, the composition may be bonded iron powder, commonly available from many manufacturers.

Regardless of core type, the core is prepared with holes, through which, wires may pass. the holes are drilled or formed to penetrate the core’s ferromagnetic volume. The toroidal core **3** shown, includes radial holes pointing towards a common centre. If, for example, stiff wire rods were to be inserted through each of these holes, these rods would meet at the centre point of the core, producing an appearance similar to a wheel with spokes. If a square or rectangular core (not illustrated) is used, then these holes are preferably oriented parallel to the core’s flat sides, causing stiff rods passed through the holes to form a square grid pattern, as the rods cross each other in the interior “window” area framed by the core. While in other embodiments of the invention, these holes may take any possible orientation or patterns of orientation, a simple row of radial holes is illustrated as one example.

Numeral **4** depicts a wire, or bundle of wires which pick up and carry the output power of the generator. Typically, this wire is composed of insulated copper, though other materials such as aluminium, iron, dielectric material, polymers and semiconducting materials may be substituted. It may be seen in **Fig.1** and **Fig.2**, that wire **4** passes alternately through neighbouring holes formed in core **3**. The path taken by wire **4** undulates as it passes in opposite direction through each adjacent hole. If an even number of holes is used, the wire will emerge on the same side of the core on which it first entered. Once all the holes are filled, the resulting pair of trailing leads may be twisted together or similarly terminated, forming the output terminals of the generator shown at numeral **5**. Output wire **4**, may also make multiple passes through each hole in the core. Though the winding pattern is not necessarily undulatory, this basic form is shown as an example. Many effective connection styles exist. This illustration shows the most simple.

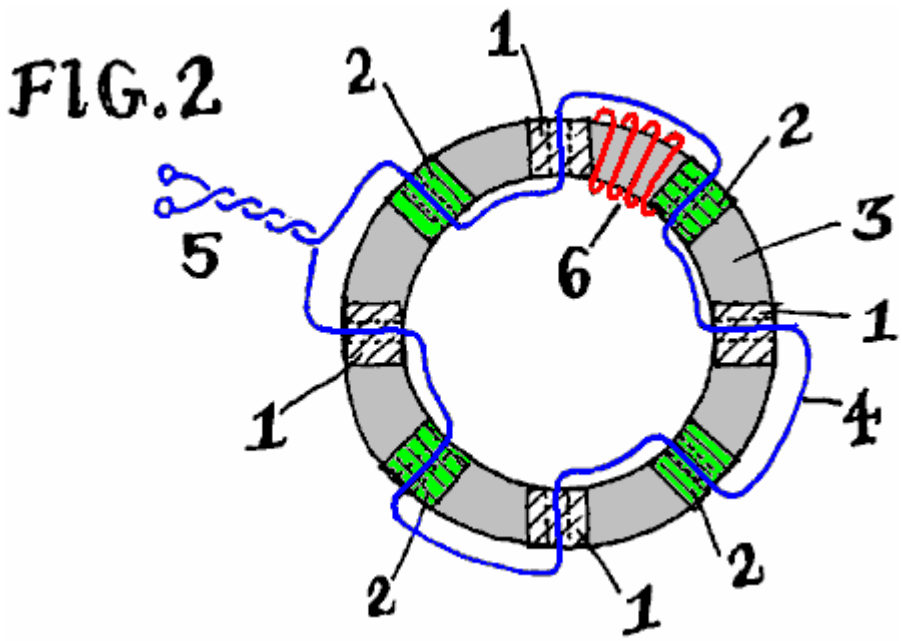

Numeral **6** in **Fig.1**, **Fig.2** and **Fig.3**, points to a partial illustration of the input winding, or inductive coil used to shift the fields of the permanent magnets, within the core. Typically, this wire coil encircles the core, wrapping around it. For the toroidal core shown, input coil **6** resembles the outer windings of a typical toroidal inductor - a common electrical component. For the sake of clarity, only a few turns of coil **6** are shown in each of **Fig.1**, **Fig.2**

and **Fig.3**. In practice, this coil may cover the entire core, or specific sections of the core, including, or not including the magnets.

Fig.2 shows the same electrical generator of **Fig.1**, looking transparently "down" through it from above, so that the relative positions of the core holes (shown as dotted lines), the path of the output wire **4**, and the position of the magnets (white hatched areas for magnets under the core and green hatched areas for magnets above the core) are made clear. The few representative turns of the input coil **6** are shown in red in **Fig.2**.

The generator illustrated, uses a core with 8 radially drilled holes. The spacing between these holes is equal. As shown, each hole is displaced by 45 degrees from each of it's adjoining holes. The centres of all of the holes lie on a common plane lying half-way down the vertical thickness of the core. Cores of any shape or size may have as few as two or as many as hundreds of holes and a similar number of magnets. Other variations exist, such as generators with multiple rows of holes, zigzag and diagonal patterns, or output wire **4** moulded directly into the core material. In any case, the basic magnetic interaction shown in **Fig.3** occurs for each hole in the core as described below.

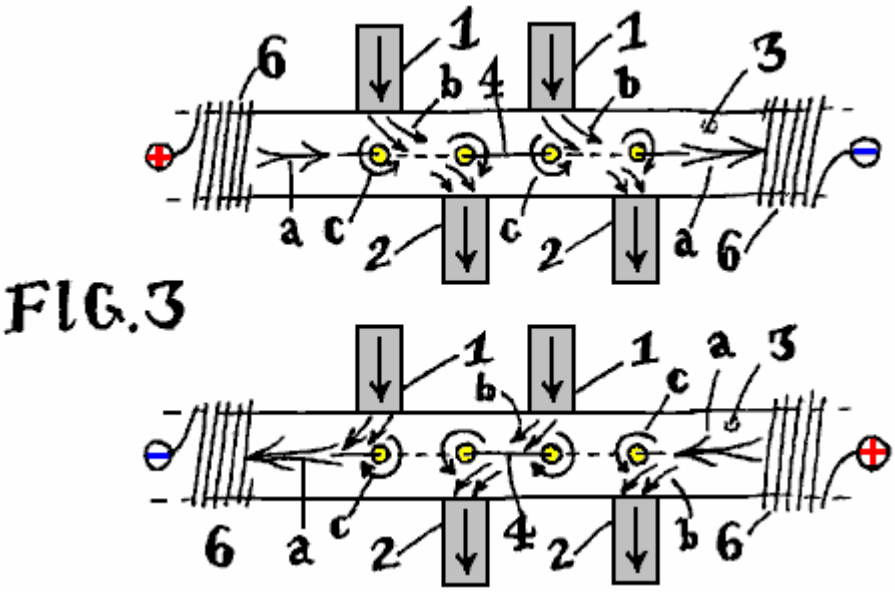

Fig.3 shows the same design, viewed from the side. The curvature of the core is shown flattened on the page for the purpose of illustration. The magnets are represented schematically, protruding from the top and bottom of the core, and including arrows indicating the direction of magnetic flux (the arrow heads point to the magnet's North pole).

In practice, the free, unattached polar ends of the generator's magnets may be left "as-is" in open air, or they may be provided with a common ferromagnetic path linking the unattached North and South poles together as a magnetic "ground". The common return path is typically made of steel, iron or similar material, taking the form of a ferrous enclosure housing the device. It may serve the additional purpose of a protecting chassis. The magnetic return may also be another ferromagnetic core of a similar electric generator stacked on top of the illustrated generator. There can be a stack of generators, sharing common magnets between the generator cores. Any such additions are without direct bearing on the functional principle of the generator itself, and have therefore been omitted from these illustrations.

Two example flux diagrams are shown in **Fig.3**. Each example is shown in a space between schematically depicted partial input coils **6**. A positive or negative polarity marker indicates the direction of input current, applied through the input coil. This applied current produces "modulating" magnetic flux, which is used to synthesise apparent motion of the permanent magnets, and is shown as a double-tailed horizontal arrow (**a**) along the core **3**. Each example shows this double-tailed arrow (**a**) pointing to the right or to the left, depending on the polarity of the applied current.

In either case, vertical flux entering the core (**b,3**) from the external permanent magnets (**1,2**) is swept along within the core, in the direction of the double-tailed arrow (**a**), representing the magnetic flux of the input coil. These curved arrows (**b**) in the space between the magnets and the holes, can be seen to shift or bend (**a** --> **b**), as if they were streams or jets of air subject to a changing wind.

The resulting sweeping motion of the fields of the permanent magnets, causes their flux (**b**) to brush back and forth over the holes and wire **4** which passes through these holes. Just as in a mechanical generator, when the

magnetic flux brushes or “cuts” sideways across a conductor in this way, voltage is induced in the conductor. If an electrical load is connected across the ends of this wire conductor (numeral **5** in **Fig.1** and **Fig.2**), a current flows through the load via this closed circuit, delivering electrical power able to perform work. Input of an alternating current across the input coil **6**, generates an alternating magnetic field (**a**) causing the fields of permanent magnets **1** and **2** to shift (**b**) within the core **3**, inducing electrical power through a load (attached to terminals **5**), as if the fixed magnets (**1**,**2**) themselves were physically moving. However, no mechanical motion is present.

In a mechanical generator, induced current powering an electrical load, returns through output wire **4**, creating a secondary induced magnetic field, exerting forces which substantially oppose the original magnetic field inducing the original EMF. Since load currents induce their own, secondary magnetic fields opposing the original act of induction in this way, the source of the original induction requires additional energy to restore itself and continue generating electricity. In mechanical generators, the energy-inducing motion of the generator’s magnetic fields is being physically actuated, requiring a strong prime mover (such as a steam turbine) to restore the EMF-generating magnetic fields’ motion against the braking effect of the output-induced magnetic fields (the induced field **c** and the inducing field **b**), destructively in mutual opposition, which must ultimately be overcome by physical force, which is commonly produced by the consumption of other energy resources.

The electrical generator of the present invention is not actuated by mechanical force. It makes use of the induced secondary magnetic field in such a way as to not cause opposition, but instead, addition and resulting acceleration of magnetic field motion. Because the present invention is not mechanically actuated, and because the magnetic fields do not act to destroy one another in mutual opposition, the present invention does not require the consumption of natural resources in order to generate electricity.

The present generator’s induced magnetic field, resulting from electrical current flowing through the load and returning through output wire **4**, is that of a closed loop encircling each hole in the core. The induced magnetic fields create magnetic flux in the form of closed loops within the ferromagnetic core. The magnetic field “encircles” each hole in the core which carries output wire **4**. This is similar to the threads of a screw “encircling” the shaft of the screw.

Within this generator, the magnetic field from output wire **4** immediately encircles each hole formed in the core (**c**). Since wire **4** may take an opposing direction through each neighbouring hole, the direction of the resulting magnetic field will likewise be opposite. The direction of arrows (**b**) and (**c**) are, at each hole, opposing, headed in opposite directions, since (**b**) is the inducing flux and (**c**) is the induced flux, each opposing one another while generating electricity.

However, this magnetic opposition is effectively directed against the permanent magnets which are injecting their flux into the core, but not the source of the alternating magnetic input field **6**. In the present solid-state generator, induced output flux (**4**,**c**) is directed to oppose the permanent magnets (**1**,**2**) not the input flux source (**6**, **a**) which is synthesising the virtual motion of those magnets (**1**,**2**) by it’s magnetising action on core **3**.

The present generator employs magnets as the source of motive pressure driving the generator, since they are the entity being opposed or “pushed against” by the opposing reaction induced by output current which is powering a load. Experiments show that high-quality permanent magnets can be magnetically “pushed against” in this way for very long periods of time, before becoming demagnetised or “spent”.

Fig.3 illustrates inducing representative flux arrows (**b**) directed oppositely against induced representative flux (**c**). In materials typically used to form core **3**, fields flowing in mutually opposite directions tend to cancel each other, just as positive and negative numbers of equal magnitude sum to zero.

On the remaining side of each hole, opposite the permanent magnet, no mutual opposition takes place. Induced flux (**c**) caused by the generator load current remains present; however, inducing flux from the permanent magnets (**b**) is not present since no magnet is present, on this side, to provide the necessary flux. This leaves the induced flux (**c**) encircling the hole, as well as input flux (**a**) from the input coils **6**, continuing its path along the core, on either side of each hole.

On the side of each hole in the core where a magnet is present, action (**b**) and reaction (**c**) magnetic flux substantially cancel each other, being directed in opposite directions within the core. On the other side of each hole, where no magnet is present, input flux (**a**) and reaction flux (**c**) share a common direction. Magnetic flux adds together in these zones, where induced magnetic flux (**c**) aids the input flux (**a**). This is the reverse of typical generator action, where induced flux (**c**) is typically opposing the “input” flux originating the induction.

Since the magnetic interaction is a combination of magnetic flux opposition and magnetic flux acceleration, there is no longer an overall magnetic braking or total opposition effect. The braking and opposition is counterbalanced

by a simultaneous magnetic acceleration within the core. Since mechanical motion is absent, the equivalent electrical effect ranges from idling, or absence of opposition, to a strengthening and overall acceleration of the electrical input signal (within coils **6**). proper selection of the permanent magnet (**1**,**2**) material and flux density, core **3** material magnetic characteristics, core hole pattern and spacing, and output medium connection technique, create embodiments where the present generator will display an absence of electrical loading at the input and/or an overall amplification of the input signal. This ultimately causes less input energy to be required in order to work the generator. Therefore, as increasing amounts of energy are withdrawn from the generator as output power performing useful work, decreasing amounts of energy are generally required to operate it. This process continues, working against the permanent magnets (**1**,**2**) until they are demagnetised.

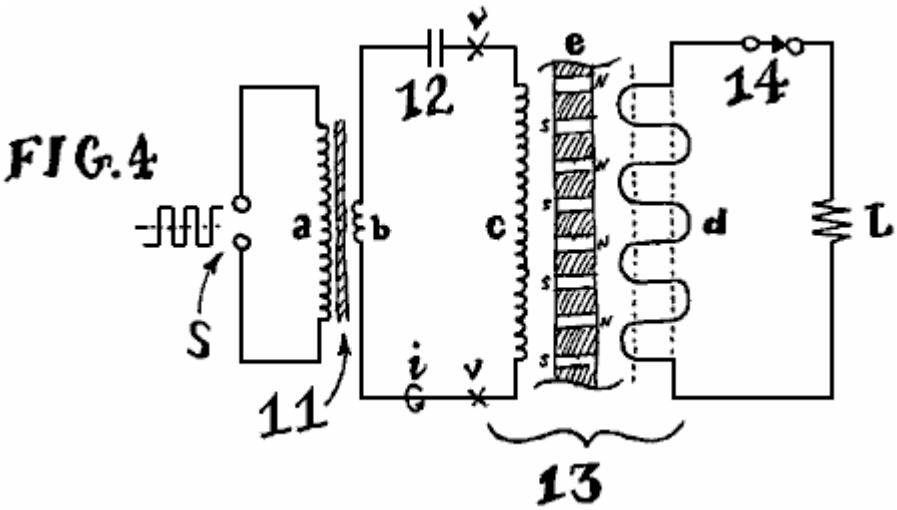

In an embodiment of this invention, **Fig.4** illustrates a typical operating circuit employing the generator of this invention. A square-wave input signal from a transistor switching circuit, is applied at the input terminals (**S**), to the primary (**a**) of a step-down transformer **11**. The secondary winding (**b**) of the input transformer may be a single turn, in series with a capacitor **12** and the generator **13** input coil (**c**), forming a series resonant circuit. The frequency of the applied square wave (S) must either match, or be an integral sub-harmonic of the resonant frequency of this 3-element transformer-capacitor-inductor input circuit.

Generator **13** output winding (**d**) is connected to resistive load **L** through switch **14**. When switch **14** is closed, generated power is dissipated at **L**, which is any resistive load, for example, and incandescent lamp or resistive heater.

Once input resonance is achieved, and the square-wave frequency applied at **S** is such that the combined reactive impedance of total inductance (**b** + **c**) is equal in magnitude to the opposing reactive impedance of capacitance **12**, the electrical phases of current through, and voltage across, generator **13** input coil (**c**) will flow 90 degrees apart in resonant quadrature. Power drawn from the square-wave input energy source applied to **S** will now be at a minimum.

In this condition, the resonant energy present at the generator input may be measured by connecting a voltage probe across the test points (**v**), situated across the generator input coil, together with a current probe around point (**I**), situated in series with the generator input coil (**c**). The instantaneous vector product of these two measurements indicates the energy circulating at the generator's input, ultimately shifting the permanent magnets' fields in order to create useful induction. This situation persists until the magnets are no longer magnetised.

It will be apparent to those skilled in the art that a square (or other) wave may be applied directly to the generator input terminals (**c**) without the use of other components. While this remains effective, advantageous re-generating effects may not be realised to their fullest extent with such direct excitation. Use of a resonant circuit, particularly with inclusion of a capacitor **12** as suggested, facilitates recirculation of energy within the input circuit, generally producing efficient excitation and a reduction of the required input power as loads are applied.

Mark McKay's Investigation of Edwin Gray's Technology: Part 1

Enter…. The Mallory Connection Mark McKay, PE 3/2/06

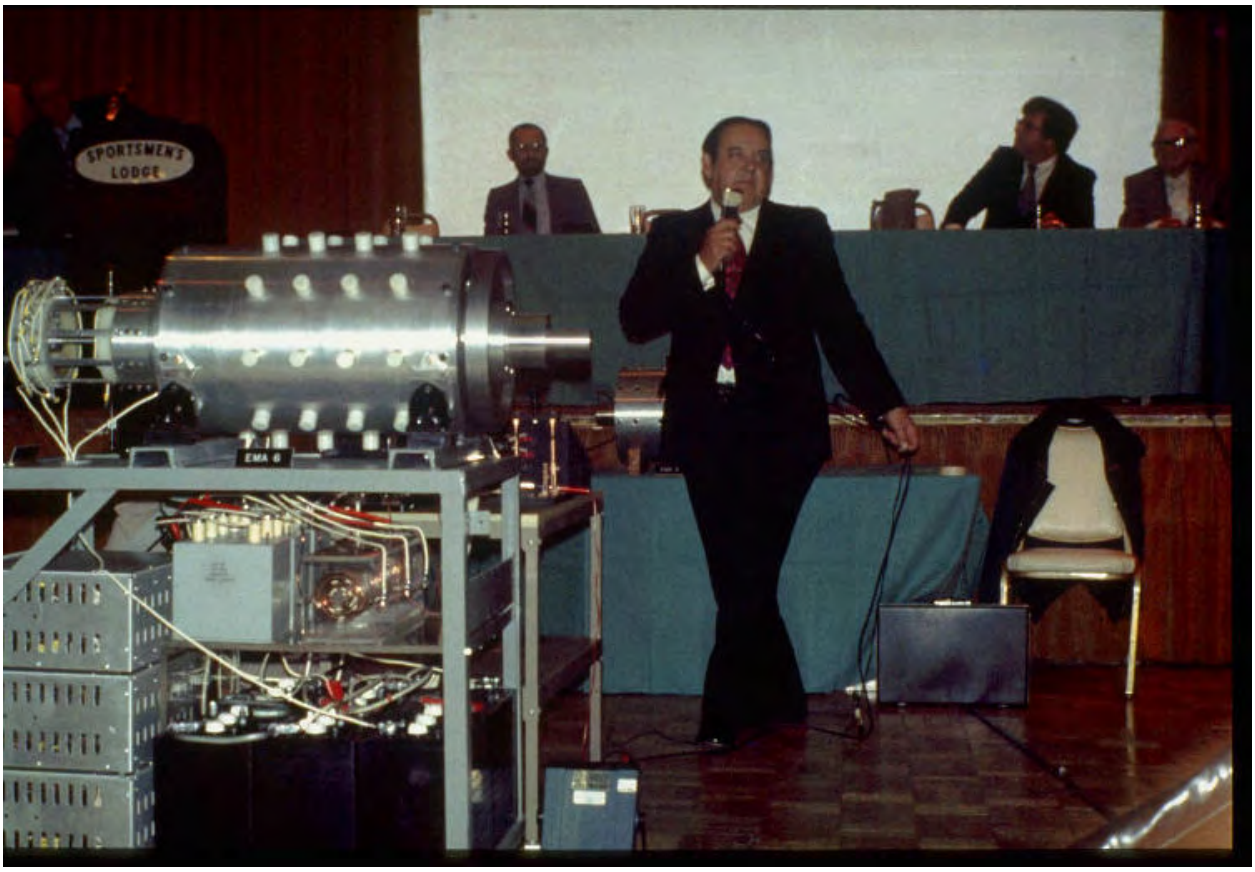

E.V. Gray Version 2.0 type Motor EMA6 1977 – Courtesy Dr. Peter Lindemann

Consider the now classic 1977 photo (above) of Mr. E.V. Gray demonstrating his EMA6 motor to investors at the Sportsman Lodge in Burbank, CA. This photo was taken by Tom Valentine, who wrote a series of informative articles about the EV Gray saga. Dr. Peter Lindemann received this original film from Mr. Valentine to support Peter's research for his book "The Free Energy Secrets of Cold Electricity".

In a fruitful attempt to extract additional technical information from this historical photo Dr. Lindemann arranged to have it digitally enhanced. One of the goals of this effort was to decipher the writing on the large gray storage capacitor directly under the motor. It read:

MALLORY
MADE IN U.S.A.
TYPE TVC-606
5.0 MFD 5000 VDC

Mallory is a well known name in the field of electronics. When one thinks of Mallory today they generally think of the premium large blue electrolytic filter capacitors that dominated the high end linear power supply market in the 70's and 80's. At its peak, the P.R. Mallory Company was a power house of US made electrical components. Not only did they make several lines of capacitors but they also made Battery Chargers, Resistors, Rheostats, Rectifiers, Switches, UHF Converters, Noise Filters, Soldering Iron Tips, and Special Television Components. Their 1955 Catalog was 60 pages long.

Mr. P.G. Mallory started out in 1916 with the invention of the Mercury Battery. By 1965 the company developed the well known Duracell Alkaline battery.

The North America Capacitor Company (NACC) is headquartered in Indianapolis, Indiana. Today, NACC continues to manufacture and market Mallory capacitors at its modern manufacturing and warehouse facilities located in Greencastle, Indiana and Glasgow, Kentucky

Mallory Capacitors and Duracell Batteries from Author's Experimental Parts Reserve

Another important Mallory invention, very relative to the EV Gray technology, was the 1920's development of the "Elkonode", better known back then as simply the "vibrator". Today this device is hardly known at all. In its time it served as a vital sub-system in early DC converters. These were used to raise the low voltage levels of storage batteries to the operating levels required by vacuum tubes, which was 200 to 500 VDC. This now forgotten electro-mechanical component was the functional equivalent of two push-pull power transistors in a modern

switch-mode power supply. At the time, when it came to mobile electronics there were two choices. 1) A vibrator based power converter, or 2) A heavy dynamo-motor base converter. For applications under 30 watts the vibrator approach was smaller, lighter, cheaper, and more efficient than the alternative. Therefore, the military had a serious interest this technology, but it was in the mass market demand for small vacuum tube car radios where the real money was made.

The P.G. Mallory Co. almost completely dominated the top end power vibrator market for 40 years and was responsible for almost all of the performance improvements through the 40's and 50's. But, all good things must end. This lucrative product line came to a screeching halt in 1957 with the development of low voltage signal and power transistors. But Mallory still managed to keep a cutting edge in many of its other market areas for several years after that.

So, it is no big surprise when one reads in the 1973 Scagnetti EV Gray article:

The Engine that Runs Itself

By Jack Scagnetti from `Probe The Unknown' in June 1973.

"Mallory Electric Corporation of Carson City, Nevada, has also made a major contribution toward the design of the electronic pulsing system."

It's all pretty obvious that Mr. Gray had a huge investment in Mallory type components. If his invention did become main stream then the Mallory Co. would have had first shot at a huge new automotive market. Each new vehicle would need between $300 - $600 worth of rugged HV storage capacitors, not to mention an investment of twice that much for vibrator power converters or their equivalent solid state replacements, which Mallory made also.

It is real easy to see how Mr. Gray could have convinced a few executives at Mallory how it would be in their best interests to help him out financially, or at least provide him with a little hardware donation from their Vibrapack division in Irvine CA. Mr. Grays impressive "hands-on" demonstrations were known to be very effective at convincing technical professionals that he was on to something big, providing that he was ever allowed the opportunity to make such presentation to a real decision maker. Most likely some inspired and insightful 3rd level staff person managed to fix him up with a pickup load of surplus vibrator converters that were, or would be, completely obsolete.

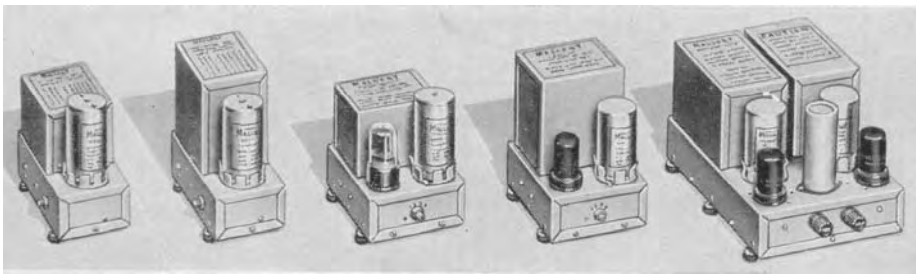

Examples of the P.R. Mallory line of "Vibrapacks" (DC Converters) from 1955 Catalog

All models have a 30 Watt power rating except the one on the far right which is rated at 60 Watts

But this story has an important twist in it……..

The Mallory Company that gave Mr. Gray enough money to make mention of it in the above magazine article was not the P. G. Mallory & Company Inc. but the Mallory Electric Company of Carson City, Nevada, designers and manufactures of a multitude of OEM and after-market automotive ignition systems.

A Small Sample of modern Mallory brand name After Market Ignition Products 2006

Mr. Marion Mallory was the rare sort of independent individual who would start a company on Friday the 13th in February of 1925. He was a self-made inventor with a 4th grade education who was not only brilliant at his craft but also had what it takes to manage a business. If he ever met Mr. Gray face to face the two men would have had a lot in common, especially from a “hands-on” creative energy standpoint. Mr. Mallory made his money in a variety of automotive, motor cycle and marine ignition systems. For years he was the main supplier to the Ford Motor Company for ignition distributors and their upgrades. He received about 30 US and 10 international patents for a multitude of significant improvements in ignition technology, both in electrical and mechanical systems. He

was darn good at business, but his personal weakness was high performance auto racing. The market for race car parts is not very big, but the activity it supports is very addictive. Marion sponsored as many as three teams a year in the various classes of professional auto racing. It is also been said that Mr. Mallory looked for and hired like minded creative engineers and technicians. He also despised the union worker mentality that had become so adversarial in the Detroit area between the 50's and 60's.

Mr. Mallory finally got fed up with the stifling and counter-productive demands of the United Auto Workers Union. In a rare act of individualism he decided to make arrangements to move his entire company, lock, stock and, ignition coils to Carson City, NV. At this time Marion was getting along in years and unfortunately never made the move. He died in 1968 at the age of 70. His son 'Boot' Mallory was then handed the reins of this privately held company. 'Boot' terminated all the Union labor and kept 10 of the most productive engineers and technicians who were willing to relocate to the new factory. This facility was opened in 1969. From all accounts the "heir apparent" and only son was very motivated, technically competent, savvy at business, and like his father hopelessly addicted to high performance auto racing.

Given the timing of events it is most likely that Mr. Gray never met Marion Mallory. It is almost certain that the connection to the Mallory Company was entirely between Mr. Gray and 'Boot' Mallory. This was also helped by the fact these two men were about the same age with Mr. Gray being 5 years older.

For their entire business careers Marion and 'Boot' Mallory were always on the look out for improved ignition systems, both for good business practice and, of course, a desire to sport the fastest cars at the race track. Their knowledge base and field experience covered all approaches to ignition system design, both in the electrical and mechanical areas. It is interesting to note that they developed and manufactured magneto systems as well as traditional distributor systems. Understand that these two technologies are vastly different to each other.

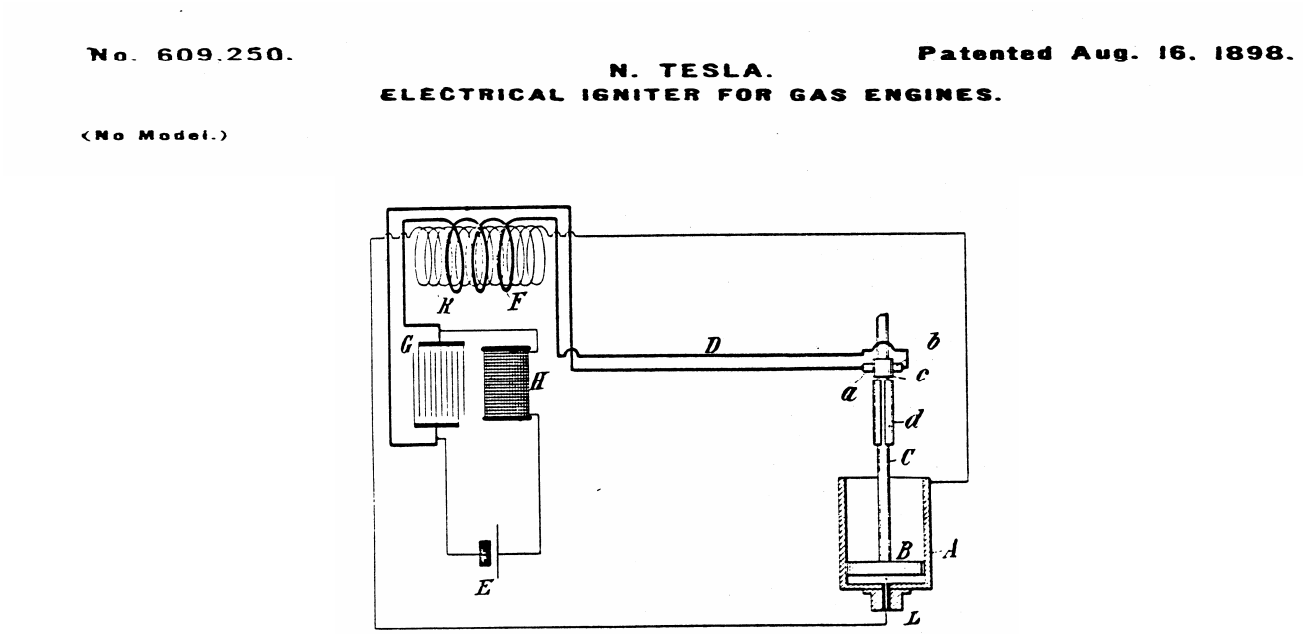

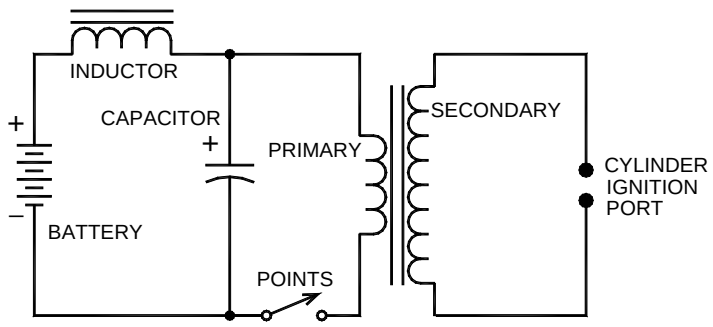

SCHEMATIC FOR TESLA'S "ELECTRICAL IGNITER FOR GAS-ENGINES"
US PATENT 609,250 AUGUST 1898
FIG. 7 (From The Complete Patents of Nikola Tesla)

In the auto racing circles it has always been known that capacitive discharge ignitions system are far superior to the limitations of the standard Kettering induction system, especially at high RPM. Dr. Tesla patented the first CD ignition system as early as 1898 but it was never produced because of serious design and component limitations. Marion Mallory and his engineers did get a working capacitive-discharge system finally connected to a race car engine in 1948. This first design was built employing a thyratron gas tube and vacuum-tube circuitry. As a result, it was costly, bulky, and unwieldy, not to mention fragile and economical unfeasible. But despite all of its failings the Capacitive Discharge Systems (CD) clearly showed its superior performance in the laboratory and on the track. Had it not been for the random and sudden failure of these alpha-test units (because of vibration) they might have still been used in professional auto racing, regardless of their unit cost.

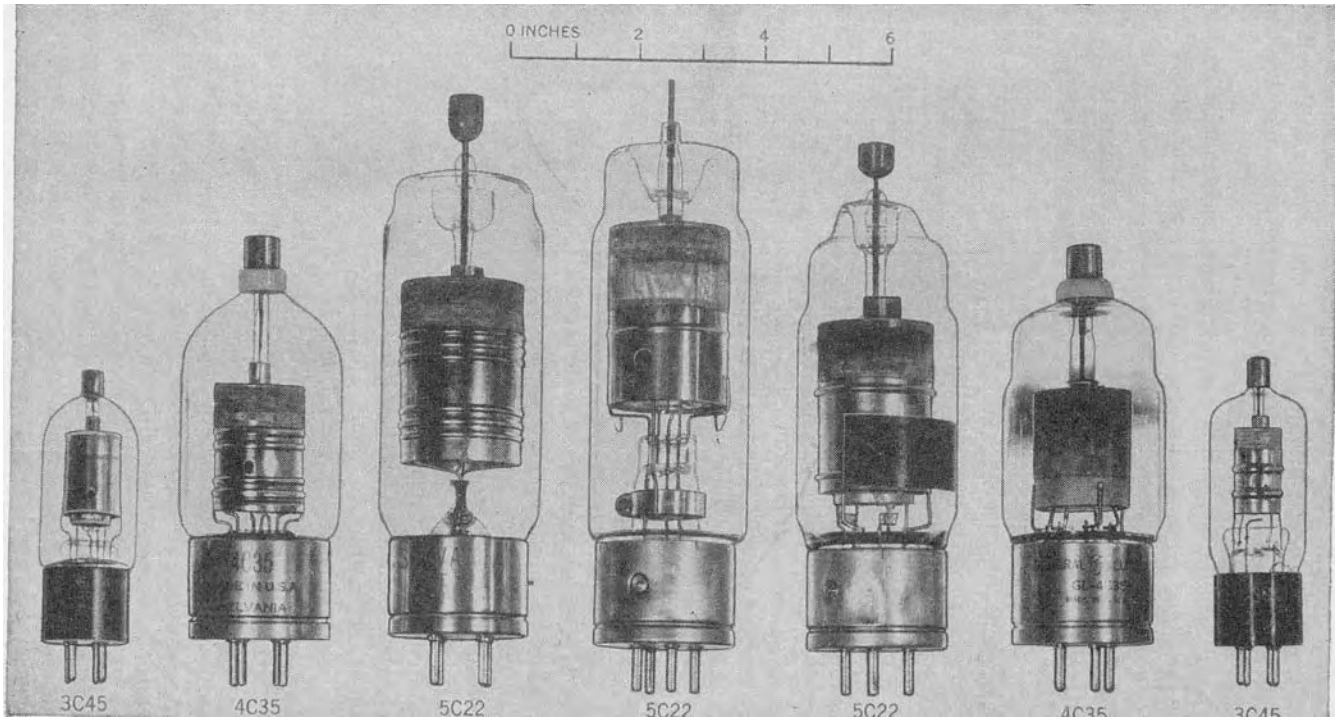

Glass Hydrogen Thyratrons of the 40's
From "Pulse Generators" Radiation Laboratory MIT 1948

Two new technologies were needed to get CD systems off the ground.

1) Some method to boost the 6 or 12 V DC storage battery voltage to the 400-500 Volt range with an available current of at least 100 mA. (40-50 Watts)

2) A component or technique that would replace the bulky, fragile, and power hungry thyratron that acted as the master timing control switch.

Street/Strip Race HyFire® VI
Multi-Strike CD Ignition

HEI/EST Performance Coil

Both solutions came along about the same time. Power transistors became available to the aerospace industry in 1954. These allowed the development of early push-pull switched mode power supplies whose output were way beyond what a mechanical power vibrator could deliver (up to 90 Watts initially). Complete transistor converters were available to the hobbyist in early 1958. So we can assume that prototype power transistors were available to industry in about 1955.

Early advertisement for a 90 Watt (pulsed) Hobbyist 12V to 450V DC Converter
From “QST” magazine January 1958
(Notice size reduction when compared to the 60 Watt Vibrapack)

The second critical breakthrough came with the invention of the Thyristor or Silicon Controlled Rectifier (SCR) by Bell Labs in 1957. General Electric quickly bought the rights for this promising technology and wasted no time in bringing it into production. The manufacture of solid state power rectifiers and transistors was already well underway, so, building an SCR using the existing production equipment was a slam-dunk. According to the GE SCR Handbook 1964 3rd edition, the model C35 had already been in the field since 1958.

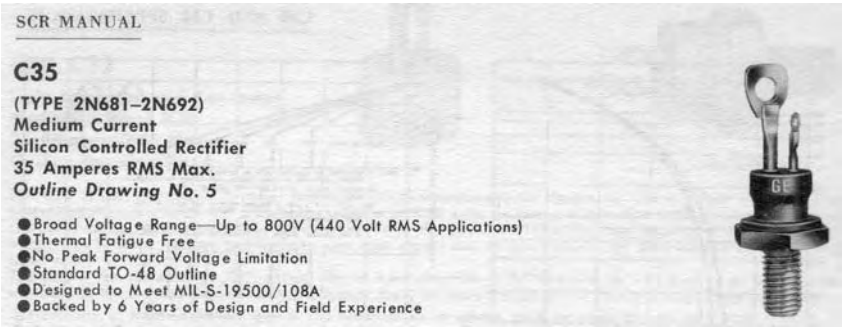

Silicon Controlled Rectifier available to Industry and Military in 1958

With these new solid state components at hand Marion & ‘Boot’ Mallory were off and running. Their first beta-test race track CD ignition system was introduced in limited quantities in the fall of 1961. Their first after market production models did not reach distributors until 1964. It took 3 years of detailed development and waiting for the SCR market to settle down before deciding on a final production design. While the basic operating principles of a CD ignition circuit is straight forward getting a long-life circuit that will function well when exposed to the temperature, voltage, and vibration extremes is a different matter. At that time in our country’s industrial heritage new products were not generally rushed, half-baked, to the re-sellers because of some imaginary dead-line imposed by the bean-counters in the marketing department.

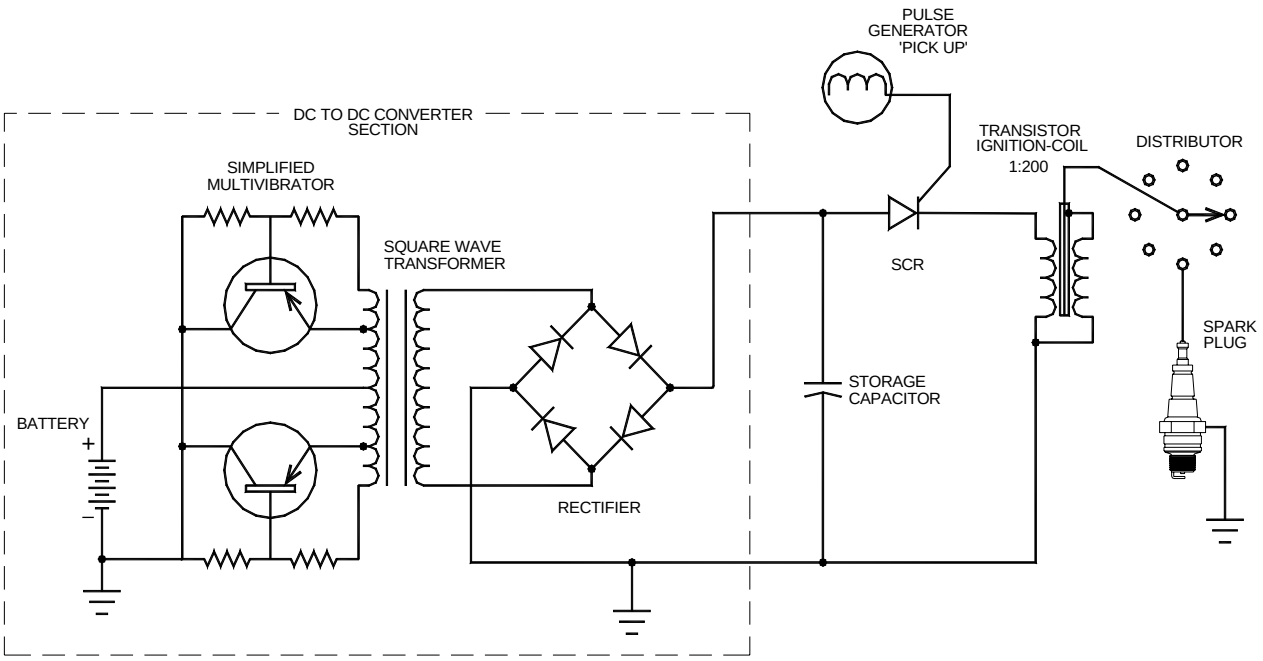

SIMPLIFIED SCHEMATIC OF CAPACITIVE DISCHARGE SYSTEM
CICRA 1975 TO PRESENT
(From Tektronix - Engine Analysis Measurements 1970)

So, in the timeframe of 1960 to 1970 where could Mr. Gray have gone when he needed some rare applied technical expertise on battery operated High Voltage pulse systems? The solution seems almost obvious.

We have no doubt that Mr. Gray and 'Boot' Mallory were on a first name basis. They may have already developed some kind of relationship while the company was still in Detroit, we don't know when they first got together. We do know that Mr. Gray was provided with some significant venture capital along with the fruits of 10 or so years of proprietary field tested solid state CD technology.

It has been pointed out, by knowledgeable sources, that all of the Mallory's after market ignition systems used power transistors for the 6-12V to 450V converter section. So, we wonder, why was Mr. Gray still using obsolete vibrator packs in 1973? 'Boot' would have certainly supplied Mr. Gray with the most modern equipment, along with the SCR and Ignition-Coil components in a small, self contained, custom engineered, and de-bugged package.

We suspect that 'Boot' did provide these complete transistorized CD systems and that Mr. Gray was eagerly looking forward to the reduced size, increased life time, and improved efficiencies that the new solid state devices promised. Especially after having to constantly fight with vibrators that kept burning out during his trial runs. But, Radiant Energy (RE) generation has its own special challenges to deal with. One major engineering issue is what to do with the Electro Magnetic Pulse (EMP) like effect that happens when a RE circuit reaches a certain power level. If all that excess energy is not properly shunted to the system common (hopefully after doing some serious work) it escapes from the circuit conductors to charge every metal object within 20' or so of the generator. A multitude of blue-white sparks will erupt from every metallic object in a room, due to the induced high voltage. This is certainly an interesting light-show, with the lights turned off, but devastating to any near by transistor or IC that has any amount of wire connected to it. Transistors and IC's that are stored in metalised protective bags or boxes seem to survive.

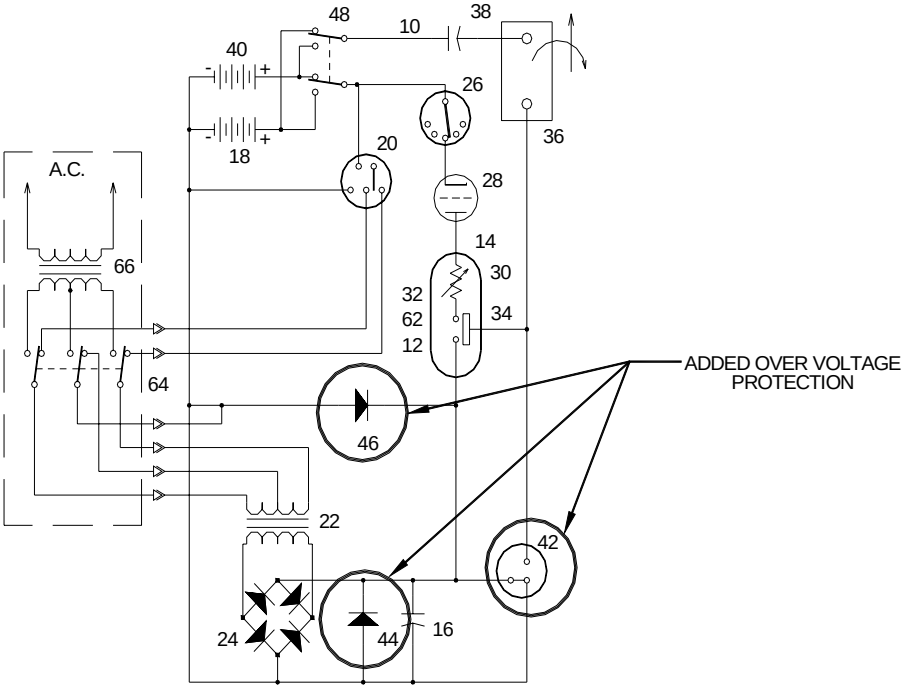

THE GRAY CIRCUIT PER PATENT 4,595,975
JUNE 17, 1986

If this was the case, then we can imagine how disappointed Mr. Gray might have felt when his new transistorized converters started to fail, perhaps even catastrophically. Fortunately, and **we really mean very fortunately,** the SCRs were able to survive the RE onslaught. Had this not been the case the EV Gray technology, because of the constant system failure, would have seriously fallen on its nose by 1965 and never have been able to produce the demonstrated power levels that we would so very much like to recreate. Transistors, fail because they are constructed with super thin base structures that are sensitive to moderate voltage differences. SCRs are constructed with thick silicon layers that are relatively more rugged. However, a poorly designed trigger circuit in an RE application will still destroy a heavy duty SCR, if proper gate transient protection methods are not employed. Because of this first hand experience Mr. Gray went on to install many over-voltage protection devices in his future circuits. This is very apparent in the design of the power supply shown in his Conversion Tube Patent #4,595,975.

It appears that Mr. Gray was forced to go back and use the failure prone obsolete vibrator packs that he started out with. According to the first patent these were used for the primary DC voltage conversion. We suspect that the engineers at Mallory were enlisted to help Mr. Gray marry the vibrator pack to the SCR system. The SCR addition did help solve the failure problem by reducing the arching current across the vibrator contacts. This is not a straight forward interface and it requires some experienced electronic know-how. The challenge is balancing the limited current capacity of the vibrator to the low impedance of the SCR storage capacitor.

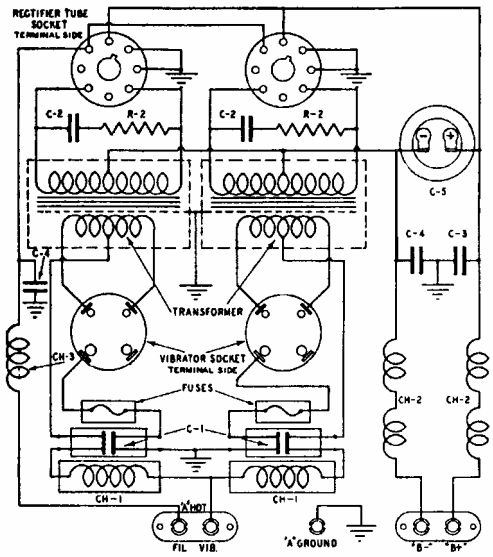

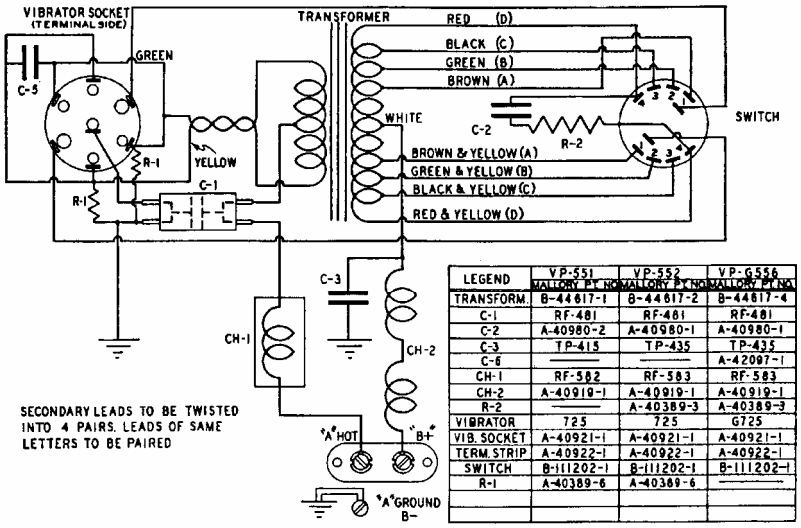

LEGEND	VP-551 MALLORY PT. NO.	VP-552 MALLORY PT. NO.	VP-G556 MALLORY PT. NO.
TRANSFORM.	B-44617-1	B-44617-2	B-44617-4
C-1	RF-481	RF-481	RF-481
C-2	A-40980-2	A-40980-1	A-40980-1
C-3	TP-415	TP-435	TP-435
C-6	———	———	A-42097-1
CH-1	RF-582	RF-583	RF-583
CH-2	A-40919-1	A-40919-1	A-40919-1
R-2	———	A-40389-3	A-40389-3
VIBRATOR	725	725	G725
VIB. SOCKET	A-40921-1	A-40921-1	A-40921-1
TERM. STRIP	A-40922-1	A-40922-1	A-40922-1
SWITCH	B-111202-1	B-111202-1	B-111202-1
R-1	A-40389-6	A-40389-6	———

FIG. 28—SCHEMATIC WIRING DIAGRAM FOR VIBRAPACKS
Nos. VP-551, VP-552, VP-G556

Schematic Wiring Diagrams for two P.R. Mallory Vibrapacks
60 Watt model on the left – 30 Watt model on the right

Other researchers contend that Mr. Gray never intended to use transistors in the first place. This is because one RE theory states that the non-classical process begins in the minute arcs formed during the making and breaking of the vibrator contacts. This technical issue is still open for debate and experimental verification.

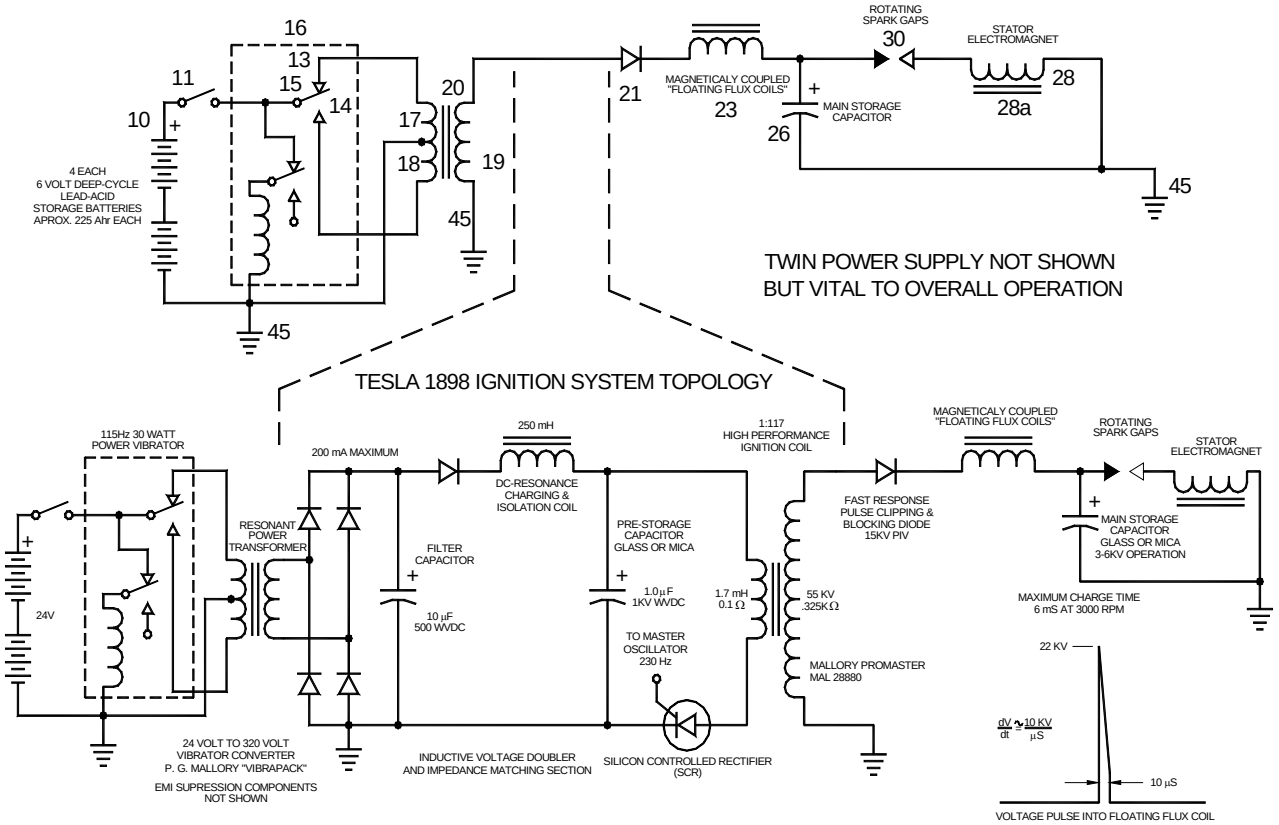

PROPOSED NON-DISCLOSED CAPACITIVE DISCHARGE SUB-SYSTEM IN EV GRAY CIRCUIT

However, we all agree that the SCR CD circuit is still a vital sub-system to the EV Gray technology, but it is not the whole story for a complete Over Unity (OU) process. We further believe that Mr. Gray didn't disclose the kernel of his "secret" to 'Boot' or any one else at the Mallory Electric Company. It would appear that 'Boot', because of his unique individualistic upbringing, respected Mr. Gray's right to his own creations. 'Boot' was obviously far sighted enough to see some greater business potential in this venture, not to mention a whole new class of future racing machines. One main reason for this enlightened attitude was that 'Boot' didn't have to contend with a short-sighted governing board of directors whose members were more worried about next quarters stock price than taking risky chances on age changing technologies.

The CD sub-system of the Gray motor was not disclosed in patent #3,890,548. Mr. Gray did mention the use of ignition coils in the patent text, but didn't show them in the schematic diagram. The simplest solution to help protect his "secret" was to just eliminate the CD sub-system from the schematic. Since Mr. Gray was only attempting to disclose a new type of pulse motor in this first patent. The omission of a "minor" power supply "feature" was not going to mean anything to the patent reviewers. But, the devil is in the details, especially when attempting to reconstruct this lost technology 30 years later.

There is a good possibility that Mr. Gray was returning a favor to 'Boot' by not disclosing the proprietary CD circuit designs. They very well could have had a gentlemen's agreement and a joint venture on this issue. 'Boot' didn't need to know Mr. Gray's Free Energy "Secret". His high margin piece of the action was locked in because each new EV Gray motor would need 18 or more complete CD power supplies, including the patented construction details of the Mallory ignition coils. Mr. Gray's success was going to be 'Boot' Mallory's success – BIG TIME. A classic win-win situation. It's no wonder that 'Boot' willingly made out checks to this unknown and un-educated inventor from California. While the P.R. Mallory Company was unknowingly going to reap some benefit from this breakthrough the Mallory Electric Company was going to hit the jackpot.

As a purely speculative observation, it may have been 'Boot' Mallory who clued Mr. Gray in on how to write patents and attempt to protect one's intellectual property form the big business lawyers. What to show and what not to show, what to draw and what not to draw and what to say the rest of the time. With this technology it was going be a feeding frenzy as soon before the first beta-test hit the street and 'Boot' knew it. Mr. Gray probably received a life time of inside information on how to keep secrets, make money, and cover one's assets from a man who had been there and seen how big business really works.

We all know that Mr. Gray suffered a major setback when his research facility was raided in 1974 by the agents of the Los Angles District Attorneys Office for suspected securities fraud. But, by 1977, as shown in the photo above, Mr. Gray had recovered enough to receive his first patent, build, debug, and demonstrate his second generation

motor. What is not generally known, in Free Energy circles, is that Mr. Gray suffered a far greater loss when 'Boot' Mallory was killed in a car wreck in 1978 at the age of 48. He was always known to be somewhat of a lead foot.

Gone was the financial, technical and morel support. As far as we can observe it appears that the EV Gray motor didn't develop significantly much beyond the EMA6 model (above). The surviving Mallory women sold the company to Super Shops of Irvine, California in 1979. Mr. Gray continued to seek a proper level of investment capital so that he could control and manufacture his fuel-less motors in-house. He also improved on his popping-coil demonstration and updated it to a continuous process that hinted at anti-gravity possibilities, very impressive. It has also been rumored that Mr. Gray almost did collect enough money to begin production.

Unfortunately, we also know that ten years later Mr. Gray died under un-resolved circumstances in Sparks, NV in April, 1989. Sparks is just East of Reno, NV which is about 50 miles North of Carson City, NV. Some researchers contend that the main reason why Mr. Gray established one of his multiple laboratories in this town was because of the invaluable technical experience of some of the retired Mallory technicians still living in the area.

We have also been lead to believe that it was 'Boot' Mallory who made the first formal introductions between Mr. Gray and the alternate car inventor Mr. Paul M. Lewis, creator of the "Fascination". You can imagine the possible creative energy that might have flowed between these three unique individuals while they were sitting around the dinner table sharing a host of far-reaching dreams and schemes.

Today, the sold and re-sold fragments of the P.R. Mallory and the Mallory Electric Company have suffered, like so many U.S. businesses, from the now common and insidious blight of globalization. Both organizations are outsourcing their manufacturing operations to China, their engineering departments to India, and their R & D efforts to Canada.

In conclusion all we can say is that this saga is truly a vital lost opportunity for the world, they were so darn close. Had this story been different we most likely wouldn't be bankrupting our country in a vain attempt to secure oil reserves in Iraq. We could have easily had permanent colonies on Mars and not be worrying about the ongoing effects of Green House Gasses. This great country could have re-invested the trillions of our oil dollars into our own economy rather than providing excessively lush life styles for a few privileged Middle Eastern clan leaders.

Note: This document is one in a series produced by Mr. McKay as part of his investigation of the work of Edwin Gray senior and he invites readers to contact him if they have any constructive comments or queries concerning the work of Mr. Gray. Mr McKay's e-mail address is mmckay@tycoint.com

Mark McKay's investigation of Edwin Gray's Technology: Part 2

Taking a closer Look at the Demonstration Equipment
October 24, 2006

This is the classic photo of E.V. Gray's "Popping Coil" Demonstration apparatus. This can be found on Peter Lindemann's web site. This photo was taken by Tom Valentine in 1973. Mr. Gray is the man in the center and Fritz Lens (his new father-in-law) is on the right. The man on the left is unidentified (most likely Richard Hackenburger VP of Engineering).

For years, about all one could say about this photo was that there was a fair amount of equipment involved in these demonstrations. The energy source appears to be a common large automotive 12 volt battery. Identifiable components are the custom made air transformer and the Triplett 630-A multimeter, all the rest of the technical detail is hidden by the black Plexiglas instrument boxes. By itself this photo does not yield much information.
In 2004 a former E.V. Gray investor came forth and presented Peter Lindemann and John Bedini with a period collection of historical snapshots. Five of these photos were of the same apparatus that was shown to Mr. Valentine in the above photo. The location was different, but the equipment and layout appears to be the same. It is assumed that these new investor photos were taken at Mr. Grays shop in Van Nuys, CA. These photos were developed in January and June of 1974 so they could have been taken within a few months of the Valentine 1973 photo. By observing these photos some additional technical information about this novel technology can be extracted.

The Investor Photos:

Investor Photo #013C
Overall View

This is a nice shot of the whole demonstration apparatus from one end of the table showing the supply battery, two popping coils and an end view of the air transformer. Despite the limited focus, this photo shows that the popping coils are connected in parallel since the white leads on the left are both terminated on the negative terminal of the battery. Also connected to the battery is a component that appears to be an analog metering current shunt - a low value high current resistor device. However, there is no meter connected to this component as there would be in a normal application. This suggests that it is being used simply as a low value current limiting resistor. It is doubtful that this component was ever intended to be used in a metering capacity. Its output would have been a very short voltage pulse that could not be recorded or observed on any of the test instrumentation shown in any of these photos.

It is believed that the two black leads on the right of the air transformer are disconnected and hanging straight down to the floor. Compare this situation to the Tom Valentine photo where these heavy black leads are connected to two of the black boxes.

There appears to be four black wires connected to the right side of the electromagnets. The two larger black wires are thought to connect to the wiper of the DPST knife switch. It is not known for sure where the small remaining black wires connect, but most likely to an additional set of electromagnets parked under the air transformer as shown in photo #013B. If so, then there probably was an accompanying demonstration that showed what would happen if additional load was added to the circuit.

Investor Photo #012D

Popping a coil with the second demonstration setup on the “Right”

This photo is taken at the same location some time earlier where the circumstances were slightly different. The small white table and its attending equipment that is shown in the future June 74 photos are not preset. This photo (Jan 74) was developed 6 months before Photo #013C. The equipment on the large table seems to be in the same relative positions. What this photo reveals is that there is a second “Popping Coil” demonstration taking place at the other end (right side) of the table.

It is proposed that this total assembly of “Black Boxes” (a dozen or more subsystems) actually supports two different and independent demonstrations, a “Popping Coil” demo on the left and another similar “Popping Coil” demo on the right. The photos available allow for a better technical analysis of the demonstration equipment on the left side of the table. It is unknown as to what the actual differences between these two demonstrations were, however it is apparent that the coils being popped have obvious size differences. In photo #012D the coil in mid air is about twice the size of the electromagnets shown at the other end of the table in photo #013C. The Tom Valentine photo shows a set of electromagnets (at rest in the lower right hand corner) that are at least four times the size of the coils used for the demonstration that was set up on the left side of the table. However, the launched coil shown above is not the same (being 50% smaller) as the coil shown in the Tom Valentine photograph, even though it is being powered by the same equipment.

It is thought that the demo on the right had something to do with a higher power level or a more advanced method of energy recovery. Most likely, the demo on the left was intended to make the initial technical introduction to the basic idea of a repulsion motor concept, while the demo on the right had some important engineering advancement to display.

Photo #012D is dark but it helps shows that the two white wires from the DPST knife switch for the left demo connect to the two equal size boxes in the middle of the table, one wire per box.

Investor Photo #013B
120VAC Power Source being explored

This June 1974 photo is a nice over view of the “left” demonstration equipment. The major issue here is the additional equipment on the small white table. Here we see some identifiable items, a neon transformer, a 2KW Variac autotransformer, a cassette tape recorder and a barrier type terminal strip. The question is: What is this extra stuff for?

It appears that this setup is a variation from the normal equipment demonstration as seen in the Tom Valentine photo. It seems that the Air Transformer is disconnected from the system and has been replaced by the power provided by the equipment on the white table. Most likely this was an attempt to demonstrate that AC line power could be converted to “Cold Electricity”. It is important to note the variations in this particular circuit layout as it provides some clues as to the function of the various Black Boxes.

First, notice that the two white wires that go to the DPST knife switch have now been connected to one terminal of the black box, while a red jumper connects to the white wires’ previous connection point. Compare this to how these white wires are connected in the Tom Valentine photo.

It is not all together clear how the Neon transformer and Autotransformer are connected but a standard approach would be to have the Variac control the input line voltage to the Neon transformer. This Variac has the ability to increase its output voltage by 25% above its input. If this Neon transformer were a common 15KV 30 mA unit then the RMS output voltage could have been adjusted to a maximum of 18 KV. This is comparable to the output of an auto ignition coil. The peak DC voltage potential would have been about 25KV. However it is unlikely they were operating at this high of voltage for very long because of the size, layout and construction of the temporary conductors.

Since a single pair of conductors (yellow and black jumpers) drop below the top of the white table it is proposed that there is a high voltage diode stack underneath the table on a shelf that is operating in half-wave mode. Had full-wave mode been used then four wires would be seen leaving the top of the table (which is still a possibility).

The utilization of DC pulses is very clear in the Gray motor patent. It has often been wondered why Mr. Gray didn’t use full-wave rectification in his power supply to take advantage of the increased efficiency. Apparently this equipment does not have a taste for straight DC voltage. This concept is reinforced by the use of the half-wave rectification power supply shown in photo #013B. This situation supports the idea that Mr. Gray may have had

capacitors connected in series, without equalization resistors, thus pulsating DC would have been needed to charge them.

Photo #013B shows the best view of the demonstration equipment for the “Right” demonstration. It seems to be composed of five Black boxes, two small ones, two large ones, and one small flat one. If a knife switch was used to launch the popping coil it is not visible in these photos. An air transformer seems to be missing from this equipment collection. However, consider the cylindrical object seen under the large table in photos #012D and #013D. This is about the size of a gallon paint can and has yellow tape on top. Three black wires (and possibly a fourth) can be seen leading to this device. It is proposed that this is the air transformer used for this equipment. It has a larger diameter (8”) than the air transformer that is used for the “Left” demonstration (4”). It is believed that the automotive battery seen at the left end of the large table is the prime source of power for both demonstrations. A Triplett 630-A multimeter can be seen laying down on the far right of the table.

Examine the air transformer in its disconnected configuration. Notice how the two black conductors roll off the coil to the floor. This can only be achieved with two separate layers. The nearest conductor is part of the first layer. From this observation the relative polarity of the air transformer can be determined.

The core of the air transformer appears to be about 4” in diameter, when compared to the 2”x4” support blocks. It appears to be of a dual layer construction like one kind of pipe was slipped over another. The inner pipe resembles gray electrical PVC, but thinner (could be schedule 20 pipe). The outer pipe is a dark brown material that is not a common modern construction material. It is closer to an older fiber-composite material that was used for sewer pipe in the 50’s. Why the need for two nested cores? Is the dielectric breakdown of the core that big of an issue for such a small air transformer? The insulation strength of the (assumed) spark plug wire is near 50KV and should be plenty for the operating voltages expected. In addition there appears to be a hefty layer of electrical black tape between the core and the heavy windings.

It has been proposed that the black tape covers a single layer of #16 AWG magnet wire that forms a winding 3-4 times longer than the observed spark plug wire “primaries”. This feature (if it exists) is considered to be an additional energy recovery subsystem.

Investor Photo #013C
Group Photo Session

This photo is too fuzzy to extract much additional detail, (as compared to photo #013C) however the 35mm camera that is being held by the gentleman on the right is clear enough. Also, note the Flash Cube snapshot camera sitting beside the autotransformer. Cameras are in abundance in this portrait. This suggests that this particular collection of photos (June 74) were the result of a planned event where selected investors were allowed take all the snapshots they wanted. It is believed that this was a rare event. Therefore we can be assured that the equipment displayed at this time had been personally sanitized by Mr. Gray to insure that none of the essentials of his “Secret” would be disclosed.

The well dressed gentleman, on the left, appears to be holding another cassette tape recorder with a black plastic microphone being held in his fingers.

Investor Photo #013D

Count the Turns on the Air Transformer

This is about the best photo available showing the overall layout of both coil popping demonstrations. A lot of the essential details are hidden in this presentation but some of the subsystem interconnections can be determined.

The lower shelf of the white table displays what appears to be a HV “door knob” capacitor that is connected to Yellow and Black jumpers. It is more likely that this is a HV diode.

Note: This document is one in a series produced by Mr. McKay as part of his investigation of the work of Edwin Gray senior and he invites readers to contact him if they have any constructive comments or queries concerning the work of Mr. Gray. Mr McKay’s e-mail address is mmckay@tycoint.com

Mark McKay's investigation of Edwin Gray's Technology: Part 3

Secrets of the EMA4 and EMA5 Control Commutators (Still Unresolved) Mark McKay, PE

While the technical revelations provided by the disassembly of Mr. Gray's custom electromagnets is important, the observations collected from the EMA4 and EMA5 control commutators are even more interesting (and perplexing).

Prior to the recovery of the EMA4 & EMA5 it was thought that the attached white cylindrical device on the back end of the EMA6 was a simple rotary positional timing commutator device. According to patent 4,595,975 a commutator like device was included in the schematic diagram. It appeared to be some kind of mechanical rotary switch that controls timed pulses of power to flow through the anodes of the CSET. So when the patent and the photos are examined together the arrangement seems plausible.

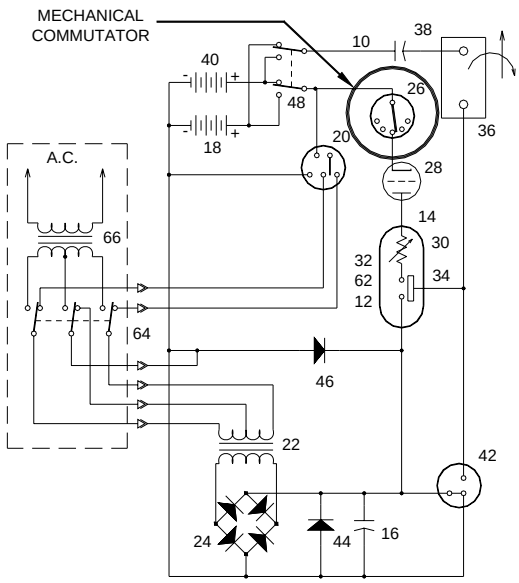

THE GRAY CIRCUIT PER PATENT 4,595,975
JUNE 17, 1986

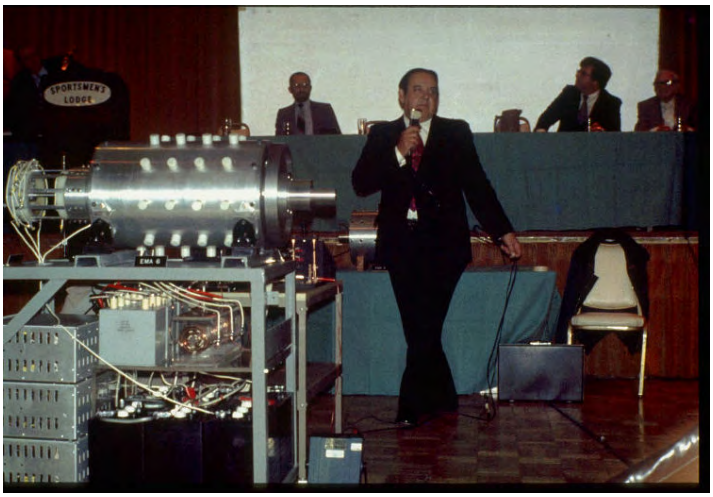

The EMA6 – with Control Commutator on extreme Left Stripped down EMA4 motor on back table

As it turns out the EMA4 and EMA5 motors revealed a much more complex component for researchers to consider. These commutators were constructed in such a way that they contained way more contacts than what would be needed for simple positional feedback. The units that came with each motor were designed to be pretty much the same, however they were wired differently. More control wires were utilized with the EMA5 than with the EMA4. This would be consistent with the fact the EMA4 only had one electromagnet pair to pulse while the EMA5 had three. The EMA5 commutator used 9 of its 15 contacts and was connected with 7 control wires. The EMA4 commutator also used 9 of its contacts but was only connected with 3 control wires.

EMA4 and EMA5 Motors at the time of recovery in 2000
With external Control Commutators mounted on the right

An examination for wear on the commutator contact surfaces, from possible arcing and heating, showed almost no signs of degradation. The conclusion reached from this observation was that whatever energy passed through these devices must have been at a very low level. This being at least two or three orders of magnitude less than what would be needed to pulse all the stator and rotor coils at once. Estimated classical current levels of less than 1 mA at 200 Volts have been proposed as being an upper limit. Mr. Wooten examined these motors from a mechanical point of view, using his professional expertise, and reported that each motor appeared to have logged at least several hundred hours of operation. Yet, you would never conclude that much use by looking at the contact surfaces alone. It is possible that the commutators may have been replaced, prior to being taken out of service, but that is a long shot.

Norman Wooten displaying the Non-Disclosed Complexities of the Timing Commutator from the EMA5 Gray motor at the 2001 KeelyNet Conference[5] – Courtesy Dr. Peter Lindemann

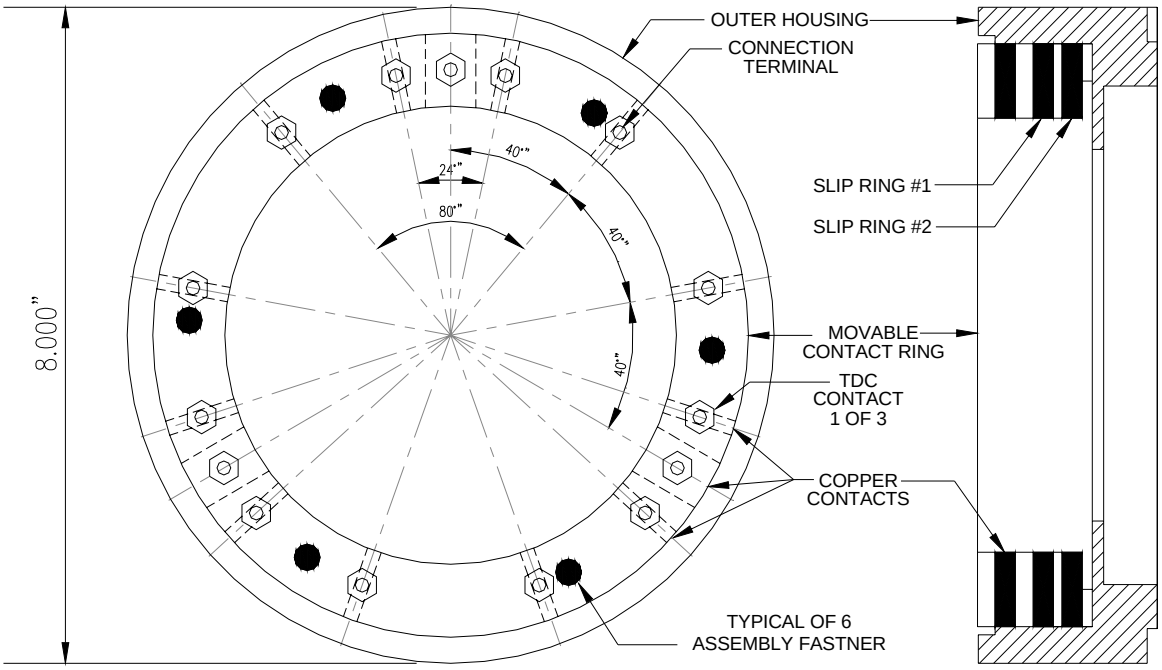

EMA4 CONTROL COMMUTATOR

Observing the lack of wear, the new belief is that the commutators were providing both control timing and positional signals to Mr. Gray's energy converter. They were defiantly not directly switching the prime power that went to the stator and rotor coils. Further more, these timing signals were more complex than ever thought. In the recovered motors the commutator section and the motor electromagnets were wired independently.

Observing the lack of wear, the new belief is that the commutators were providing both control timing and positional signals to Mr. Gray's energy converter. They were defiantly not directly switching the prime power that went to the stator and rotor coils. Further more, these timing signals were more complex than ever thought. In the recovered motors the commutator section and the motor electromagnets were wired independently.

There are 15 contacts and two independent aluminum slip rings in each commutator subassembly. Three of these contacts are rectangular (1/4" x ¾") copper bars that are three times wider than the remaining ¼" diameter copper rod contacts. For both motors there appears to be two general timing patterns that emerge when looking at the angular spacing relationships of these contacts.

1.) The three large rectangular contacts and 6 of the smaller contacts are equally spaced 40° apart from each other around the circumference of the mounting ring. These would provide a continuous evenly spaced train set of short timing pulses, proportional to the speed of the motor, with every third pulse having three times the pulse width of the others. But, this is not what has been wired to go to the energy converter.

2.) There is also a repeated pattern with three clustered contacts. This group is composed of two small and the one large contact. These seem to be related to the "firing" of the electromagnets when the wiper is about 6° past TDC.

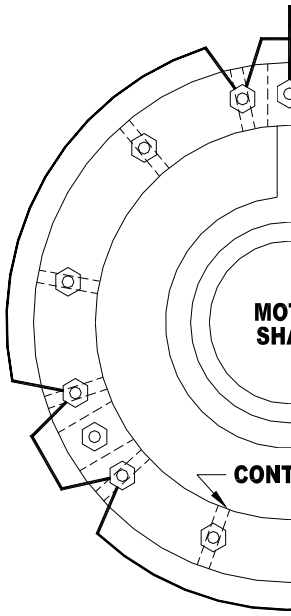

EMA4 COMMNETAT

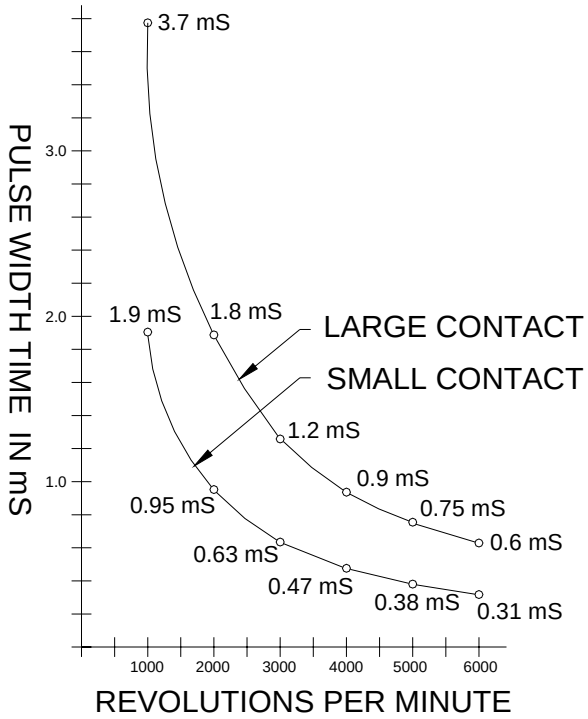

EMA4 COMMENTATOR
EQUILIVANT CIRCUIT

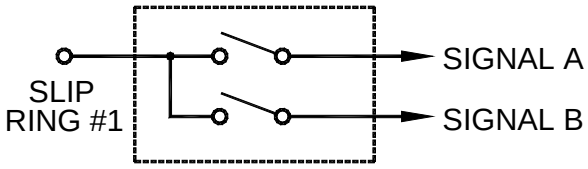

EMA5 COMMENTATOR
EQUILIVANT CIRCUIT

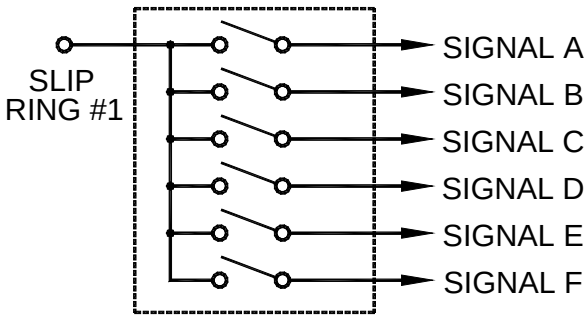

The rotary aluminum shaft wiper houses a spring loaded metallic "brush" that connects each contact to the slip ring in a sequential order. A second aluminum slip ring was installed, but was not utilized

in the EMA4. If the slip ring were considered a circuit common then the timing pattern shown in Diagram 01 would be the result. Again not all of the contacts were used in either motor. This is indeed puzzling. Apparently different circuit configurations were being planned that might have used all these contacts.

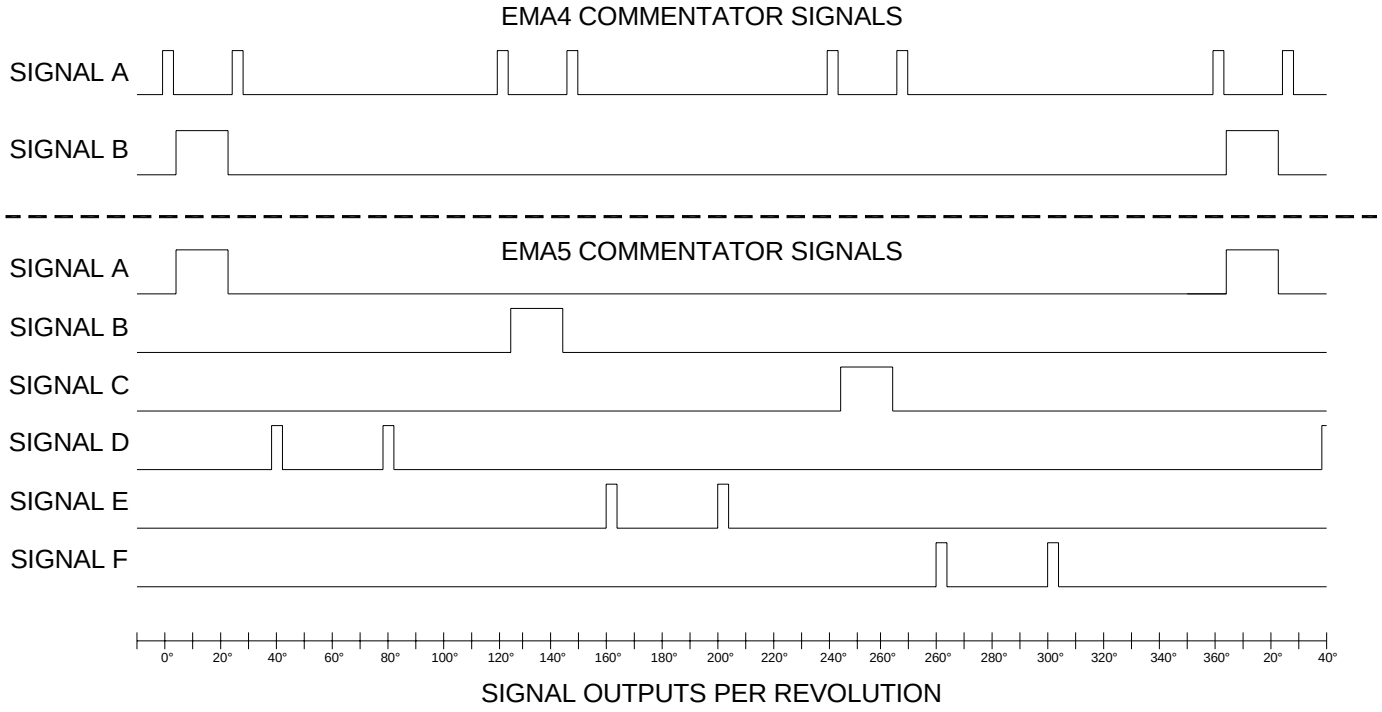

Timing Diagram 01 for Control Commutators for the EMA4 and EMA5 EV Gray Motors

Mr. Gray used a construction technique that is not generally seen in rotary equipment. There are three slip ring assemblies used in each of these two motors. One assembly is used in the commutator subassembly and has two slip rings sharing a common wiper. The other two slip ring assemblies are used to conduct pulse power through the rotor electromagnets. One is in front and the other is in the back of the motor. All three of these slip ring assemblies have an uncommon internal design. This is because the wiper and “brush” are rotating around the inside of a stationary slip ring. This is just the opposite to 98% of all other industrial machines in the world that use slip rings. Almost always, the slip rings are attached to the rotating shaft and the contacts or “brushes” are stationary. The obvious advantage of this common approach is that it allows the brushes to be easily replaced when they wear down. Another important advantage is that the “brushes” can easily accommodate some imperfections in the roundness of the slip rings that rub against them. This is because the brushes are mounted in spring loaded holders that allow them to move back and fourth. However, in Mr. Gray’s design, a brush or wiper replacement would require way more disassembly. Also, it doesn’t appear that this design could allow for nearly as much deviation from tolerance as the standard brush and slip ring arrangement can. We just don’t know what the application specific reason was that promoted this kind of solution; it certainly is not obvious from looking at the motors alone. Mr. Wooten contends that he could have designed a much better system to get the power into the rotor as well as several other major mechanical system improvements. So far no one has disputed his claim.

It is interesting to note that the Top Dead Center (TDC), the position where the electromagnets are squarely aligned with each other, takes place when the wiper is on the first small round contact in the cluster of three contacts, rather that the larger rectangular contact. Mr. Gray designated this location as 0°. It has been proposed that a certain amount of angular displacement is needed between opposing electromagnets when operating in the repulsion mode to insure that the generated forces are focused in one direction. Perhaps Mr. Gray determined that the optimum angle, for this size motor, is around 6°. The actual working angular displacement could be adjusted. Perhaps this was just a convenient reference point and had nothing to do with the function of the motor.

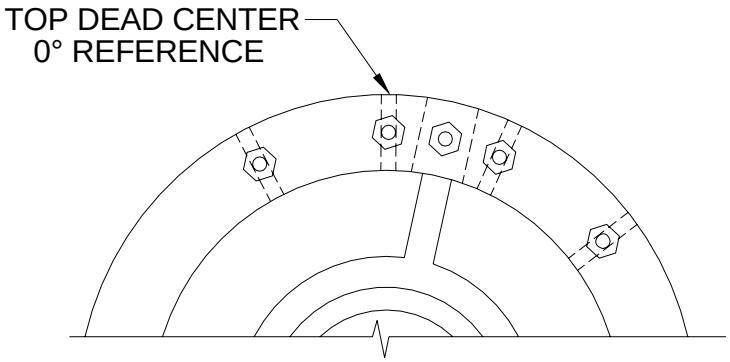

According to the jacket information the control conductors leading off from the commutators are rated at 25KV. Yet, their overall diameter is equivalent to common #14 AWG THHN household wire (.12” diameter). This is much smaller than typical electronic high voltage wire that has this kind of voltage rating. This wire was probably an expensive specialty cable in its time.

The small spacing between the wiper and the contacts in the clusters of three suggests that Mr. Gray didn’t utilize any classical control voltages that had a differential greater than 200V. If classical electron flow were involved then voltages higher than this would have caused arcing at both the leading and trailing edges of the contacts as the wiper approached and receded from them. Again arcing was not observed. Then what was the purpose of the expensive high voltage cable? One proposal is that all of the control voltages connected to the commentators were elevated to some high value and their differences was less than 200 volts. This means that the whole commutator was “floating” at some high potential above ground. The overall nylon construction of the commentator assembly suggests that it could have easily have supported this kind of high voltage operation (5KV to 20KV). The commutators on the EMA4, EMA5, and EMA6 are all mounted almost independently and external from the motor proper. This construction feature might imply a need for a high degree of isolation between the motor and the commutator. If so, then it is a distinct possibility that the commutator did operate at some high floating voltage.

The purpose of the various timing signals has been discussed within the Free Energy community but so far no general conclusions have been tendered that would explain how they affected the energy converter’s circuit operation.

It appears that the energy converter needed at least two data streams, only a portion of which was the simple positional information. The rest of these short contact closures are assumed to be signals that could prepare the energy converter for its next pulse or to, perhaps, facilitate some kind of energy recovery cycle. There are four contacts between each TDC position; therefore there are provisions for as many as four changes of state per each power pulse. Not all of them were used at the time these motors were taken out of service, but they could have been.

Mr. Wooten, in his 2001 video, claims that the commutator compartments were filled with “Luberplate”. This is the trade name for premium quality white lithium machine grease. Given that Mr. Gray didn’t seem to spare any expense in the construction of this sub assembly, then what Norm could have observed might have been a special High Voltage Teflon/Silicon insulation compound that is used in the X-Ray business. This would have help to extend the voltage differential of Mr. Gray’s control signals to maybe 500 volts or so. However smearing insulation grease (or any kind of grease) on moving electrical contacts is a risky business. This is because it is difficult to build a system that will reliably wipe all the grease off the contacts just prior to contact and still provide a consistent low resistance connection.

Both commutators were built so that the contacts are housed in a movable nylon ring. This ring was installed in a larger hollowed out cylinder that acted as a housing so that the whole collection of 15 contacts could be adjusted together in relation to the shaft position. A machine set screw allowed for a wide range of timing angle adjustments (-40° to +40°). At a setting of -16°, according to notes written on the commutator, the pulse motor would run backwards. Probably not at full torque, but this shows that these motors were reversible.

After the recovery of the EMA4 and EMA5 motors the idea that Mr. Gray’s energy converters were dirt simple has come to be questioned. The revised thought is that the Mr. Gray’s low energy technology may have been simple, but the higher power technology now appears to be more complex.

EMA4 Rear View

EMA4 Front View

Photos of EMA4 and EMA5 motors are the courtesy of Mr. Norman Wooten via KeelyNet

Note: This document is one in a series produced by Mr. McKay as part of his investigation of the work of Edwin Gray senior and he invites readers to contact him if they have any constructive comments or queries concerning the work of Mr. Gray. Mr McKay's e-mail address is mmckay@tycoint.com

E. V. Gray Historical Series

Starting with the Start Motor Mark McKay, PE

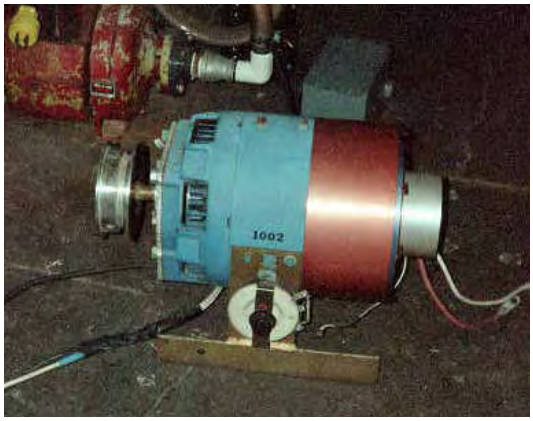

. The Start Motor as Found in 2000

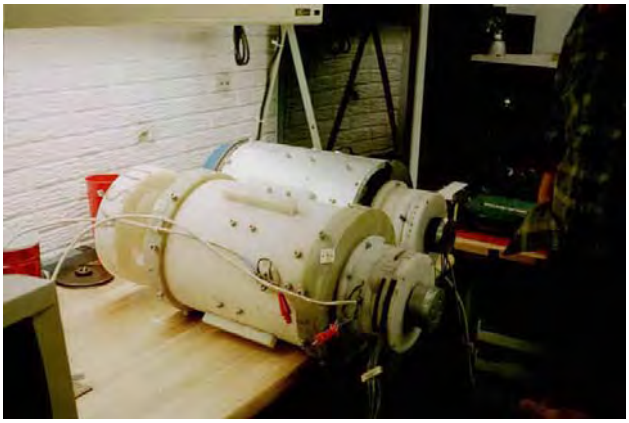

EMA4 and EMA5 Motors as Found in 2000

E. V. Gray once commented to John Bedini that his early free energy experiments were conducted with modified off the shelf industrial motors. It is assumed that when Mr. Gray's finally got adequate funding he went on to build a series of custom made motors that could take better advantage of the unique properties of his non-classical "Cold Electricity". These experimental designs were stamped with the model numbers EMA1 through EMA6. The EMA4-E2 and the EMA6 are his most well know constructions and are always associated with Mr. Gray's work. However, there were other transitional models built.

There may be one recovered example of a pre-EMA series motor that might have served as a functional test bed and very possibly an early investor demonstration model (circa 1963 to 1969).

In 2000 friends of Norm Wooten discovered two original EV Gray motors in a shop somewhere in Texas (most likely Grande Prairie, Texas where Mr. Gray had established a shop in 1986). These were the EMA4 and the EMA5 prototypes. Mr. Wooten acquired these pieces of history from the building land lord. He then took them to his shop where they were carefully disassembled. Later he produced a highly recommended video of his observations for the 2001 Keely conference in Florida. This informative tape is available from Clear-Tech at http://www.free-energy.cc/index.html in DVD and VHS formats. At the time the "Start Motor" was considered insignificant and therefore not looked at very closely.

After considerable mechanical analysis of the EMA4 and EMA5, Mr. Wooten came to the conclusion that this equipment contained no obvious free energy secrets. The vital energy converters that had powered these unique motors were not found. A few years later he decided to sell this collection.

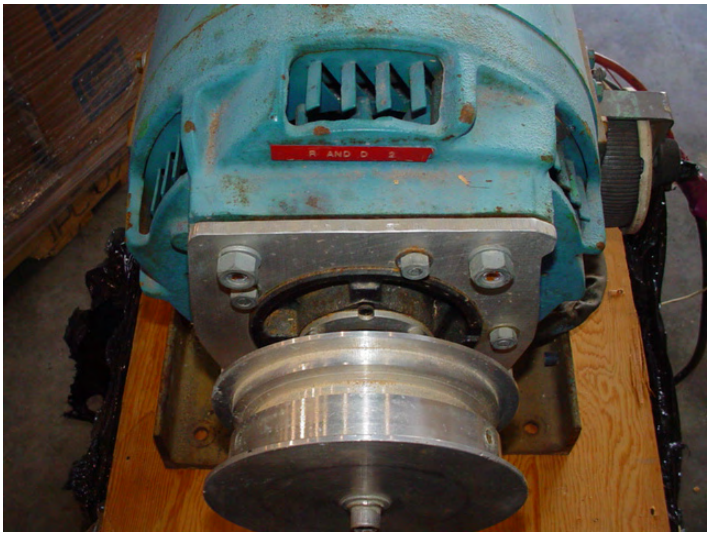

Mr. Allan Francoeur of Penticton, BC, a long time free energy researcher and inventor, bought the entire lot for $5,000 US in 2003. This package included the two prototype evaluation motors (EMA4 and EMA5), one of Mr. Gray's advanced coil popping setups (partial), and an 1940's modified non descript industrial motor. It was assumed, at the time, that this humble looking machine was a high voltage (5KV) generator used by Mr. Gray to charge up his storage capacitors for motor experiments. Later it was proposed that it was a DC motor used to start up Mr. Gray's large experimental motors, thus it finally became known as simply the "Start Motor". The Start Motor could also have been thought to be a dyno-motor. In this capacity it could have acted as a dynamic load to evaluate the performance of Mr. Gray's energy converters.

Custom Adapter Flange Added to Front of Motor

For a number of reasons this author contends that this piece of equipment was an actual working EV Gray pulse motor prior to the construction of the custom EMA models

Showmanship Tells All

Mr. Gray spent some serious money to have this simple motor dressed up way beyond any practical bench top need. If he wanted to conceal the details of its internal wiring from the occasional investor visit, then some heavy gauge sheet metal would have been a cost effective solution. Yet, this “Start Motor” was outfitted with a custom built three piece three color (Red, White, and Blue) anodized aluminum cowling set. The large red section was outfitted with a dozen small machined ventilation slots. These three pieces of non-functional eye candy probably cost him 50 times what the motor was worth, but may have been thought important enough, at the time, to help advance his early business development efforts.

As it turns out, the Start Motor is not a motor but a 5 KW DC exciter generator, circa 1940, used to provide field coil power for a larger generator (75KW to 150 KW). The 4-pole salient stator is outfitted with dual field coils that function in a compound wound configuration. It also has an independent set of slip rings that are connected to the armature coils and thus allow for external regulation. It looks odd, when compared to modern generators, because it has a commutator, like a DC motor, plus two additional slip rings like an AC motor. With the advent of solid state power rectifiers the slip rings and commutator bars in small generators have been completely eliminated, so you seldom (if ever) see this kind of construction. Externally mounted exciters have also been eliminated from the larger generator sets as well for much the same reasons. This same design was also called a “Three Wire Generator”. These were used in the 20’s to provide unbalanced three wire DC power for combination motor and lighting loads.

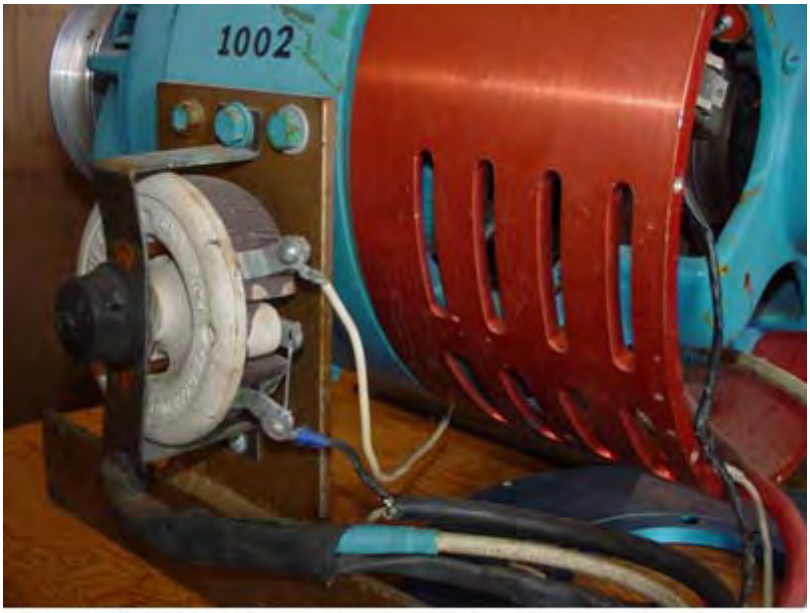

Side Mounted 200 Watt 2 Ohm Rheostat and Attached Cabling

Modification Details

Mr. Gray did a custom retro-fit to the front end of this motor. This modification was intended to be an adapter plate that would allow different flange mounted gear boxes to be attached. He also installed a simple magnetic probe in between two of the stator coils. The Start Motor was also reconfigured to receive its power through a #4 AWG cable (see the discussion about the cable used for the EMA4). There is a 2 Ohm 100 watt rheostat attached to the Start Motor’s side that has one #14 AWG cable going to one slip ring and the other going elsewhere (not connected). The return large red cable (ground?) was connected directly to the generator frame once it got inside the case. Having prime power travel through the frame of a generator or motor is defiantly not a traditional electrical practice. Except for the rewiring of the stator coils, the probe, and the cowling the rest of the motor appears to be “stock”. There were two suppressor capacitors associated with the slip rings that are similar to 50’s automotive distributor condensers. These seemed to be original equipment and had not been replaced. One of the slip ring brushes appears to have been replaced once.

Back End View of the "Start Motor"

The recovery and simple analysis of the Start Motor only reinforces what has already been suspected about Mr. Gray's technology:

1.) There is no obvious over-unity process to be found in this rotary converter. (But that doesn't mean there are none)

2.) This device was designed to have all the stator and rotor coils pulsed at once. This is an operational feature that appears common in Mr. Gray's motor systems.

3.) Applied Voltage considerations: The effective classical voltage potential of the energy that passed through this device certainly did not exceed 600 volts and most likely did not get beyond 300 volts. Had Mr. Gray exceeded these parameters, given the age of these exciter generators windings, he would have risked an insulation failure. The typical classical operation of an exciter generator like this was typically 120 VDC at 50 Amps.

Interesting Thoughts:

Why was Mr. Gray still hanging on to this early prototype demonstration motor (for some 15 years) in the first place? Technically, it would appear that it was a relic from his development past, when compared to the advanced EMA4 and EMA5 evaluation motors. He certainly paid good money to have this equipment shipped from his Van Nuys, CA shop to Texas, so it must have been of some value. The "Start Motor" weighs about 75 lbs. The best speculation to date is that Mr. Gray was probably saving his more important milestone pieces of equipment for a future exhibit in some national technical museum. If this is partially true then the importance of the "Start Motor" should not be over looked.

The schematic for the "Start Motor" below is the author's best attempt, with out disassembling the motor completely, to show the modified internal wiring.

Added Magnetic Probe Next to Stator Winding
Assumed Used for Positional Feedback

Al Francoeur has taken very good care of this earliest surviving example of Mr. Gray's technology. It has been repaired, lubricated, cleaned up and now sports a new paint job. All that is needed is a reproduction EV Gray pulse energy converter to bring the "Start Motor" back to life.

If a breakthrough is ever re-discovered that unlocks the secrets of the methods used to create "Cold Electricity" then this modified exciter motor could well end up as a featured exhibit in the Smithsonian. This could have been what Mr. Gray intended all along.

Backend of the "Start Motor"

View of Compound Stator Coil and Slip Rings

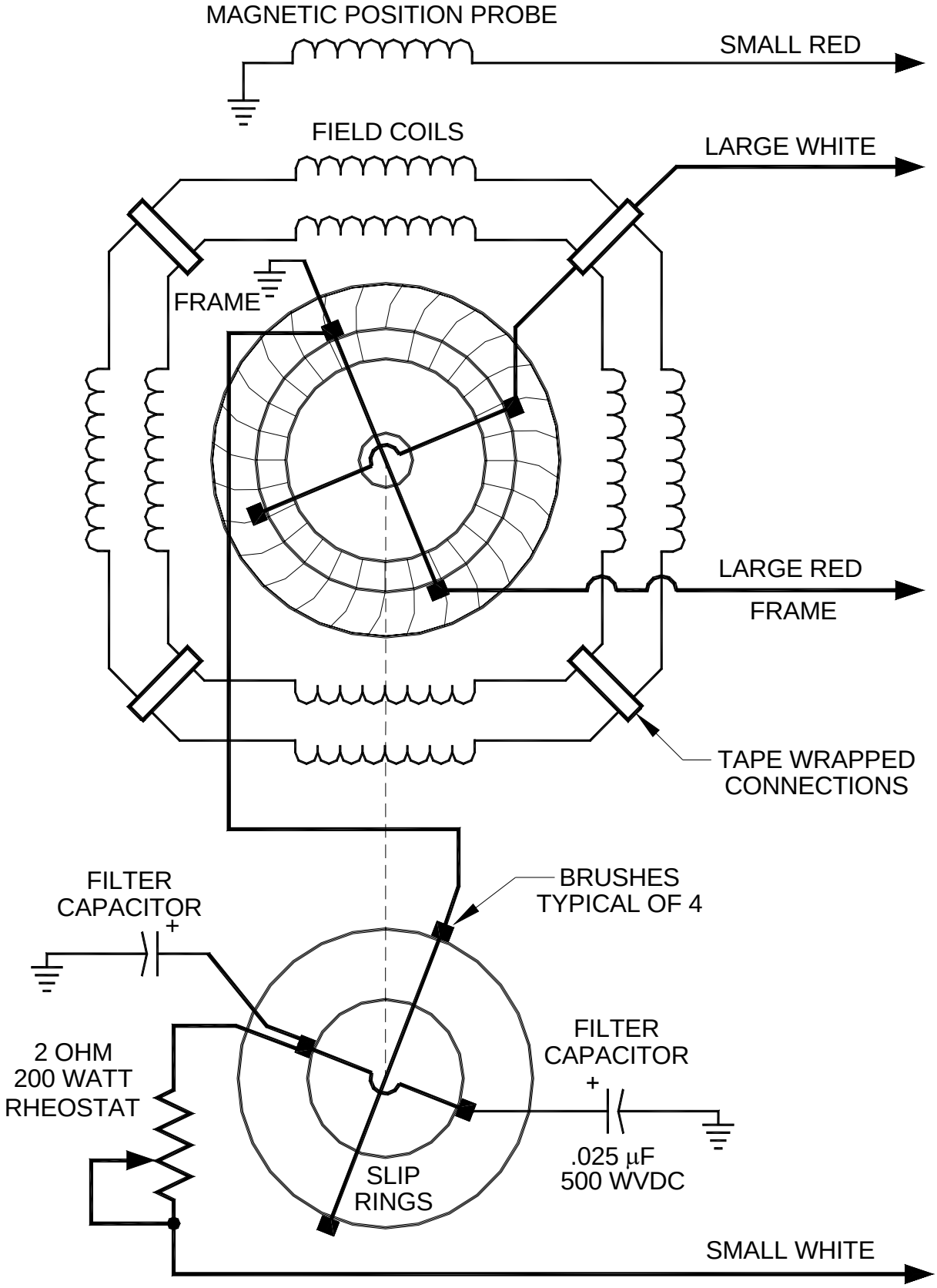

EV GRAY "START MOTOR" SCHEMATIC
(PARTIAL)

Mark McKay's investigation of Edwin Gray's Technology: Part 5

A Compilation of e-mail correspondence from Mr. Tad Johnson and other fellow researches concerning experiments with the “ED Gray” energy conversion device

From: Tad Johnson <h2opowered@c...>
Subject: ERE Produced by Accident **Date:** Thu Feb 13, 2003 2:18 pm

(Tad Johnson) Have a look at the bottom of the page explaining the "problems" Jochen has found when firing this 300KV Marx generator. Looks to be what we are after since he cannot seem to eliminate it through grounding and other means. Also look at the total conduction times (64uS) with rise and fall times substantially lower possibly in the 5-10uS range.

http://www.kronjaeger.com/hv/hv/pro/marx/index.html

“The discharge seems to induce huge voltage transients in ground and/or mains leads. This has resulted in a burnt mains switch and a destroyed ground fault interrupter. Grounding the Marx generator separately and decoupling the charging voltage ground with a resistor helps somewhat. This may turn out to be a major problem, as the Marx generator naturally produces a huge voltage step with a rise-time probably in the microsecond range, and the subsequent discharge produces a similarly steep current pulse which might be kA or more.”

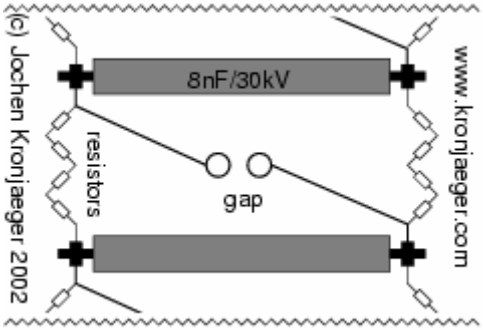

© 2000-2002 Jochen Kronjaeger
hv@Kronjaeger.com
Last modified: 2002-09-08 15:41:04

(Tim Martin) Do you have a plan to allow for easily adjusting the frequency of the impulses? I think it will be important to precisely tune the device so as to discern specific effects.

(Tad Johnson) The frequency is adjustable to a degree through adjustment of the spark gap distance and cap size. The caps I am using are 500pF so frequency should be in the KHz range depending on how much amperage the power supply is charging the stack with. Just got the HV resistors today. All I have left to do is build the CSET and figure out the charging circuit. Hydrogen or magnetically quenched gap on the output might be added later for even higher frequency and more protection against current reversals.

Subject: folder added Hi folks, **Date:** Sat Feb 15, 2003 11:52 am

(Jani V.) I thought you might like to see my version on Ed Gray’s circuit In folder "romisrom" I just created, are some pictures of it, I will add complete schematic with component data as soon as I'm able to draw it...

Tad, I hope from picture "convtube" you will find some hints for your CSET. -Jani-

Subject: CSET design **Date:** Sun Feb 16, 2003 8:28 pm

(Tad Johnson) Thanks for the info. I was going to built it similarly although I was going to use 1.250" acrylic I have already to center the copper pipe. I have some new info on my power supply I will post soon. Looks like the rise time will be ~10nS with a pulse width of 50uS and a fall time of 40uS without a tailbiter circuit or resistive load of about .1Ohm to sharpen the fall time. I may add this later. Frequency should be about 25Khz as is.

Subject: Tesla/Gray device update **Date:** Thu Feb 27, 2003 7:08 pm

(Tad Johnson) My Gray device is now operational although I have foolishly fried a couple of neon sign transformers in the process of trying to loop the collection grid energy back to the power supply without some form of isolation circuitry. It appears I am now at the point that Gary Magratten was when trying to deal with a large pulse of energy and then measure it. Current circuit parameters are:

2000VAC @ 19.2Khz @ 20mA into a 12KV/40mA/100nS full wave bridge into a 2 stage marx generator using 400pF/ 30KV ceramic "doorknob" caps into a magnetically quenched spark gap using needle points of brass into the CSET of stainless steel balls on threaded brass rods. Collection grid is 316 stainless 2" diameter tube.

Total output pulse is 54uS wide with ~10nS rise and ~42nS fall.

I am thinking of running the output energy in the secondary of a 3KV microwave transformer to power a lower voltage load although I am not sure how the transformer secondary will handle
this input, especially considering the frequency. Another option would be to increase cap size on the marx generator portion of the circuit to lower the frequency to something around 60-120Hz and then use it in a more conventional form.

Pictures and schematics to come soon. Any ideas are much appreciated.

Tad

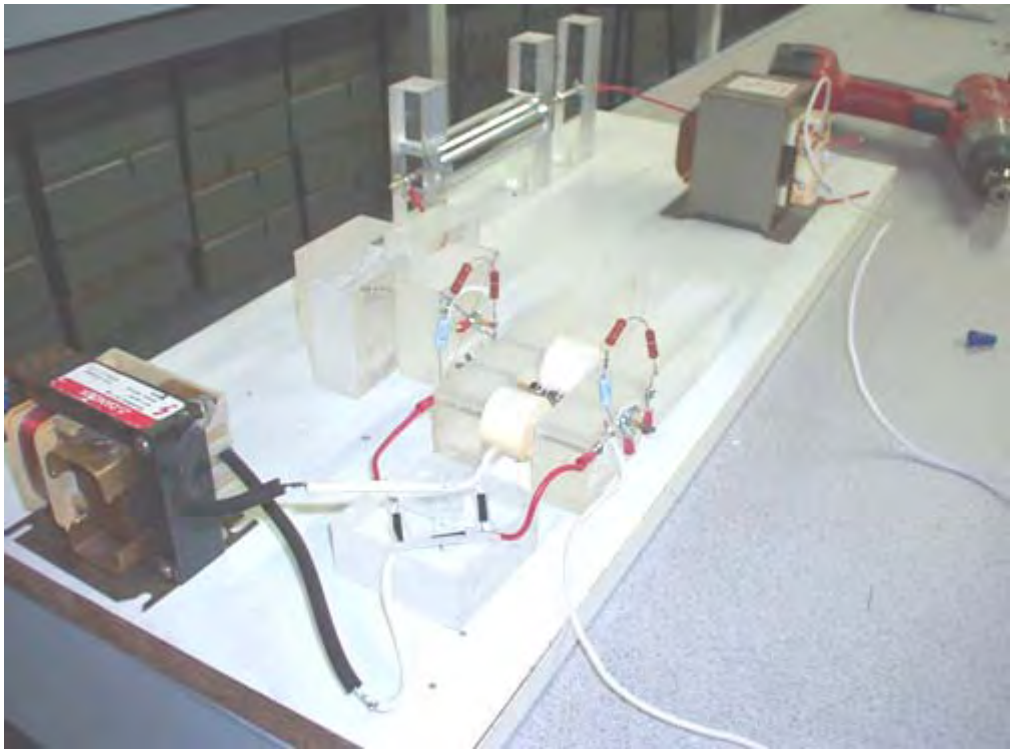

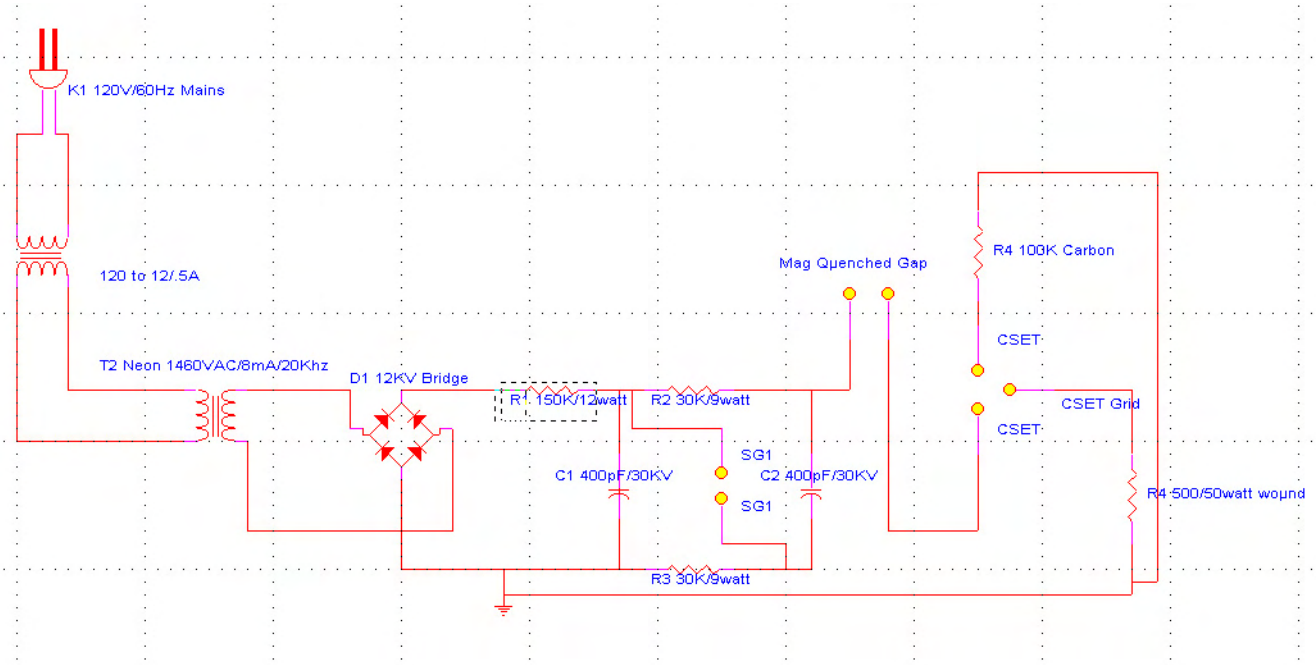
K1 120V/60Hz Mains
120 to 12/.5A
T2 Neon 1460VAC/8mA/20Khz
D1 12KV Bridge
R1 150K/12watt
R2 30K/9watt
C1 400pF/30KV
SG1
SG1
C2 400pF/30KV
R3 30K/9watt
Mag Quenched Gap
R4 100K Carbon
CSET
CSET
CSET Grid
R4 500/50watt wound

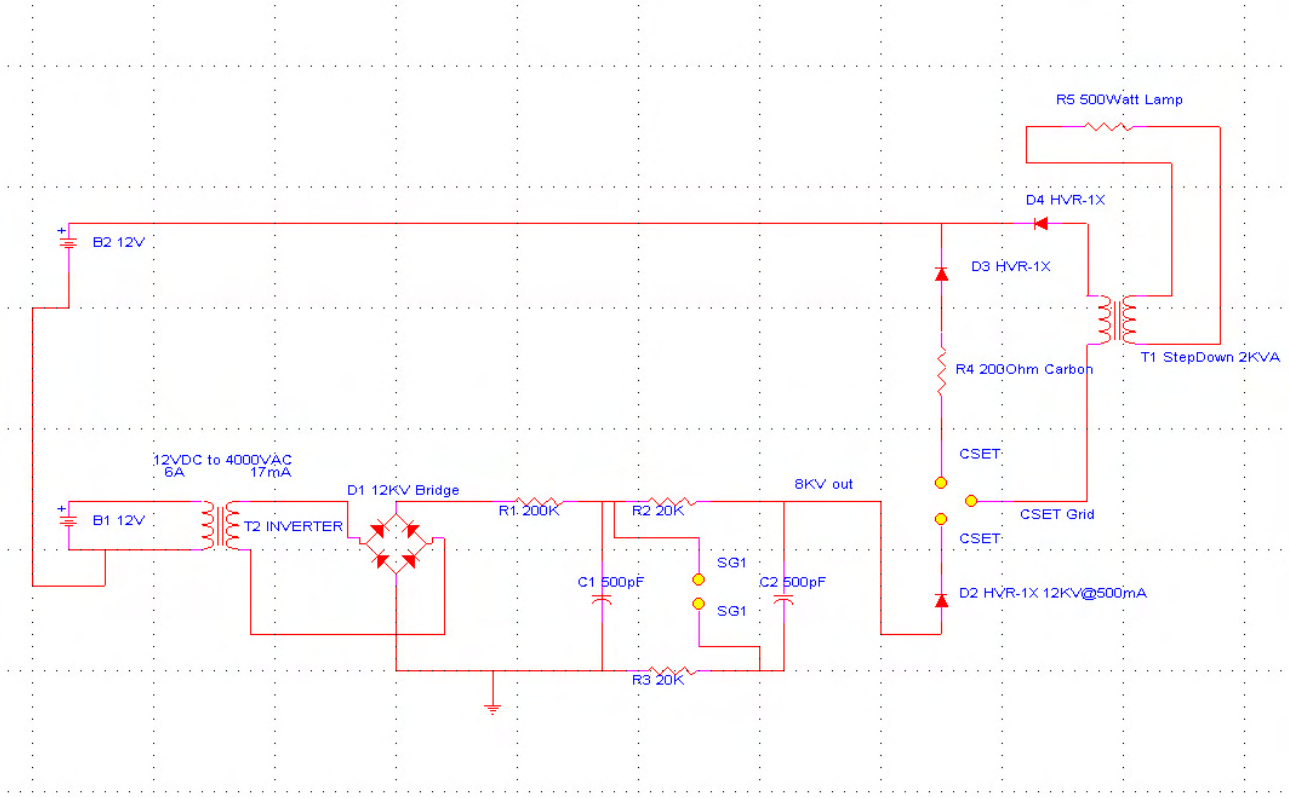

Date: Fri Feb 28, 2003 8:25 pm

(Tim Martin) I have a few questions.

Is it possible to safely measure the voltage and frequency of the CSET output?

(Tad Johnson) Yes, I got the data below by making a 50Megaohm resistor to measure it, although I am reluctant to hook up the 3500 dollar scope to it as of yet. I get more guts to do so after I check the warranty info on it. All data thus far was taken on a true RMS LCR meter.
What is the AC current draw of the neon sign transformer? (Tim Martin)

Should be 1.5 Amp per the specs. But I will check it with my true RMS power-meter(5amp max on the meter).

(Tim Martin) Would it be possible to dump the CSET output into a large lead acid storage battery?

(Tad Johnson) Yes, although I am told it will "cold boil" at that voltage. Seems to be hard on the battery but I don't have much knowledge on it. I would like to step the voltage down before connecting it to the battery to avoid premature failure.

(Tim Martin) Would the neon sign transformer work properly if connected to a small >DC/AC inverter on the 12 volt battery?

(Tad Johnson) Should.

Subject: Gray Circuit Images **Date:** Sat Mar 1, 2003 10:19 pm

(Tad Johnson) New images uploaded showing the Gray circuit running after being tuned. Having issues with long runs because the resistors are not rated for more than 10watt on the Marx generator, they start to get a bit hot. Images show a 120VAC/60HZ/1.5A neon transformer powering it since my two other 12VDC inverters were smoked due to bad judgment. No connection to the CSET grid was present during this test run since I was mostly tuning the Marx stack to the 120V neon supply. Frequency was .5-1Khz on this test.

New power supply got here today so I will try the 12VDC version charging the Marx stack at higher frequencies (20Khz).

Flash on the camera makes it hard to see arc across gaps, but it is there.

Total cost of the entire device is now about $145 American dollars.

Subject: Re: [ElectroRadiantResearch] Re: Gray Circuit Images **Date:** Sun Mar 2, 2003 4:36 pm

(Tim Martin) I noticed in your pictures that you do not have a large high voltage air core as Gray and Magratten used in their circuits. Is this un-necessary?

(Tad Johnson) I am told the air core was a step down to run 120VAC/60HZ lamps and other resistive loads since resistive loads don't care about frequency. I haven't built an air core step down yet, but I might if I can't get a motor built soon.

(Tim Martin) Also, what did you say the clear "Plexiglas" material is? Real Plexiglas(tm) in those dimensions is fairly costly.

(Tad Johnson) Acrylic. Resists about 50KV in that dimension 1-1/8" thick. Very inexpensive. 1.5'X 1.5X square is 20 dollars. I used about half of one.

Subject: Grid Energy **Date:** Sun Mar 2, 2003 11:02 pm

(Tad Johnson) Interesting findings after running the Gray circuit for a couple hours:

ERE does NOT manifest if there is no resistor on the spark gap end of the CSET. Repeat ZERO POWER if no resistor in place. The more resistance, the more the effect appears to manifest.

With 300 Ohm or more of resistance the grid starts to put off a FRIGHTENING amount of power. Enough to smoke a 50watt, 500 ohm resistor in less than 30 seconds. My input was 12 watts
total from the wall. Output from the CSET grid is UNMEASURABLE. Grounding is also becoming an issue since I cannot run the end of the CSET back to ground with a resistor in between. Also,
the energy coming off the grid appears to be harmful even with fast rise and fall times contrary to other information out there.

Anyone have any bright ideas on measuring this high amperage, high voltage energy I would be very happy. We need accurate wattage out at this point. I feel confident already with my input measurements.

Subject: Re: [ElectroRadiantResearch] Re: Grid Energy **Date:** Mon Mar 3, 2003 11:05 am

(Tim Martin) It sounds as though Lindemann was correct in saying that one of the problems Gray had was dealing with the abundance of power.

(Tad Johnson) Yes, but we will see how much power. This is what I am after. If it is possible for a small 12 watt power supply to see a gain of at least twice that, then making the circuit for the application I am interested in will be easy (small motive power, scooter, etc.).

(Tim Martin) Do you think the CSET output is behaving different than "normal" electricity? What I am curious about is your statement regarding additional resistance increasing the effect.

(Tad Johnson) It appears as though there MUST be resistance at the end of the CSET in order for the CSET grid to make power. this appears to be the "bunching up" effect Lindemann was talking about, and that Tesla had experienced. It may be that when this HV pulse hits the resistance is like it hits a brick wall and explodes outward into the grid (path of least resistance).

(Tim Martin) Also, I believe that the frequency will govern whether or not the effect is harmful. Be careful!

(Tad Johnson) I'm being as careful as I can, but I have already had one small incident.

(Tim Martin) Another thing you might try is placing a normal 100 watt incandescent bulb on the output of the CSET without closing the circuit. Single wire power transmission is a related phenomenon.

(Tad Johnson) Yes, this works with a neon bulb, I've already run neon bulbs off the grid energy. they glow beautifully to full brightness.

Subject: Fwd: Re: [alfenergy] Grid Energy **Date:** Sun Mar 2, 2003 11:35 pm

(Willard)I can suggest putting a string of light bulbs together in series as a load. 5 bulbs of 100 watts each for instance.

(Tad Johnson) I will try that although I really need to somehow get an amp meter on it
and the scope. I had to drop the voltage down from 2920 to 1460 just so I could lessen the effect enough to work with the components I am using without it destroying them. Meter overloads when trying to measure grid voltage on the doubled setting from the Marx generator.
I am using a 100Megaohm, 100watt HV probe which should be more than sufficient for these voltages. Very strange.

Subject: Re: [alfenergy] magnetic quenched gap **Date:** Tue Mar 4, 2003 11:35 am

(Peer) The magnetic quenched gap is necessary to prevent continuously arcing. Is this right?

(Tad Johnson) No, it helps quench the arc, and bring the fall times back to something more normal. The waveform as per calculations is ~10nS rise, 50uS wide, with a long fall time, this is how Marx generators work. To bring the fall time back into ~20nS range we need to clip the end of the pulse. You can do this by killing the arc prematurely or you can put a low resistance load on the output of the spark gap (tail-biter circuit), or you can do both. My goal was ~10nS rise, 20uS pulse, ~20nS fall, with a pause of 500uS between pulses.

Subject: Re: [alfenergy] for Tad **Date:** Wed Mar 5, 2003 11:44 am

(Unknown Member) I'm trying to rebuild your circuit in order to better understand the working of the CSET. The original circuit built by Gray himself had a powerful input. Heavy batteries were used to power the circuit. You only use a small current und a much higher resistor at the CSET.

(Tad Johnson) Yes, my idea is to keep the power usage as low as possible but still see
the effect. And I have truly seen it with a 9-12 watt power supply, so it IS there. I am now lighting neon bulbs from the grid energy alone, this should not be possible since it would mean an energy gain of at least 100%, or an additional 9 watts to make a total of 18watts for the entire circuit.

http://www.amazing1.com/voltage.htm

At the bottom of the page you will see the power supply I am currently using (MINIMAX2)

ATTENTION! High Voltage Experimenters
High Voltage Transformers

Low cost thumb sized modules may be battery powered and used for experimental research in: Plasma Guns, Shock Wands, Anti-Gravity, Hovercraft, Tesla Coils, Ion Guns, Force Fields, Electrical Pyrotechnics, Stun Guns, Etc..

MINIMAX5 - 7000 Volt With IOG9 Plans.....**$29.95**
MINIMAX4 - 4000 Volt With IOG9 Plans.....**$19.95**
MINIMAX3 - 3000 Volt With IOG9 Plans.....**$17.95**
MINIMAX2 - 2000 Volt With IOG9 Plans.....**$14.95**
MINIMAX1 - 1000 Volt.....**$9.95**

Bag of five 2 to 3000 volt units-some requiring minor repair, others more.
MINIBAG1 - Includes Basic Schematic.....**$19.95**

(Unknown Member) I try to copy your circuit, using a medium size 6,5kV HeNe-LASER supply.
The output (grid-power) I get, is however tiny small.

(Tad Johnson) That's fine, my supply I use now is only 1460V @ 8mA!! But this voltage is doubled in the Marx generator. The Marx generator is used instead of the large capacitor and vacuum tube switch in the Gray patents. This eliminates the need for expensive and complicated switching techniques since the Marx generator switches on in less than 50nS and off in that
same amount of time unless you are running larger capacitors. 400pF caps @ 1460V @ 8mA gives me 500HZ. But 1900pF in that same supply only gives me about 1-2HZ, but much higher amperage pulse when the gap fires. If more amperage in the power supply (like 20mA) then this rate
would obviously be much higher and much more controllable.

http://home.earthlink.net/~jimlux/hv/marx.htm [Appendix 1]

http://members.tm.net/lapointe/MarxMain.html [Appendix 2]

http://www.kronjaeger.com/hv/hv/src/marx/index.html [Appendix 3]

(Tad Johnson) The capacitors come from:

http://www.alltronics.com/capacito.htm

The 400pF 30KV ones are US $12.50 each. The 6.5KV 1500pF are 99 cents each. The cheaper ones work just as well if not better! If you really want a big power pulse buy the 14uF, 20KV, 2800 joule
cap!

CERAMIC HI-VOLTAGE TRANSMITTING CAP
400pF @ 30KV, TC N4700. Made by TDK.
20P007 $12.50

SANGAMO ENERGY DISCHARGE CAPACITOR

14 uF 20KV 2800 Joule 14" x 8" x 24" --- Mineral oil filled

20P002 $250.00

(Unknown Member) Maybe there is a secret I have not seen yet. My CSET is not a pipe, but a
round cage made by copper wire soldered together. If a measurable radiant energy is made, this one I guess should be noticed by the small CSET grid I have.

(Tad Johnson)You WILL see energy on that grid regardless of it's design. I am using a stainless tube, but any copper, aluminum or anything else should work also. Multiple layers
of different metals (copper inside, aluminum outside should increase power as well).Also, move the CSET spark gap into the tube like Skip said. I should have done this as well, but I was lazy. This should maximize the energy on the grid. Use a couple neon lamps to run off the grid. 220VAC @ 10mA is what my bulbs are, I use two in series and they light up to full brightness off the grid energy alone. One lead to grid, one to ground. They light to half brightness just touching the grid and not grounded. I am trying to figure out what I was doing when I ran the 50watt resistor across the grid output in order to get it as hot as it was getting. This circuit grid output varies greatly depending on how it is tuned so there are many things to test still.

I really want to try a flyback supply soon though.

http://www.electronicsic.com/fly.htm

(Unknown Member) Maybe my quenched spark gap is not working. How is yours built up?

(Tad Johnson) I used a block of plastic on both sides and used a Forstner bit (1/2") to core a hole in the plastic, then I used glue to glue the ceramic magnet into the hole on both pieces of plastic. Then I used a router to make a slot so I could adjust the magnet distance from the gap electrodes. The magnets TWIST the arc and cut it off early, This gives us a faster fall time.

(Unknown Member) Have you enclosed the R4 inside the CSET tube or outside? Is it a high voltage type or a normal one?

(Tad Johnson) Outside and it is a normal 10K, 3 watt resistor, made by Panasonic, ordered from Digikey. The same resistors are used in the Marx stack. I have also tried a HVR-1X, 12KV/550mA diode (THV512T is new part number). This works well also.

http://www.electronicsic.com/diode.htm

POWER DIODES (Use in MICROWAVE OVEN)

BUY **THV512T** **12KV - 550mA** **$3.20 each**

Replacement For : HVR-1X-3 12KV - 550mA
HVR-1X-4 9KV - 550mA

Other diodes I bought were VG3, VG6 and VG12 from

http://www.amazing1.com/parts.htm

VG22	22KV HV Diode For KILOVOLT MAGNIFIERS	$3.95
VG4	3KV HV Diode - Used LGU4, IOG3, etc.	$1.95

[Apparently out of Stock on the VG3, VG6, and VG12 on 5/4/03]

Subject: Gray Circuit Modifications **Date:** Wed Mar 5, 2003 11:18 pm

(Tad Johnson) I finished my circuit modifications as per suggestions. I tripled the capacitance in the Marx bank, installed the CSET gap in the center of the collection grid and added a 25nF cap on the output of the CSET grid in line with the load. The lamps glow at least as twice as bright as they did before. But what is really exciting to me was that I was going to work on the Marx gap so I went to short the cap bank. At the instant I shorted this bank of caps I felt the "wave of energy" which actually pushed my shirt in the direction of the blast.

Has anyone else seen this when discharging a cap bank and being of close proximity? Very strange anomaly. Makes me believe that Tesla must have been working with much higher voltage and much higher capacity than this circuit in order to feel this wave constantly at each gap firing. This is obviously what we are looking to reproduce.

Subject: Re: [alfenergy] Magnetic Quenched Gap **Date:** Thu Mar 6, 2003 9:16 am

(Alan Francoeur) I have tested the function of a magnetic quenched gap. I used a Marx generator to create short HV pulses. The spark gap was simple two ends of a copper wire facing each other with a distance of about 2 mm. I used a vice and put a strong Neodymium magnet at each side of the vise jaw. The gap between the two magnets was about 17 mm. (The magnets were attracting each other) the arrangement was so that you could easily remove the vice with magnets without changing the spark gap.

Without magnets an arc occurred many times after a spark and the frequency of the spark was changing all times and there was a small interval without a spark, partially. From that view I can conclude the spark gap without magnet is not so well functioning because of the lower spark frequency and the occurring arcs.

(Tad Johnson) Yes, I have found this myself as well. This is why I like the magnetic gap so much.

(Alan Francoeur) With the magnets, the spark's frequency was higher, and there was no standing arc at all. Each time an arc liked to occur the arc got blown out like a candle in the wind.

When I was connecting a small (8 Watt) neon-bulb between the vice ,which was made of steel and somehow served as grid, and ground the neon-light lit weekly and the ark frequency changed a bit also the ark noise changed! And this although there is no galvanic contact between the Marx generator and the neon-bulb.

(Tad Johnson) I don't understand why frequency changes when you connect a load to the grid, but I have seen this as well.

(Alan Francoeur) But I also measured the current flowing back to ground after the mentioned spark gap. This was done by a 50 Ohm resistor a HV-probe and an oscilloscope.

(Tad Johnson) I am making a new HV probe, 1GOhm will be the size. A bit high, but I have many problems with the 100MOhm one I now use.

(Alan Francoeur) Without magnets: the time duration of the spark could be hardly measured but seemed to be >500 ns.

With magnets: the time duration of the spark was definitely shorter and the picture on the scope was more clear. The time duration was 100 us to 200 ns.

(Tad Johnson) Great! This is what we are after.

(Alan Francoeur) In both cases, you see a positive high voltage pulse that exceeds the capacity of the screen of the scope. Then a small negative pulse, like the half of a sine wave, follows. After that there are fast oscillations. Maybe this picture does not show the true current flow, because of parasitic capacities of the used resistor.

(Tad Johnson) The ringing is what has been messing my frequency counter up I think. I might not be getting the correct frequency of pulses measured. Inductors can be used in place of the resistors to reduce loss, although the output will obviously be different and need to be rectified or sharpened up.

(Alan Francoeur) Another investigation was, that using no magnet, a multi-discharge could occur (many tiny discharges). With magnet there was always one discharge. Maybe you have the same experience.

(Tad Johnson) Yes, exactly. This is why Tesla also used these magnets around the gap. He was trying for a smaller and tighter discharge of energy.

(Alan Francoeur) Tad, have you tried to put magnets inside the gray tube? Therefore you would not need to have a separate spark gap and maybe more power inside the Gray tube.

(Tad Johnson) I have not tried this yet, but I can try it soon.

Subject: Progress **Date:** Thu Mar 13, 2003 10:42 pm

(Tad Johnson) No progress on the Gray circuit this week as I have been working on getting a lathe to make parts and do better quality work so I have not been financially able to buy the HV resistor for measurement nor the Thyratron, or spark tubes.

I pulled my Hydrogen combustion enhancement device out of the shop since fuel prices are getting ridiculous. Car already gets 33mpg, but 38-40 would be better.

I will put pictures of it when I get it running again.

I will be working on the Gray circuit again within a week or two though. Stay tuned,

Subject: Re: [ElectroRadiantResearch] Success ??? **Date:** Fri Mar 21, 2003 9:17 pm

(Jani V.) Last weekend I finally got a chance to test my Ed Gray machine and I think the Electro-Radiant-Event manifested once. When I ran the test, 40 W light bulb flashed before the whole bunch of charge, which was collected to the grids,

discharge though the safety spark gap (schematic Test1a, look my folder romisrom). I tried to duplicate the Radiant-Event but it didn't manifest again. I think the interrupter-rotating rod burned somehow because it's resistance raised near two meg-ohms!!! I also have to make the carbon resistor different because it is not very stable, resistance range between 50 - 500 ohms depending temperature. I've also added in the spark-gap a strong NIB magnet to cut arc more faster. I think this magnetically quenched spark is very important to produce ERE. Anyway, test must be done again to make sure that it was ERE that manifest neither some other discharge.....unfortunately my testing is very slow because I live in another place due to my work and my test equipment are another place. So, it may take awhile.

(Tad Johnson) Congratulations!, sounds like a successful test run. You should get constant power off the grid once the circuit is tuned and stabilized. 300 Ohms on the end of the CSET seem to be perfect in my last test run.

Keep up the good work, no matter how slow it goes, it's worth it to humanity.

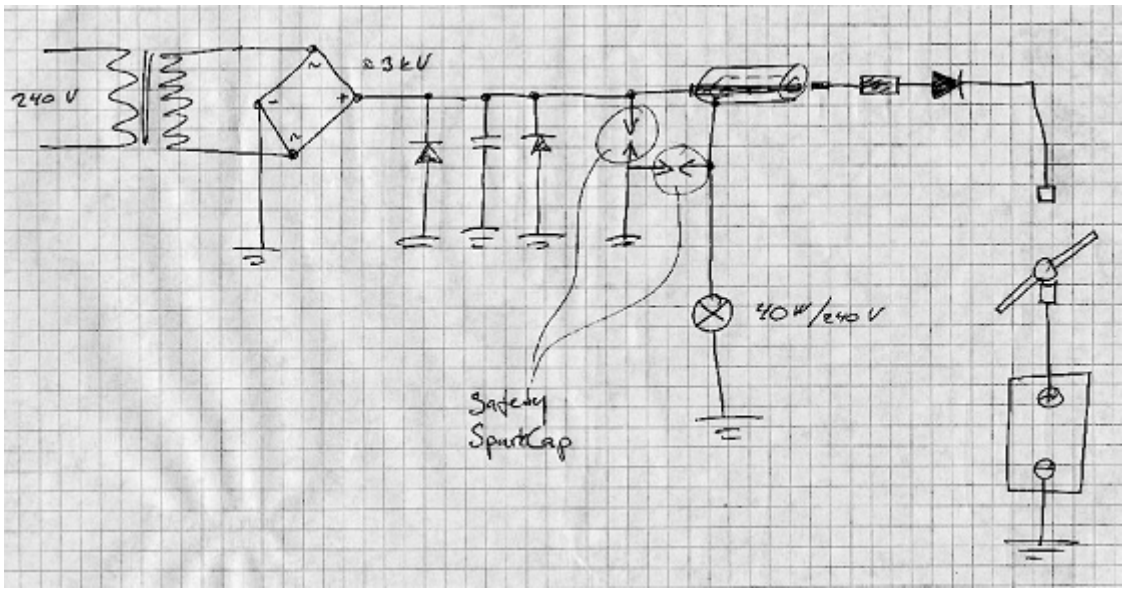

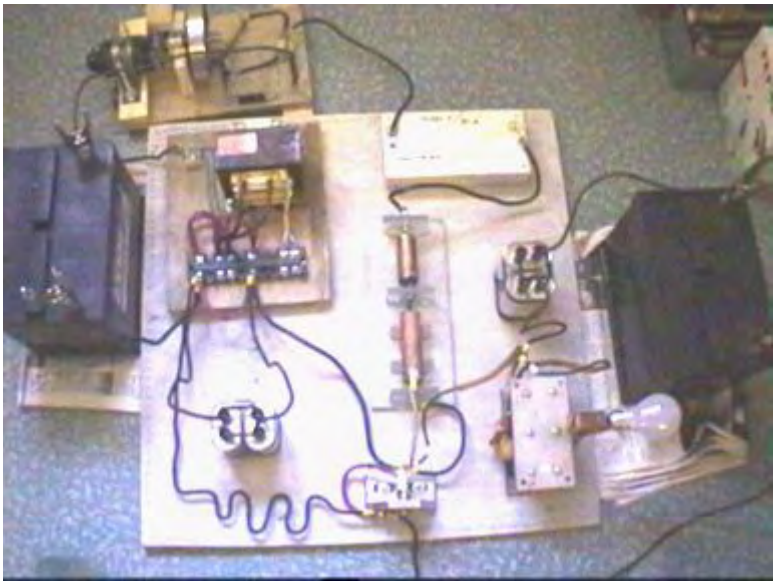

Subject: Progress **Date:** Sun Mar 30, 2003 5:21 pm

Hi folks,

I have not felt like doing much on the Gray device for a couple weeks since I have seen a relationship of mine fall apart after 8 years of being with this woman.

I am excited to see progress being made by Jani and Peer on their circuits and will hopefully find some "drive" to work on my system again soon.

Best wishes,

Tad

Note: This document is one in a series produced by Mr. McKay as part of his investigation of the work of Edwin Gray senior and he invites readers to contact him if they have any constructive comments or queries concerning the work of Mr. Gray. Mr McKay's e-mail address is mmckay@tycoint.com

Mark McKay's investigation of Edwin Gray's Technology: Part 6

Conversation between Mark Gray and Mark McKay on 5/19/07

Mark Gray is E.V. Gray's 6th child born in1958 in southern California. For the past several years he has been a parts-room manager for a school district repair shop which maintains over 200 buses. He is a single parent who currently lives with his three young adult children. (Two daughters and one son).

Mark Gray was employed by his father, E.V. Gray, for the majority of the time between 1979 and early 1988. In this time period, he served in the capacity of a general assistant. He traveled and worked at seven different locations, including a two week long trip to Israel.

Under his father's direction he assisted in the building of the majority of the "Trigger Carts" (The converter systems under the pulse motors) that are displayed in the 1896 ZTEX promotion video. He also assisted in securing parts from custom vendors, video taped the technology, assisted with various demonstrations, drove the company truck, and wrote licensing agreements. These are just a few of the multitude of tasks he did during his tenure of service.

Mark parted on good terms from his father in early 1988 when funding ran out due to differences between E.V. Gray and certain investors, over the control and future of the technology. These differences were heightened when an alleged government contact, interested in a possible R&D program on the switching/triggering aspect of the technology, came into the picture late 1987 – early 1988.

While Mark had a tremendous exposure to his father's later technology (1979-1988), his detailed understanding of the underlying functioning principles is almost gone. He did what he was told to do and was compensated appropriately for his services, but never got deeply involved with the workings of the technology. For the past twenty years Mark has been completely divorced from his father's technology and has forgotten almost everything he knew about it. He regrets not having paid more attention and not having taken a real interest in the "nuts and bolts" of the processes.

Mark was most willing to share these anecdotal technical Tid-Bits that might have a bearing on rediscovering this lost technology.

The Mark I (Converter Switching Element Tube)

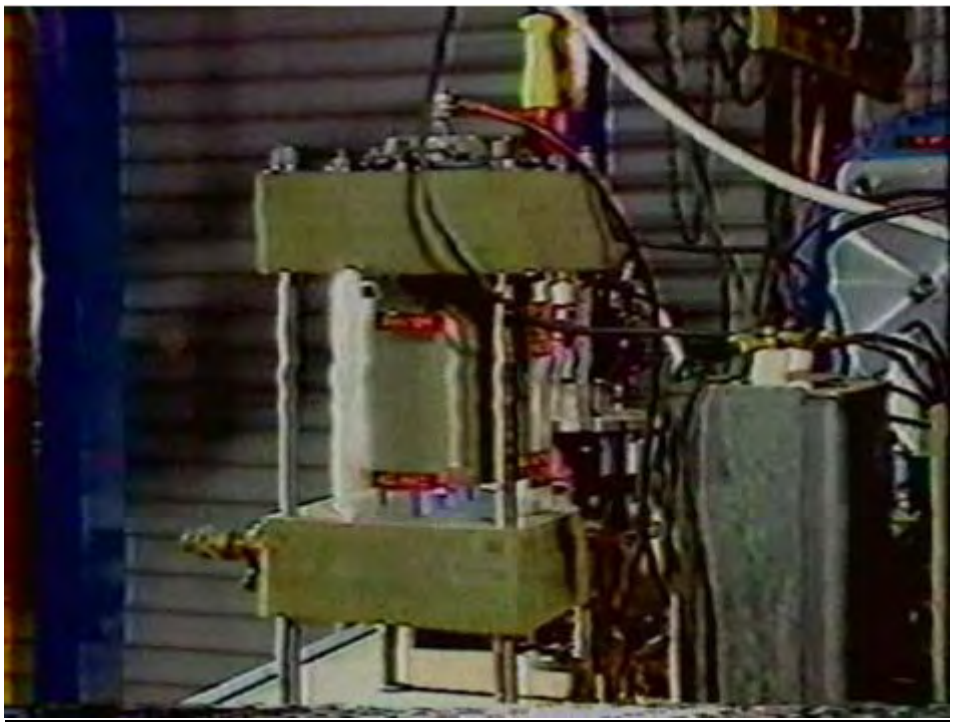

Tthe cylindrical glass enclosure is a Colman gas lantern cover

● COMMENTARY: This really limits the magnitude of the internal pressure of what ever gas may have been present. The size of the end caps could support pressures up to 6000 psi. With such a thin glass envelop anything over 3 psi would be difficult. “He didn’t want to pay the high price for a machined enclosure”

● all electrical connections were made from the top

COMMENTARY: I only see two electrical connections at the top of this device (the black center conductor and the white conductor with the large yellow single pin connector. Therefore the “Grid” is not connected to anything, unless it is connected to one of the electrodes.

● the gap was adjustable

● the internal gas was presumed to be Nitrogen from a welding supply house

COMMENTARY: Mr. E.V. Gray was very familiar with welding gasses. “He didn’t get involved with anything that exotic” (Referring to S6F)

● Purpose of the Grids: “Possibly to cover up something he didn’t want people to see?”

COMMENTARY: Like an additional series component, perhaps an HV RF coil?

● Was there an electrical connection to the “Grids”? “I don’t recall”

● “the electrodes were made of Tungsten or Titanium. Which ever material Russia is famous for.” [Titanium]

Ignitrons installed on the “Red Motor Cart”

<u>The Mark II “Silver Cylinder” (Ignitron)</u>

● This was an off the shelf commercial device that was a metal cylinder about 2” in diameter and 6” long.

● The terminal insulators were glass

● It was a two terminal device only, with wires connected to the top and the bottom.

● The round flanges were custom made end pieces to secure additional finned aluminum heat sinks that were attached around the periphery.

● The band in the center was a radiator clamp to hold it all together. Sometimes two clamps were used.

● These units did occasionally wear out or fail. New units were stocked on the shelf

● These devices contained Mercury and therefore retired units were treated with respect in storage.

● When these units arced inside you could see a blue flash through the terminal glass.

COMMENTARY: It appears these devices are Class A Ignitrons. They are the right size, right form factor and contain Mercury. However an Ignitron is a three, or more, terminal device. It operates much like a very high current thyratron. If there were no control connections for the igniter, then one use might have been a fixed-distance spark gap and just overvoltaged until it fired. One advantage of this approach would be a clean Mercury surface after each pulse. The pulse rate observed in the 1986 video is on the order of 2 Hz.

It is unclear wither these ignitrons were a replacement for the CSET or components in addition to the CSET. So far, the best explanation supports the idea that the ignitrons replaced the function of the rotating spark gaps that were in the commutator section of E.V. Gray's early motor designs. The 1986 Promotion video will show that E.V. Gray used several of these devices for his motors (up to six per cart). E.V. Gray probably developed a new system where the complexity of the old front end rotary spark gap array was no longer needed, thus greatly reducing the fabrication costs per motor.

Magnet wire for the Popping coils:

●All the wire for the construction of the projectile coils was standard copper magnet wire

●One company was contracted to machine the aluminum or plastic coils forms (Normally Nylon). Another company was hired to wind the coils. "We attempted to wind a few of our own coils. But not many"

Wire used in special places:

"That wire there was the expensive silicone filled wire that had to be used at that connection" pointing to the photo of the battery charger converter and the wires coming off the storage capacitor.

COMMENTARY: In the Cannady Interview it was noted how "Cold Electricity' would destroy the insulation on conductors. Apparently E.V. Gray did find a tentative solution to this problem by using special wire in the locations where it was required.

A Trip to the Capacitor Vendor

Mark Gray recounted an experience he had when he was instructed to return some defective capacitors to a custom supplier in Southern California.

The internal connection between the external capacitor terminal and the internal plates had opened up because the wire gauge was too small, thus causing it to fail. To explore this complaint first hand, the vendor opened up one defective unit with a can opener. Since the connection had been separated at this point there was still a substantial charge still left in the unit. There was an unexpected accidental discharged that caused a loud bang. Apparently the vendor quickly made repair modifications to all of the returned capacitors at no charge. Mark reports that the plates were gray with layers of a white material in between them. The entire unit was filled with a thick clear gel. Mark Gray claims he recalls values of 500 mF at 5 KV.

COMMENTARY: This type of construction implies a low inductance plate capacitor rather that the higher inductance rolled designs. The residual stored charge implies a low loss construction. I don't know about the dielectric, it could have been a standard poly material. Another authority claims E.V. Gray used Mica. I don't know what color mica is when installed in a large capacitor. "Cold electricity" is also known for its loud discharges.

The "Trigger Cart"

Mark Gray claims that the heart and soul of the E.V. Gray technology is the “Trigger Cart”. This is the power supply that was the source of the anomalous energy for all of the projectile demonstrations. What is interesting about this system, is that it operates from 220 V AC, counter to all of E.V. Gray’s previous motors and circuits.

COMMENTARY: Some researchers have proposed that the E.V. Gray technology required the use of wet cell lead-acid batteries for the generation of “Cold Electricity”. Apparently this is not the case with the existence of this cart. However, the overall OU qualities of this technology may be impaired with the use of utility power. But at the time, E.V. Gray was seeking military customers who could benefit from the propulsion features of this equipment.

Trigger Cart Operation: "Slowly crank up the Auto-transformer until the tubes started to fire, then watch the volt meter. When it got to 5,000 volts I would quickly turn down the Auto-transformer and fire the projectile."

COMMENTARY: In the background sound of the demonstration video we hear about 20 pops before the projectile is ready for launch. It seems E.V. Gray was discharging one capacitor into another capacitor. Once this charging operation was complete he would discharge the collected anomalous energy through his opposing coils to launch a projectile. I don't know what he used for a discharge switch.

If Mark Gray was reading an analog voltage meter then we can be pretty sure that the anomalous “Cold electricity”, when stored in a capacitor, can be observed as a positive classical voltage. This is very consistent with Tom Bearden’s description of “Negative Mass Energy” - if the two phenomena are at all related. Earlier photos show E.V. Gray using an analog Triplett 630-A multimeter to measure the voltage of “Black Boxes” that are assumed to be storage capacitors in his early “Popping Coil” demonstrations (1973).

If the Pops we hear (20 or so per launch) are from the four Ignitrons on top of the cart, then it is reasonable to assume that the source DC supply voltage was in excess of 5 KV. If the Ignitrons were connected so that they would self-trigger by connecting the igniter to the anode, then there would be a sudden break-over pulse every time the voltage difference between the anode and cathode reached about 1500 V DC. This would imply that the source supply voltage was at least no lower than 8 KV.

Since there was a concerted effort to turn down the auto-transformer after reaching 5 KV, I would guess that E.V. Gray was charging his custom capacitors right to their design limits.

Auxiliary Capacitors:

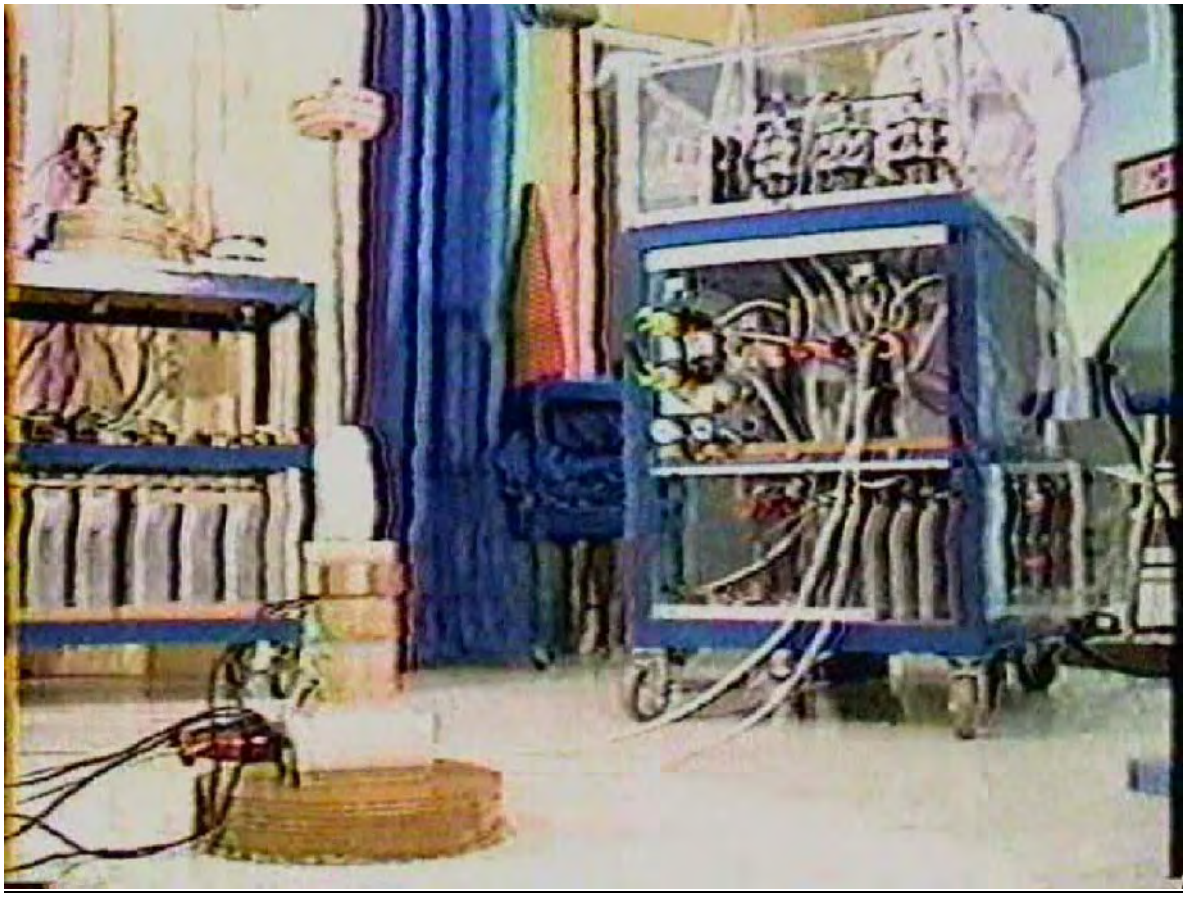

COMMENTARY: In this photo, note the “Projectile Cart” on the left. Six different types of projectile are launched from this demonstration platform. The bottom of this cart contains a pretty substantial capacitor bank array. You can see only 70% of the cart. This would imply that there are about 9 large capacitors in the first rank. If two rows are employed, then a total of 18 capacitors are needed. I suppose this sort of stored energy was needed to support the “Hover” demonstrations or the large 71 lb launch.

Mark Gray claims that this cart was in E.V. Gray’s possession at the time of his death. He plans to enquire among family members as to where this piece of equipment went.

COMMENTARY: It is my contention that if this cart was saved from the one way trip to the surplus re-seller, then who ever got it couldn’t make it operational. According to Mark Gray, his father spent his last days disassembling this equipment. This system would be high on the list of things to do first.

“Split the Positive?”

When asked if his father ever told him about the fundamental energy conversion process Mark Gray recalled one experience where his father told him “The energy starts from the positive terminal [of the storage capacitor/dipole] then part of it goes back to the supply battery and part of it goes to the load

COMMENTARY: This type of topology is shown in patent 4,595,975, but the actual technical meaning is anybody’s guess.

The “Wireless Projectile”

Mark Gray claims that some potential investors would ask “What good is this system if you have to have wires connected to projectile? That is not going to work”. So he developed this demonstration apparatus to show that the projectiles really didn’t need wires. Actually, they are needed for only a short distance, beyond which the magnitude of the repulsive forces drops off quickly. The above setup provided a sliding contact that is in the little black & white tower on the left of the larger black cylinder. This arrangement allows for about 6-8” of travel before electrical contact is broken. By that time, the travelling mass has received most of the shock impulse it is going to get. The black repulsing coils are composed of copper magnet wire that is about 2” deep. The outside is covered with black vinyl electricians tape. Mark also said that it was hard to reconnect the sliding contact because of rotation after a shot. Apparently it took a broom stick and a ladder to rest the demo.

COMMENTARY: The measurable voltage of the energy that propelled the small black cylinder on top with the (white plastic saucer on the bottom) was said to be 5KV. Now look at the length of the arc trail [about 12”] of the little contact tower (at the left) after lift-off. Consider what kind of voltage was being generated at this point.

<u>The State of the Storage Batteries prior to a test or demonstration for a Motor Cart</u>

“When a motor cart was prepared for a test (or demonstration) both sets of batteries were fully charged”

COMMENTARY: So much for the idea of having to start with a dead battery. This theory comes from the idea that the lead-sulfite was the medium that might have converted a pulse of classical electricity into “Cold Electricity”

<u>Another Cold Electricity Demo using the “Start Motor”</u>

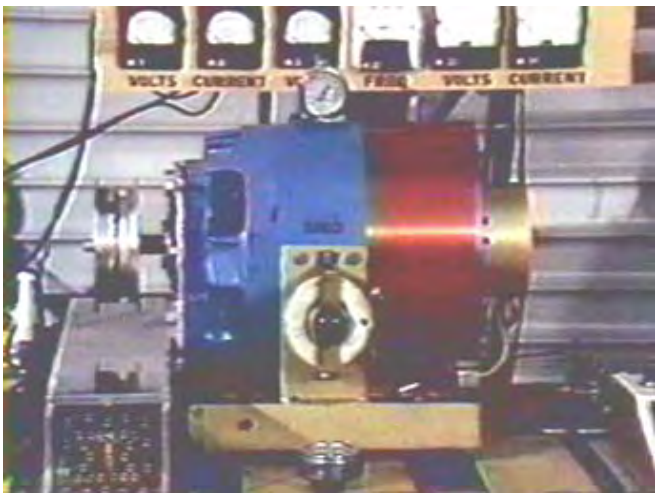

The white round dial instrument sitting on top of the “Start Motor” on the Multi-demonstration Cart is a thermometer. The other round dial instrument lying down on the table just below the round rheostat is a mechanical RPM indicator. [Biddle Meter]

The Importance of the Spark Gap

E.V. Gray told Mark Gary that the spark gap was very important.

COMMENTARY: A lot of other researchers think so too.

The Purple Motor

A Family Group Photo

Motor Names:

While the older E.V. Gray motors were numbered, the newer versions in the 80's were named according to a color. There was the Red Motor, The Blue Motor, The Purple Motor, The White Motor and the Black Motor. Each one was intended to demonstrate some particular aspect of this technology or head off any common questions that had continually arisen over the years.

Stump the Expert Time:

Once, a professional researcher, from MIT, was allowed to examine the equipment while development was taking place in Canyon Country, CA, (Possibly for some investor review). He had flight arrangements to leave the following Monday and had the whole weekend plus a day for his investigation. Apparently there were no restrictions placed on what he could look at. This man was alleged to be one of the co-inventers who developed the first anti-shark repellants. He examined and observed for at least one whole day and then made a comment to the effect, "If I can't figure this out, then all of my academic training is worthless". He worked all through the weekend and left the following Monday with no tentative classical explanation.

COMMENTARY: It would sure be nice to see if this individual would grant a phone interview. I'm sure he didn't talk a whole lot about his experience when he returned to Boston. I wonder if he would now?

Other Questions Asked through e-mail:

To your knowledge did your father (or his assistants) own or use any of these common electronics shop instruments?

Oscilloscope
Radio Frequency (RF) Generator

General Signal Generator
Pulse Generator
Transistor Tester
Q-Meter
Grid Dip Meter
Frequency Meter
Digital counter
Capacitor Tester
Battery Tester
Spectrum Analyzer
DC Power Supply

Of course any information about a general description, perhaps a Make and Model number (ha,ha), and an idea as to what the instrument was used for. When it was used and by whom.

Response 1) There were some meters involved, but I do not remember what meters might have been used or for they would have been used for.

2) The "kernel" of the technology appears to reside on the circuit trigger boards and the specific wiring to the off board components. From the photos we know that large power transistors were used. It is pretty obvious that other board components were used as well.

Do you happen to know what kinds of major components were on these boards? *We can assume that there were a number of supporting resistors and small capacitors*

Silicon controlled Rectifier (SCR)
Control Relays
Large Power Resistors
Transformers
Inductors or Chokes
Radio Frequency Coils
Vacuum Tubes
Diodes
Rectifiers
Power MOSFETS
Varisters
Potentiometers - Variable Resistors
Others
Model number of Power Transistors?

Of course a general description, approximate count, and any idea as to their function would be helpful.

Response 2) The most knowledgeable on the circuit boards may be Nelson 'Rocky' Shlaff (or Schlaff) from the Los Angeles area. I do remember that the circuit boards were developed in Canyon Country and for awhile the services of an electronics consultant was acquired to help development some of this circuitry. I do not remember the name of the consultant.

3) We know that you did a majority of the work on this equipment.

Was there any specific part of these "Carts" that your father reserved for himself to work on exclusively?

Response 3) Actually, my father did not protect any specific area of any of the technology that I can remember. Many people had cast their eyes on and all over the technology that was built. Nelson Schlaff and myself did most the assembly of the technology. There were others from time to time that were involved with the technology built.

4) Concerning the "Trigger Cart". You said that during its operation you would charge a certain capacitor to 5,000 volts before launching a projectile. You also said the voltage input was 220V AC.
Here are some general questions about the over all construction of the cart.

What Size Breaker was needed to power the "Trigger Cart" 30 Amp, 40 Amp, 50 Amp, higher?

Was a transformer use to raise the voltage from 220V AC to a higher voltage?

If 5,000 volts was the final measurable output voltage, then was there a higher voltage used somewhere else in the circuit that you know of?

Were Inductors or "Chokes" included on this Cart?

Did you ever have to make repairs on the "Trigger Cart", if so what was replaced and how often?

There are 4 "Ignitrons" on the Trigger Cart. Were all of these used at all times, or did different demonstrations use a different number of these devices?

Response 4) The only thing I remember about the voltage was charging the capacitors to 5,000v ?? for a one-time discharge (propulsion of a magnet), however, the hovering of magnets was achieved by a constant firing of the tubes.

5) Concerning the origins and nature of the transistor circuit boards used for the "converters".

Were these circuits made in house or contracted out? Did you make them? Did the design change over the years? If these boards failed who repaired them? Were replacements kept on hand?

Response 5) I do not recall much, if any was needed, maintenance on the circuit boards, nor do I recall having any made up as spares. I believe that all R & D and constructions of the technology happened in-house.

Mark McKay's investigation of Edwin Gray's Technology: Part 7

Edwin Vincent Gray (1925-1989)

Edwin Gray was born in Washington, DC in 1925. He was one of 14 children. At age eleven, he became interested in the emerging field of electronics, when he watched some of the first demonstrations of primitive radar being tested across the Potomac River. He left home at 15 and joined the Army, but was quickly discharged for being under age. At 18 he joined the Navy and served three years of combat duty in the Pacific. He narrowly escaped death when a bomb exploded on his ship's deck during an attack. He received an honorable medical discharge after spending some time in a navel hospital with head injuries.

After World War 2, he married his first wife, Geraldine, and started a family in Maryland. He worked as an auto-body and fender repair man. In 1956 he moved his family to Venice, California. A few months later he moved to Santa Monica where he began his first business named "Broadway Collision". A couple of years later, he opened a second shop in West Los Angeles. Both locations failed early in 1960 due to an economic downturn. He relocated to Prescott Arizona, and then to Littleton, Colorado in 1961. From 1962 until 1964, he worked in Las Vegas, Nevada, always in the auto-body repair business.

By 1965, Gray relocated to southern California again, and established a partnership with George Watson. Watson was a master car painter with an established clientele of Hollywood celebrities. A new location was established in Van Nuys, California on Calvert Street called "The Body Shop". It was a one-stop, high-end custom auto-body & painting shop. This business prospered well for the next three years until a conflict of romantic interests ended his first marriage (with seven children) in early 1968. A divorce followed in 1969.

(In 1971, Gray married Renate Lenz, the daughter of Fritz Lenz. They had three children. This relationship lasted 7 years. Gray married three more times after that.)

Towards the end of 1969, Gray terminated his auto-body business, never to practice it again. He sold 2/3^{rds} of the Van Nuys building to his nephew and re-outfitted the remaining portion to build and promote his next business enterprise. Somehow, Ed Gray had made a sudden and dramatic shift from the auto-body business to an independent inventor with an extraordinary technology, with hardly any previous background in electronics.

Members of his family are still baffled by the quick transition. Some say their father was occasionally struck with flashes of profound inspiration. Other researchers say that Gray must have been working secretly on the motors for years, but family members dispute this. Gray himself told one of his partners that he received this information from a Russian immigrant named Dr. Popov, who had gotten it from Nikola Tesla. But again, family members claim no knowledge of these supposed events. While there are similarities between Gray's technology from 1970 and Tesla's "Method of Conversion" technology from 1893, there is no known lineage to trace the connection between these two processes. No one ever saw Gray studying the work of Tesla, or running any preliminary experiments. No one who is still alive, who was associated with these events, knows where the technology came from or how it developed.

In 1971, Gray formed a limited partnership named EVGRAY Enterprises, Ltd. By 1972, Gray had gathered enough investment and development expertise to build a 10 HP prototype motor. This unit was submitted to Crosby Research Laboratories for evaluation at Cal-Tech. Crosby Research Institute was owned by Bing Crosby and run by his brother, Larry Crosby. This motor demonstrated an output of 10 HP (7460 watts of mechanical energy) for the extremely low electrical input of 26.8 watts. This is an apparent energy gain of 278 times the input! This left the Cal-Tech scientists very uncomfortable. The report states the motor operated at "over 99% efficiency", but the rest of the data is a little confusing.

On the strength of this report, Bing Crosby came on board as a major investor. So did 'Boot' Mallory, of the Mallory Electric Company, who made the high voltage ignition coils used in Gray's circuits. By early 1973, EVGRAY Enterprises, Inc. had completed a 100 HP prototype motor called the EMA4-E2. Fifteen private investors were now involved. Ed Gray also received a "Certificate of Merit" from Ronald Reagan, then Governor of California, during this period.

By the summer of 1973, Gray was doing demonstrations of his technology and receiving some very positive press. Later that year, Gray teamed up with automobile designer Paul M. Lewis, to build the first fuel-less, electric car in America. But trouble was brewing when a disgruntled ex-employee made a series of unfounded complaints to the local authorities.

On July 22, 1974, the Los Angeles District Attorney's Office raided the office and shop of EVGRAY Enterprises, and confiscated all of their business records and working prototypes. For 8 months, the DA tried to get Gray's

stockholders to file charges against him, but none would. Since he only had 15 investors, many of the SEC regulations did not apply. By March 1976, Gray pleaded guilty to two minor SEC violations, was fined, and the case closed. After this investigation ended, the DA's office never returned any of his working prototypes.

In spite of these troubles, a number of good things were happening. His first U.S. Patent, on the motor design, issued in June of 1975, and by February 1976, Gray was nominated for "Inventor of the Year" by the Los Angeles Patent Attorney's Association, for "discovering and proving a new form of electric power". Despite this support, Gray kept a much lower profile after this time.

But there were also other set-backs. Paul Lewis pulled out of his deal with Gray in 1975 when Gray couldn't deliver a production motor for Lewis's Fascination car. Gray made a last ditch effort to secure the needed capital to get his motor into production by calling a press conference in 1976 and demonstrating his nearly complete, second generation 100 HP motor, the EMA-6. Unfortunately, this event didn't secure any additional funds for the company. Shortly thereafter, Bing Crosby died in 1977, followed by 'Boot' Mallory in 1978. This left Gray without his two strongest supporters.

In 1979 Gray reorganized himself into ZETEX, Inc. and EVGRAY Enterprises, Inc. ceased to exist. In the process of this corporate restructuring, all of his earlier stockholders lost all of their money. Gray then moved his development operations to Kalona, Iowa where new investors were supporting his research. This working relationship also failed when these new partners attempted a hostile take over. In a sudden midnight flight, in the middle of winter, Gray loaded up the technology with all his belongings and headed to San Diego, CA where stayed for 18 months.

In 1982, he relocated his operations to Canyon Country, California where he hired three assistants to help build several large demonstration carts. After a year of work, Gray got suspicious of the loyalty of his employees. He abruptly fired all of them when they reported for work one morning. He then moved to a second location in Canyon Country and continued with the construction until early 1984. Later that year, he moved his operation back to Las Vegas where he stayed till the spring of 1985. In the summer of that year, he moved to the almost abandoned town of Council, ID (population of 816), where his oldest son 'Eddie' had settled down.

In Council, Gray finished up the construction of five different motor prototypes and several other kinds of demonstration equipment. He then began to produce promotional videos and invited local TV stations to report on his work. Gray then sought out the services of a Wild Cat oil exploration lawyer and found Mr. Joe Gordon of Texas doing work in Montana. The two men formed a partnership under Mr. Gordon's established business Western States Oil. They also established a branch holding company in the Cayman Islands from which to sell stock in the new venture. Gray decided to move again, this time to Grand Prairie, Texas to improve his exposure to international investors.

On the strength of his videos alone, the Cayman Island operation was selling stock and raising capital quickly. Interested investors from Israel convinced Gray to spend two weeks in the Holy Land where a series of emotional group negotiations took place. An agreement was never reached. They conceded that the technology held a lot of promise, but it was not mature enough to be immediately employed on the battlefield. In addition Gray insisted on maintaining a controlling interest in what ever deal was cut. For whatever reasons, Gray came back with a much different attitude.

Meanwhile the agents who had been selling his stock in the Cayman Islands decided to give themselves large commissions, plus whatever other funds they had control of, and quickly move to Israel themselves. Apparently, they had also oversold the original stock issue by about three times.

Feeling swindled himself, Gray made a final, desperate attempt to get proper recognition for his achievements. He actually wrote letters to every member of Congress, Senators and Representatives, as well as to the President, Vice President, and every member of the Cabinet, offering the US Government his technology for Reagan's "Star Wars" program. Remarkably, in response to this letter writing campaign, Gray did not receive a single reply or even an acknowledgment!

In 1987, a person named Reznor Orr presented himself, claiming to be a "Government Contact". Mr. Orr first made straightforward offers to buy all of Gray's technology outright for a modest price. These initial proposals did not meet with Gray's approval, and he turned them all down. At about this time, Gray's income stream from the Cayman Islands stopped. Mr. Orr's next offers were much less friendly, and mixed with certain veiled threats. When Mr. Orr left town, "to let Mr. Gray think about it", Gray realized he had a serious problem. Out of money and under threat, he quickly held a massive liquidation sale, including personal belongings and family furniture he had had for years. Only the equipment and materials he could stuff into his Ford F-700 box van were spared. Gray drove to Portland, Oregon and hid out for six months.

Some time during 1987 - 1988, Gray became ill with a serious case of pneumonia and was hospitalized. He had been a heavy smoker all his life. He never fully recovered from this illness and required Oxygen from this point on. His reduced lung capacity made it much more difficult to continue his work.

From Portland he moved to Sparks, Nevada. Gray rented a combination living quarters and shop space in a light industrial area. He unloaded his truck and began to disassemble all of his demonstration carts. He was living with Dorothy McKellips at the time who claims that Gray still did experiments during the day but in the evening all the components were once again taken apart and mixed with other parts. Early, one morning in April of 1989, about 2:00 am, somebody suddenly started banging hard on one of the shop windows. Gray, in his compromised health condition, got out his gun and went down stairs to frighten off the intruder with a warning shot. The gun failed to fire. A few minutes later, Dorothy found Ed on the floor. It is presumed that the resulting stress caused Gray to suffer a fatal heart attack, although the exact cause of death was never determined. He was 64. The identity of the late night visitor is not known.

Gray's oldest son "Eddie" flew to Sparks, Nevada to identify his father's body. Later, he spent several months attempting to help a Kansas group recover the technology. But, Dorothy would not release any of Gray's equipment until she had received a large payment for herself. The Kansas group then got a court order to take possession of the technology. But the document was poorly worded and did not define exactly what "technology" really meant. The order did state that they had rights to all of the motors. Dorothy caught this fact and gave them just the bare motors, keeping all the power converters and other things in her possession. Dorothy then decided to have the last laugh before this looming legal battle could escalate much further. She had all the remaining equipment, videos, parts, drawings, and laboratory notes hauled away and dumped in the local land fill. Apparently none of the remaining systems that the Kansas group had on hand were complete enough to reconstruct. Meanwhile, the remaining millions of dollars of investor capital in the Cayman Islands bank account were tainted by the fraud of the over-sale of the stock. Ultimately, these funds were either confiscated by the local government in fines or simply swallowed by the bank, since no one could withdraw the funds without being arrested.

[This account of the life and times of Edwin V. Gray was compiled by Mark McKay, of Spokane, Washington, after numerous interviews with a number of Ed Gray's surviving children. This account is an attempt to piece together the most accurate retelling of Ed Gray's story ever made available to the public. Many of the details in this account are in direct contradiction of earlier accounts as reported in the newspaper clippings from the 1970's. These earlier accounts should now be considered to be in error.]

Mark McKay's investigation of Edwin Gray's Technology: Part 8

Evaluating Common FE Coupled Inductor Systems in Terms of Delay Line Parameters

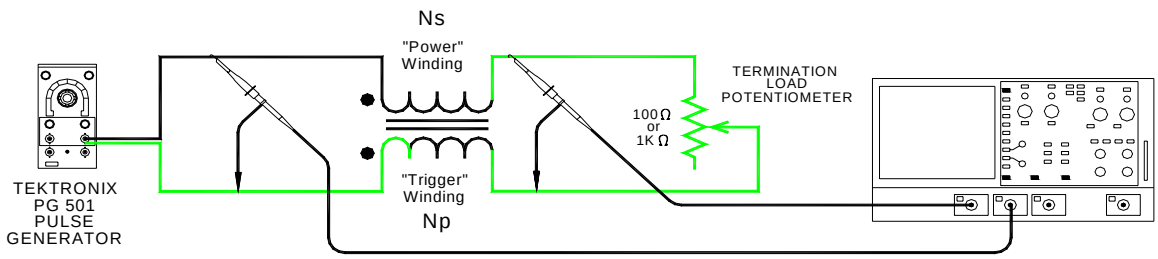

DETERMINING DELAY TIME T_d & CHARACTERISTIC IMPEDANCE Z_o

Coupled Inductors are a central component in a number of established Free Energy technologies. They have been used by Robert Prentice, Marvin Cole (E.V. Gray), Eric Dollard, John Bedini, Stan Meyer, and possibly Lester Hendershot. This is in addition to the vast array of coupled inductors that Dr. Tesla employed in his decades of research. Generally, modern independent researchers approach these devices from the standpoint of classical transformer theory and tend to view their operation in this way. I propose that, in many cases, these devices were intended to be used as Transmission Lines or Delay lines to take advantage of the unique features available with this topology. This is especially important when the characteristics of a high energy sparks are being engineered to achieve fast rise and fall times (<10 nS).

Volumes of detailed technical books are devoted to this complex subject. Specific applications are numerous because so many power and information signals are carried by transmission lines of one sort or another. However, in the realm of Free Energy the function of a Delay line appears to be relatively straight forward. Its common purpose is to act as a special kind of DC charged capacitor that will quickly deliver a fixed amount of disruptive energy to a spark gap. In applications that don't involve a spark, like the John Bedini motor, it is used (among other purposes) for sharp transition pulse formation using the same principles of operation.

There are two measurable parameters of a Delay line which are the foundation of most engineering analysis that will involve these devices.

1) The effective voltage time delay from one end to the other, abbreviated as T_d measured in seconds

2) The characteristic impedance Z_o measured in Ohms

Both of these values can be easily measured with standard electronics equipment. This paper will utilize a LeCroy 9361 dual channel 300 MHz Oscilloscope with two standard 10:1 10 Meg probes and a Tektronix PG 501 pulse generator. A Fluke 87 VOM will be used to determine the resistance of potentiometer settings.

A good place to start this subject is to observe how a commercial Delay line functions. In this example an old 465 Tektronix oscilloscope twin-lead vertical input Delay line is evaluated. To best see its operation, the PG 501 was set to the narrowest pulse it could produce (25 nS) and applied directly to the Delay line input. A 100 Ohm potentiometer was set to 50 Ohms and connected to the Delay line output. The second oscilloscope probe was connected in shunt with the termination potentiometer.

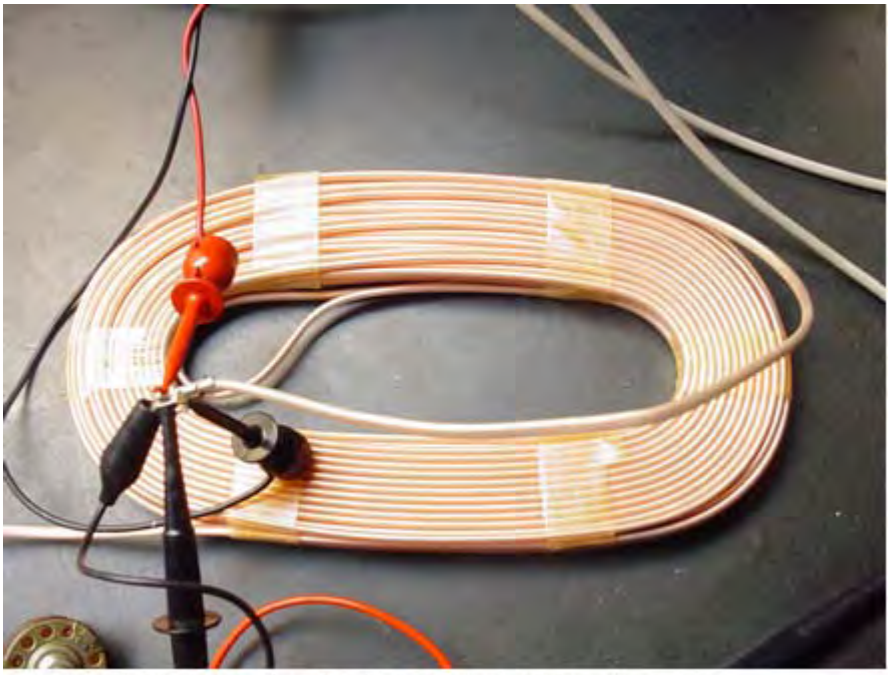

Vertical Delay line for Tektronix 465 Oscilloscope

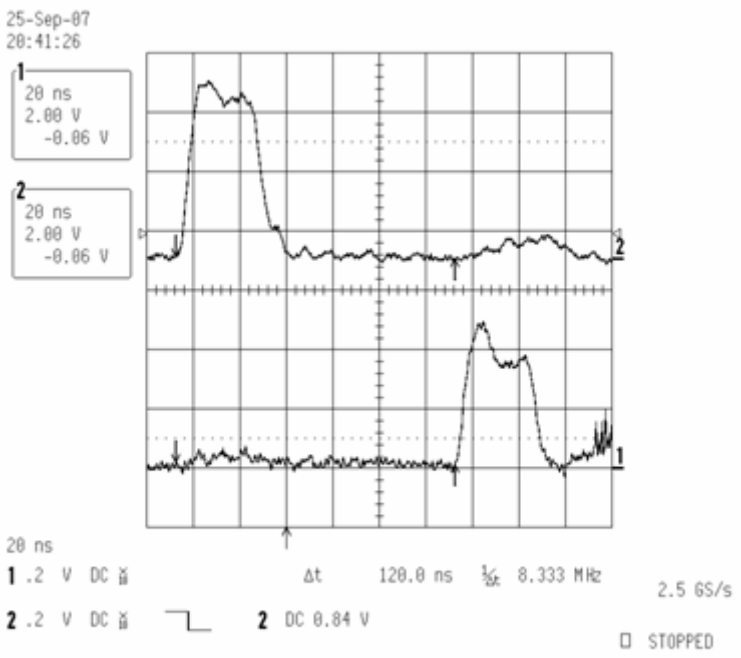

Resulting Trace using Two Probes

The two-channel trace from the oscilloscope (above) clearly shows the input pulse (Upper trace on Channel 2) and the output pulse (Lower trace Channel 1) delayed by 120 nS. While this straightforward approach will easily determine the delay time in a very low loss instrument Delay line, establishing delay times in homemade coupled inductors requires a different approach. If this present method were applied to most real-world coupled inductors, the output pulse will become so attenuated that it will be barely visible. The degradation of the input pulse increases as the coil under test becomes larger.

As it turns out, the energy in a 25 nS pulse is just too feeble to be observed in any homemade coupled inductor. This is because the parasitic capacitance filters out all of the high frequency components. Short pulses are just swallowed up in the unavoidable losses inherent in hand-wound inductors. However, another simple method, using the same equipment, can be employed to overcome these limitations. If the test input pulse is widened to some convenient length (to increase the applied energy) then the reflected pulse wave forms can be viewed. The actual delay time will be ½ of the observed time between the leading edge of the applied pulse and the change in response that is caused by the termination resistance.

A good example would be to make measurements on a typical Bedini SG motor coil. The coil being measured is a bifilar design using #19 AWG magnet wire for the “Power Winding” and #24 AWG magnet wire for the “Trigger Winding” with 420 turns wound on a Radio Shack wire spool. The soft iron welding rods used for the core were removed.

Typical John Bedini SG Bifilar Motor Coil

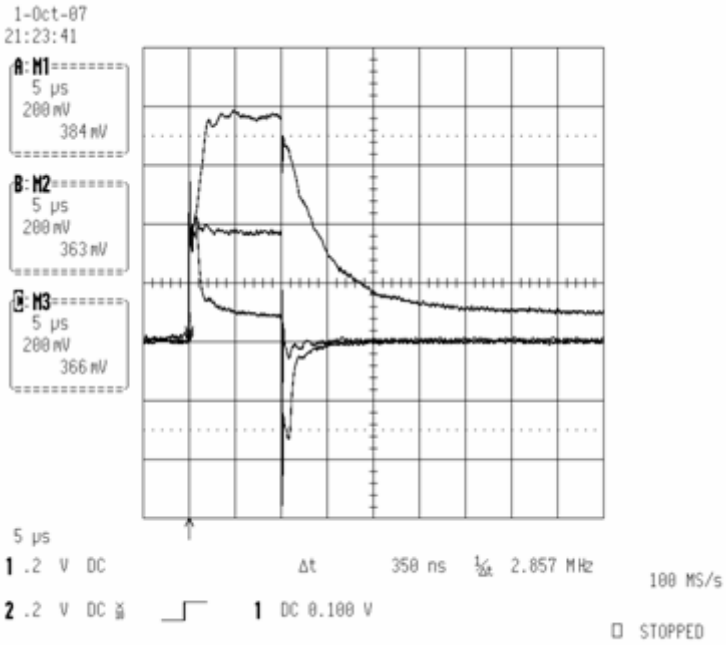

Dynamic Pulse Response

The first step is to establish the value of a load resistance R_L that will closely match the effective Z_o of the coupled inductor under test. This is done by applying a suitable pulse to the input of the Delay line (in this example we are using a 10 uS pulse) and then storing three traces:

a) Upper Trace: Delay Line is open at the output end

b) Middle Trace: Delay Line is terminated to a potentiometer adjusted to match Z_o Adjusted for “maximum squareness”

c) Lower Trace: Delay Line is shorted at its output end

What “maximum squareness” means is a matter of personal taste since there is always ringing and overshoots to have to deal with. However, when the potentiometer is close to the optimum value, small variations will make a big difference in the observed shape.

When the potentiometer is “dialed in”, it is then removed from the test bed and its resistance value measured with a VOM. In this example the result was 40.6 ohms.

If the iron welding rods are inserted into the core, no observable change is noticed in this series of measurements.

The next step is to expand our time base on the above pulse and store another three traces, following the same procedures as above.

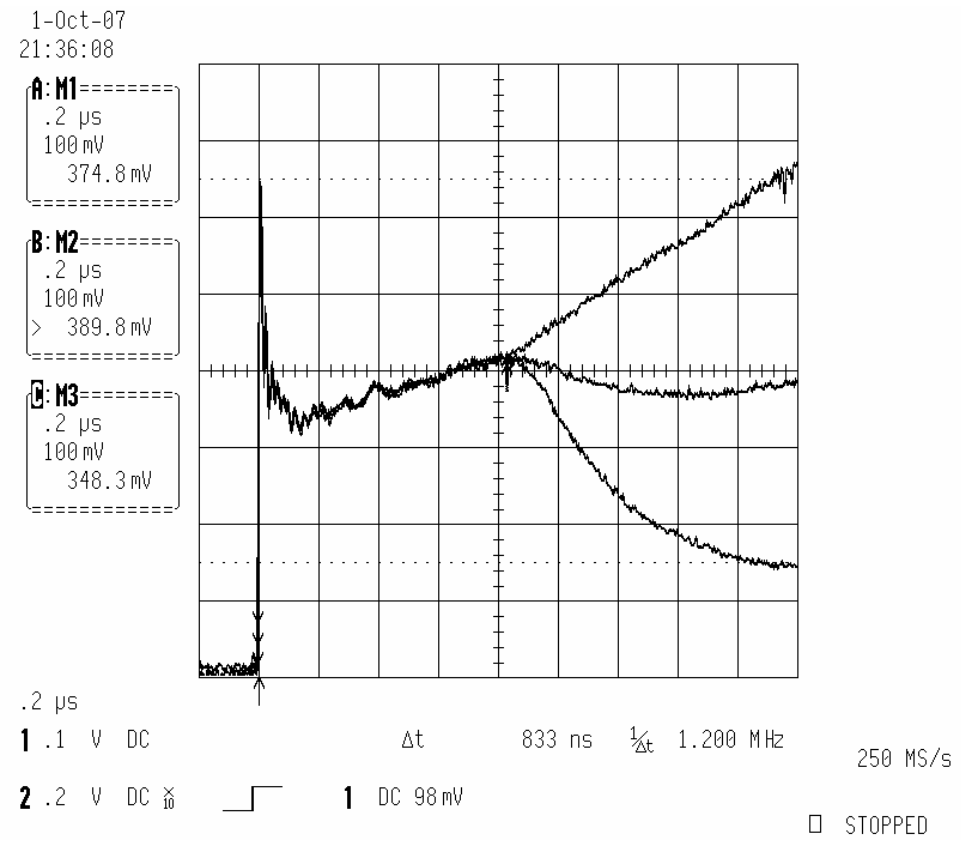

Leading edge of a pulse applied to a Bedini SG coupled inductor under three load conditions

Here, the time base has been expanded by a factor of 10X to view the leading edge of the applied pulse at 200 nS/div. The upper trace is the open condition. The middle trace is done with matched Z_o loading and the lower trace is the shorted condition. All three of these waveforms converge at one point. This point establishes how long it takes the applied pulse leading edge to travel to the end of the coupled inductor and return. The kind of load it finds attached at the end, then determines how it will respond from there on.

Measuring the time between the leading edge and this intersection, then dividing by 2 we arrive at the one way Delay Time for the coupled inductor under test. For this Bedini Coil we measure a T_d of 415.5 nS.

With this procedure we can go on to evaluate other kinds of FE coupled inductor systems:

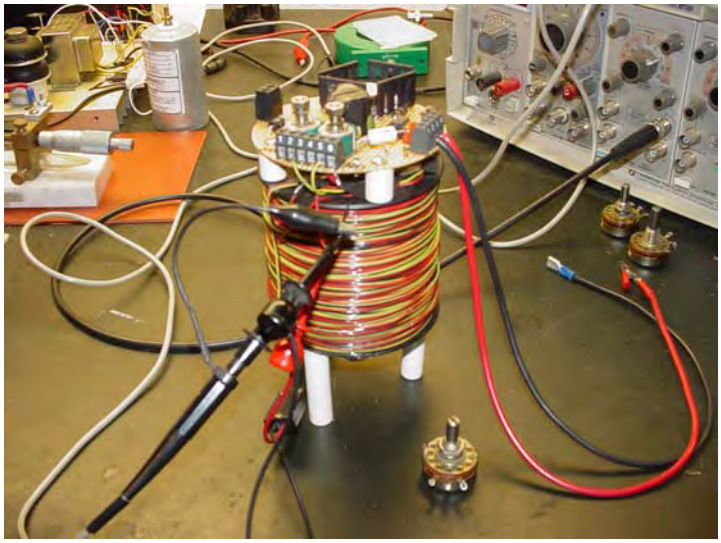

The Trifilar Lindemann Coil – 1000 Turns

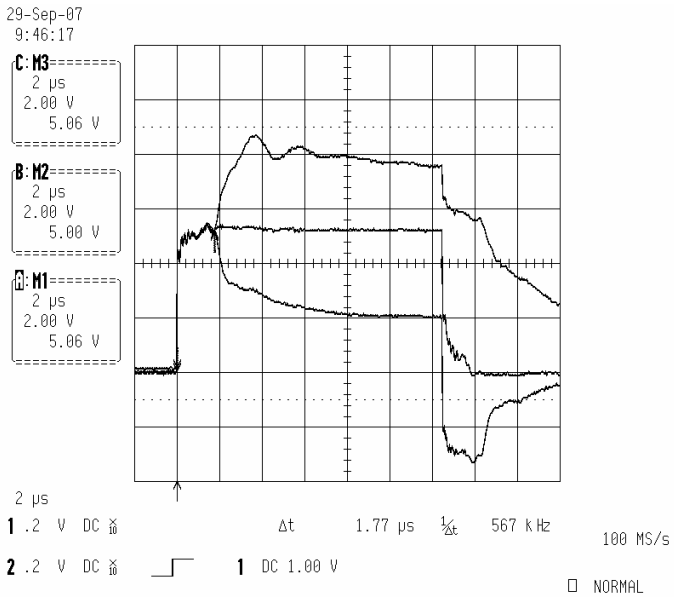

Z_o = 108 Ohms T_d of 885 nS.

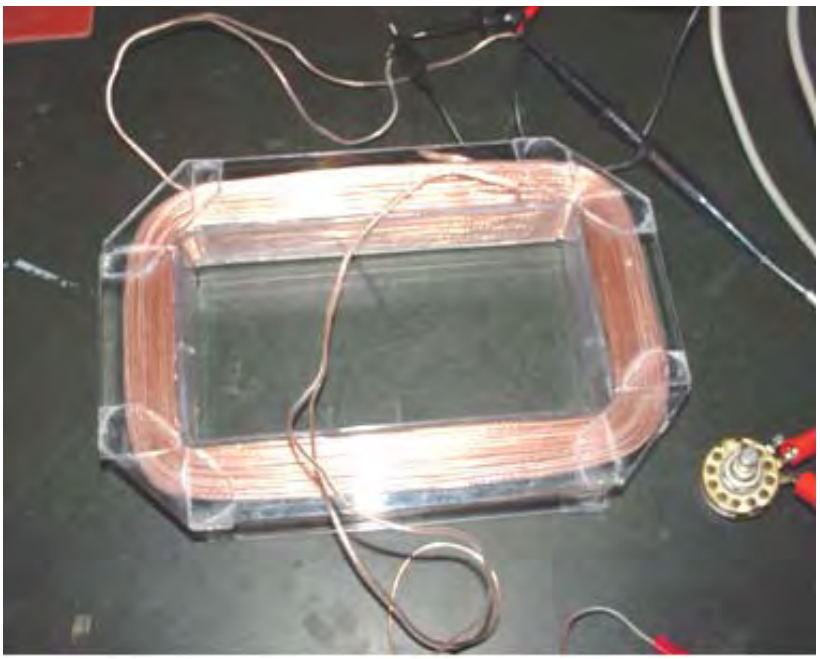

The Mike Motor Coil – 100' #22 Speaker Wire

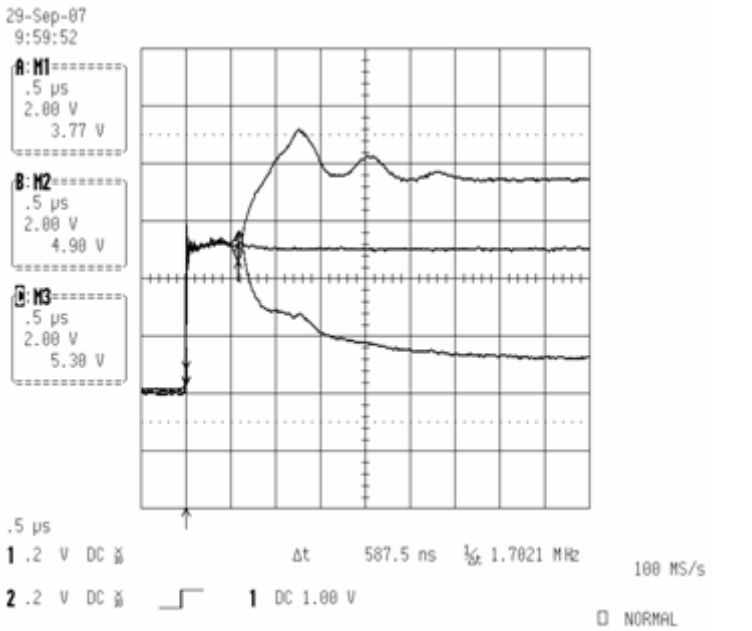

Z_o = 112 Ohms T_d of 293 nS.

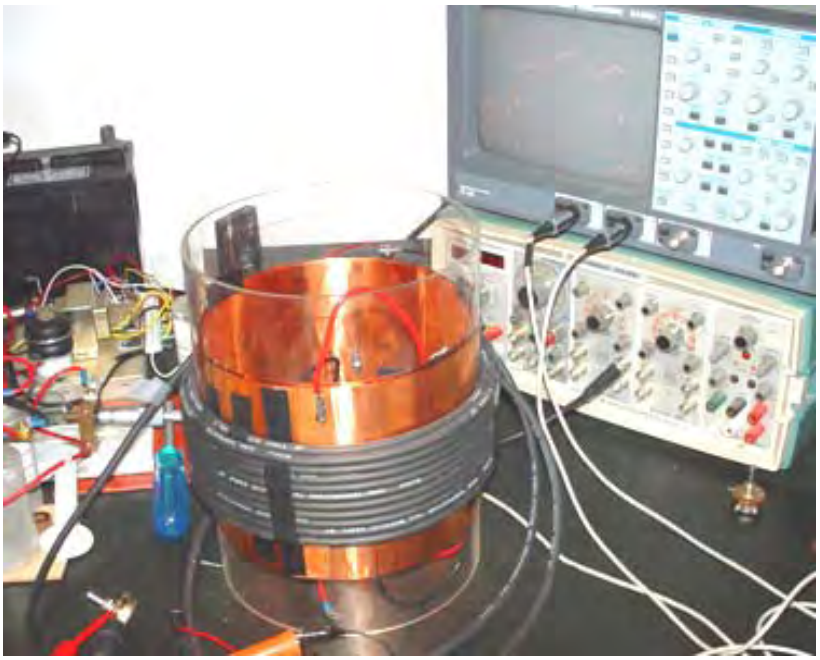

50 KV 8” Prototype Cole FFF

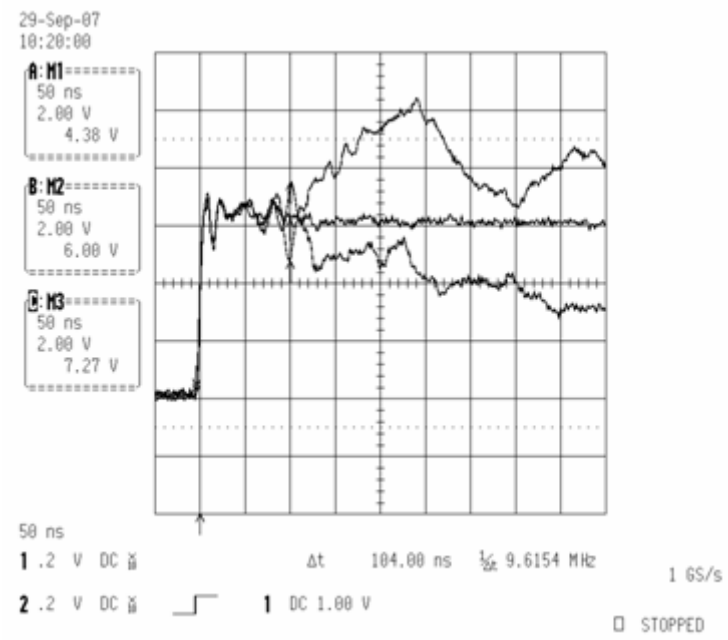

Z_o = 180 Ohms T_d of 52 nS.

Mike Brady's "Perendev" Magnet Motor

Patent Application WO 2006/045333 A1 4th May 2006 Inventor Mike Brady

PERMANENT MAGNET MACHINE

ABSTRACT

The invention provides a magnetic repellent motor which comprises: a shaft (**26**) which can rotate around it's longitudinal axis, a first set (**16**) of magnets (**14**) arranged around the shaft (**26**) in a rotor (**10**) for rotation with the shaft, and a second set (**42**) of magnets (**40**) arranged in a stator (**32**) surrounding the rotor. The second set of magnets interacts with the first set of magnets, and the magnets of both sets are at least partially screened so as to concentrate their magnetic field strength in the direction of the gap between the rotor (**10**) and the stator (**32**).

BACKGROUND

This invention relates to a magnetic repellent motor, or drive mechanism. Such a mechanism may be useful for driving an electrical generator, a vehicle, a ship, an aircraft, or the like.

Conventional power sources rely on fossil fuels or secondary power sources such as nuclear power, or electricity derived by whatever means, for its source of driving power. All of these sources of power suffer from disadvantages such as being the cause of pollution, requiring transportation or transmission over long distances to the point of use, and being costly to purchase. Thus, there is a need for a power source which is substantially pollution-free in operation, requiring substantially no external power, and which is simple to maintain.

SUMMARY

This invention provides a magnetic repellent motor which comprises: a shaft which can rotate about its longitudinal axis, a first set of magnets which are arranged around the shaft and which rotate with the shaft, and a second set of magnets arranged in a stator surrounding the rotor, where the second set of magnets reacts with the first set of magnets, both sets being partially screen magnetically in order to direct their magnetic field into a gap between the two sets of magnets. Thus, the interaction of at least some of the magnets of the first and second sets urge the shaft to rotate.

The interaction may be the net force of like magnetic poles repelling each other thereby urging the magnets away from each other, however, since only the rotor magnets can be moved by this urging force, the shaft is urged to rotate into a position where the repelling force is less.

The rotor may be substantially disc-shaped and the first set of magnets may be located in a peripheral region of the rotor which rotates with the shaft. The stator may be in the form of a pair of arms aligned with the rotor. These stator arms can be moved relative to each other and away from the rotor, in order to allow the gap between the rotor and the stator to be set selectively. The gap may be set manually, for example, by a hand wheel, or automatically, for example by a system of weights which move centrifugally and so form a rotational speed control which acts automatically, i.e. the smaller the gap, the greater the repulsion forces between the magnets of the rotor and stator.

Both the rotor and the stator may have more than one set of magnets. The magnets may be placed in sockets which extend towards the circumference of the rotor. These sockets may be substantially cylindrical and arranged in a plane which is perpendicular to the longitudinal axis of the rotor shaft. These sockets may also be arranged at an acute angle relative to the tangent to the circumference of the rotor disc where the mouth of the cylindrical socket is located. Similarly, the stator magnet sockets may be angled relative to the inner circumference of the stator. These angles may be between 18 degrees and 40 degrees, but preferably between 30 degrees and 35 degrees.

These sockets may have a socket lining consisting at least partially of a magnetic screening material. The socket lining may line the entire extent of the sockets so that only the opening to the exterior remains unlined. In another embodiment of the invention, the magnetic screen lining may cover a substantial percentage of the whole of the socket lining, e.g. 50% of the socket lining.

The magnets may be Nd-Fe-B of dimensions which fit snugly inside the linings of the sockets. These magnets may be cylindrical in shape and have a 37 mm diameter, a 75 mm length and a magnetic strength of 360,000 gauss. The socket lining, magnetic shield and magnet may all have a hole through them to receive a securing pin, preferably positioned so that it is parallel to the longitudinal axis of the shaft.

The number of sockets in the rotor and the corresponding stator may differ so that there is not a one-to-one relationship between the sockets in the rotor and the sockets in the corresponding stator. Similarly, the number of magnets in any additional rotor/stator sets may differ from the first rotor/stator sets in order that the two sets are out of register at any given time. Some sockets may be left empty in either the rotor or the corresponding stator, or both. The motor may have one or more rotor/stator pairs of this type arranged in a stack. It is preferable for the magnets of adjacent rotors to be out of register, i.e. staggered or offset relative to each other.

DESCRIPTION OF THE DRAWINGS

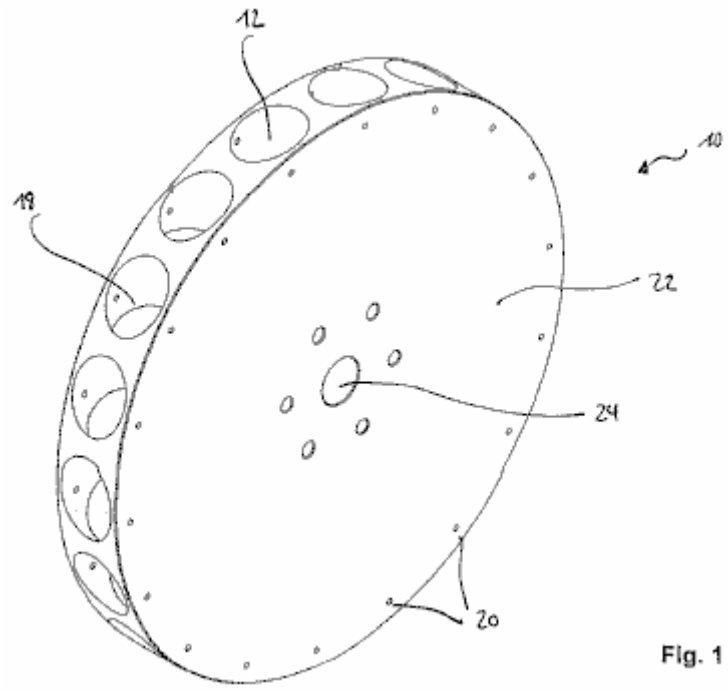

Fig. 1

Fig.1 is a perspective view which shows one rotor disc.

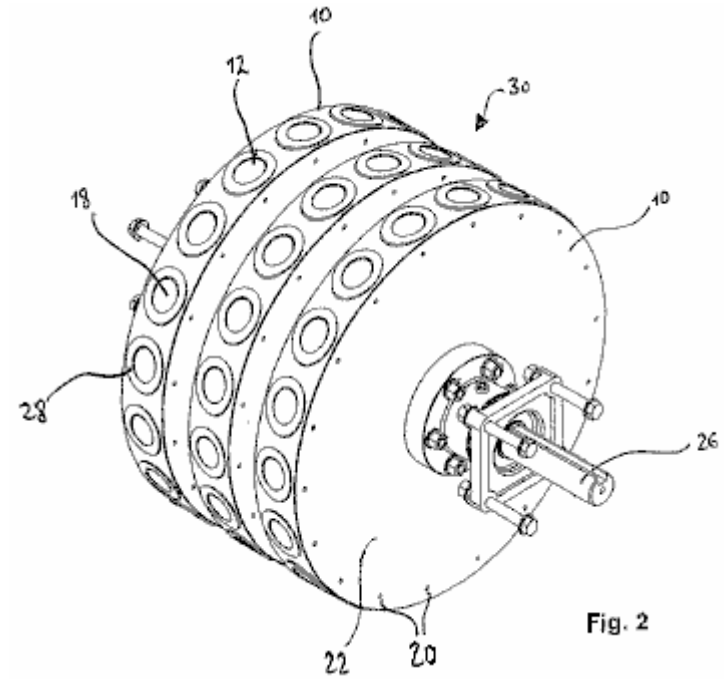

Fig. 2

Fig.2 is a perspective view showing a stack of the Fig.1 rotors in an assembled arrangement.

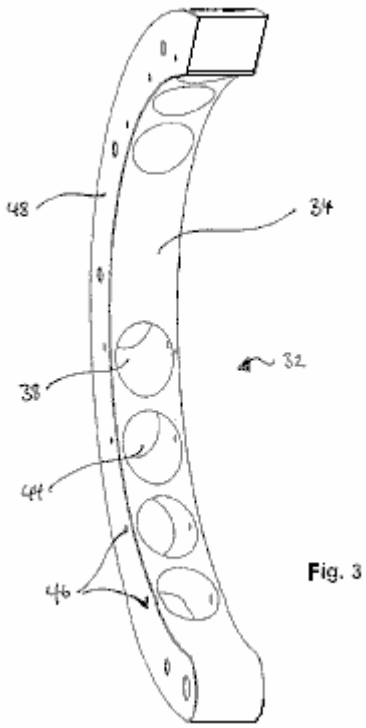

Fig. 3

Fig.3 is a perspective view showing a left arm of a stator.

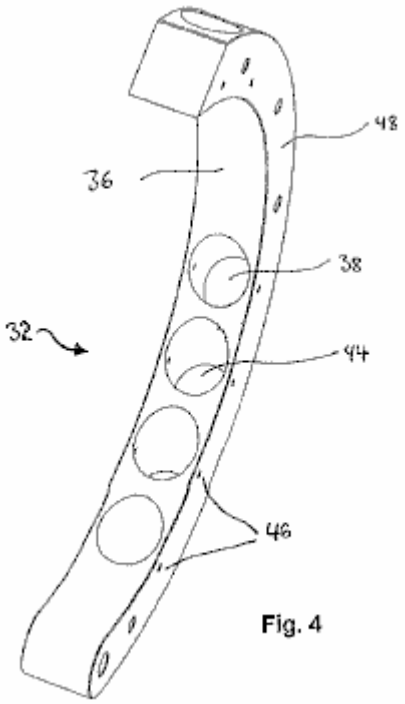

Fig. 4

Fig.4 is a perspective view showing a right arm of a stator

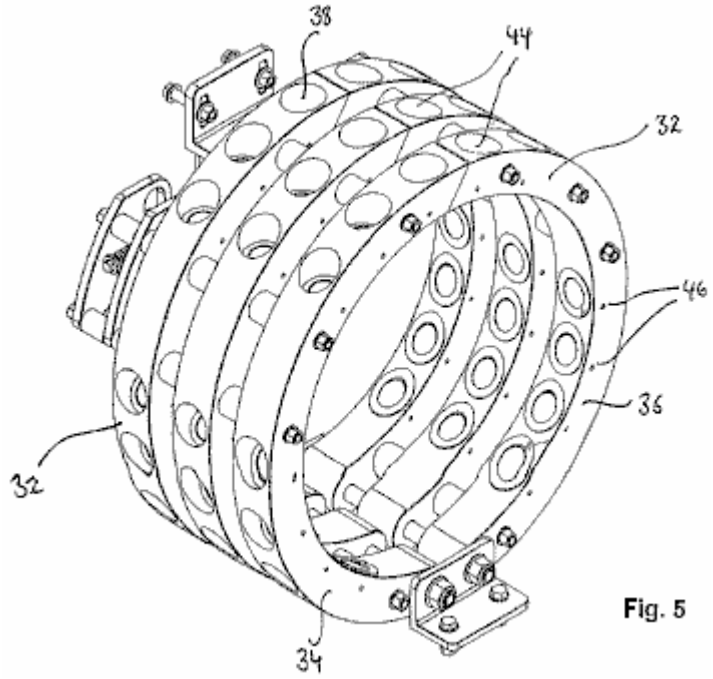

Fig. 5

Fig.5 is a perspective view showing a stack of the stators or Fig.3 and Fig.4 in an assembled arrangement.

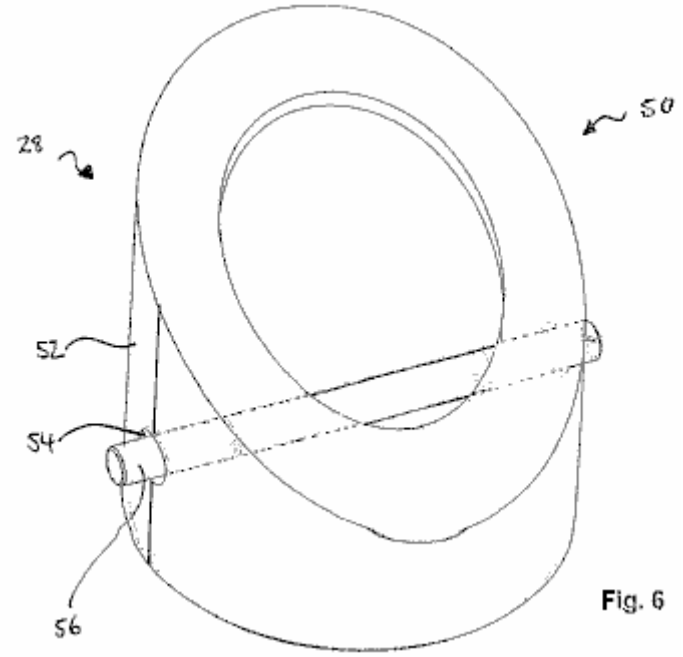

Fig. 6

Fig.6 is a perspective view showing a socket lining of a stator or a rotor.

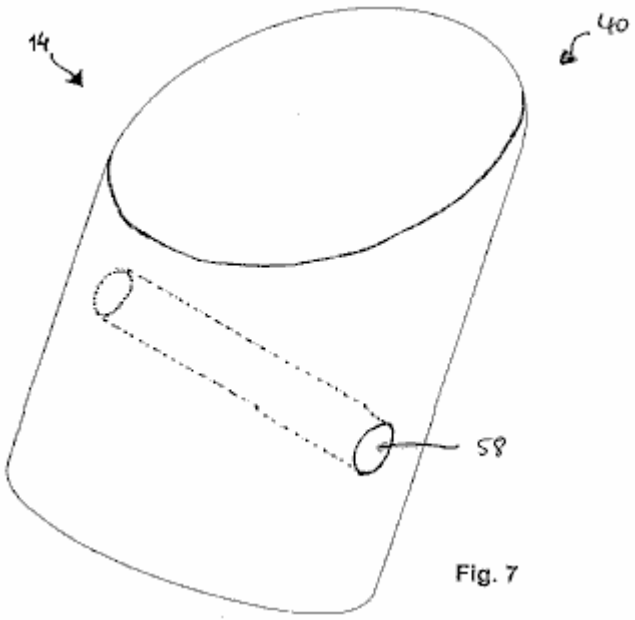

Fig.7 is a perspective view showing one of the magnets.

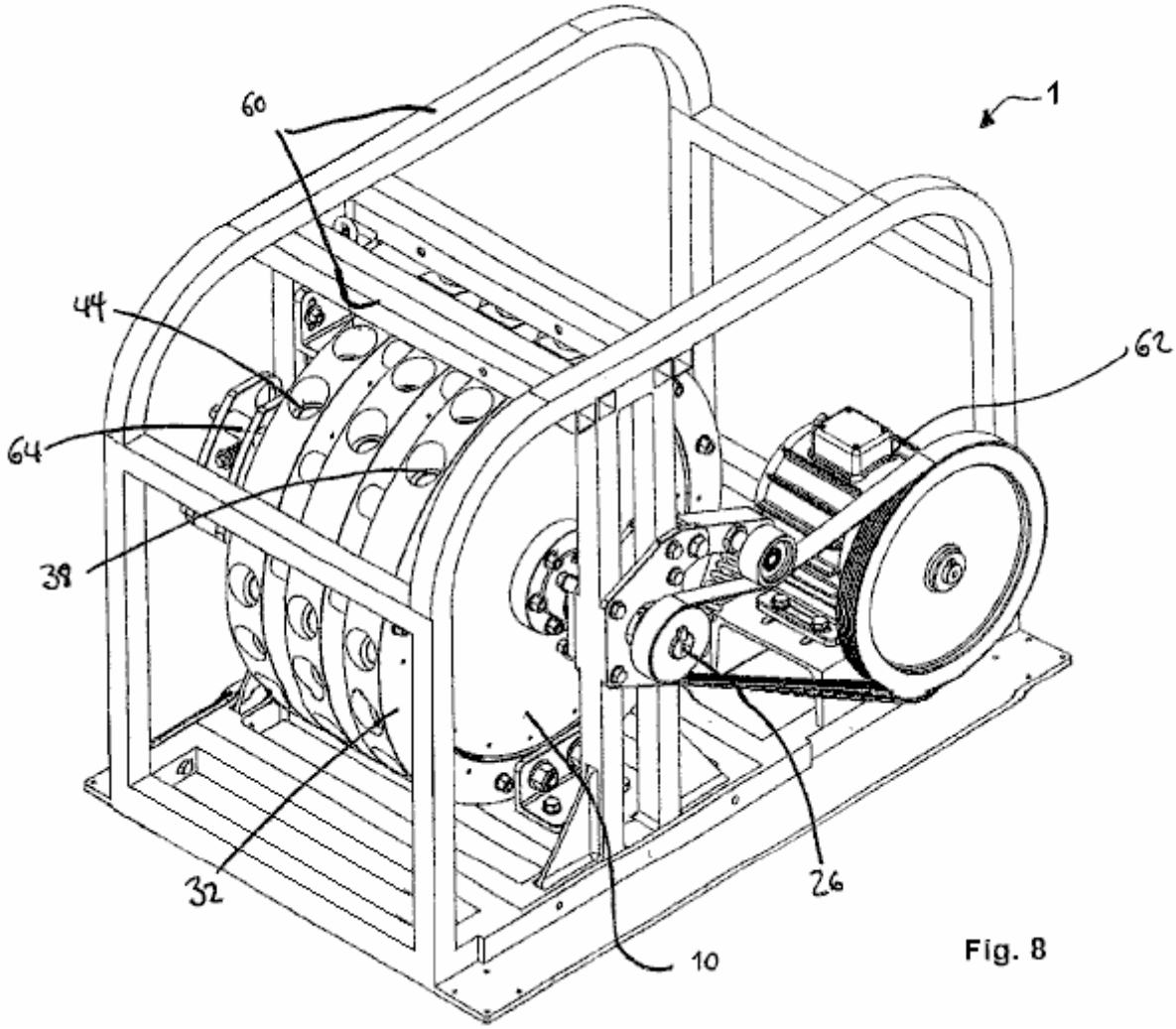

Fig.8 is a perspective view showing one embodiment of the magnetic repellent motor coupled to an electrical generator.

DESCRIPTION OF PREFERRED EMBODIMENTS

Referring to **Fig.1**, a substantially disc-shaped rotor **10**, is made from a non-magnetic material. The rotor **10** has a plurality of magnet receiving zones **12**, provided in it for receiving magnets **28** (shown in later figures)

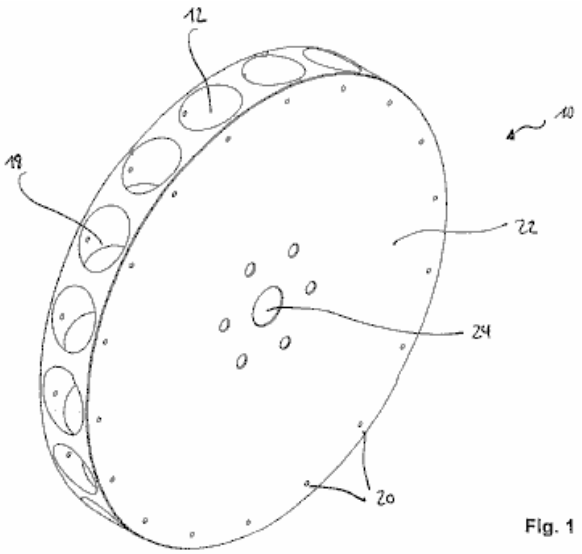

Fig. 1

of a first set **16** of magnets. The receiving zones **12** are in the form of circumferentially extending, spaced apart, and substantially cylindrical sockets **18** which are located in a plane which is perpendicular to the rotational axis **10** of the rotor and in a peripheral region of the disc.

In the region of the sockets **18**, the rotor **10** also has through holes **20** in it's side surfaces **22**, extending parallel to the rotational axis of the rotor. The rotor **10**, also has a centre hole **24**, to receive shaft **28** which is shown in later figures. The sockets **18**, are preferably angled at an acute angle relative to the tangent to the circumference of the rotor disc **10**, at the mouth opening of the sockets **18**. Ideally, this angle is between 18 and 40 degrees, and preferably between 30 and 35 degrees. In one particularly preferred embodiment, the angle is 34 degrees.

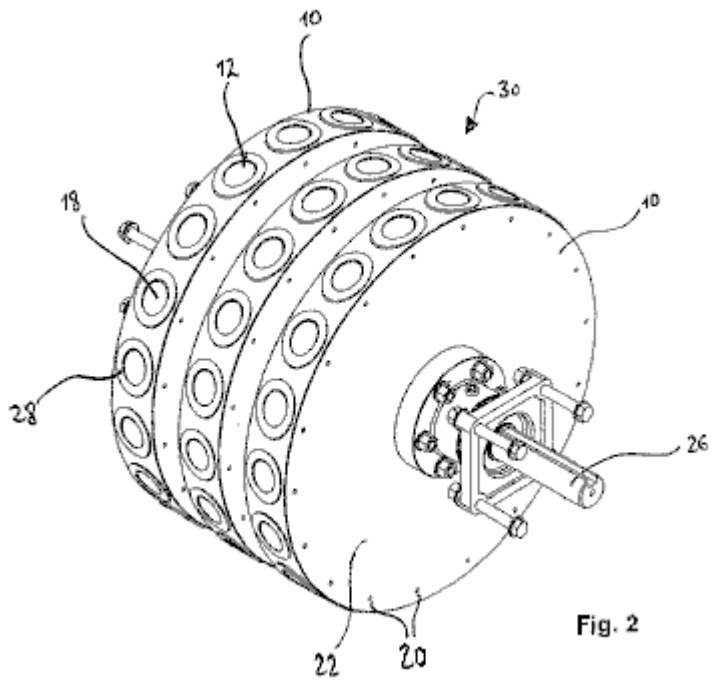

Fig. 2

As shown in **Fig.2**, the sockets **18**, receive (or incorporate) a socket lining **28** (shown in more detail in later figures) which is at least partially made of a magnetic screening material, whether metallic or non-metallic, for example, graphite. The socket lining **28**, covers the entire extent of the sockets **18**, so that only the opening to the exterior remains uncovered.

In the rotor assembly **30** of **Fig.2**, three rotors discs **10**, have been stacked in a row on the shaft **26**. The connection between the rotor discs **10** and shaft **26**, as well as between the rotor discs themselves, can be established via linking means which are widely known. In general, the motor may have any number of rotor discs **10**, and corresponding stators **32**, since the effect of using several rotor discs **10** in parallel, is cumulative. However, it may be useful for smooth operation of the motor **1**, to arrange the rotor discs **10** so that the magnets of adjacent rotor discs are staggered, or offset relative to each other.

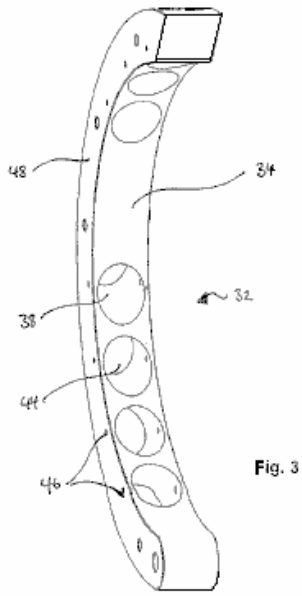

Fig. 3

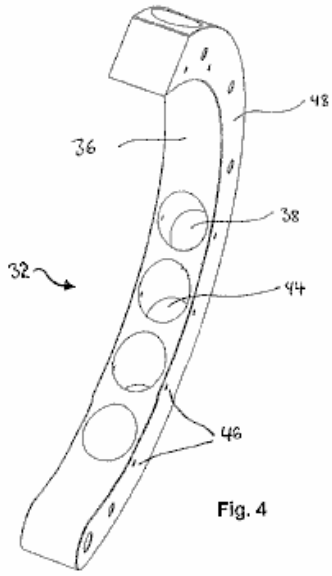

Fig. 4

Referring to **Fig.3** and **Fig.4**, a stator **32** is shown. This stator is made of a non-magnetic material. The left arm **34**, and the right arm **36**, combine to form the stator **32**. Each of the arms, **34** and **36**, has a substantially semi-circular shape and is sized so as to enclose the corresponding rotor disc **10** in the radial direction, while still leaving a gap between the stator **32** and the rotor disc **10**. The arms **34** and **36** of one stator **32**, can be moved relative to each other and their corresponding rotor disc **10**, so that the gap between the arms and the rotor disc can be set at different values.

The stator **32** has several magnet receiving zones **38**, ready to accept the magnets **40**, (which are shown in a later figure) of the magnet set **42**. These receiving zones are again in the form of circumferentially extending, substantially cylindrical sockets **44** which are positioned in a plane which is perpendicular to the longitudinal axis of shaft **26**. In the region of the sockets **44**, the stator **32** has through holes 46 arranged in it's side surfaces **48**, these holes extending parallel to the longitudinal axis of the shaft **26**.

These sockets **44** are again angled at an acute angle relative to a tangent to the inner circumference of the stator **32** at the mouth opening of the sockets **44**. This angle is preferably between 18 and 40 degrees and more preferably, between 30 and 35 degrees. The angle of the sockets **18** and **44**, and the relative positioning between them, has to be adjusted to allow for a good performance of the motor.

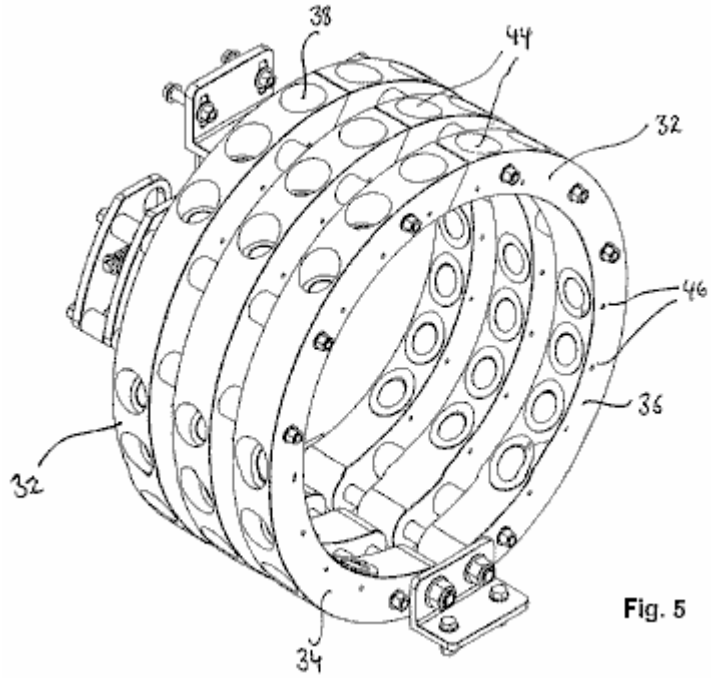

Fig. 5

Fig.5 shows a stator assembly consisting of three stators designed to fit the rotor assembly of **Fig.2**. As described with reference to the sockets **18** of **Fig.2**, the sockets **44** receive (or incorporate) a socket lining **50** (shown in more detail in later figures), which is at least partially made of a magnetic screening material. The socket lining **50**, covers the entire extent of the sockets **44** so that only the opening to the exterior remains uncovered.

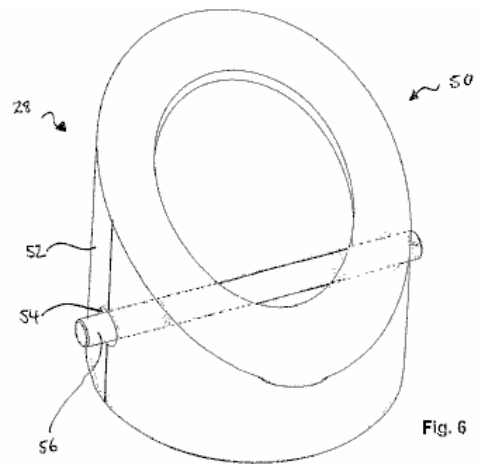

Fig. 6

Referring to **Fig.6**, a socket lining **28, 50** of the rotor disc **10**, or the stator **32**, is shown in more detail. The socket lining **28, 50** is formed to fit into the sockets **18, 44** and may be made completely of a material which has magnetic screening properties. In one preferred embodiment, the socket lining **28, 50** is made of diamagnetic graphite and is partially surrounded by an additional shield **52** of a material having strong magnetic screening properties, e.g. stainless steel. In the embodiment shown in **Fig.6**, the shield **52** surrounds about 50% of the socket lining surface.

Thus, by at least partially covering the sockets **18, 44** with a magnetic screening material, the magnetic field of the inserted magnets **14, 40** is, so to say, focussed axially with the socket **18, 44**, rather than dissipated about the magnets.

Further, holes **54** through the socket linings **28, 50** are provided and these correspond to the through-holes **20** and **46** in the rotor disc **10** and the stator **32**, respectively. Thus, a retaining pin **56** may be inserted after magnet **14, 40** has been put in socket **18, 44** to make a detachable fixing for magnet **14, 40** to the socket lining **28, 50** and the socket **18, 44** so as to prevent expulsion of the magnetic sources during operation.

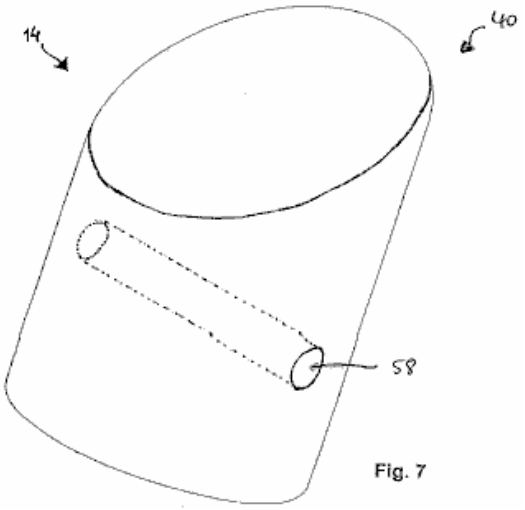

Fig. 7

Fig.7 shows a typical magnetic source **14,40** used in this motor design. The magnetic sources **18, 40** may be natural magnets, induced magnets or electromagnets. The magnetic source for example, is a Nd-fe-B magnet which has the necessary dimensions needed to fit neatly into socket **18, 44** and socket lining **28, 50**, respectively. In one preferred embodiment, the magnetic source **18, 44** is a substantially cylindrically shaped magnet with a diameter of 37 mm, a length of 75 mm and provides 360,000 gauss. However, the magnetic source **18, 44** may be shaped differently to cylindrical and may have different characteristics. In any case, the magnetic source **18, 44** must have a through-hole **58** to receive the retaining pin 56.

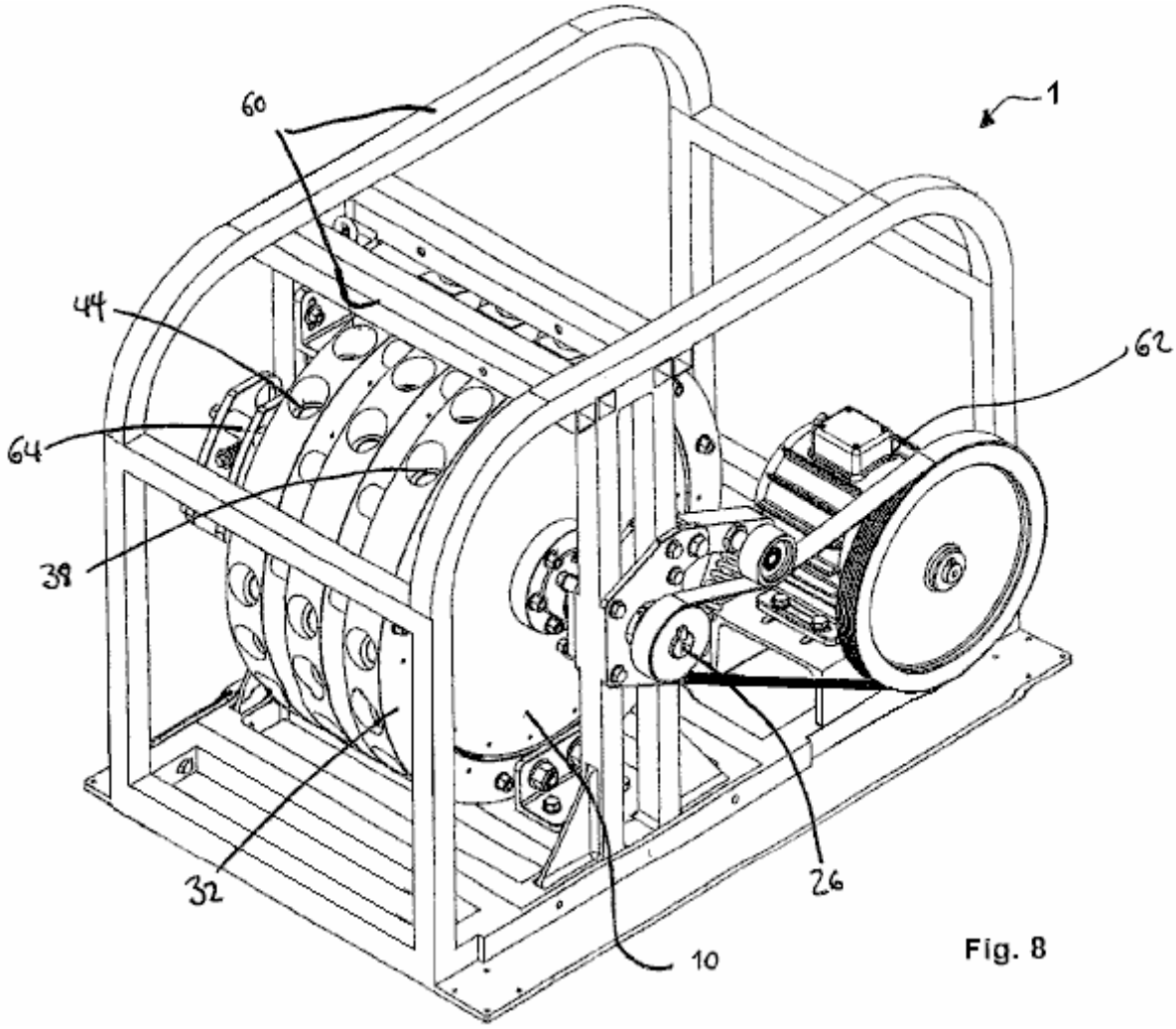

Fig. 8

The magnet motor shown in **Fig.8** is mounted on frame **60** and is coupled to an electrical generator **62**. In this specific embodiment, the motor has three rotor discs **10** of the type already described. These are mounted on a single rotating shaft **26** and are driven by three stators **32**, as already described, causing shaft **26** to rotate about it's longitudinal axis. Shaft **26** may be connected to a gearbox in order to gain a mechanical advantage. The stator arms can be moved by a stepper motor **64**.

The number of sockets in the rotor discs **10** and their corresponding stators **32** may differ so that there is not a one-to-one relationship between the sockets **18** in the rotor disc **10** and sockets **44** in the corresponding stator **32**. Similarly, the number of magnetic sources in the stator **32** and the rotor disc **10** may differ so that a proportion of the magnetic sources **14, 40** are out of register at any given time. Some sockets may be empty, i.e. without a magnetic source, in either the rotor disc **10** or the stator **32**, or both.

The sockets **18** of the rotor discs **10** can be staggered, i.e. offset relative to the sockets of adjacent rotors, or they can line up in register. Thus, the magnet motor may be time-tuned by the relative positioning of the magnetic sources **14** of adjacent rotor discs **10**.

Thus, the interaction of at least some of the magnetic sources **14, 40** of the first and second set **16, 42** urges the shaft **26** to rotate. Once the shaft begins to rotate, the plurality of simultaneous interactions causes shaft **26** to continue rotating.

As mentioned before, the motor can have any number rotor discs **10** and corresponding stator sets **32**. Although the precise adjustment of the motor elements is important, one may imagine other embodiments covered by this invention.

The Magnet Motor of Donald A. Kelly

Patent US 4,179,633 **18th December 1979** **Inventor: Donald A. Kelly**

MAGNETIC DISC DRIVE

ABSTRACT

This permanent magnet disc drive consists of two basic magnetic components, one large driven flat disc containing a uniform series of identical magnet segments, and a second magnetic driving means comprising multiple oscillating magnetic pairs of opposite identical magnet segments. The magnetic mechanism simulates the action of a clock escapement mechanism in that the oscillating magnet pairs uniformly oscillate between the disc magnet segments to induce continuous disc rotation. All of the multiple oscillating magnet pairs are oscillated by a motor, or motors, which provide an eccentric movement through a suitable gear reduction unit. The small DC motors are powered by multiple arrays of silicon solar photovoltaic cells at some convenient rooftop location.

US Patent References:

4,082,969	Magnetic torque converter	April, 1978	Kelly	310/103
4,100,441	Magnetic transmission	July, 1978	Landery	310/103

BACKGROUND OF THE INVENTION

At the present time the magnetic disc drive has reached the stage of development where the oscillating magnet pairs will rotate the magnetic segmented disc when the oscillations is done manually. The disc rotation is smooth and continuous when the manual oscillation is uniform and continuous, and the disc speed may be increased as the oscillation rate is increased.

Since the adequate functioning of the magnetic/mechanical-conversion concept has now been proven with a working prototype, a practical and economical self and/or external oscillation means for the oscillating magnetic pairs must now be developed. The magnetic disc drive was originally designed to be self-actuated by means of a multi-lobe cam and push rod arrangement, but this approach has not been proven successful to date.

A disadvantage for the self-actuated type of magnetic disc drive is that the disc is locked-in with a low, fixed speed output which is dependant on the natural magnetic field interaction between the involved interacting magnet segments.

A mid-diameter direct displacement multi-lobe cam was used for the first prototype, but this did not work because of the high rotational resistance imposed by the high cam lobe angles. A peripheral, direct displacement multi-lobe cam was also tried but this was not successful because of the moderate and sufficient cam lobe resistance to push rod displacement.

Other cam lobe configurations are being planned and developed to make sure that no possible trade-off to self-actuated mechanical oscillation is overlooked. Another possible approach to self-actuation for the magnetic disc drive is by the application of a twin level magnetic commutator which is directly connected to the disc drive shaft. The magnetic commutator segments alternately attract corresponding radial magnets on pull-rods which are pivoted on each of the oscillation plates of the magnetic pairs.

While auto-actuation of the magnetic disc units may be desirable for some self-contained power applications, the low, fixed speed output is not considered attractive and promising for a wide range of household power applications. Because of the inflexibility of speed output of the auto-actuated type of unit the, the development of a variable speed, externally oscillated type of disc unit is required to meet the growing demand for alternate and auxiliary power means for many applications.

The matching of a large magnetic disc drive and small solar powered DC electric motors is a nearly ideal arrangement since a single or series of small precision DC motors can be readily powered by modest arrays of silicon photovoltaic cells located at some convenient rooftop location. Small high-efficiency, ball bearing DC motors are available which, when connected to suitable gear reduction drives, can revolve a simple eccentric mechanism with sufficient power and variable speed, to cause oscillation of a series of four to six magnetic oscillating pairs of stator magnets.

This series of magnetic oscillating pairs will all be connected together with straight linkage to transmit the reciprocating motion from the driving oscillating shaft to the other oscillating shafts of the series. This is a more desirable multiple driving arrangement rather than separate small DC motors since synchronism is automatically assured, rather than more complex and less reliable electrical synchronization requirements. Because there is no locked-in synchronism for this type of external oscillation means, the multiple magnetic oscillation pairs must be of the minimum interference type, in that they must not become jammed into the disc magnet segments. Although the proper functioning of the magnetic disc unit requires that the oscillating magnet pairs must enter the disc's magnet segment interference circle, deflection means must be added to all of the oscillation plates to insure that the continuously revolving disc will readily by-pass all of the oscillating magnet pairs.

The large magnetic disc unit will consist of a basic non-magnetic circular disc, on which multiple high energy permanent magnet segments are equally spaced around the rim of the disc. The drive shaft of the disc rotates on precision ball-bearings and may be chosen to revolve in either a horizontal or a vertical plane. The disc is the driven component of the magnetic drive assembly, and it can be connected to the load or an electrical generator.

The multiple oscillating magnet pairs are the driving component of the disc drive unit and consist of flat, non-magnetic oscillation plates, on which identical high-energy permanent magnets are secured at each end of these oscillating plates. The magnet segments are placed with opposite poles exposed at the sides, relative to each other so that a north-south pole couple reacts on the disc's magnet segments. The driven disc's direction of rotation depends on the polarity of the disc's magnets in relation to the oscillating magnetic pairs.

The oscillating magnetic pairs will make a full back and forth oscillation between two adjacent local disc magnet segments so that an alternate "pull and push" effect is induced on the magnetic segmented disc. The basic synchronism between the disc's magnet segments and the multiple oscillating magnet pairs closely simulates the action of a watch or clock escapement mechanism in respect to the natural "cogging" action between the functioning components.

This general magnetic disc drive arrangement insures smooth and continuous rotation for the driven disc with an optimum of magnetic energy interchange between the oscillation stations and the magnetic disc because of near pole face to pole face exposure. It is now believed that this present type of magnetic disc drive is approaching a theoretical maximum of conversion performance possible, especially when compared with other types of magnetic/mechanical arrangements such as magnetic worm and worm discs, spur couples, mitre couples, and all types of inferior, linear magnetic devices.

The attractiveness of the basic magnetic disc and oscillating pairs is that a nearly ideal leverage factor is introduced in magnetic/mechanical conversion arrangements. Simply stated, considerably less energy is needed to oscillate the oscillating pairs than is produced from the near pole face to pole face magnetic interaction between the functioning magnetic components.

The alternating and uniform "pull and push" force imposed by the oscillating magnet pairs on the disc magnet segments produces no direct back or counter force reaction on the driving oscillating magnet segments which is the master key for a useful and practical magnetic/mechanical conversion drive. The back or counter-reacting force on the oscillating magnet pairs is taken directly by the fixed pivots of the oscillation plates, with a minimum of load penalty imposed on the drive of the oscillating magnet pairs.

All other types of rotary magnetic/mechanical conversion devices, with the possible exception of the worm and worm disc type, produce an undesirable back reaction force on the driving component and resulting ineffective performance. The magnetic worm and worm disc units have not proven to be sufficiently worthwhile for commercial applications because of the very high permanent magnetic energy necessary and due to the low speed output of these mechanisms.

When configuration comparisons are made of all types of possible magnetic/mechanical conversion devices it will be noted that the combination of a magnetic disc driven by multiple oscillating magnet pairs will stand out as a practical and useful permanent magnetic conversion arrangement. The incentive for the development of this magnetic disc drive was the direct outgrowth of overall disappointing performance of solar energy conversion efforts and the frustrations encountered with component costs, conversion efficiency and a lack of suitable energy storage means. While solar energy is being widely hailed for its future potential as a viable alternate energy source, relatively few engineers speak out about relatively poor overall cost/effectiveness due to days-on-end of overcast skies during the winter months when the energy is most needed, especially in northern latitudes.

Because of the less-than-adequate solar energy conversion outlook for the vast majority of American homeowners, other alternate, small scale, decentralised, energy sources must be explored and developed on a crash program basis. If this is not done within the next several decades we must accept the alternative of a greatly reduced standard of living because of the alarming rise in the rate of energy costs.

This magnetic disc drive represents a practical solution in applying permanent magnetism in the development and commercialism of a decentralised, silent, fuel-free, household-sized alternate power system. While the power output from an individual magnetic disc unit may be small, the power output is constant and does not generally depend on the intensity of an external energy source, as do present solar energy systems.

SUMMARY OF THE INVENTION

The magnetic disc drive unit is comprised of a large driving disc made of non-magnetic metal on which several permanent magnets are equally spaced around the rim. The disc drive shaft rotates on trunnion supported ball bearings and may revolve in nearly any conventional position, and may be constructed with any practical large diameter.

The identical oscillating magnet pairs are the driving component of the disc drive and consist of flat, non-magnetic plates on which, pairs of identical permanent magnets are secured at both sides of the oscillation plates. These magnet pairs have opposite pole faces facing each other. The disc's direction of rotation is determined by the polarity of all the disc's magnets relative to the polarity of the oscillating magnet pairs.

The oscillating pair of magnets make a full back and forth oscillation while each rotor disc magnet passes by. This produces a pull on the disc magnet as it approaches the oscillator magnet and then when the oscillator moves that magnet away, a push force is applied to the magnet on the rotating disc by the second magnet of the oscillating pair of magnets. The synchronisation of the disc and the oscillating magnet pairs must be maintained for continuous and smooth rotation of the disc. This movement is similar to the action of a clock escapement-mechanism.

The method of moving the oscillating pairs of magnets is one or more solar-powered DC motors. These motors drive push rods which are in contact with ball bearings mounted on the oscillation plates. Since the eccentrics must move at relatively slow speeds, suitable gear reduction units must be used between the motors and the rocker arms.

In order to maintain proper synchronisation of all of the oscillating components, straight links are used to connect all of the driven oscillation shafts to the driving oscillation shaft. Four or five oscillation stations can be driven from one driver oscillation shaft so that a disc drive with a large number of oscillation stations will require several D.C. motors to drive all of the other oscillation shafts.

It is important that the multiple, identical oscillation plates and their magnet pairs be slightly shorter in width than the space between two adjacent disc magnet segments, so that an optimum pull and push force is induced on the local disc magnet segments. One side of the oscillating magnet couple "pulls" on the disc's permanent magnet and then the other oscillator magnet "pushes" the disc's permanent magnet onwards as it has been moved into place by the oscillation.

All of the oscillating magnet pairs oscillate on stationary rods, or shafts, and all of the eccentrics and DC motor drives remain fixed on a base plate. The other ends of the oscillating rods or shafts must be supported by some form of bracket to keep the oscillation plates parallel to the disc magnet segments. Each eccentric which moves a ball bearing attached to arms on the oscillation plates must make one full 360 degree revolution within the angular displacement arc between two adjacent rotor disc magnet segments. Two small pivot brackets are attached to the extreme, non-magnetic ends of the oscillation plates to allow these plates to oscillate freely with a minimum of friction.

The basic rotational relationship between the magnetic oscillating pairs, and the magnetic segmented disc, will have a bearing on the gear reduction ratio required for the gear drive unit coupled to the small DC motors. Fairly rapid oscillation is necessary to maintain a reasonably acceptable disc speed which will be required for most power applications. The size of the eccentrics which oscillate the oscillating magnet pairs will be determined by the full oscillating arc needed and the mechanical advantage required by the oscillation plate in order to cause the optimum rotation of the magnetic disc drive unit.

Proper magnetic disc drive functioning requires the pulling magnets of the oscillating magnet pairs to enter the disc's interference circle within the mutual magnetic field zone between the two local interacting magnets on the disc's rim. Since the disc will revolve continuously, the withdrawing phase of the "pulling" magnets brings the "pushing" magnets of the couple into the disc's interference circle within the mutual magnetic field zone, for effective interaction with the adjacent disc magnet segment.

All of the magnet segments on the oscillation plates which form the magnetic couples must be in line with the corresponding disc magnet segments in order to maintain an optimum interaction between them.

Because there is no natural, lock-in synchronism for this type of magnetic disc drive, the multiple magnetic oscillating magnet pairs must be of the minimum interference type, which consists of adding plastic deflectors to the oscillation plates to prevent the pulling magnets of the couple from jamming into the disc magnet segments. Since the oscillating magnet pairs must never jam into the disc and stop its rotation, the plastic deflectors will allow the oscillation plates and magnet pairs to be deflected away from all of the disc magnet segments.

The permanent magnets selected for both components of the disc drive must be uniformly identical and have the highest possible energy product or magnetic induction plus coercivity. Both of these magnetic properties will play a significant role in determining the true value of the magnetic disc drive unit. At the present time the rare-earth/cobalt permanent magnets offer the highest possible magnetic properties for this application, but their cost is very high and currently not considered cost effective for the magnetic disc drive. Since costs will also play a major role in the competitive value of the disc drive, the magnets selected must show the highest possible cost/effectiveness ratio, along with long operating life.

Rectangular ceramic permanent magnets with large flat pole faces are preferred for the disc drive prototypes, and there is no theoretical limit to the size of both interacting components. A practical limit to the actual size of the components is imposed by weight and material cost restrictions plus available space, but nearly any practical number and size of uniformly identical magnets may be used to make up the magnetic disc drive.

It will be advantageous to build up each disc magnet station into clusters of up to about twelve to twenty four individual magnets which are arranged in lengths of four or five units and double or triple widths depending on the disc diameter. A large diameter disc unit is always desirable since the torque output for the disc unit depends on the tangential magnetic force produced by all of the oscillating magnet couple stations multiplied by the disc radius.

The large diameter disc speed will be relatively slow, in the 20 to 30 r.p.m. range, so that the disc output speed must be stepped up to a useful 750 to 1200 r.p.m. speed range, by a belt drive arrangement. The magnetic disc drive output is best adapted to run an electrical generator or alternator to produce electrical power for various household purposes.

An advantage to using silicon photovoltaic solar cells on an exposed rooftop location as a power source, is that they are capable of providing a partial E.M.F. under non-sunlight/overcast sky conditions. With full sunlight exposure the electrical energy produced will run the magnetic disc drive at its maximum possible speed, with reduced sunlight levels producing a corresponding proportionate reduction in the disc output speed.

A workable option exists for using a greater number of silicon photocells than would be normally necessary for full sunlight operation. The number of cells selected would be capable of running the magnetic disc drive at full speed under overcast sky conditions, with any excess full sunlight current bypassed to storage batteries. This option is a desirable arrangement since the disc will be assured of full electrical input power each day, with battery power available to make up the loss from any dark daytime sky conditions.

The principal object of the invention is to provide the highest torque output for the large driven disc from the lowest possible torque input for the multiple oscillating magnet pairs, as a useful power step-up means for electrical generating applications.

Another object of the invention is to provide a step-up power source which can be produced at competitive costs, requires no combustible fuel and is non-polluting while running silently and continuously.

It is a further object of the invention to provide a natural energy source which has an extremely long operating life, with a maximum of operating effectiveness, component resistance to degradation, with a minimum of parts replacement and maintenance.

The various features of the invention with its basic design geometry will be more apparent from the following description and drawings which illustrate the preferred embodiment. It should be understood that variations may be made in the specific components, without departing from the spirit and scope of the invention as described and illustrated.

Referring to the Drawings:

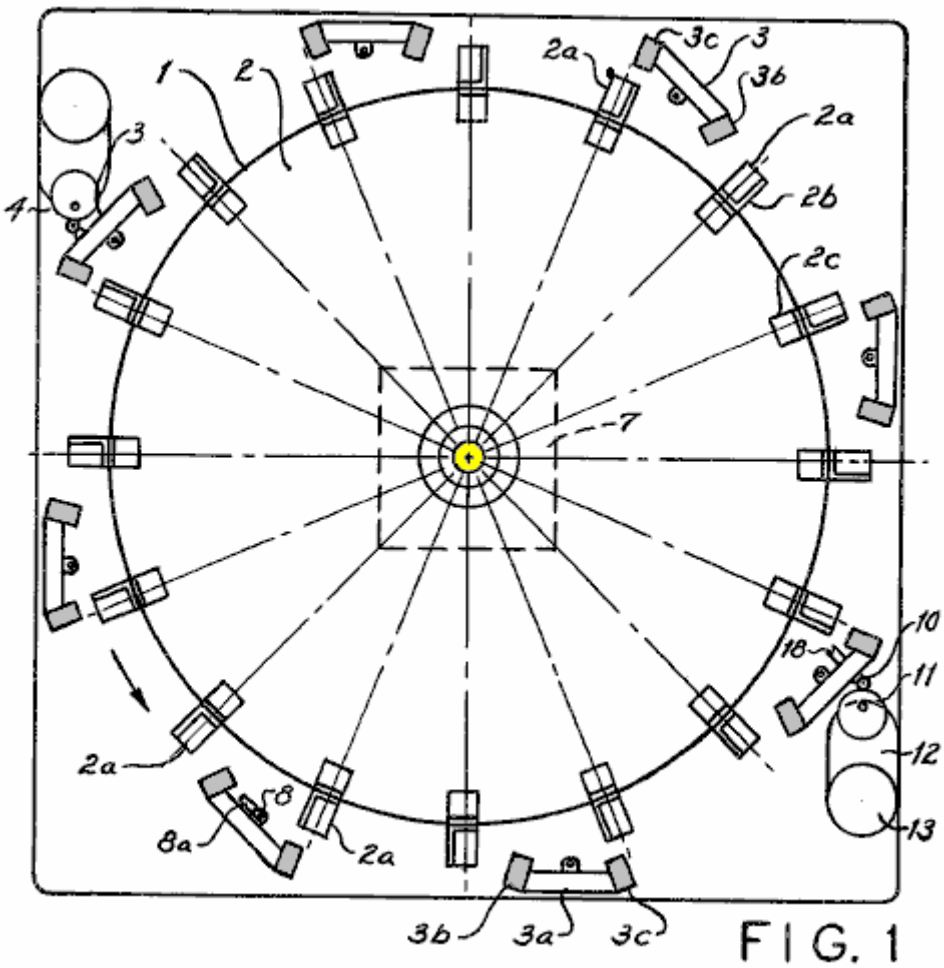

Fig.1 is a top, external view of the magnetic disc drive.

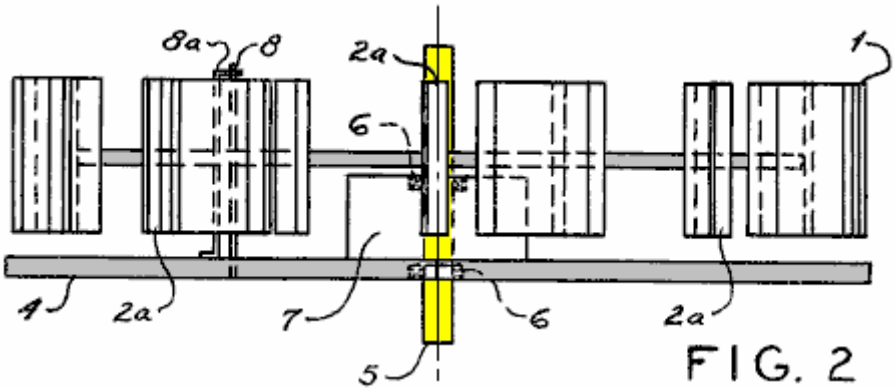

Fig.2 is an external side view of the magnetic disc drive.

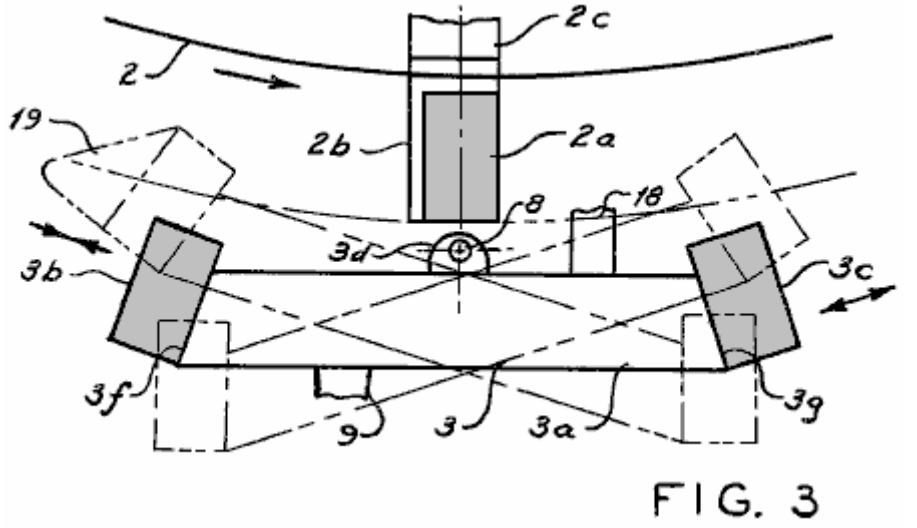

Fig.3 is an enlarged top view of one oscillating magnet couple.

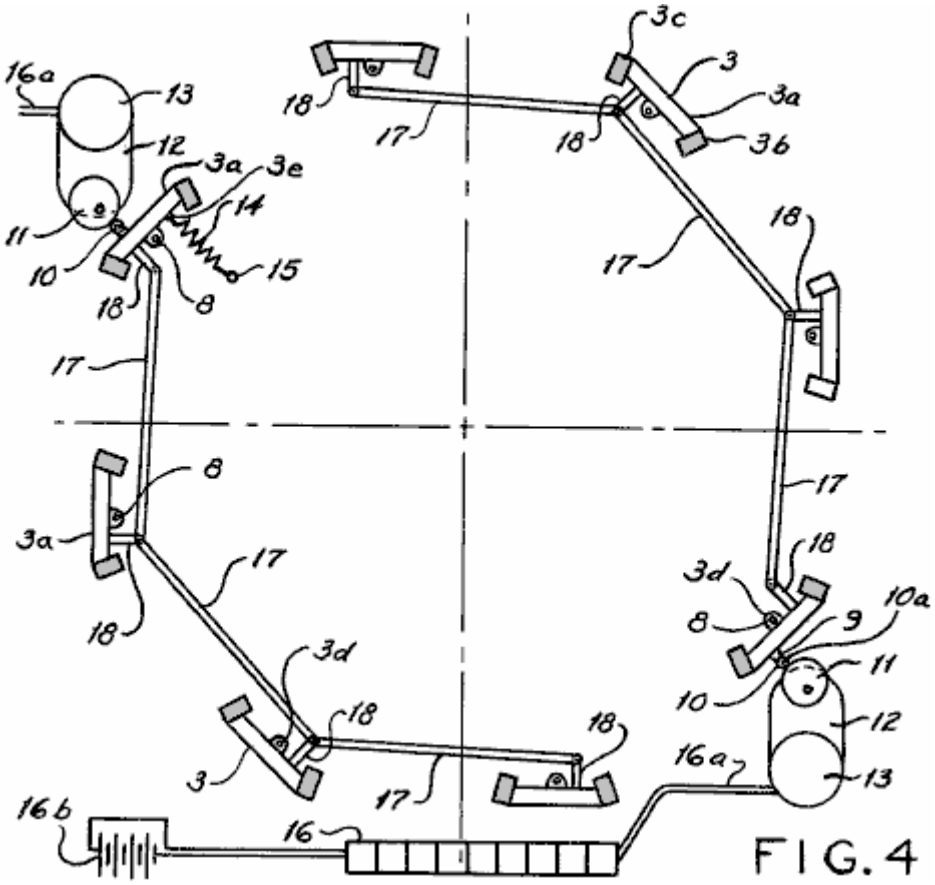

Fig.4 is a top, break-away view of several oscillating magnet pairs connected together with linkage.

DESCRIPTION OF THE PREFERRED EMBODIMENT

The invention **1**, is comprised of two basic components: a large driven disc **2**, and multiple oscillating magnet pairs **3**, which are closely interrelated and mounted on a common base plate **4**.

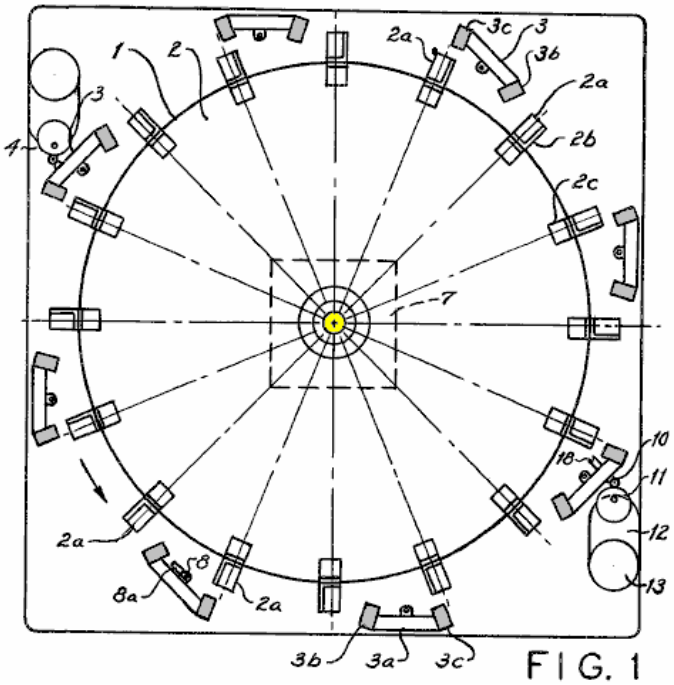

FIG. 1

Multiple, identical permanent magnets **2a**, are equally spaced around the periphery of the large driven disc **2**, by means of support angles **2b**, and angle brackets **2c**, which are secured to the disc **2**, with standard hardware.

A drive shaft **5**, is fastened to the disc **2**, by means of a hub **2d**, and supported by two ball bearings **6**. One of the ball bearings **6**, is fitted into a bore within the base plate **4**, while the other ball bearing **6**, is fitted into a box-base **7**, which is fastened to the base plate **4**, with standard hardware.

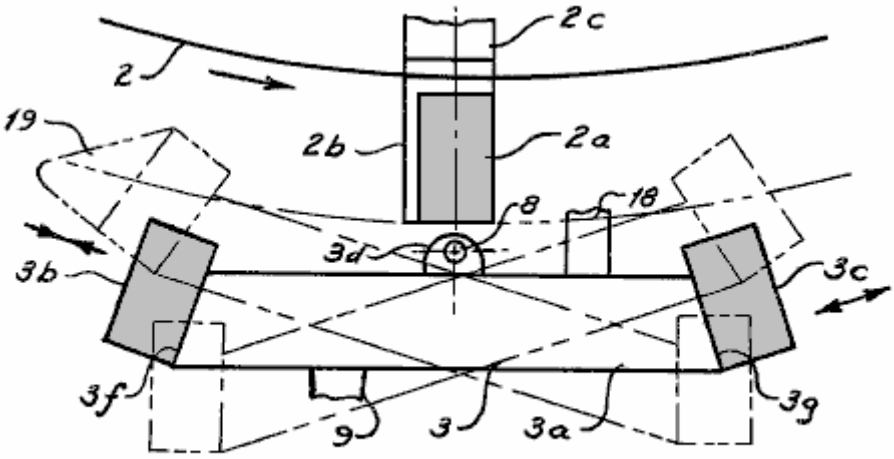

FIG. 3

The multiple oscillating magnet pairs **3**, are a flat, non-magnetic plate **3a**, with opposite pole magnet segments **3b** and **3c**, respectively, attached to the side of the flat oscillation plate **3a**. Two pivot brackets **3d**, are attached to the top and bottom of the flat plate **3a**, which pivot the oscillation plate **3a**, on the pivot rod **8**. One end of the pivot rod **8**, is fitted into the base plate **4**, and the opposite end is supported by an elongated Z-shaped bracket **8a**.

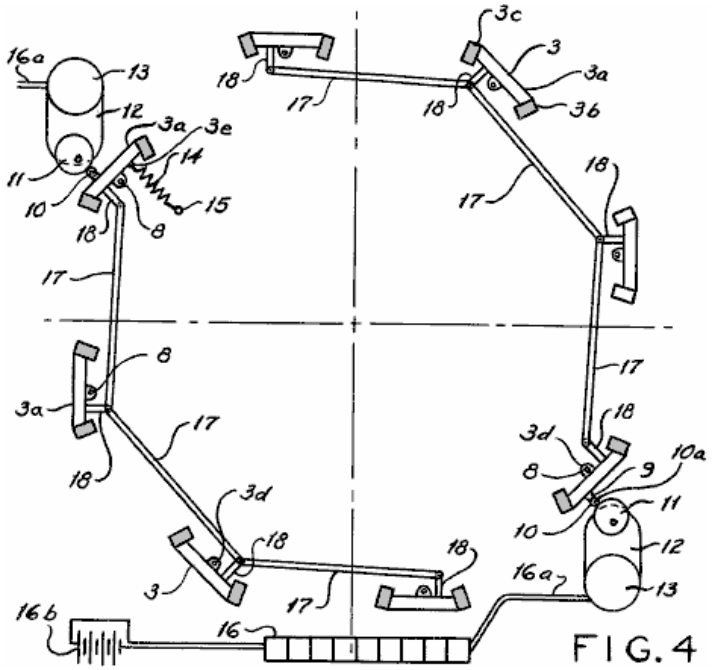

An arm **9**, is fastened to a flat face of the flat plate **3a**, which supports the pin **10a**, which carries the ball bearing **10**, as it rolls on the eccentric disc **11**. The off-centre disc **11**, is fastened to the slow speed shaft of the gear reduction unit **12**, which is driven by the small DC motor **13**. A return tension spring **14**, is connected to the oscillation plate **3a**, by eyelet **3e**. The opposite end of the return tension spring **14**, is retained by the post **15**, which is pressed into the base plate **4**. Motors **13**, are powered by multiple arrays of silicon photovoltaic solar cells **16**. Electrical leads **16a**, conduct solar converted electricity to the motors **13**, with any excess current stored in the batteries **16b**.

The motor driven oscillation stations become the master stations for this invention **1**, from which three to five slave oscillation stations are driven. The reciprocating motion is transmitted by straight links **17**, which are pinned to the link arms **18**, which in turn are secured to the flat plates **3a**.

All of the slave oscillation stations must be precisely adjusted to exactly the same angular position as the master driving oscillation station so that all stations are synchronised to allow proper functioning of the rotating disc **2**.

For very large discs **2**, with many disc magnets, several master oscillation stations, with a fixed number of slave oscillation stations will be required. All of the master oscillation driving-stations will have to be electrically synchronised to maintain overall synchronisation, with all of the eccentrics **11**, set at the same angle at start-up of the disc.

Either end of the drive shaft **5**, may be connected with a speed step-up belt drive arrangement, which is not shown here.

Plastic deflectors **19**, are added to either side of the oscillation plates **3a**, adjacent to the opposite magnets segments **3b**, and **3c**, their exact position depending on the direction of rotation of disc **2**. These act as an anti-jamming device for the magnets.

Magnetic field bias angles **3f** and **3g** (**Fig.3**), are required for the sides of plates **3a**, in order to assure an optimum "pull-push" sequence on the large drive disc **2**, as the magnetic oscillation pairs **3**, are actuated. The bias angle **3f**, is matched to the magnet segment **3b**, while bias angle **3g** is matched to magnet segment **3c**.

None of the load components which are external to the device, such as an electric generator or alternator, are shown as a part of this invention, since a variety of load devices and arrangements are possible for the magnetic disc drive.

Bob Neal's Compressed Air Engine

US Patent 2,030,759 **11th Feb. 1936** **Inventor: Bob Neal**

COMPRESSOR UNIT

This invention relates to the construction of a compressor, and more particularly to a combined fluid-operated engine and compressor.

The primary object of the invention, is the provision of a compressor of this character, wherein there is arranged an automatically counterbalanced crankshaft and fluid equalisers within a storage tank, which makes it possible for the engine to operate on constant reserve tank pressure, so as to actuate additional equipment, the pistons for the engine also being automatically balanced and suspended when the engine is operating.

Another object of the invention is the provision of an engine which is operated by air under pressure, the air being supplied by compressors which are in a bank with the engine construction.

A further object of this invention is the provision of an engine of this type of novel construction as the engine and the compressors are operated from the same crankshaft, which is of the automatically balanced type, so that high efficiency is attained.

A still further object of the invention is the provision of an engine of this character which is comparatively simple in construction, thoroughly reliable and efficient in its operation, strong, durable, and inexpensive to manufacture.

With these and other objects in view, the invention consists in the features of construction, combination and arrangement of parts as will be described more fully here, illustrated in the accompanying drawings which disclose the preferred embodiment of the invention, and pointed out in the appended Claim.

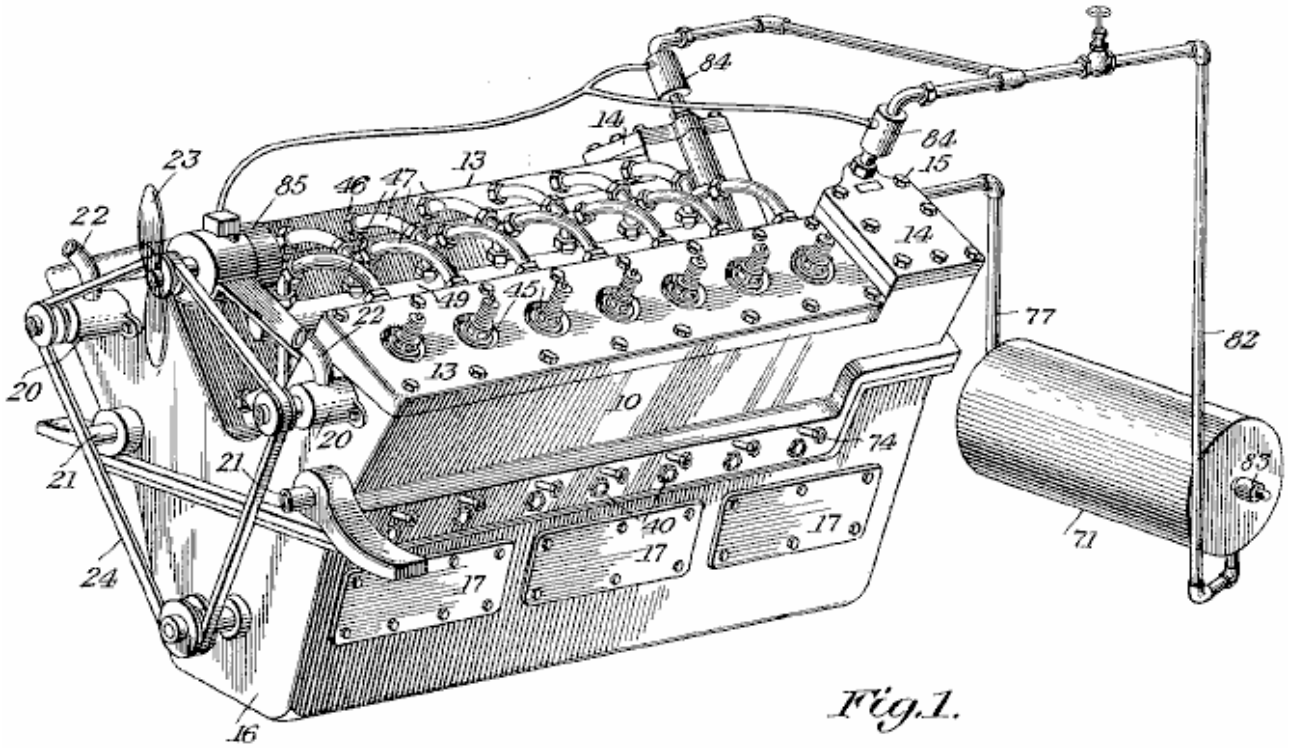

In the drawings, **Fig.1** is a perspective view of the engine constructed in accordance with the invention.

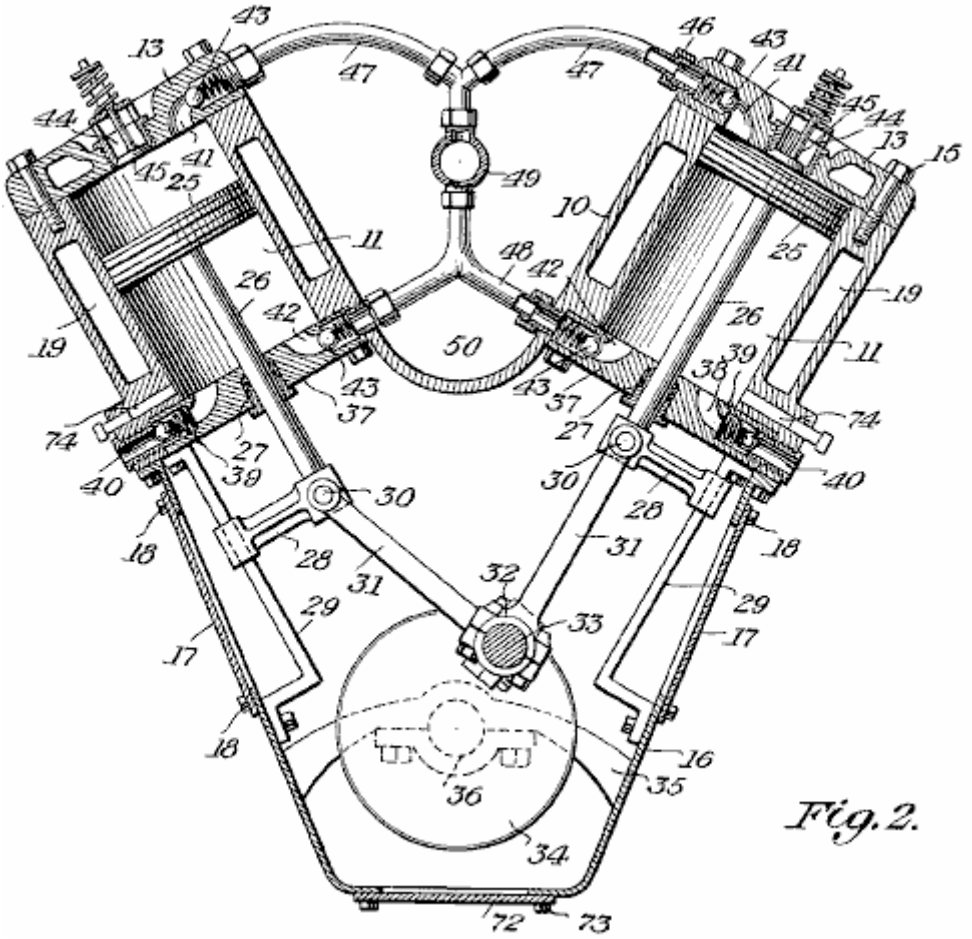

Fig.2 is a vertical transverse cross-section view through the compressor part of the engine.

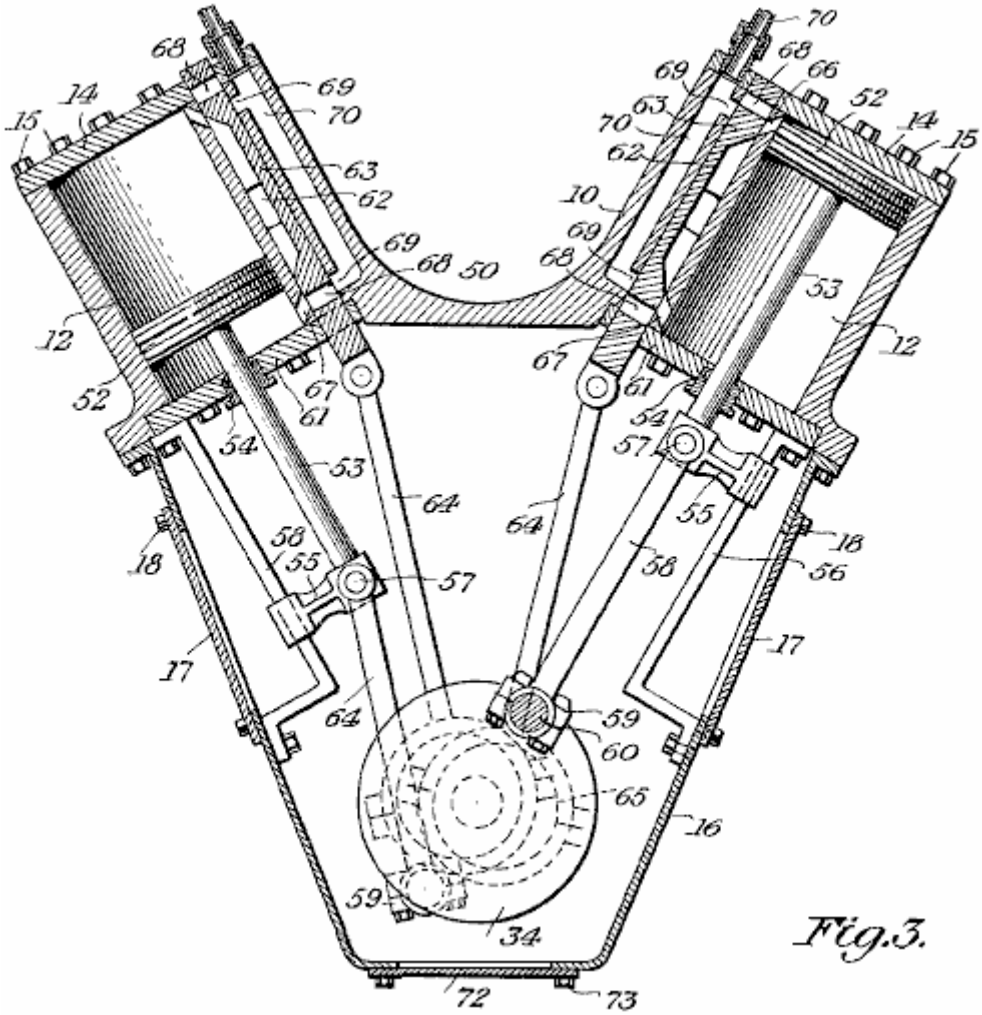

Fig.3 is a vertical cross-sectional view through the power part of the engine.

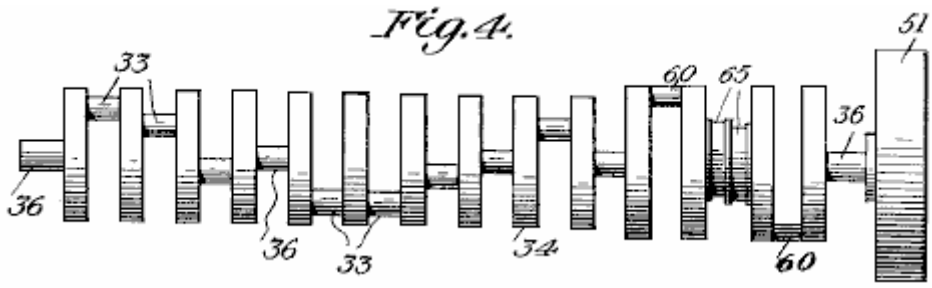

Fig.4 is a detail elevation of the crankshaft of the engine.

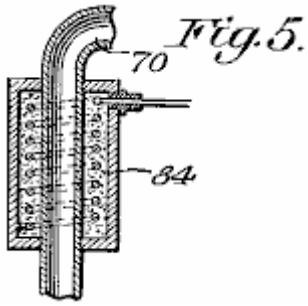

Fig.5 is an enlarged cross-sectional view through one of the electric heaters for the engine.

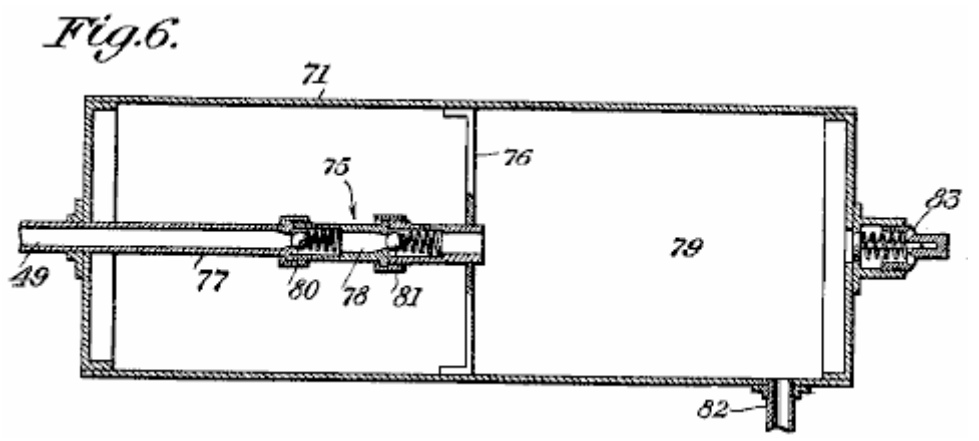

Fig.6 is a vertical, longitudinal, cross-sectional view through the air storage tank, including the equaliser.

The same reference numbers are used for each individual part in every view in every drawing.

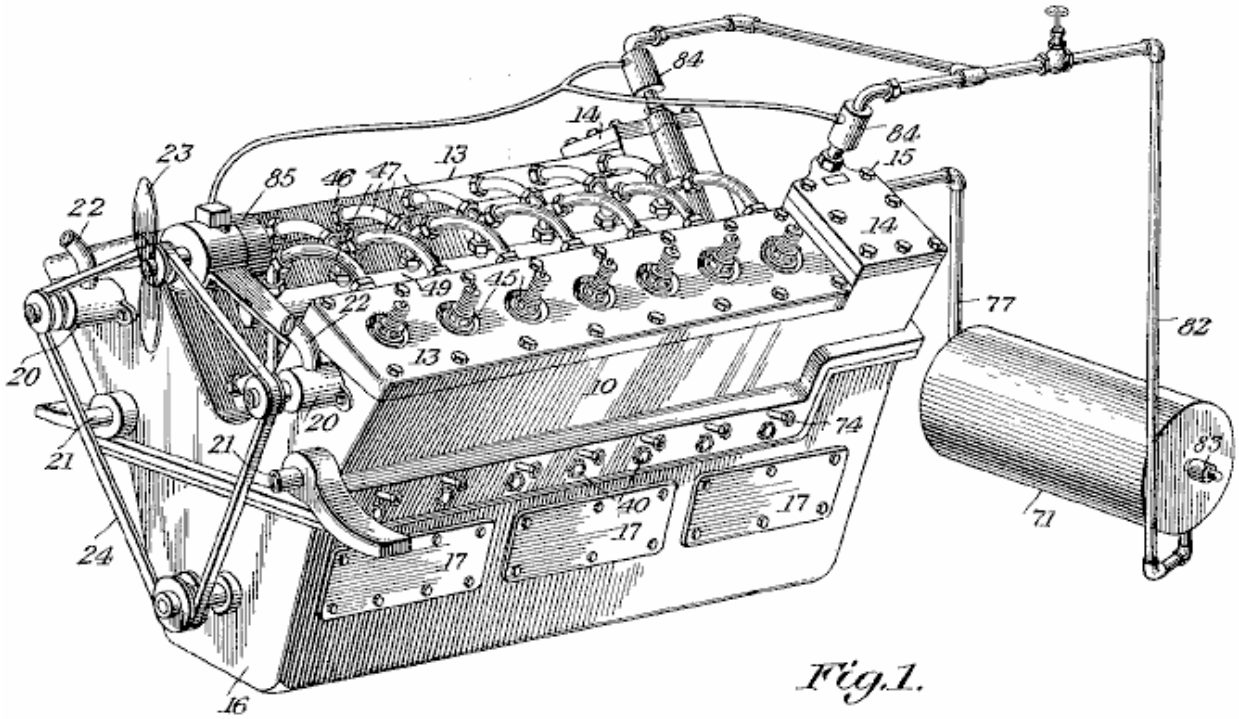

Referring to the drawings in detail, the engine in its entirety, composes a cylinder block **10** having inside it, the series of compressor cylinders **11** and the power cylinders **12**. The block **10** is of the V-type and the upper ends of the cylinders are closed off by the removable heads **13** and **14** which are held in place by conventional head bolts **15**. Beneath block **10** is the crank case **16**, which has detachable plates **17** at opposite sides, held in place by fasteners **18**, and seated so as to be leak proof. The block **10** is chambered to provide a water jacket **19** surrounding the cylinders, while at the forward end of the block are water pumps **20**, circulating water through the inlet pipe **21** which leads into the jacket and the water exits from the jacket through the outlet pipe **22**. Beside the pumps **20**, is a fan 23 which is operated from the same belt **24** which drives the pumps.

Working inside the cylinders **11**,are the reciprocating pistons **25**, their rods **26** sliding through packing glands **27** and fixed to crossheads **28** which slide on their mounting guides **29** which are secured to the walls of the crank case **16**. These crossheads **28** are fitted with wrist pins **30**, forming a pivoting connection with the connecting rods **31**, which are connected to their cranks **33** by their bearings **32**. The cranks **33** form part of a counter balanced crankshaft **34**, which is mounted in supports **35** attached to the crank case **16**, the shaft being provided with the required bearings **36**.

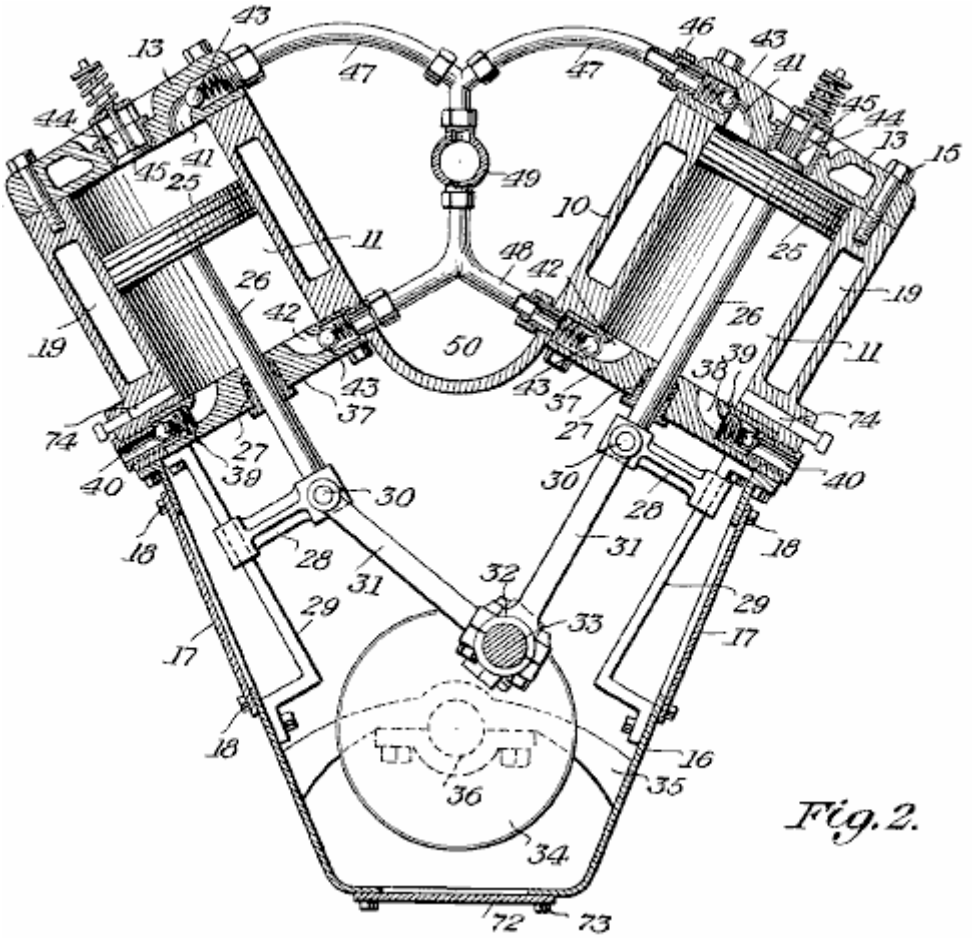

The inner ends of the cylinders **11** are fitted with inner end heads **37**, which are provided with air intake ports **38** fitted with spring ball inlet checks **39**, the air entering through passages **40** which open outside the block **10**. Glands **27** are mounted in the heads **37**.

The heads **13** and **37** are provided with the compressed air outlets **41** and **42**, which are fitted with spring ball checks **43**. The heads **13** are also provided with the central air inlets **44**, which are fitted with spring checks **45**. Couplings **46** attach the air outlets **41** and **42** to their outlet feed pipes **47** and **48**. These pipes lead to a main conduit **49** which is located in the centre channel **50** of the block **10**.

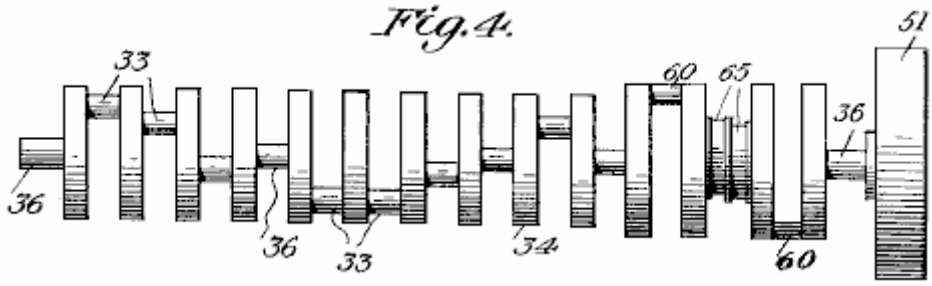

At the rear end of the block **10**, mounted on shaft **36**, there is a conventional flywheel **51**.

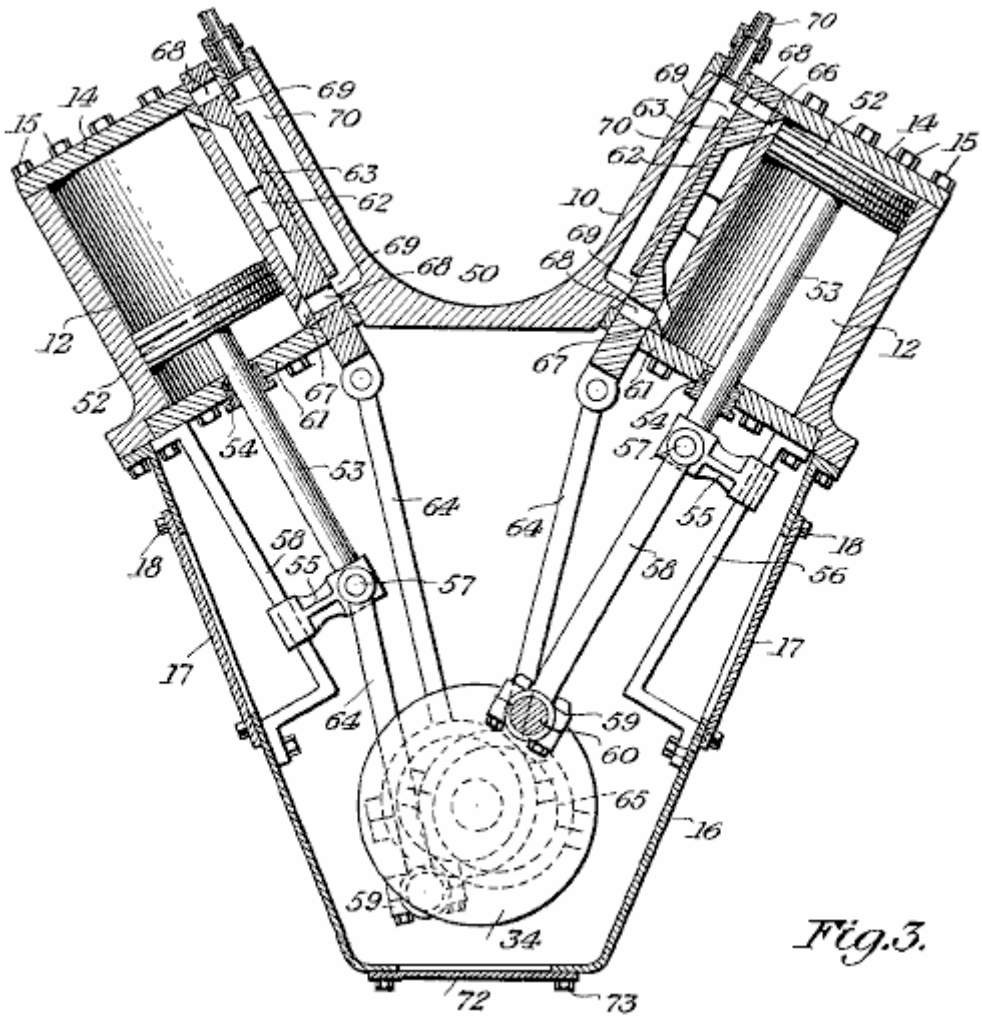

Working inside the cylinders **12** are the pistons **52**, with their piston rods **53** sliding through packing glands **54** and fixed in crossheads **55** which slide along their mounting guides **56**, mounted on the inner walls of the crank case **16**. The crossheads **55** have wrist pins **57** which provide a pivoting joint for the connecting rods **58** which are connected by their bearings **59** to their cranks **60** of the crank shaft **34**, the inner ends of the cylinders **12** being closed by the inner heads **61** and their associated glands **54**.

On the cylinders **12** are slide valve chests **62** in which are the slide valves **63**, these being operated by throw rods **64** actuated by cams **65** and the valves controlling the admission and exhaust of air into and out of the cylinders **12**, through the ports **66** and **67**, and these valves **63** are provided with ports **68** for the delivery of air under pressure from the inlet passages **69** common to a pipe **70** coming from a compressed air storage tank **71**.

The bottom of the crank case **16** is fitted with a removable plate **72** which is secured in place by fasteners **73**, and when this plate is removed, it provides access to the crank shaft **34** and the bearings for the engine, as well as other parts inside the crank case.

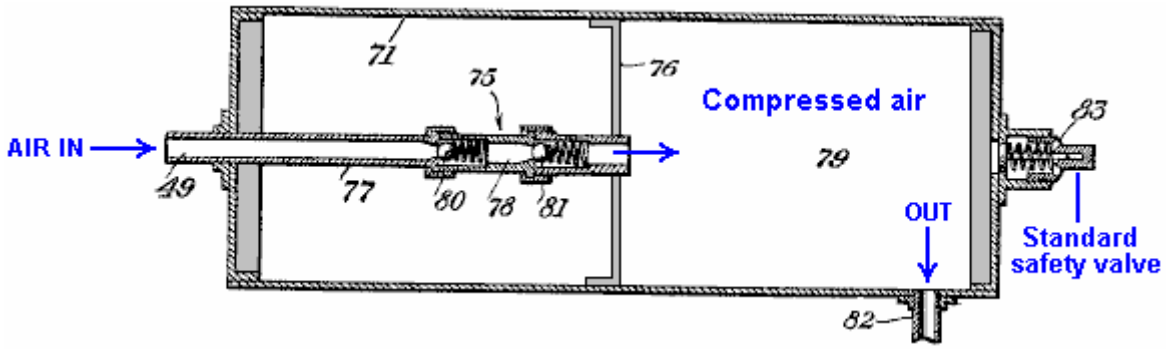

Leading into the cylinders **11** are the passages **74** of a lubricating system (not shown). The compressed air storage tank **71** has inside it a double-check discharge nozzle **75**, supported by member **76**. Leading to this equaliser is an air inlet pipe **77** which connects through its valved section **78** to the compressed air reservoir **79**.

In the equaliser **75**, are the spaced spring ball checks **80** and **81**, one being for the inlet side and the other for the outlet side of the equaliser. This pipe **77** is connected with the main conduit **49**, while a pipe **82** connects to pipe **70**. The tank is also fitted with an automatic relief valve **83** and this valve can be of any approved type.

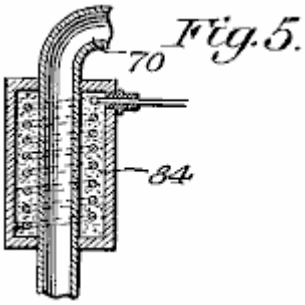

Placed around the pipes **70** which connect to the air passages **69** (**Fig.3**) are electric heating units **84** to heat the pressurised air to above freezing temperature when delivered from tank **71** to the cylinders **12**. Supported on the block **10** is an electric generator **85** which is driven from the shaft **34** (**Fig.2**) through a belt **24** (**Fig.1**) and this generator is included in an electric circuit which also has the heaters **84** so that these will operate from current supplied by the generator.

The compressed air storage tank **71** with the equaliser is constructed so that it is possible to pump air into it while it contains an air pressure of 200 pounds per square inch while the compressors are only pumping against 15 pounds per square inch of (atmospheric) pressure. An outside air pressure source can be coupled with the tank to augment that pressure derived from the cylinders **11** of the engine.

CLAIMS

What is claimed is:
In a structure of the kind described, a V-shaped cylinder block provided with upwardly divergent cylinders, end heads fitted to said cylinders at opposite ends thereof, each head having valved inlets and outlets, a main outlet lead between the cylinders of the block for a storage tank and having lateral branches to the outlets at the inner sides of said heads, one inlet being located at the centre of each head at the outer ends of said cylinders while the remaining inlets are at the outer sides of the heads at the inner ends of said cylinders, a substantially V-shaped crank case fitted to the block beneath the cylinders, a counterbalanced crank shaft journaled in the crank case, pistons operating in the cylinders and having rods extended into the crank case, crosshead guides fitted to the interior sides of said case, crossheads connecting the rods with the guides and sliding on them and connecting rods operated by the crank shaft and pivoted at the crossheads in order to allow reciprocation of the pistons.

Leroy K. Rogers' Compressed Air Engine

Patent US 4,292,804 6th October 1980 Inventor: Leroy K. Rogers

METHOD AND APPARATUS FOR OPERATING AN ENGINE ON COMPRESSED GAS

ABSTRACT

The present invention relates to a method and apparatus for operating an engine having a cylinder containing a reciprocating piston driven by a compressed gas. The apparatus comprises a source of compressed gas connected to a distributor which conveys the compressed gas to the cylinder. A valve is provided to admit compressed gas to the cylinder when the piston is in an approximately Top Dead Centre position.

In one embodiment of the present invention, the timing of the opening of the valve is advanced so that the compressed gas is admitted to the cylinder progressively further before the Top Dead Centre position of the piston as the speed of the engine increases.

In a further embodiment of the present invention, a valve actuator is provided which increases the length of time over which the valve remains open to admit compressed gas to the cylinder as the speed of the engine increases.

A still further embodiment of the present invention relates to an apparatus for adapting a conventional internal combustion engine for operation on compressed gas.

US Patent References:

3,881,399	May., 1975	Sagi et al.	91/187.
3,885,387	May., 1975	Simington	60/407.
4,018,050	Apr., 1977	Murphy	60/412.

DESCRIPTION

BACKGROUND AND SUMMARY OF THE PRESENT INVENTION

The present invention is a method and apparatus for operating an engine using a compressed gas as the motive fluid. More particularly, the present invention relates to a apparatus for adapting a pre-existing internal combustion engine for operation on a compressed gas.

Air pollution is one of the most serious problems facing the world today. One of the major contributors to air pollution is the ordinary internal combustion engine which is used in most motor vehicles today. Various devices, including many items required by legislation, have been proposed in an attempt to limit the pollutants which an internal combustion engine exhausts to the air. However, most of these devices have met with limited success and are often both prohibitively expensive and complex. A clean alternative to the internal combustion engine is needed to power vehicles and other machinery.

A compressed gas, preferably air, would provide an ideal motive fluid for an engine, since it would eliminate the usual pollutants exhausted from an internal combustion engine. An apparatus for converting an internal combustion engine for operation on compressed air is disclosed in U.S. Pat. No. 3,885,387 issued May 27, 1975 to Simington. The Simington patent discloses an apparatus including a source of compressed air and a rotating valve actuator which opens and closes a plurality of mechanical poppet valves. The valves deliver compressed air in timed sequence to the cylinders of an engine through adapters located in the spark plug holes. However, the output speed of an engine of this type is limited by the speed of the mechanical valves and the fact that the length of time over which each of the valves remains open cannot be varied as the speed of the engine increases.

Another apparatus for converting an internal combustion engine for operation on steam or compressed air is disclosed in U.S. Pat. No. 4,102,130 issued July 25, 1978 to Stricklin. The Stricklin patent discloses a device

which changes the valve timing of a conventional four stroke engine such that the intake and exhaust valves open once for every revolution of the engine instead of once every other revolution of the engine. A reversing valve is provided which delivers live steam or compressed air to the intake valves and is subsequently reversed to allow the exhaust valves to deliver the expanded steam or air to the atmosphere. A reversing valve of this type however does not provide a reliable apparatus for varying the amount of motive fluid injected into the cylinders when it is desired to increase the speed of the engine. Further, a device of the type disclosed in the Stricklin patent requires the use of multiple reversing valves if the cylinders in a multi-cylinder engine were to be fired sequentially.

Therefore, it is an object of the present invention to provide a reliable method and apparatus for operating an engine or converting an engine for operation with a compressed gas.

A further object of the present invention is to provide a method and apparatus which is effective to deliver a constantly increasing amount of compressed gas to an engine as the speed of the engine increases.

A still further object of the present invention is to provide a method and apparatus which will operate an engine using compressed gas at a speed sufficient to drive a conventional automobile at highway speeds.

It is still a further object of the present invention to provide a method and apparatus which is readily adaptable to a standard internal combustion engine, to convert the internal combustion engine for operation with a compressed gas.

Another object of the invention is to provide a method and apparatus which utilises cool expanded gas, exhausted from a compressed gas engine, to operate an air-conditioning unit and/or an oil-cooler.

These and other objects are realised by the method and apparatus of the present invention for operating an engine having at least one cylinder containing a reciprocating piston and using compressed gas as the motive fluid. The apparatus includes a source of compressed gas, a distributor connected it for conveying the compressed gas to the cylinder or cylinders. A valve is provided for admitting the compressed gas to the cylinder when the piston is in an approximately Top Dead Centre position within the cylinder. An exhaust is provided for exhausting the expanded gas from the cylinder as the piston returns to approximately the Top Dead Centre position.

In a preferred embodiment of the present invention, a device is provided for varying the duration of each engine cycle over which the valve remains open to admit compressed gas to the cylinder, dependent upon the speed of the engine. In a further preferred embodiment of the present invention, an apparatus for advancing the timing of the opening of the valve is arranged to admit the compressed gas to the cylinder progressively further and further before the Top Dead Centre position of the piston, as the speed of the engine increases.

Further features of the present invention include a valve for controlling the amount of compressed gas admitted to the distributor. Also, a portion of the gas which has been expanded in the cylinder and exhausted through the exhaust valve, is delivered to a compressor to be compressed again and returned to the source of compressed gas. A gear train can be engaged to drive the compressor selectively at different operating speeds, depending upon the pressure maintained at the source of compressed air and/or the speed of the engine. Still further, a second portion of the exhaust gas is used to cool a lubricating fluid for the engine or to operate an air-conditioning unit.

In a preferred embodiment of the present invention, the valve for admitting compressed gas to the cylinder is operated electrically. The device for varying the duration of each engine cycle, over which the intake valve remains open, as the speed of the engine increases, comprises a rotating element whose effective length increases as the speed of the engine increases, causing a first contact on the rotating element to be electrically connected to a second contact on the rotating element, for a longer period of each engine cycle. The second contact operates the valve causing it to remain in an open position for a longer period of each engine cycle, as the speed of the engine increases.

Still further features of the present invention include an adaptor plate for supporting the distributor above the intake manifold of a conventional internal combustion engine after a carburettor has been removed to allow air to enter the cylinders of the engine through the intake manifold and conventional intake valves. Another adaptor plate is arranged over an exhaust passageway of the internal combustion engine to reduce the cross-sectional area of the exhaust passageway.

BRIEF DESCRIPTION OF THE DRAWINGS

Preferred embodiments of a method and apparatus for operating an engine according to the present invention will be described with reference to the accompanying drawings in which components have the same reference numbers in each drawing.

Fig.1 is a schematic representation of an apparatus according to the present invention arranged on an engine:

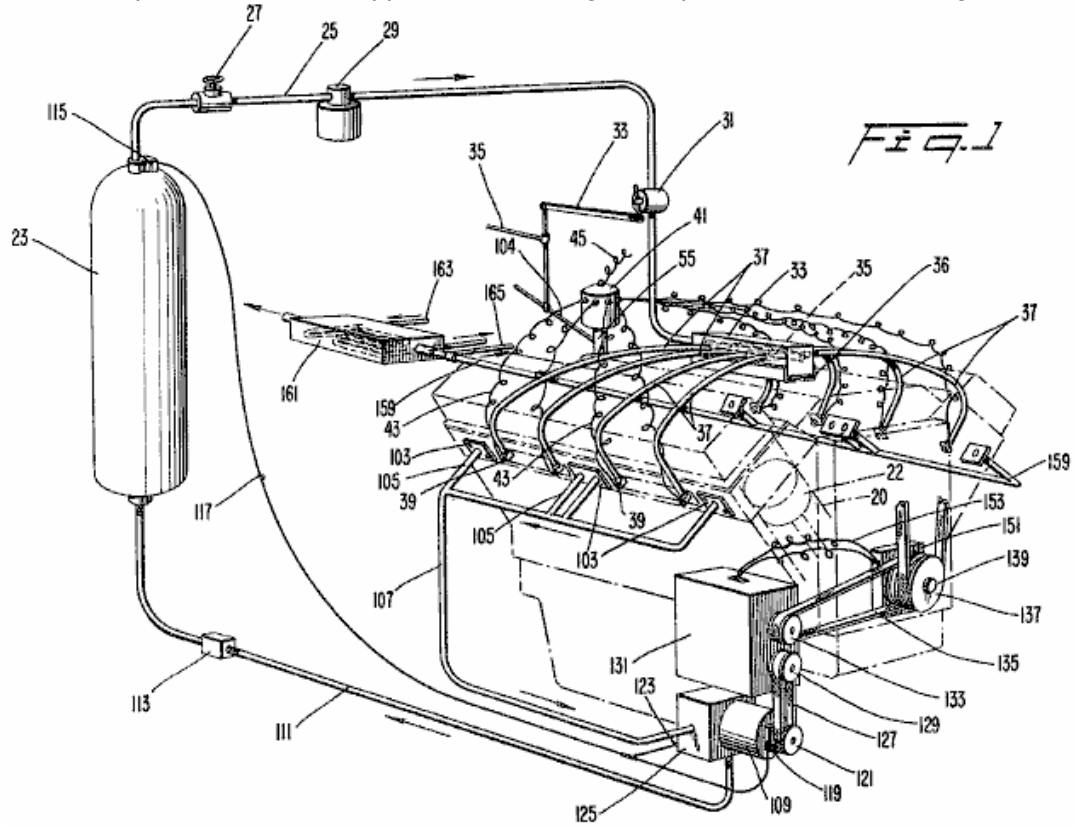

Fig.2 is a side view of one embodiment of a valve actuator according to the present invention.

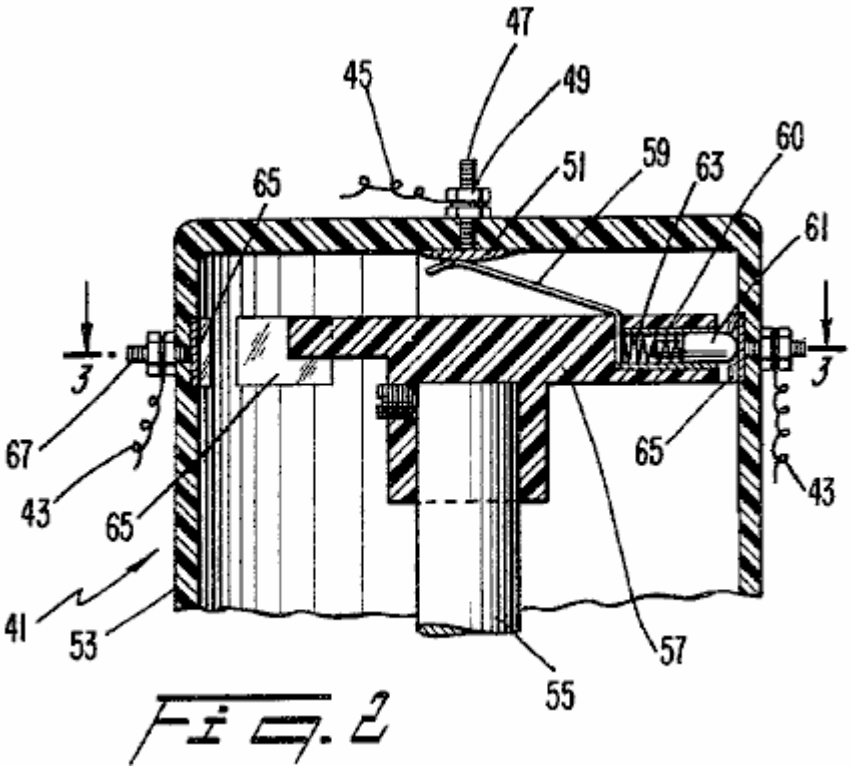

Fig.3 is a cross-sectional view taken along the line **3--3** in **Fig.2**.

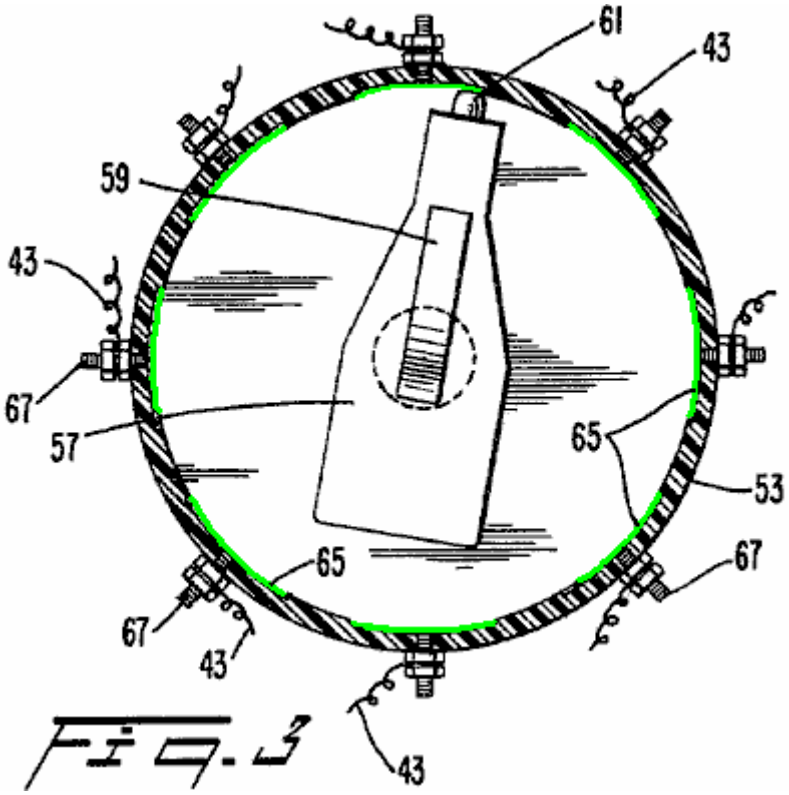

Fig. 3

Fig.4 is a cross-sectional view of a second embodiment of a valve actuator according to the present invention.

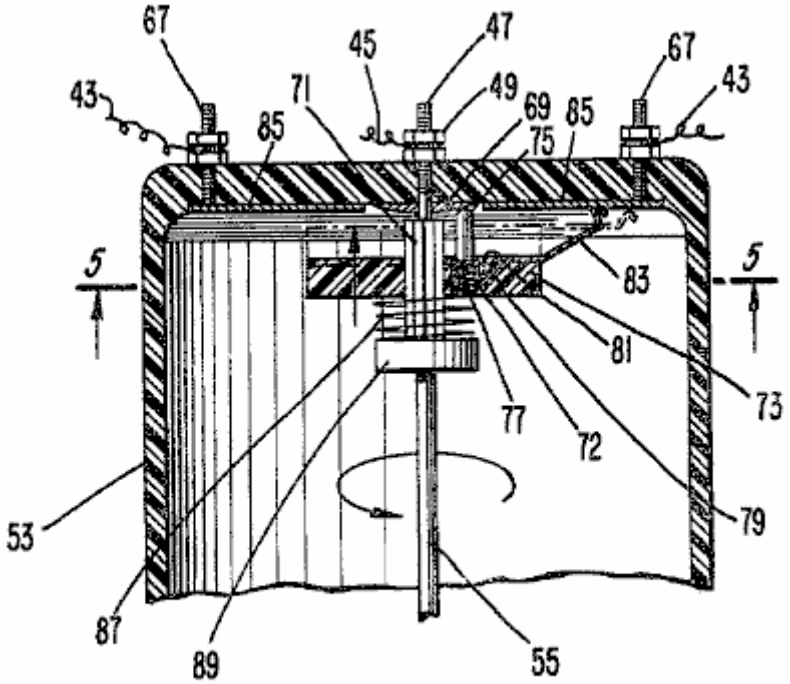

Fig. 4

Fig.5 is a view taken along the line **5--5** in **Fig.4**.

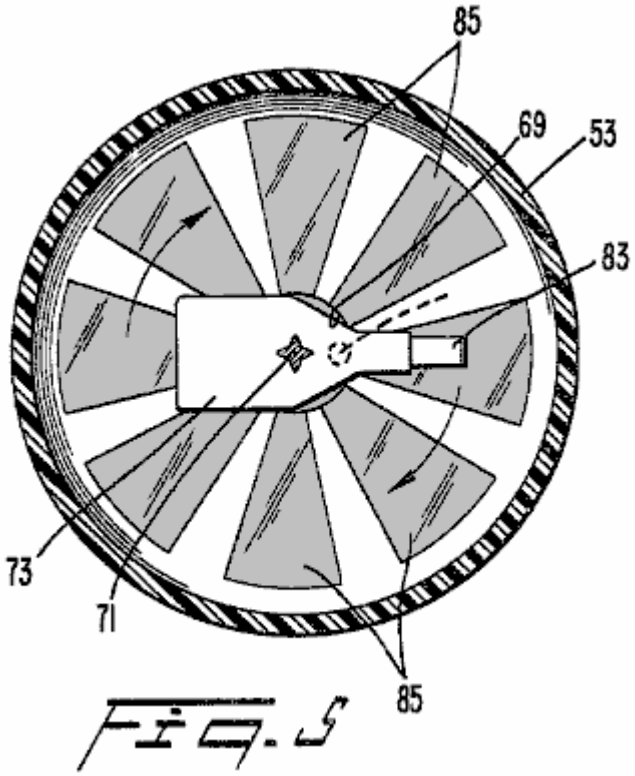

Fig.6 is a cross-sectional view of a third embodiment of a valve actuator according to the present invention;

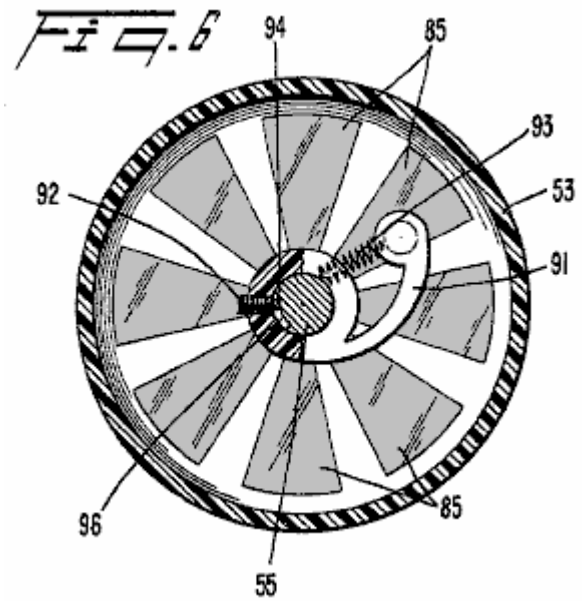

Fig.7 is a view taken along the line **7--7** in **Fig.6**.

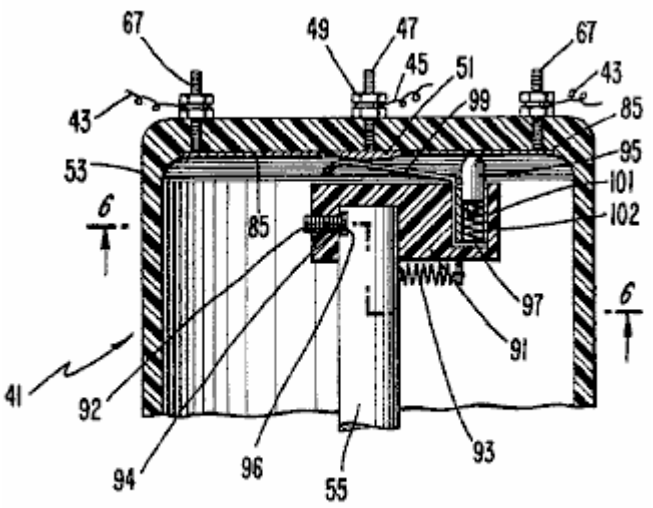
67
49
47
67
45
51
43
43
99
85
95
53
101
6
85
102
97
6
91
41
92
94
96
55
93

Fig. 7

Fig.8 is a cross-sectional view of a gearing unit to drive a compressor according to the present invention.

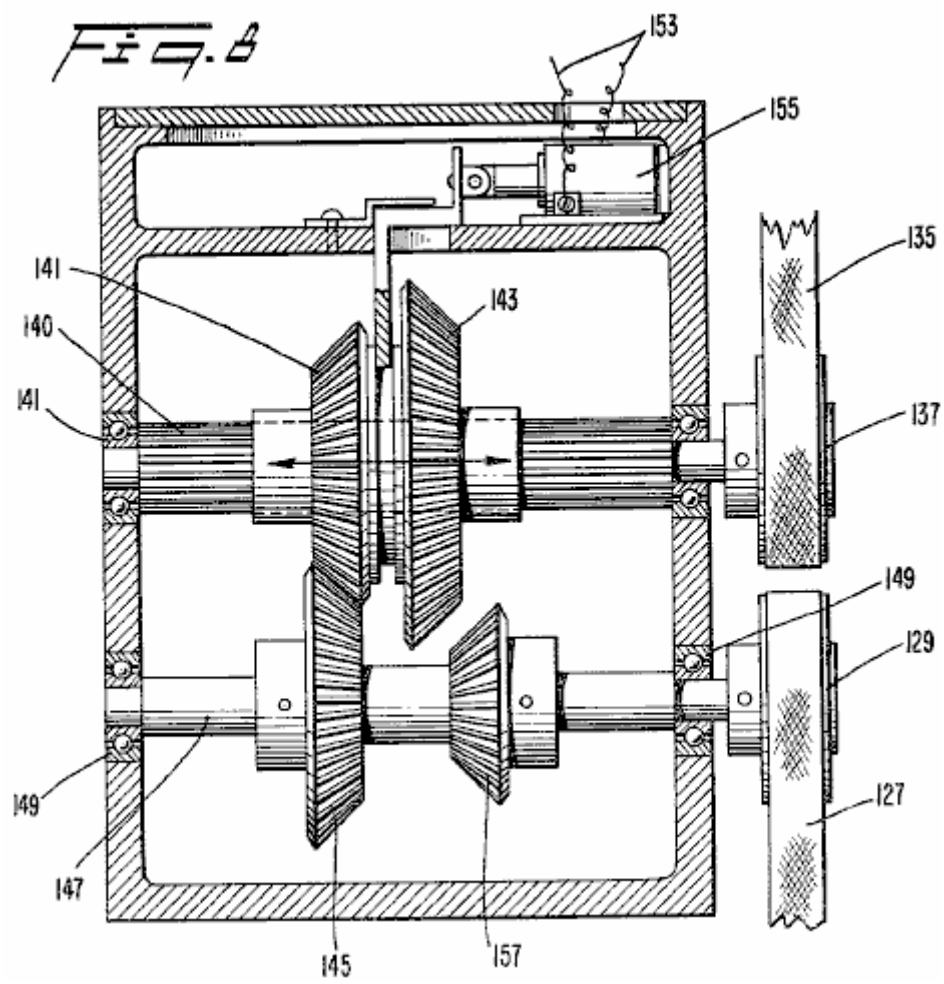

DETAILED DESCRIPTION OF THE PREFERRED EMBODIMENTS

With reference to **Fig.1**, an engine block **21** (shown in phantom) having two banks of cylinders with each bank including cylinders **20** having pistons **22** which reciprocate in them in a conventional manner (only one of which is shown in phantom). While the illustrated engine is a V-8 engine, it will be apparent that the present invention is applicable to an engine having any number of pistons and cylinders with the V-8 engine being utilised for illustration purposes only. A compressed gas tank **23** is provided to store a compressed gas at high pressure. It may also be desirable to include a small electric or gas compressor to provide compressed gas to supplement the compressed gas held in the tank **23**. In a preferred embodiment, the compressed gas is air which can be obtained from any suitable source.

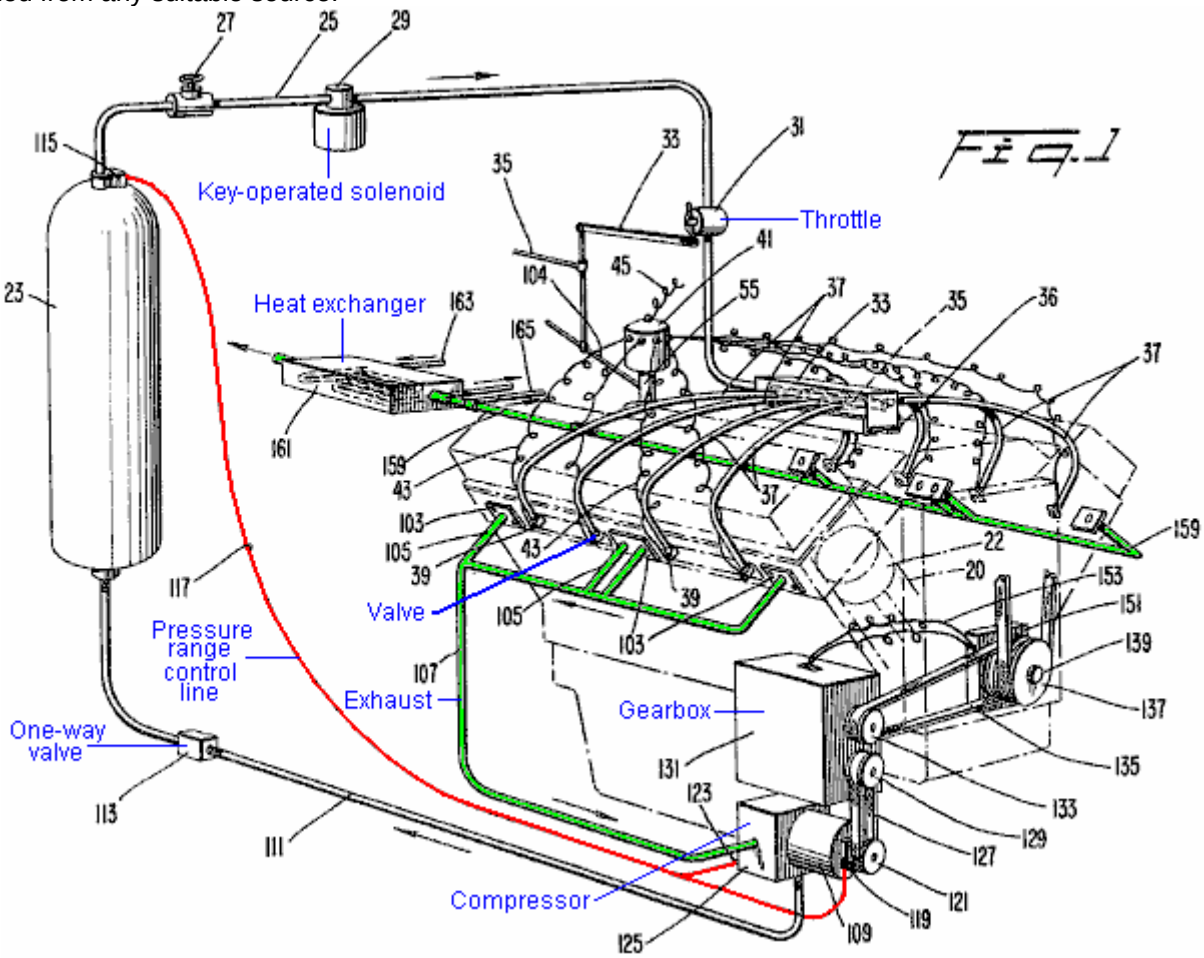

A line **25** transports the gas withdrawn from the tank **23** when a conventional shut-off valve **27** is open. In addition, a solenoid valve **29** preferably operated by a suitable key-operated engine switch (not shown) is also placed in the line **25**. In normal operation, the valve **27** is maintained open at all times with the solenoid valve **29** operating as a selective shut off valve to start and stop the engine **21**.

A suitable regulating valve **31** is arranged downstream of the solenoid valve **29** and is connected by a linkage **33** to a throttle linkage **35** which is operator-actuated by any suitable apparatus such as a foot pedal (not shown). The line **25** enters an end of a distributor **33** and is connected to an end of a pipe **35** which is closed at the other end. A plurality of holes, which are equal to the number of cylinders in the engine **21**, are provided on either side of the pipe **35** along the length of the pipe **35**.

When the present invention is used to adapt a conventional internal combustion engine for operation on compressed gas, an adaptor plate **36** is provided to support the distributor **33** in spaced relation from the usual intake opening in the intake manifold of the engine after a conventional carburettor has been removed. In this way, air is permitted to enter the internal combustion engine through the usual passageways and to be admitted to the cylinders through suitable intake valves (not shown). The adaptor plate **36** is attached to the engine block **21** and the distributor **33** by any suitable apparatus, e.g., bolts.

Each of the holes in the pipe **35** is connected in fluid-tight manner to a single line **37**. Each line **37** carries the compressed gas to a single cylinder **20**. In a preferred embodiment, each of the lines **37** is 1/2 inch high pressure plastic tubing attached through suitable connectors to the distributor **33** and the pipe **35**. Each of the lines **37** is connected to a valve **39** which is secured in an opening provided near the top of each of the cylinders **20**. In the case of a conversion of a standard internal combustion engine, the valves **39** can be conveniently screwed into a

tapped hole in the cylinder **20** typically provided for a spark plug of the internal combustion engine. In a preferred embodiment, the valves **39** are solenoid actuated valves in order to provide a fast and reliable opening and closing of the valves **39**.

Each of the valves **39** is energised by a valve actuator **41** through one of a plurality of wires **43**. The valve actuator **41** is driven by a shaft of the engine similar to the drive for a conventional distributor of an internal combustion engine. That is, a shaft **55** of the valve actuator **41** is driven in synchronism with the engine **21** at one half the speed of the engine **21**.

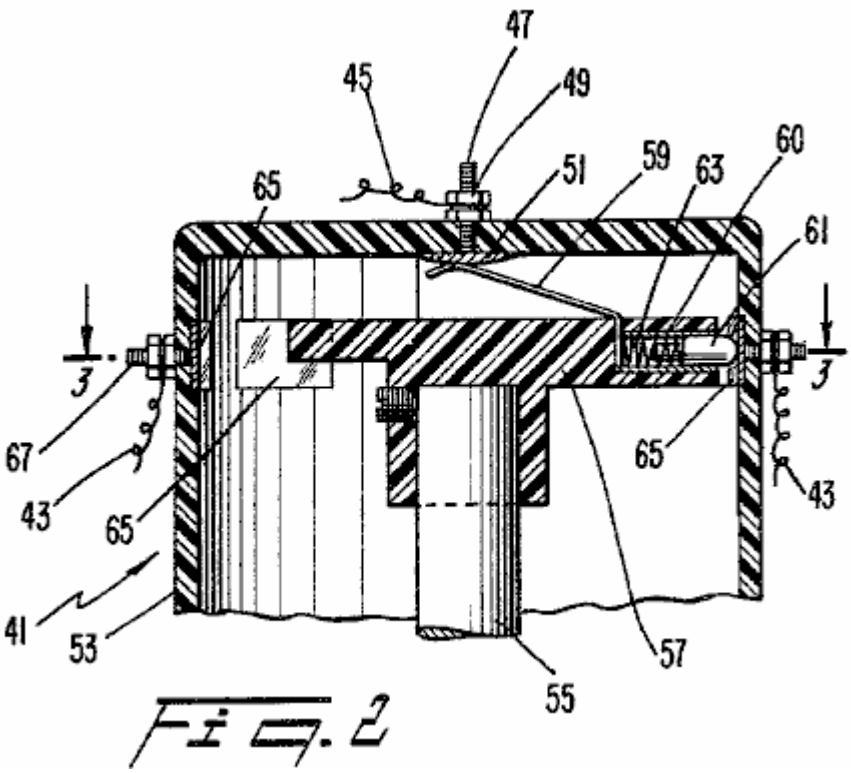

Fig. 2

A first embodiment of the valve actuator **41** (**Fig.2** and **Fig.3**), receives electrical power through a wire **45** which is energised in a suitable manner by a battery, and a coil if necessary (not shown) as is conventional in an internal combustion engine. The wire **45** is attached to a central post **47** by a nut **49**. The post **47** is connected to a conducting plate **51** arranged in a housing **53** for the valve actuator **41**. Within the housing **53**, the shaft **55** has an insulating element **57** secured to an end of the shaft **55** and rotates with it when the shaft **55** is driven by the engine **21**. A first end of a flexible contact **59** is continuously biased against the conducting plate **51** to receive electricity from the battery or other suitable source. The other end of the contact **59** is connected to a conducting sleeve **60** which is in constant contact with a spring biased contact **61** which is arranged within the sleeve **60**. The contact **61** is pressed by a spring **63** which pushes contact **61** towards a side wall of the housing **53**.

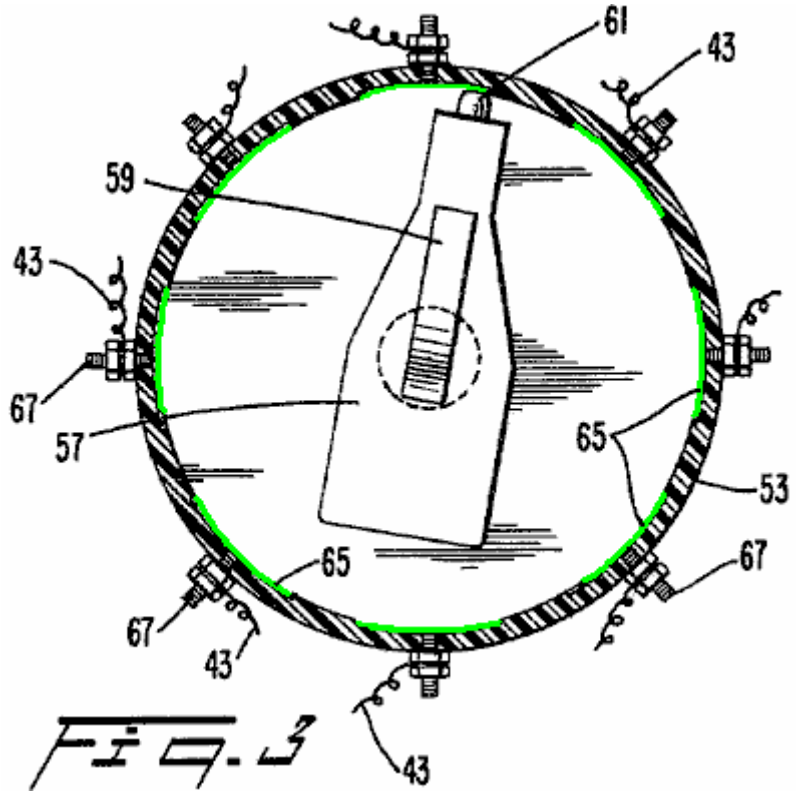

Fig. 3

With reference to **Fig.3**, a plurality of contacts **65** are spaced from one another and are arranged around the periphery of the housing **53** at the same level as the spring biased contact **61**. Each contact **65** is electrically connected to a post **67** which extends outside of the housing **53**. The number of contacts **65** is equal to the number of cylinders in the engine **21**. One of the wires **43**, which actuate the valves **39**, is secured to each of the posts **67**.

In operation, as the shaft **55** rotates in synchronism with the engine **21**, the insulating element **57** rotates and electricity is ultimately delivered to successive pairs of the contacts **65** and wires **43** through the spring loaded contact **61** and the flexible contact **59**. In this way, each of the electrical valves **39** is activated and opened in the proper timed sequence to admit compressed gas to each of the cylinders **20** to drive the pistons **22** on a downward stroke.

The embodiment illustrated in **Fig.2** and **Fig.3** is effective in causing each of the valves **39** to remain open for a long enough period of time to admit sufficient compressed gas to each of the cylinders **20** of the engine **21** to drive the engine **21**. The length of each of the contacts **65** around the periphery of the housing **53** is sufficient to permit the speed of the engine to be increased when desired by the operator by moving the throttle linkage **35** which actuates the linkage **33** to further open the regulating valve **31** to admit more compressed gas from the tank **23** to the distributor **33**. However, it has been found that the amount of air admitted by the valves **39** when using the first embodiment of the valve actuator **41** (**Fig.2** and **Fig.3**) is substantially more than required to operate the engine **21** at an idling speed. Therefore, it may be desirable to provide a valve actuator **41** which is capable of varying the duration of each engine cycle over which the solenoid valves **39** are actuated, i.e., remain open to admit compressed gas, as the speed of the engine **21** is varied.

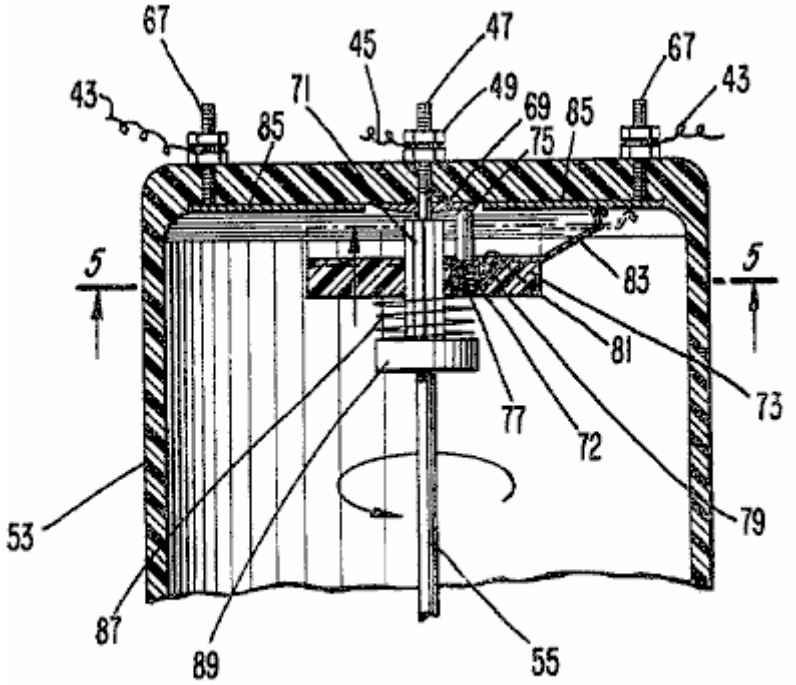

Fig. 4

A second embodiment of a valve actuator **41** which is capable of varying the duration of each engine cycle over which each of the valves **39** remains open to admit compressed gas to the cylinders **20** dependent upon the speed of the engine **21** will be described with reference to **Fig.4** and **Fig.5** wherein members corresponding to those of **Fig.2** and **Fig.3** bear like reference numbers. The wire **45** from the electricity source is attached to the post **47** by the nut **49**. The post **47** has a annular contact ring **69** electrically connected to an end of the post **47** and arranged within the housing **53**. The shaft **55** rotates at one half the speed of the engine as in the embodiment of **Fig.2** and **Fig.3**.

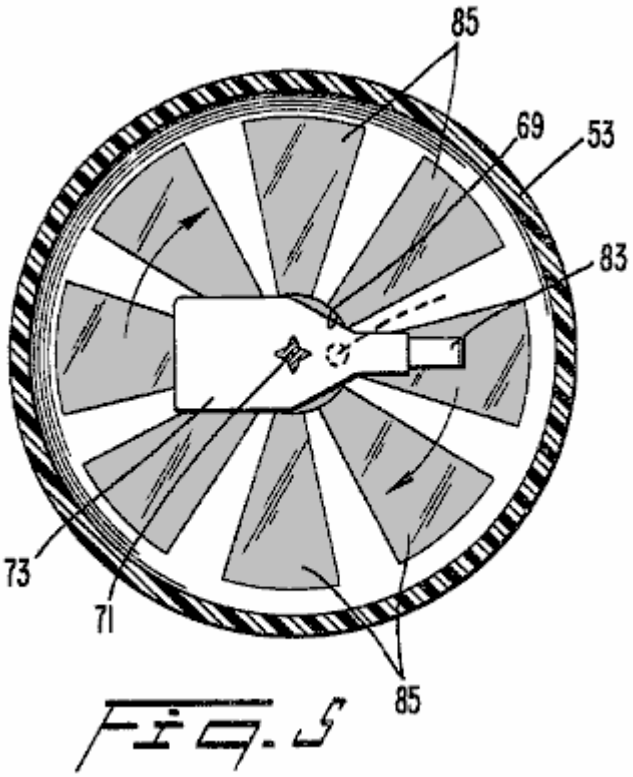

Fig. 5

At an upper end of the shaft **55**, a splined section **71** receives a sliding insulating member **73**. The splined section **71** of the shaft **55** holds the insulating member **73** securely as it rotates with shaft **55** but permits the insulating member **73** to slide axially along the length of the splined section **71**. Near the shaft **55**, a conductive sleeve **72** is arranged in a bore **81** in an upper surface of the insulating element **73** generally parallel to the splined section **71**.

A contact **75**, biased towards the annular contact ring **69** by a spring **77**, is arranged within the conductive sleeve **72** and in contact with it. The conductive sleeve **72** also contacts a conductor **79** at a base of the bore **81**.

The conductor **79** extends to the upper surface of the insulating element **73** near an outer periphery of the insulating element **73** where the conductor **79** is electrically connected to a flexible contact **83**. The flexible contact **83** connects, one after the other, with a series of radial contacts **85** which are positioned on an upper inside surface of the housing **53**. A weak spring **87** arranged around the splined section **71** engages a stop member **89** secured on the shaft **55** and the insulating element **73** to slightly bias the insulating element **73** towards the upper inside surface of the housing **53** to ensure contact between the flexible contact **83** and the upper inside surface of the housing **53**. As best seen in **Fig.5**, the radial contacts **85** on the upper inside surface of the housing **53** are arranged generally in the form of radial spokes extending from the centre of the housing **53** with the number of contacts being equal to the number of cylinders **20** in the engine **21**. The number of degrees covered by each of the radial contacts **85** gradually increases as the distance from the centre of the upper inside surface of the housing **53** increases.

In operation of the device of **Fig.4** and **Fig.5**, as the shaft **55** rotates, electricity flows along a path through the wire **45** down through post **47** to the annular contact member **69** which is in constant contact with the spring biased contact **75**. The electrical current passes through the conductive sleeve **72** to the conductor **79** and then to the flexible contact **83**. As the flexible contact **83** rotates along with the insulating member **73** and the shaft **55**, the tip of the flexible contact **83** successively engages each of the radial contacts **85** on the upper inside of the housing **53**. As the speed of the shaft **55** increases, the insulating member **73** and the flexible contact **83** attached to it, move upwards along the splined section **71** of the shaft **55** due to the radial component of the splines in the direction of rotation under the influence of centrifugal force. As the insulating member **73** moves upwards, the flexible contact **83** is bent so that the tip of the contact **83** extends further outwards radially from the centre of the housing **53** (as seen in phantom lines in **Fig.4**). In other words, the effective length of the flexible contact **83** increases as the speed of the engine **21** increases.

As the flexible contact **83** is bent and the tip of the contact **83** moves outwards, the tip remains in contact with each of the radial contacts **85** for a longer period of each engine cycle due to the increased angular width of the radial contacts with increasing distance from the centre of the housing **53**. In this way, the length of time over which each of the valves **39** remains open is increased as the speed of the engine is increased. Thus, a larger quantity of compressed gas or air is injected into the cylinders as the speed increases. Conversely, as the speed decreases and the insulating member **73** moves downwards along the splined section **71**, a minimum quantity of air is injected into the cylinder due to the shorter length of the individual radial contact **85** which is in contact with the flexible contact **83**. In this way, the amount of compressed gas that is used during idling of the engine **21** is at a minimum whereas the amount of compressed gas which is required to increase the speed of the engine **21** to a level suitable to drive a vehicle on a highway is readily available.

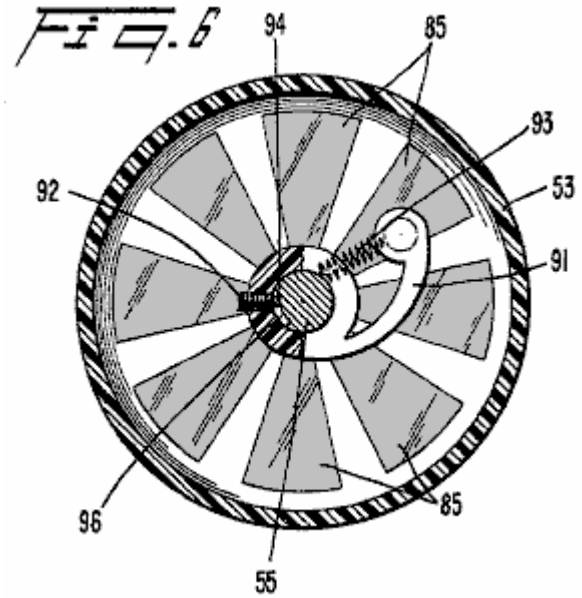

Shown in **Fig.6** and **Fig.7**, is a third embodiment of a valve actuator **41** according to the present invention. This embodiment includes a curved insulating element **91** having it's first end able to pivot, being secured by any suitable device such as screw **92** to the shaft **55** for co-rotation with the shaft **55**. The screw **92** is screwed into a tapped hole in the insulating element **91** so that a tab **94** at an end of the screw **92** engages a groove **96** provided in the shaft **55**. In this way, the insulating element **91** rotates positively with the shaft **55**. However, as the shaft **55**

rotates faster, the other end **98** of the insulating element **91** is permitted to pivot outwards under the influence of centrifugal force because of the groove **96** provided in the shaft **55**. A spring **93**, connected between the second end **98** of the element **91** and the shaft **55** urges the second end of the element **91** towards the centre of the housing **53**.

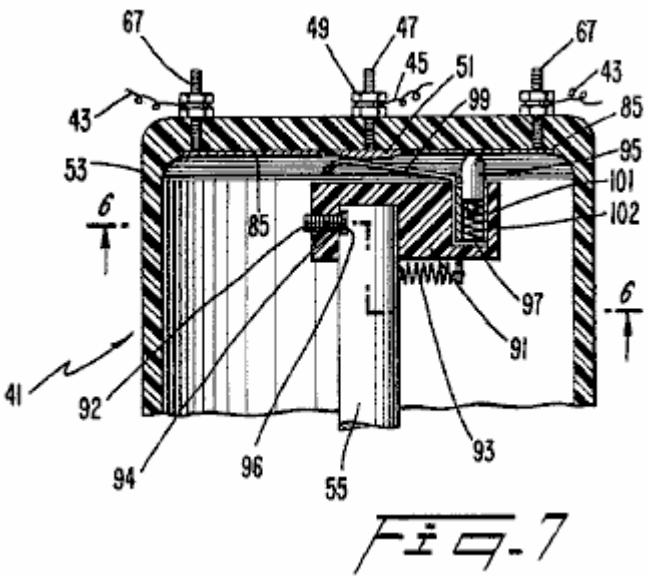

Fig.7

A contact **99** similar to the contact **59** (Fig.2) is arranged so that one end of the contact piece **99** is in constant contact with the conducting plate **51** located centrally within the housing **53**. The other end of the contact **99** engages a conductive sleeve **101** arranged in bore **102**. A contact element **95** is arranged in the conductive sleeve **101** in constant contact with the sleeve **101**. The bore **102** is arranged generally parallel to the shaft **55** near the second end of the curved insulating element **91**. The contact **95** is biased by a spring **97** towards the upper inside surface of the housing **53** for selective contact with each of the plurality of radial contacts **85** which increase in arc length towards the outer peripheral surface of the housing **53** (**Fig.6**).

When the device shown in **Fig.6** and **Fig.7** is operating, as the shaft **55** rotates the curved insulating element **91** rotates with the shaft **55** and the second end **98** of the insulating element **91** tends to pivot about the shaft **55** due to centrifugal force. Thus, as the effective length of the contact **95** increases, i.e., as the curved insulating element **91** pivots further outwards, the number of degrees of rotation over which the contact **95** is in contact with each of the radial contacts **85** on the upper inside surface of the housing **53** increases thereby allowing each of the valves **39** to remain open for a longer period of each engine cycle, which in turn, allows more compressed gas enter the respective cylinder **20** to further increase the speed of the engine **21**.

With reference to **Fig.1**, a mechanical advance linkage **104** which is connected to the throttle linkage **35**, advances the initiation of the opening of each valve **39** such that compressed gas is injected into the respective cylinder further before the piston **22** in the respective cylinder **20** reaches a Top Dead Centre position as the speed of the engine is increased by moving the throttle linkage **35**. The advance linkage **104** is similar to a conventional standard mechanical advance employed on an internal combustion engine. In other words, the linkage **104** varies the relationship between the angular positions of a point on the shaft **55** and a point on the housing **53** containing the contacts. Alternatively, a conventional vacuum advance could also be employed. By advancing the timing of the opening of the valves **39**, the speed of the engine can more easily be increased.

The operation of the engine cycle according to the present invention will now be described. The compressed gas injected into each cylinder of the engine **21** drives the respective piston **22** downwards to rotate a conventional crankshaft (not shown). The movement of the piston downwards causes the compressed gas to expand rapidly and cool. As the piston **22** begins to move upwards in the cylinder **20** a suitable exhaust valve (not shown), arranged to close an exhaust passageway, is opened by any suitable apparatus. The expanded gas is then expelled through the exhaust passageway. As the piston **22** begins to move downwards again, a suitable intake valve opens to admit ambient air to the cylinder. The intake valve closes and the ambient air is compressed on the subsequent upward movement of the piston until the piston reaches approximately the Top Dead Centre position at which time the compressed gas is again injected into the cylinder **20** to drive the piston **22** downwards and the cycle begins again.

In the case of adapting a conventional internal combustion engine for operation on compressed gas, a plurality of plates **103** are arranged, preferably over an end of the exhaust passageways, in order to reduce the outlet size of the exhaust passageways of the conventional internal combustion engine. In the illustrated embodiment, a single

plate having an opening in the centre is bolted to the outside exhaust passageway on each bank of the V-8 engine, while another single plate having two openings in it, is arranged with one opening over each of the interior exhaust passageways on each bank of the V-8 engine. A line **105** is suitably attached to each of the adaptor plates to carry the exhaust to an appropriate location. In a preferred embodiment, the exhaust lines **105** are made from 1.5" plastic tubing.

In a preferred embodiment, the exhaust lines **105** of one bank of the V-8 engine are collected in a line **107** and fed to an inlet of a compressor **109**. The pressure of the exhaust gas emanating from the engine **21** according to the present invention is approximately 25 p.s.i. In this way, the compressor **109** does not have to pull the exhaust into the compressor since the gas exhausted from the engine **21** is at a positive pressure. The positive pressure of the incoming fluid increases the efficiency and reduces wear on the compressor **109**. The exhaust gas is compressed in the compressor **109** and returned through a line **111** and a check valve **113** to the compressed gas storage tank **23**. The check valve **113** prevents the flow of compressed gas stored in the tank **23** back towards the compressor **109**.

A suitable pressure sensor **115** is arranged at an upper end of the tank **23** and sends a signal along a line **117** when the pressure exceeds a predetermined level and when the pressure drops below a predetermined level. The line **117** controls an electrically activated clutch **119** positioned at the front end of the compressor **109**. The clutch **119** is operated to engage and disengage the compressor **109** from a drive pulley **121**. Also, the signal carried by the line **117** activates a suitable valve **123** arranged on compressor housing **125** to exhaust the air entering the compressor housing **125** from the line **107** when the clutch **119** has disengaged the compressor **109** from the drive pulley **121**.

In a preferred embodiment, when the pressure is the tank **23** reaches approximately 600 p.s.i., the clutch **119** is disengaged and the compressor **109** is deactivated and the valve **123** is opened to exhaust the expanded gas delivered to the compressor **109** from the line **107** to the atmosphere. When the pressure within the tank **23** drops below approximately 500 p.s.i., the sensor **115** sends a signal to engage the clutch **119** and close the valve **123**, thereby operating the compressor **109** for supplying the tank **23** with compressed gas.

The pulley **121** which drives the compressor **109** through the clutch **119** is driven by a belt **127** which is driven by a pulley **129** which operates through a gear box **131**. With reference to **Fig.1** and **Fig.8**, a second pulley **133** on the gear box is driven by a belt **135** from a pulley **137** arranged on a drive shaft **139** of the engine **21**. The pulley **137** drives a splined shaft **140** which has a first gear **141** and a second larger gear **143** placed on it, which rotates with the splined shaft **140**. The splined shaft **140** permits axial movement of the gears **141** and **143** along the shaft **140**.

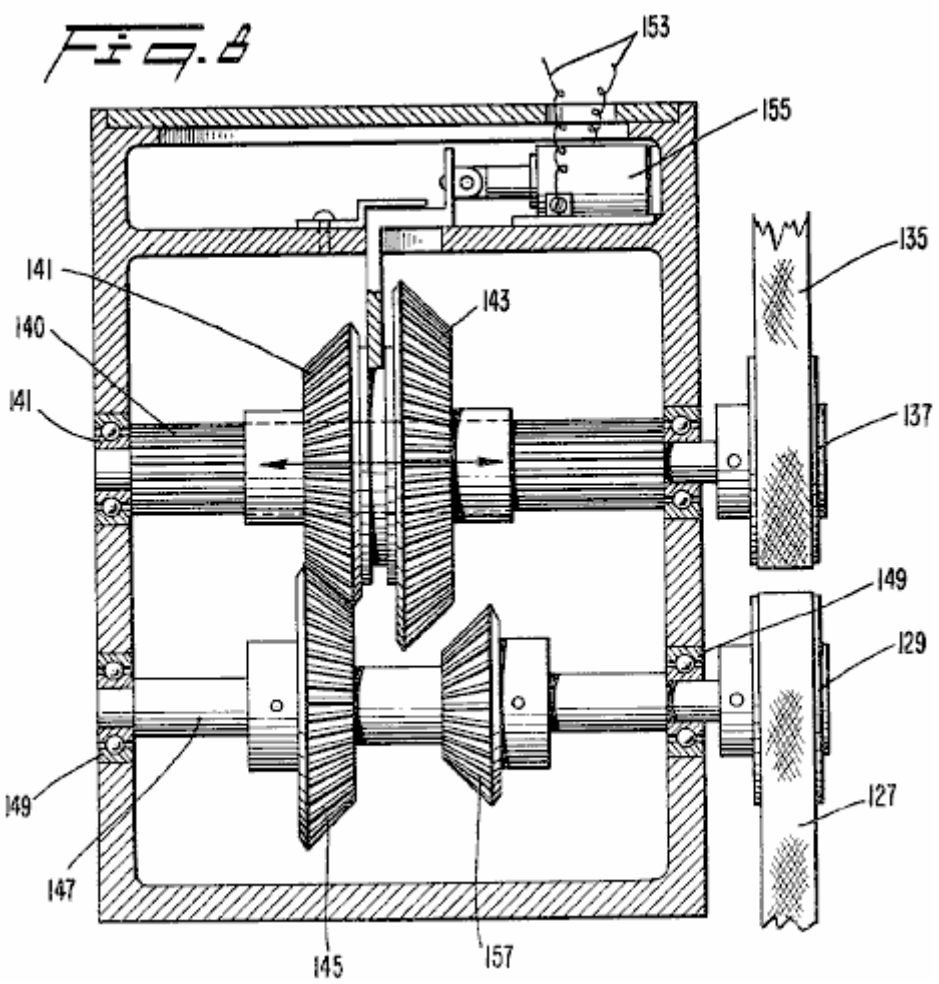

In normal operation (as seen in **Fig.8**), the first gear **141** engages a third gear **145** arranged on a shaft **147** which drives the pulley **129**. The shafts **140** and **147** are arranged in suitable bearings **149** positioned at each end of it. When the speed of the engine **21** drops below a predetermined level, a suitable sensor **151** responsive to the speed of the drive shaft **139** of the engine **21** generates a signal which is transmitted through a line **153** to a solenoid actuator **155** arranged within the gear box **131**. The solenoid actuator **155** moves the first and second gears **141**, **143** axially along the splined shaft **140** to the right as seen in **Fig.8** so that the second, larger gear **143** engages a fourth smaller gear **157** which is arranged on the shaft **147**. The ratio of the second gear **143** to the fourth gear **157** is preferably approximately 3 to 1.

In this way, when the speed of the engine **21** drops below the predetermined level as sensed by the sensor **151** (which predetermined level is insufficient to drive the compressor **109** at a speed sufficient to generate the 500-600 pounds of pressure which is preferably in the tank **23**), the solenoid actuator **155** is energised to slide the gears **143**, **141** axially along the splined shaft **140** so that the second, larger gear **143** engages the fourth, smaller gear **157** to drive the pulley **129** and hence the compressor **109** at a higher rate, to generate the desired pressure. When the speed of the engine increases above the predetermined level, which, in a preferred embodiment is approximately 1500 rpm, the solenoid actuator **155** is deactivated by the sensor **151** thereby moving the gears **143** and **141** to the left as seen in **Fig.8** so that the first gear **141**, engages again with the third gear **145** to effectuate a 1 to 1 ratio between the output shaft **139** of the engine **21** and the pulley **129**.

The other bank of the V-8 engine has its exhaust ports arranged with adapter plates **103** similar to those on the first bank. However, the exhaust from this bank of the engine **21** is not collected and circulated through the compressor **109**. In a preferred embodiment, a portion of the exhaust is collected in a line **159** and fed to an enlarged chamber **161**. A second fluid is fed through a line **163** into the chamber **161** to be cooled by the cool exhaust emanating from the engine **21** in the line **159**. The second fluid in the line **163** may be either transmission fluid contained in a transmission associated with the engine **21** or a portion of the oil used to lubricate the engine **21**. A second portion of the exhaust from the second bank of the V-8 engine is removed from the line **159** in a line **165** and used as a working fluid in an air conditioning system or for any other suitable use.

It should be noted that the particular arrangement utilised for collecting and distributing the gas exhausted from the engine **21** would be determined by the use for which the engine is employed. In other words, it may be

advantageous to rearrange the exhaust tubing such that a larger or smaller percentage of the exhaust is routed through the compressor **109**. It should also be noted that since the exhaust lines **105** are plastic tubing, a rearrangement of the lines for a different purpose is both simple and inexpensive.

In operation of the engine of the present invention, the engine **21** is started by energising the solenoid valve **29** and any suitable starting device (not shown), e.g., a conventional electric starter as used on an internal combustion engine. Compressed gas from the full tank **23** flows through the line **25** and a variable amount of the compressed gas is admitted to the distributor **33** by controlling the regulator valve **31** through the linkage **33** and the operator actuated throttle linkage **35**. The compressed gas is distributed to each of the lines **37** which lead to the individual cylinders **20**. The compressed gas is admitted to each of the cylinders **20** in timed relationship to the position of the pistons within the cylinders by opening the valves **39** with the valve actuator **41**.

When it is desired to increase the speed of the engine, the operator moves the throttle linkage **35** which simultaneously admits a larger quantity of compressed gas to the distributor **33** from the tank **23** by further opening the regulator valve **31**. The timing of the valve actuator **41** is also advanced through the linkage **104**. Still further, as the speed of the engine **21** increases, the effective length of the rotating contact **83** (**Fig.4**) or **95** (**Fig.6**) increases thereby electrically contacting a wider portion of one of the stationary radial contacts **85** to cause each of the valves **39** to remain open for a longer period of each engine cycle to admit a larger quantity of compressed gas to each of the cylinders **20**.

As can be seen, the combination of the regulating valve **31**, the mechanical advance **104**, and the valve actuator **41**, combine to produce a compressed gas engine which is quickly and efficiently adaptable to various operating speeds. However, all three of the controls need not be employed simultaneously. For example, the mechanical advance **104** could be utilised without the benefit of one of the varying valve actuators **41** but the high speed operation of the engine may not be as efficient. By increasing the duration of each engine cycle over which each of the valves **39** remains open to admit compressed gas to each of the cylinders **20** as the speed increases, conservation of compressed gas during low speed operation and efficient high speed operation are both possible.

After the compressed gas admitted to the cylinder **20** has forced the piston **22** downwards within the cylinder to drive the shaft **139** of the engine, the piston **22** moves upwards within the cylinder **20** and forces the expanded gas out through a suitable exhaust valve (not shown) through the adapter plate **103** (if employed) and into the exhaust line **105**. The cool exhaust can then be collected in any suitable arrangement to be compressed and returned to the tank **23** or used for any desired purpose including use as a working fluid in an air conditioning system or as a coolant for oil.

When using the apparatus and method of the present invention to adapt a ordinary internal combustion engine for operation with compressed gas it can be seen that considerable savings in weight are achieved. For example, the ordinary cooling system including a radiator, fan, hoses, etc. can be eliminated since the compressed gas is cooled as it expands in the cylinder. In addition, there are no explosions within the cylinder to generate heat. Further reductions in weight are obtained by employing plastic tubing for the lines which carry the compressed gas between the distributor and the cylinders and for the exhaust lines. Once again, heavy tubing is not required since there is little or no heat generated by the engine of the present invention. In addition, the noise generated by an engine according to the present invention is considerably less than that generated by an ordinary internal combustion engine since there are no explosions taking place within the cylinders.

The principles of preferred embodiments of the present invention have been described in the foregoing specification. However, the invention which is intended to be protected is not to be construed as limited to the particular embodiments disclosed. The embodiments are to be regarded as illustrative rather than restrictive. Variations and changes may be made by others without departing from the spirit of the invention. Accordingly, it is expressly intended that all such variations and changes which fall within the spirit and the scope of the present invention as defined in the appended claims be embraced thereby.

Eber Van Valkinburg's Compressed Fluid Engine

Patent US 3,744,252 10th July 1973 Inventor: Eber Van Valkinburg

CLOSED MOTIVE POWER SYSTEM UTILISING COMPRESSED FLUIDS

ABSTRACT

Stored energy in a compressed elastic fluid is utilised in a controlled manner to pressurise an inelastic fluid and to maintain such pressurisation. The pressurised inelastic fluid is throttled to the impeller of a prime mover. Only a portion of the output energy from the prime mover is utilised to circulate the inelastic fluid so as to maintain a nearly constant volumetric balance in the system.

DESCRIPTION

The objective of the invention is to provide a closed-loop power system which utilises the expansive energy of a compressed elastic fluid, such as air, to pressurise and maintain pressurised throughout the operational cycle of the system a second non-elastic and non-compressible fluid, such as oil. The pressurised non-elastic fluid is released in a controlled manner by a throttle to the rotary impeller of a turbine or the like, having an output shaft. This shaft is coupled to a pump for the non-elastic fluid which automatically maintains the necessary circulation needed for the operation of the prime mover, and maintains a near volumetric balance in the system between the two fluids which are separated by self-adjusting free piston devices. The pump for the non-elastic fluid includes an automatic by-pass for the non-elastic fluid which eliminates the possibility of starving the pump which depends on the discharge of the non-elastic fluid at low pressure from the exhaust of the turbine. Other features and advantages of the invention will become apparent during the course of the following detailed description.

BRIEF DESCRIPTION OF DRAWING FIGURES

Fig.1 is a partly schematic cross-sectional view of a closed motive power system embodying the invention.

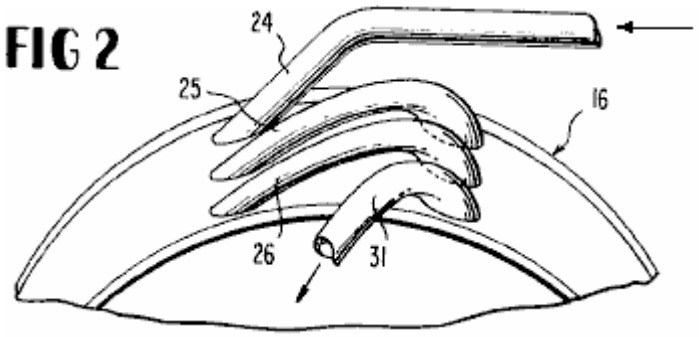

Fig.2 is a fragmentary perspective view of a rotary prime mover utilised in the system.

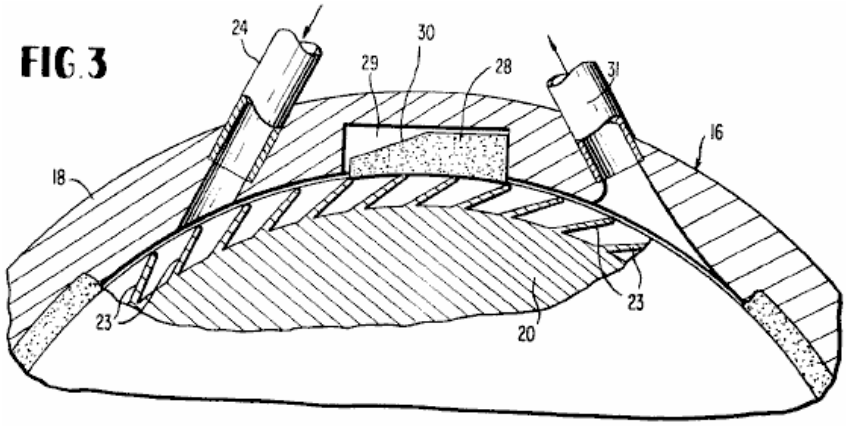

Fig.3 is an enlarged fragmentary vertical section through the prime mover taken at right angles to its rotational axis.

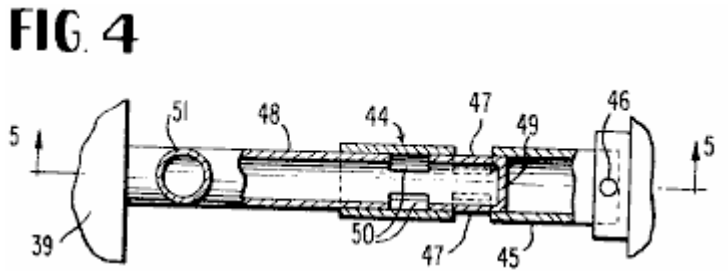

Fig.4 is an enlarged fragmentary vertical section taken on line **4--4** of **Fig.1**.

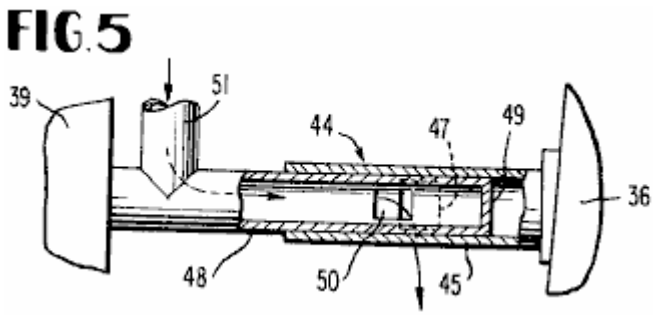

Fig.5 is a similar section taken on line **5--5** of **Fig.4**.

DETAILED DESCRIPTION

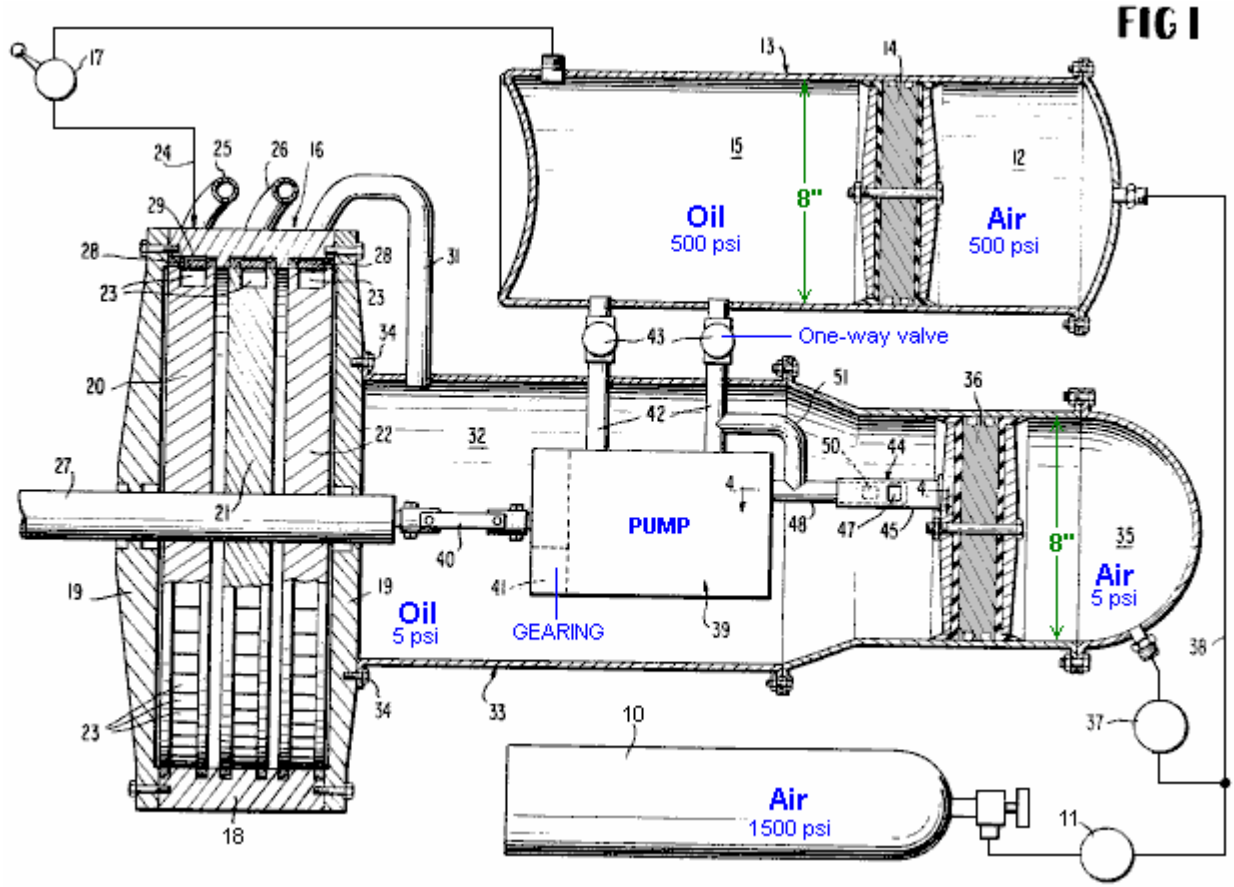

Referring to the drawings in detail, in which the same numbers refer to the same parts in each drawing, the numeral **10** designates a supply bottle or tank for a compressed elastic fluid, such as air. Preferably, the air in the bottle **10** is compressed to approximately 1,500 p.s.i. The compressed air from the bottle **10** is delivered through a suitable pressure regulating valve **11** to the chamber **12** of a high pressure tank **13** on one side of a free piston **14** in the bore of such tank. The free piston **14** separates the chamber **12** for compressed air from a second chamber **15** for an inelastic fluid, such as oil, on the opposite side of the free piston. The free piston **14** can move axially within the bore of the cylindrical tank **13** and is constantly self-adjusting there to maintain a proper volumetric balance between the two separated fluids of the system. The free piston has the ability to maintain the two fluids, air and oil, completely separated during the operation of the system.

The regulator valve **11** delivers compressed air to the chamber **12** under a pressure of approximately 500 p.s.i. The working inelastic fluid, oil, which fills the chamber **15** of high pressure tank **13** is maintained under 500 p.s.i. pressure by the expansive force of the elastic compressed air in the chamber **12** on the free piston **14**. The oil in the chamber **15** is delivered to a prime mover **16**, such as an oil turbine, through a suitable supply regulating or throttle valve **17** which controls the volume of pressurised oil delivered to the prime mover.

The turbine **16** embodies a stator consisting of a casing ring **18** and end cover plates **19** joined to it in a fluid- tight manner. It further embodies a single or plural stage impeller or rotor having bladed wheels **20**, **21** and **22** in the illustrated embodiment. The peripheral blades **23** of these turbine wheels receive the motive fluid from the pressurised chamber **15** through serially connected nozzles **24**, **25** and **26**, connected generally tangentially through the stator ring **18**, as shown in **Fig.3**. The first nozzle **24** shown schematically in **Fig.1** is connected directly with the outlet of the throttle valve **17**. The successive nozzles **25** and **26** deliver the pressurised working fluid serially to the blades **23** of the turbine wheels **21** and **22**, all of the turbine wheels being suitably coupled to a central axial output or working shaft **27** of the turbine **16**.

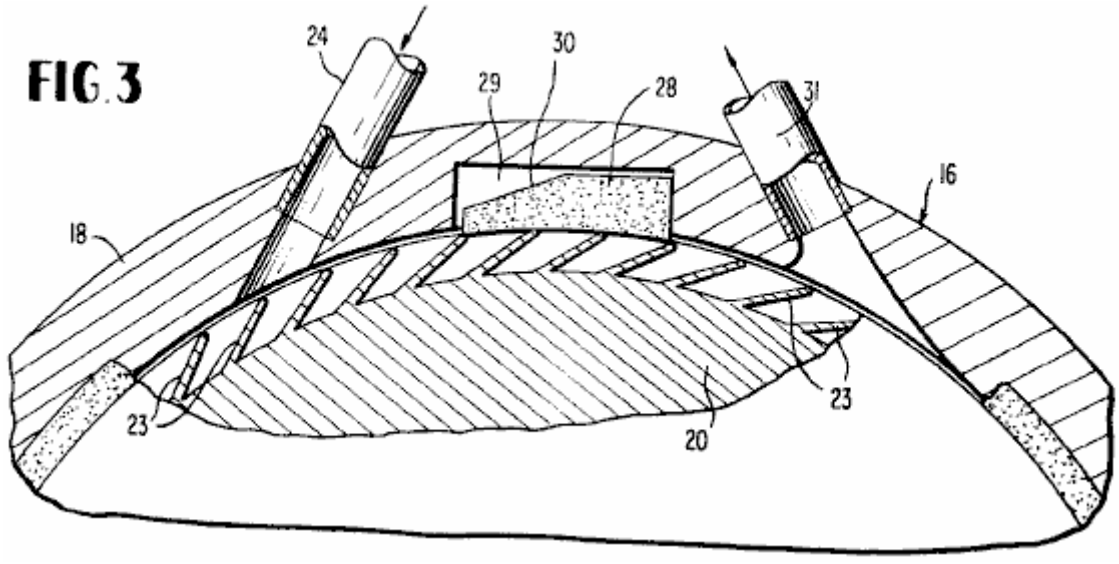

Back-pressure sealing blocks **28**, made of fibre, are contained within recesses **29** of casing ring **18** to prevent co-mingling of the working fluid and exhaust at each stage of the turbine. A back-pressure sealing block **28** is actually only required in the third stage between inlet **26** and exhaust **31**, because of the pressure distribution, but such a block can be included in each stage as shown in **Fig.1**. The top surface, including a sloping face portion **30** on each block **28**, reacts with the pressurised fluid to keep the fibre block sealed against the adjacent, bladed turbine wheel; and the longer the slope on the block to increase it's top surface area, the greater will be the sealing pressure pushing it against the periphery of the wheel.

Leading from the final stage of the turbine **16** is a low-pressure working fluid exhaust nozzle **31** which delivers the working fluid, oil, into an oil supply chamber or reservoir **32** of a low pressure tank **33** which may be bolted to the adjacent end cover plate **19** of the turbine, as indicated at **34**. The oil entering the reservoir chamber **32** from the exhaust stage of the turbine is at a pressure of about 3-5 p.s.i. In a second chamber **35** of the low pressure tank **33** separated from the chamber **32** by an automatically moving or self-adjusting free piston **36**, compressed air at a balancing pressure of from 3-5 p.s.i. is maintained by a second pressure regulating valve **37**. The pressure regulating valve **37** is connected with the compressed air supply line **38** which extends from the regulating valve **11** to the high pressure chamber **12** for compressed air.

Within the chamber **32** is a gear pump **39** or the like having its input shaft connected by a coupling **40** with the turbine shaft **27**. Suitable reduction gearing **41** for the pump may be provided internally, as shown, or in any other conventional manner, to gear down the rotational speed derived from the turbine shaft. The pump **39** is supplied with the oil in the filled chamber **32** delivered by the exhaust nozzle or conduit **31** from the turbine. The pump, as illustrated, has twin outlet or delivery conduits **42** each having a back-pressure check valve **43** connected therein and each delivering a like volume of pressurised oil back to the high pressure chamber **15** at a pressure of about 500 p.s.i. The pump **39** also has twin fluid inlets. The pump employed is preferably of the type known on the market as "Hydreco Tandem Gear Pump," Model No. 151515, L12BL, or equivalent. In some models, other types of pumps could be employed including pumps having a single inlet and outlet. The illustrated pump will operate clockwise or counter-clockwise and will deliver 14.1 g.p.m. at 1,800 r.p.m. and 1,500 p.s.i. Therefore, in the present application of the pump **39**, it will be operating at considerably less than capacity and will be under no undue stress.

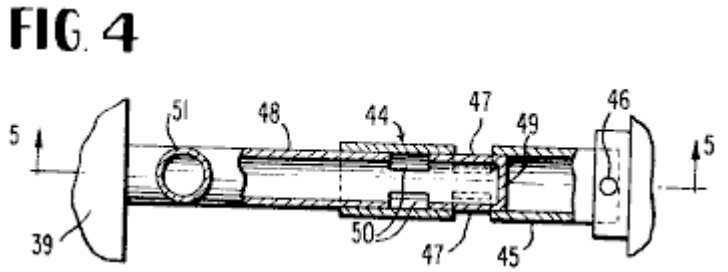

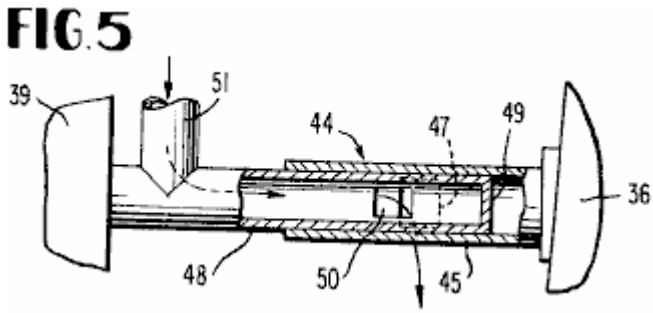

Since the pump depends for its supply of fluid on the delivery of oil at low pressure from the turbine **16** into the chamber **32**, an automatically operating by-pass sleeve valve device **44** for oil is provided as indicated in **Fig.1**, **Fig.4** and **Fig.5**. This device comprises an exterior sleeve or tube **45** having one end directly rigidly secured as at **46** to the movable free piston **36**. This sleeve **45** is provided with slots **47** intermediate its ends. A co-acting interior sleeve **48** engages telescopically and slidably within the sleeve **45** and has a closed end wall **49** and ports or slots **50** intermediate its ends, as shown. The sleeve **48** communicates with one of the delivery conduits **42** by way of an elbow **51**, and the sleeve **48** is also connected with the adjacent end of the pump **39**, as shown.

As long as the chamber **32** is filled with low pressure oil sufficient to balance the low air pressure in the chamber **35** on the opposite side of free piston **36**, such piston will be positioned as shown in **Fig.1** and **Fig.4** so that the slots **47** and **50** of the two sleeves **45** and **48** are out of registration and therefore no flow path exists through them. Under such circumstances, the oil from the chamber **32** will enter the pump and will be delivered by the two conduits **42** at the required pressure to the chamber **15**. Should the supply of oil from the turbine **16** to the chamber **32** diminish so that pump **39** might not be adequately supplied, then the resulting drop in pressure in the chamber **32** will cause the free piston **36** to move to the left in **Fig.1** and bring the slots **47** into registration or partial registration with the slots **50**, as depicted in **Fig.5**. This will instantly establish a by-pass for oil from one conduit **42** back through the elbow **51** and tubes **48** and **45** and their registering slots to the oil chamber **32** to maintain this chamber filled and properly pressurised at all times. The by-pass arrangement is completely automatic and responds to a diminished supply of oil from the turbine into the chamber **32**, so long as the required compressed air pressure of 3-5 p.s.i. is maintained in the chamber **35**.

Briefly, in summary, the system operates as follows. The pressurised inelastic and non-compressible fluid, oil, from the chamber **15** is throttled into the turbine **16** by utilising the throttle valve **17** in a control station. The resulting rotation of the shaft **27** produces the required mechanical energy or work to power a given instrumentality, such as a propeller. A relatively small component of this work energy is utilised through the coupling **40** to drive the pump **39** which maintains the necessary volumetric flow of oil from the turbine back into the high pressure chamber **15**, with the automatic by-pass **44** coming into operation whenever needed.

The ultimate source of energy for the closed power system is the compressed elastic fluid, air, in the tank or bottle **10** which through the regulating valves **11** and **37** maintains a constant air pressure in the required degree in each of the chambers **12** and **35**. As described, the air pressure in the high pressure chamber **12** will be approximately 500 p.s.i. and in the low pressure chamber **35** will be approximately 3-5 p.s.i.

It may be observed in **Fig.1** that the tank **33** is enlarged relative to the tank **13** to compensate for the space occupied by the pump and associated components. The usable volumes of the two tanks are approximately equal.

In an operative embodiment of the invention, the two free pistons **14** and **36** and the tank bores receiving them are 8 inches in diameter. The approximate diameters of the bladed turbine wheels are 18 inches. The pump **39** is approximately 10 inches long and 5 inches in diameter. The tank **13** is about 21 inches long between its crowned end walls. The tank **33** is 10 inches in diameter adjacent to the pump **39**.

The terms and expressions which have been employed herein are used as terms of description and not of limitation, and there is no intention, in the use of such terms and expressions, of excluding any equivalents of the features shown and described or portions thereof but it is recognised that various modifications are possible within the scope of the invention claimed.

Josef Papp's Inert Gas Engine

US Patent 4,428,193 **31st January 1984** **Inventor: Josef Papp**

INERT GAS FUEL, FUEL PREPARATION APPARATUS AND SYSTEM FOR EXTRACTING USEFUL WORK FROM THE FUEL

ABSTRACT

An inert gas fuel consisting essentially of a precise, homogeneous mixture of helium, neon, argon, krypton and xenon. Apparatus for preparing the fuel includes a mixing chamber, tubing to allow movement of each inert gas into and through the various stages of the apparatus, a plurality of electric coils for producing magnetic fields, an ion gauge, ionises, cathode ray tubes, filters, a polarise and a high frequency generator. An engine for extracting useful work from the fuel has at least two closed cylinders for fuel, each cylinder being defined by a head and a piston. A plurality of electrodes extend into each chamber, some containing low level radioactive material. The head has a generally concave depression facing a generally semi-toroidal depression in the surface of the piston. The piston is axially movable with respect to the head from a first position to a second position and back, which linear motion is converted to rotary motion by a crankshaft. The engine's electrical system includes coils and condensers which circle each cylinder, an electric generator, and circuitry for controlling the flow of current within the system.

BACKGROUND OF THE INVENTION

This invention relates to closed reciprocating engines, i.e., ones which do not require an air supply and do not emit exhaust gases, and more particularly to such engines which use inert gases as fuel. It also concerns such inert gas fuels and apparatus for preparing same.

Currently available internal combustion engines suffer from several disadvantages. They are inefficient in their utilisation of the energy present in their fuels. The fuel itself is generally a petroleum derivative with an ever-increasing price and sometimes limited availability. The burning of such fuel normally results in pollutants which are emitted into the atmosphere. These engines require oxygen and, therefore, are particularly unsuitable in environments, such as underwater or outer space, in which gaseous oxygen is relatively unavailable. Present internal combustion engines are, furthermore, relatively complex with a great number of moving parts. Larger units, such as fossil-fuel electric power plants, escape some of the disadvantages of the present internal combustion engine, but not, inter alia, those of pollution, price of fuel and availability of fuel.

Several alternative energy sources have been proposed, such as the sun (through direct solar power devices), nuclear fission and nuclear fusion. Due to the lack of public acceptance, cost, other pollutants, technical problems, and/or lack of development, these sources have not wholly solved the problem.
Moreover, the preparation of fuel for nuclear fission and nuclear fusion reactors has heretofore been a complicated process requiring expensive apparatus.

SUMMARY OF THE INVENTION

Among the several objects of the present invention may be noted the provision of an engine which is efficient; the provision of an engine which does not require frequent refuelling; the provision of an engine which develops no pollutants in operation; the provision of an engine which is particularly suited for use in environments devoid of free oxygen; the provision of an engine which requires no oxygen in operation; the provision of an engine having a relatively small number of moving parts; the provision of an engine of a relatively simple construction; the provision of an engine which can be used in light and heavy-duty applications; the provision of an engine which is relatively inexpensive to make and operate; the provision of a fuel which uses widely available components; the provision of a fuel which is relatively inexpensive; the provision of a fuel which is not a petroleum derivative; the provision of relatively simple and inexpensive apparatus for preparing inert gases for use as a fuel; the provision of such apparatus which mixes inert gases in precise, predetermined ratios; and the provision of such apparatus which eliminates contaminants from the inert gas mixture. Other objects and features will be in part apparent and in part pointed out hereinafter.

Briefly, in one aspect the engine of the present invention includes a head having a generally concave depression in it, the head defining one end of a chamber, a piston having a generally semi-toroidal depression in its upper surface, the piston defining the other end of the chamber, and a plurality of electrodes extending into the chamber for exciting and igniting the working fluid. The piston can move along its axis towards and away from the head, causing the volume of the chamber to alter, depending on the position of the piston relative to the head.

In another aspect, the engine of the present invention includes a head which defines one end of the chamber, a piston which defines the other end of the chamber, a plurality of magnetic coils wound around the chamber for generating magnetic fields inside the chamber, and at least four electrodes extending into the chamber for exciting and igniting the working fluid. The magnetic coils are generally coaxial with the chamber. The electrodes are generally equidistantly spaced from the axis of the chamber and are each normally positioned 90 degrees from the adjacent electrodes. Lines between opposed pairs of electrodes intersect generally on the axis of the chamber to define a focal point.

In a further aspect, the engine of the present invention includes a head which defines one end of a chamber, a piston which defines the other end of the chamber, at least two electric coils wound around the chamber for generating magnetic fields inside the chamber, and a plurality of electrodes extending into the chamber for exciting and igniting the working fluid. The electric coils are generally coaxial with the chamber. And the working fluid includes a mixture of inert gases.

The apparatus of the present invention for preparing a mixture of inert gases for use as a fuel includes a chamber, electric coils for generating predetermined magnetic fields inside the chamber, tubing adapted to be connected to sources of preselected inert gases for flow of the gases from the sources to the chamber, and ionisers for ionising the gases.

The fuel of the present invention includes a mixture of inert gases including approximately 36% helium, approximately 26% neon, approximately 17% argon, approximately 13% krypton, and approximately 8% xenon by volume.

BRIEF DESCRIPTION OF THE DRAWINGS

Fig.1 is a side elevation of an engine of this invention:
Fig.2 is a rear elevation of an engine of this invention:

FIG. 1

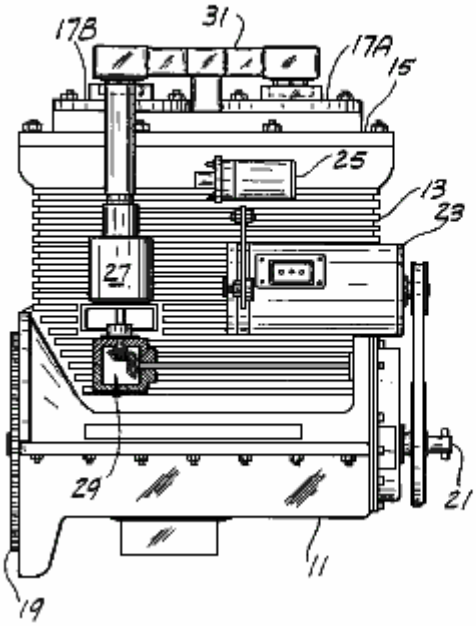

FIG. 2

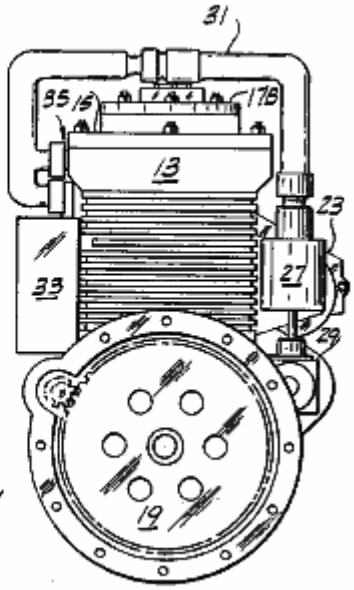

Fig.3 is a top view of an engine of this invention:

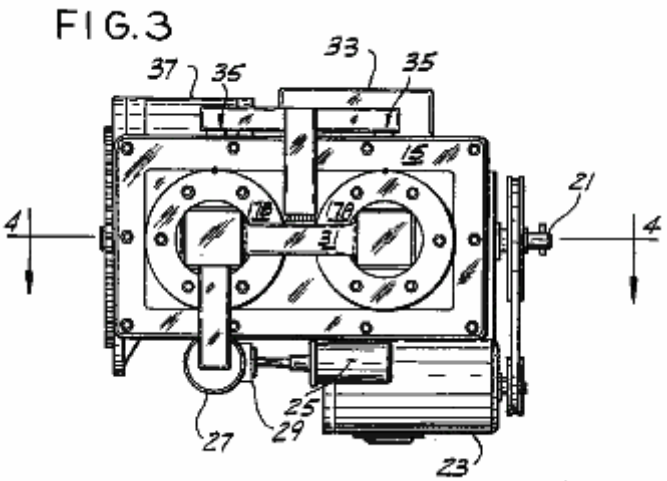

Fig.4 is a cross-sectional view generally along line **4--4** of **Fig.3** of an engine of this invention:

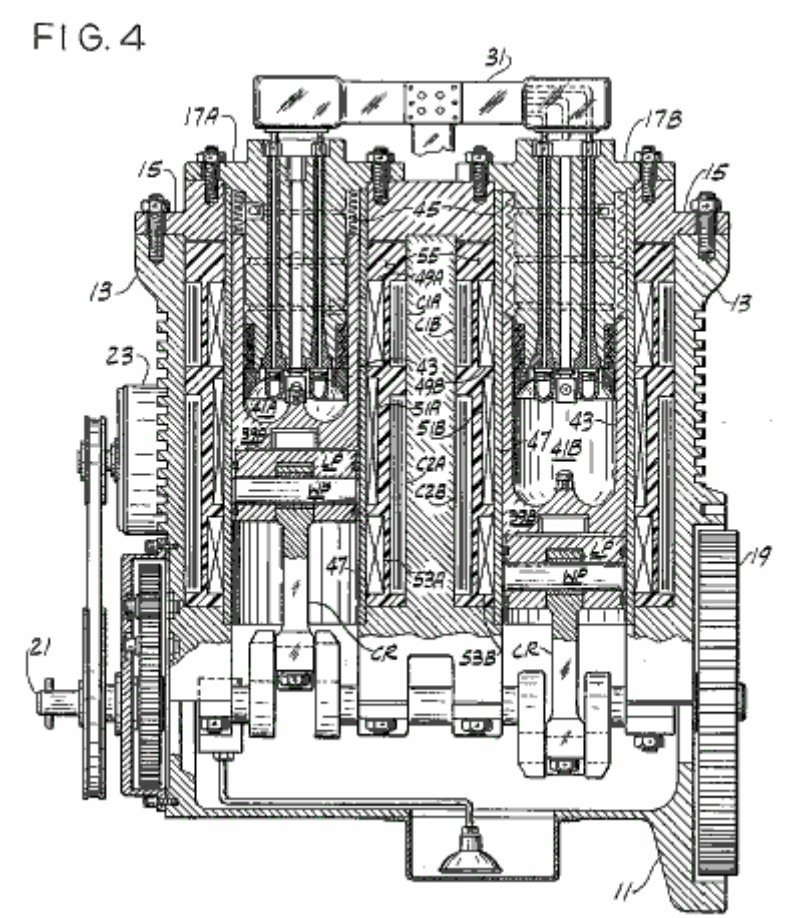

Fig.5 is a cross-sectional view of a cylinder of an engine of this invention:

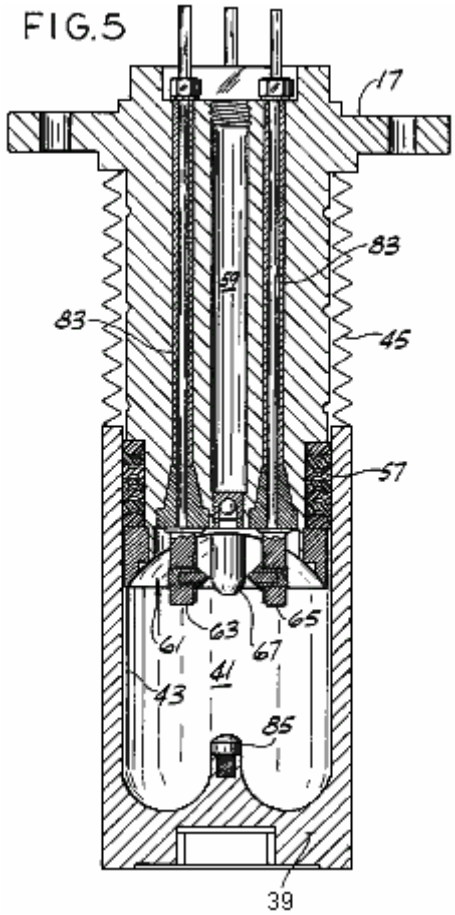

Fig.6 is a plan of the base of a cylinder head of an engine of this invention:

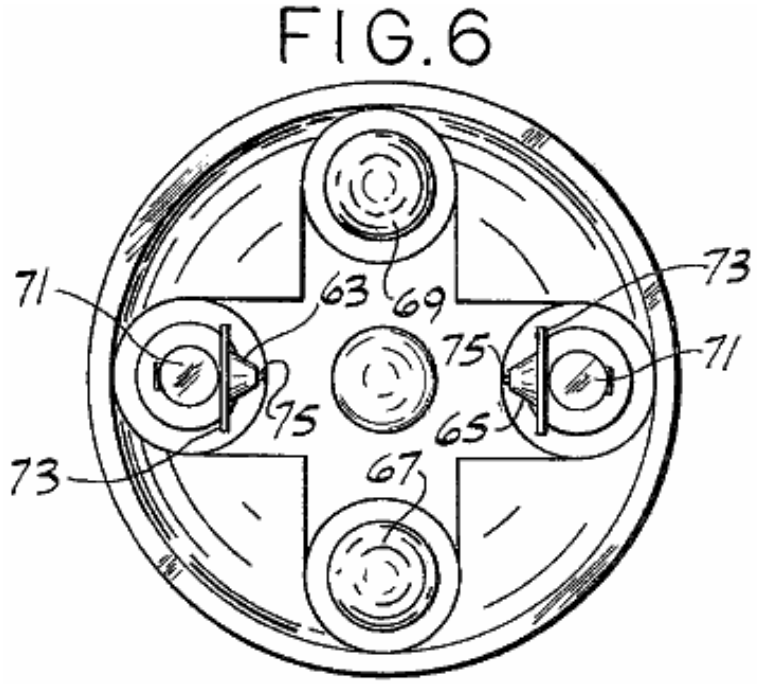

Fig.7 is an elevation of an electrode rod of an engine of this invention:

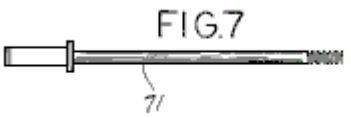

Fig.8 is an elevation, with parts broken away, of one type of electrode used in an engine of this invention:

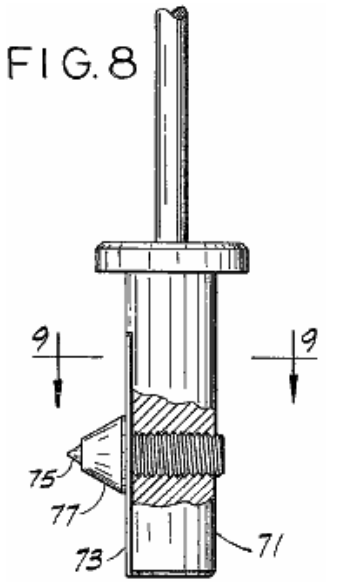

Fig.9 is a view taken generally along line **9--9** of **Fig.8**:

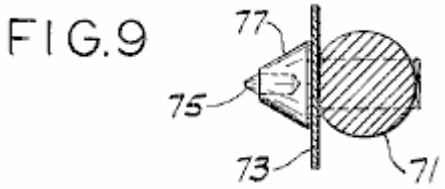

Fig.10 is a cross-sectional view of a second type of electrode used in an engine of this invention:

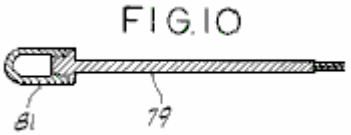

Fig.11 is a cross-sectional view similar to **Fig.5** showing the piston in its uppermost position:

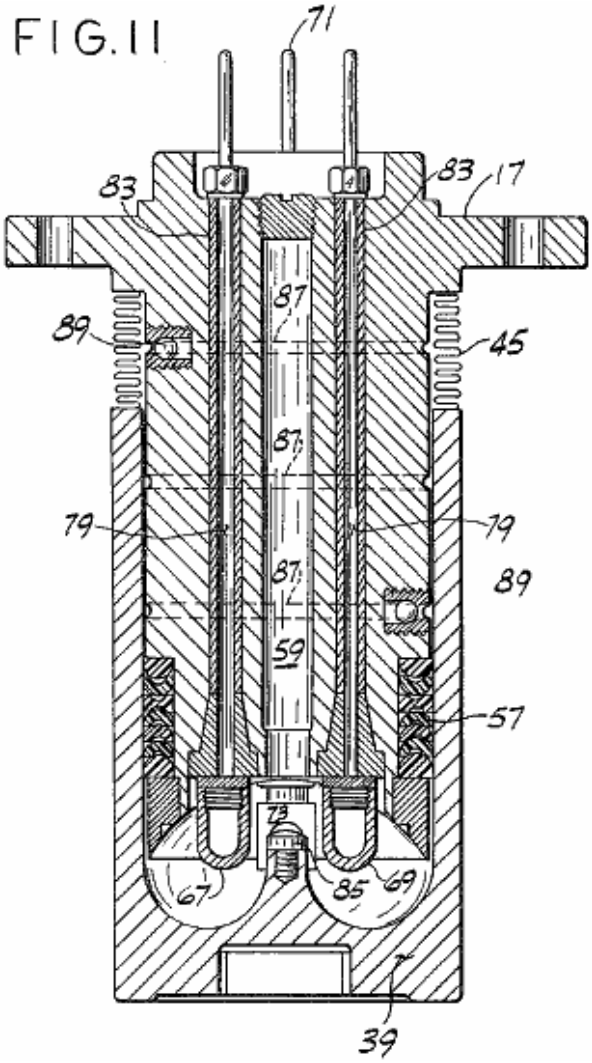

Fig.12 is a cross-sectional view similar to **Fig.5** showing an alternative cylinder used in an engine of this invention:

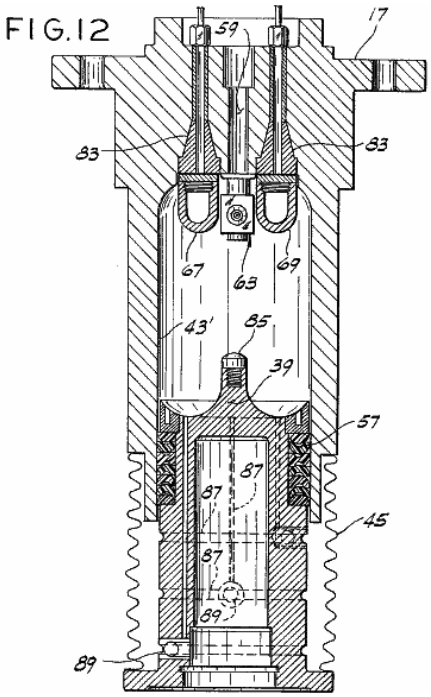

Fig.12A is a cross-sectional view similar to **Fig.5** and **Fig.12**, but on a reduced scale and with parts broken away, showing an additional embodiment of a cylinder head used in an engine of this invention:

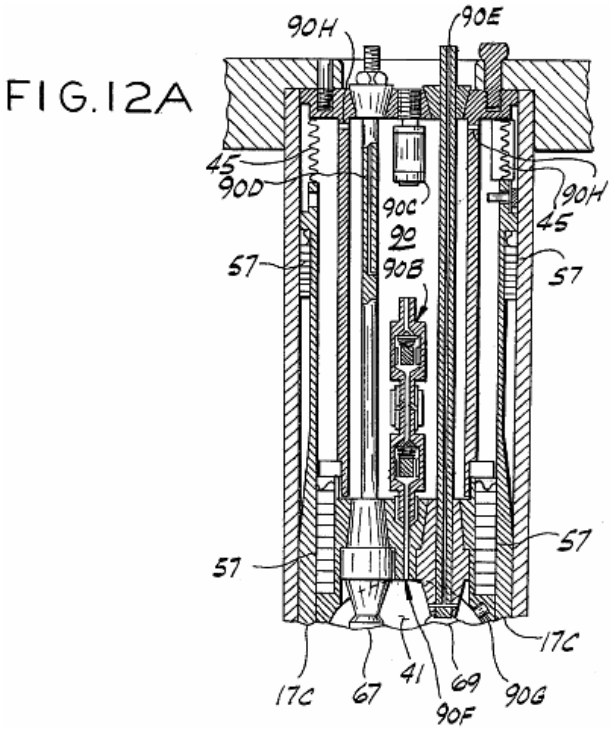

Fig.13A and **Fig.13B** are schematic diagrams of the electrical circuitry for an engine of this invention:

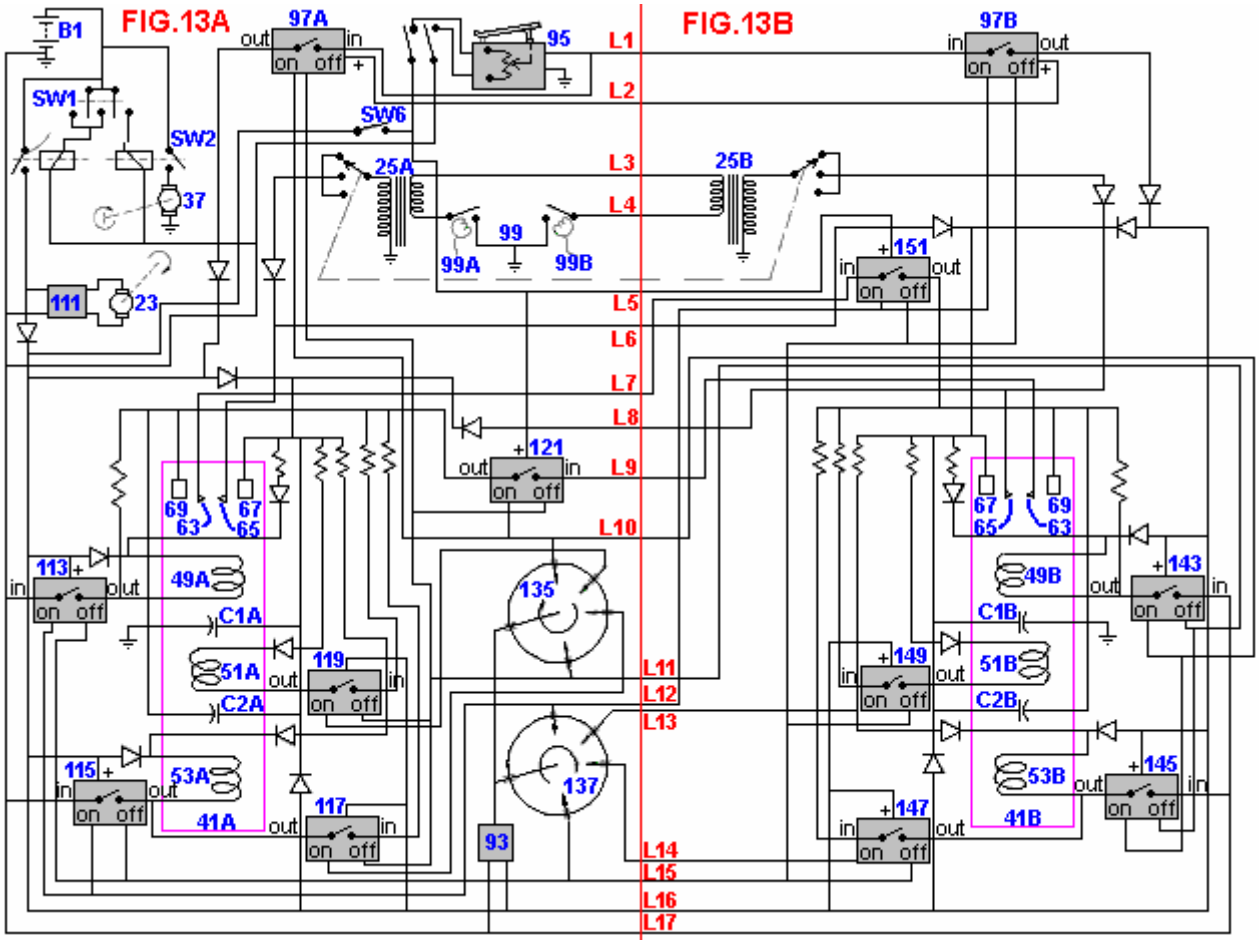

Fig.14 is a schematic diagram of an alternative high-voltage ignition system for an engine of this invention:

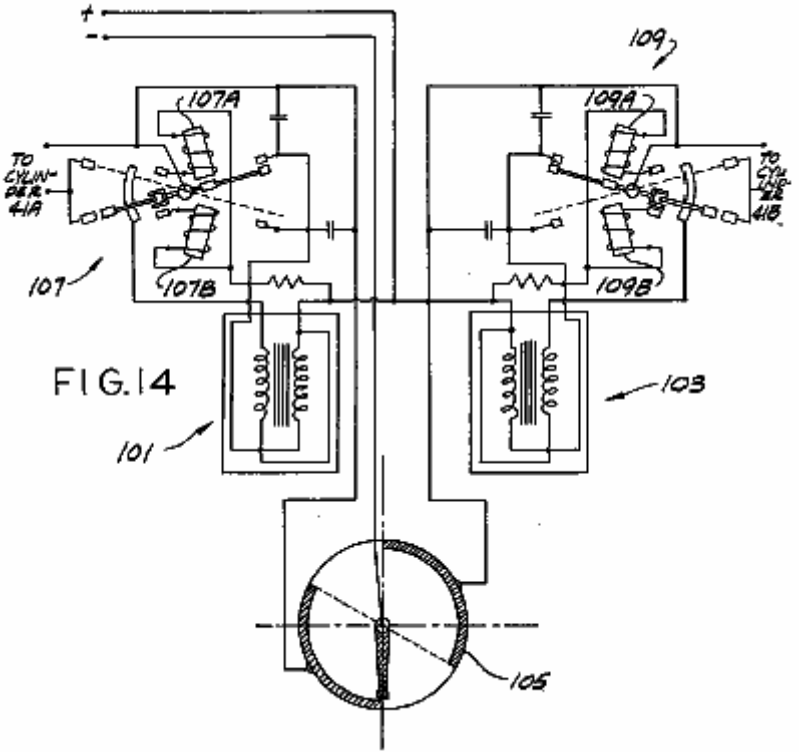

Fig.15 is a schematic diagram of an electronic switching unit for an engine of this invention:
Fig.16 is a schematic diagram of a regulator/electronic switching unit for an engine of this invention:

FIG.15

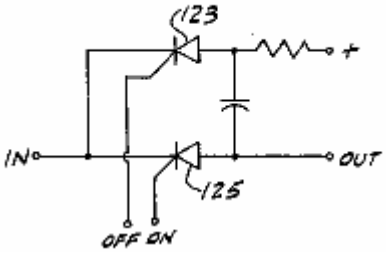

FIG.16

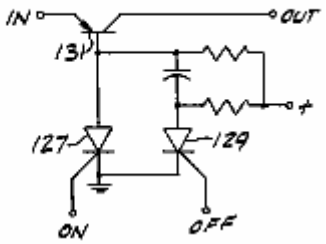

Figs.17A-17D are schematic diagrams of a fuel mixer of the present invention:

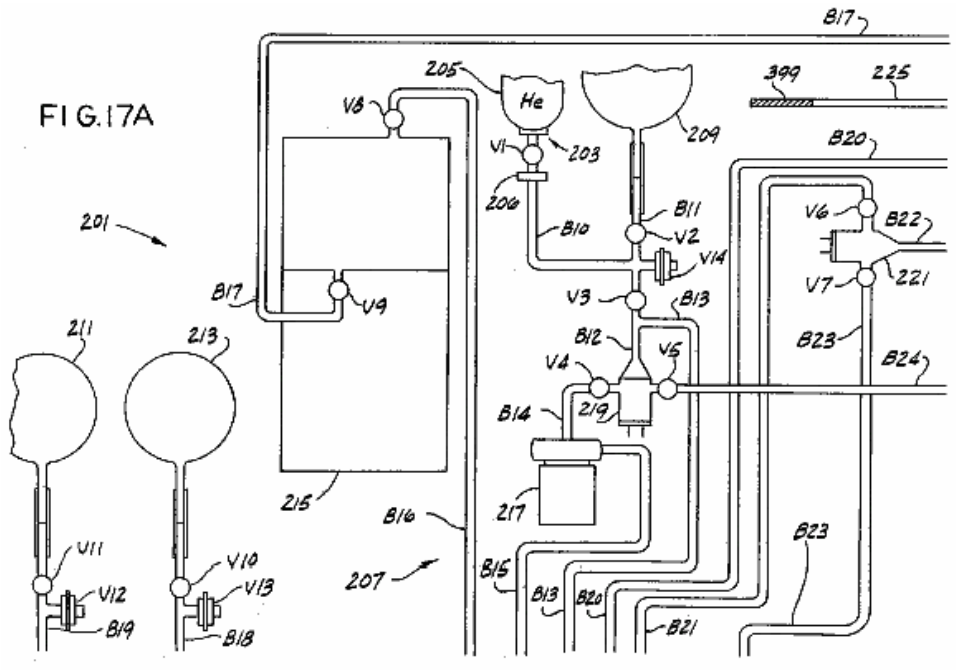

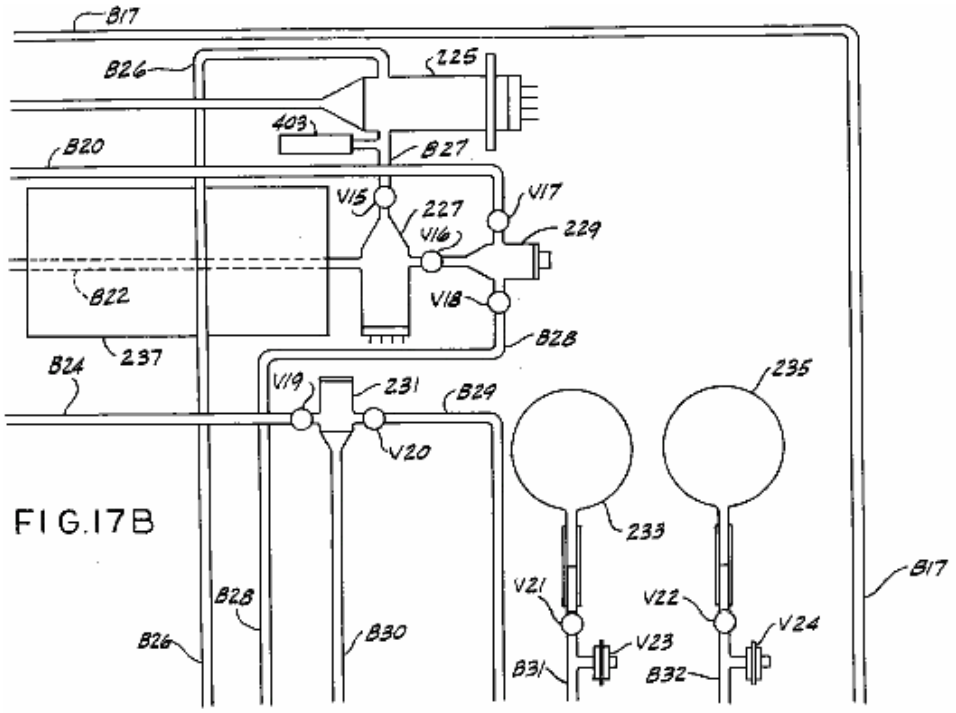

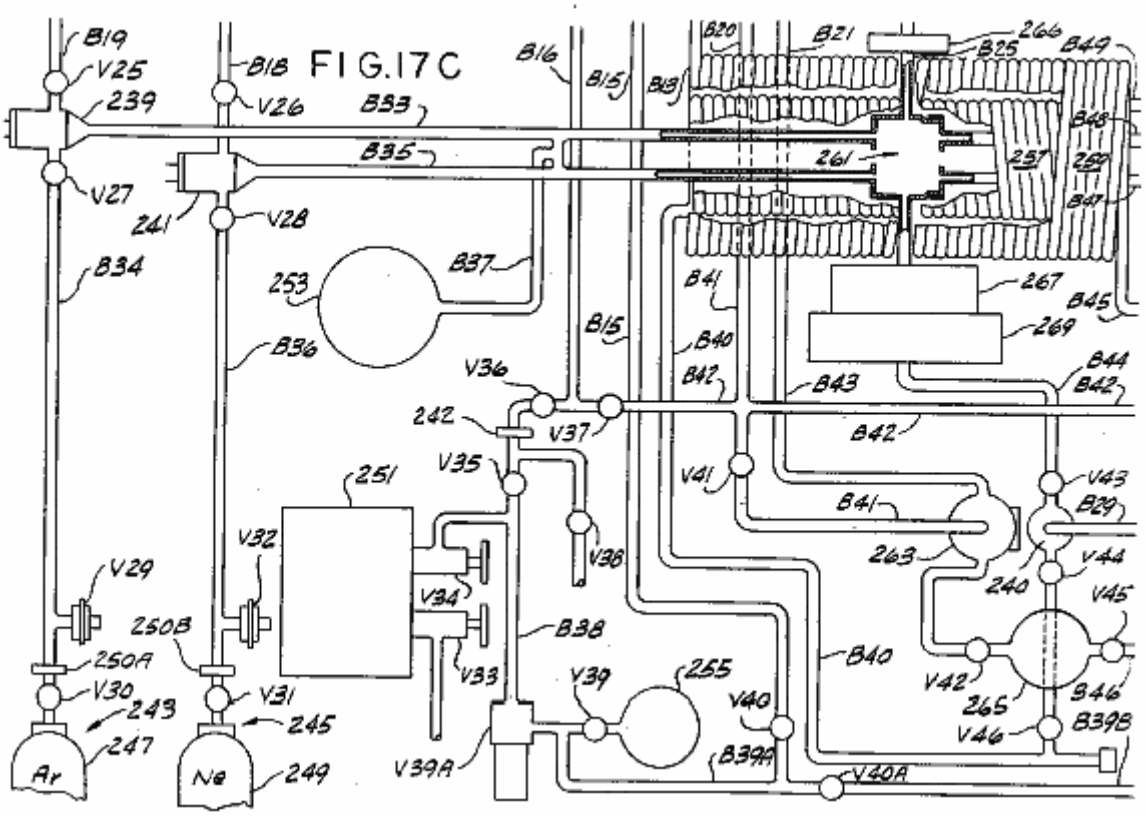
FIG.17C
B19
V25
239
B18
V26
B33
B16
B15
B13
B20
B21
266
B25
B49
B48
B35
261
257
260
B47
V27
241
V28
B34
253
B37
B41
267
B45
269
B15
B36
B40
V36
B42
B43
B44
B42
242
V37
B42
V35
251
V41
V43
B41
B29
V32
V38
263
V44
240
V29
V34
V45
250B
B38
B40
250A
V33
V39
255
V42
B46
V30
243
V31
245
V40
265
B39B
V46
247
Ar
Ne
249
V39A
B39A
V40A

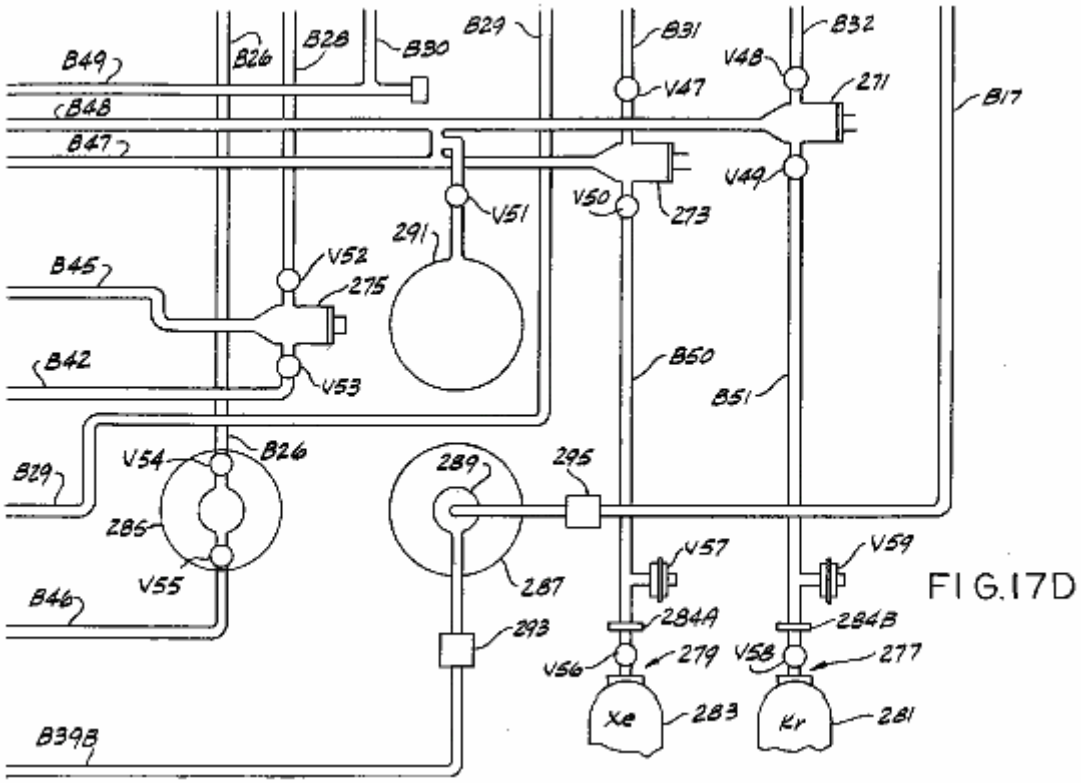
B49
B26
B28
B30
B29
B31
B32
V48
V47
271
B17
B48
B47
V49
V51
V50
273
291
V52
B45
275
B42
V53
B50
B51
B29
V54
B26
289
295
285
V55
287
V57
V59
B46
293
284A
284B
V56
279
V58
277
Xe
283
Kr
281
B39B

FIG.17D

Fig.18 is a schematic diagram of the mixing chamber portion of the fuel mixer shown in **Figs.17A-17D**:

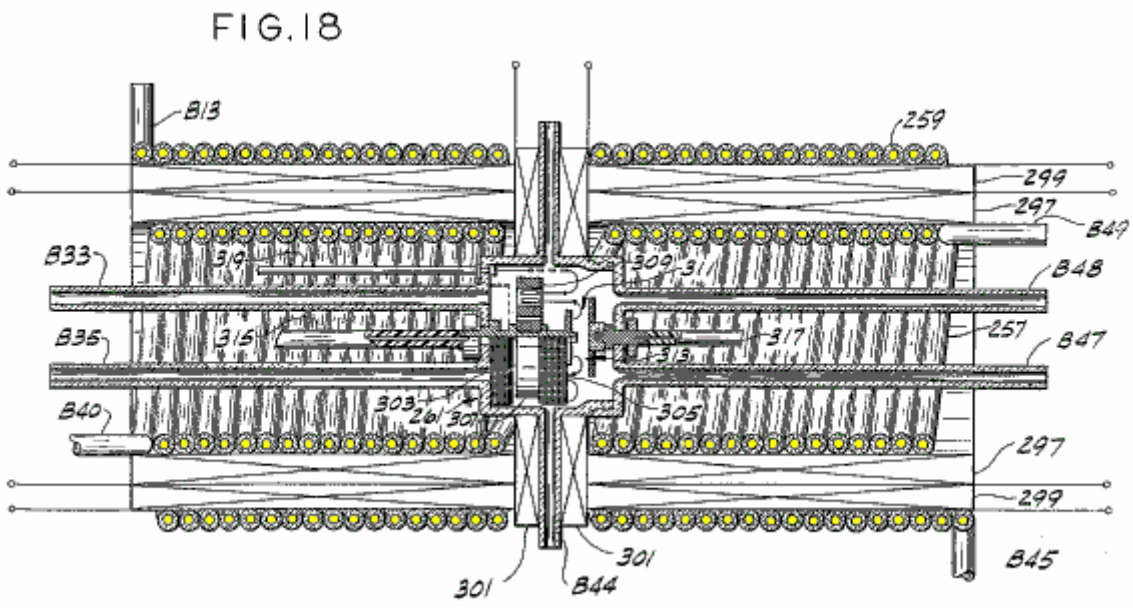

Figs.19A-19E are schematic diagrams of a portion of the electrical circuitry of the fuel mixer shown in **Figs.17A-17D**:

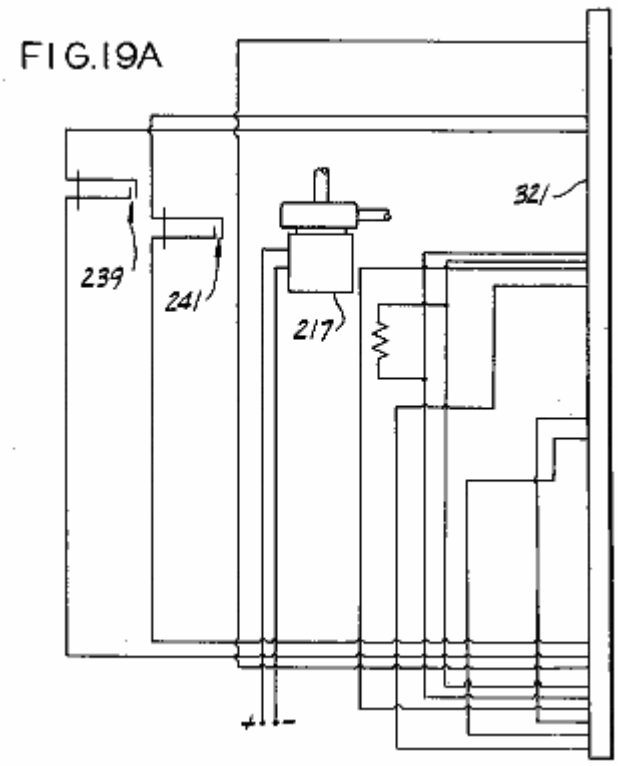

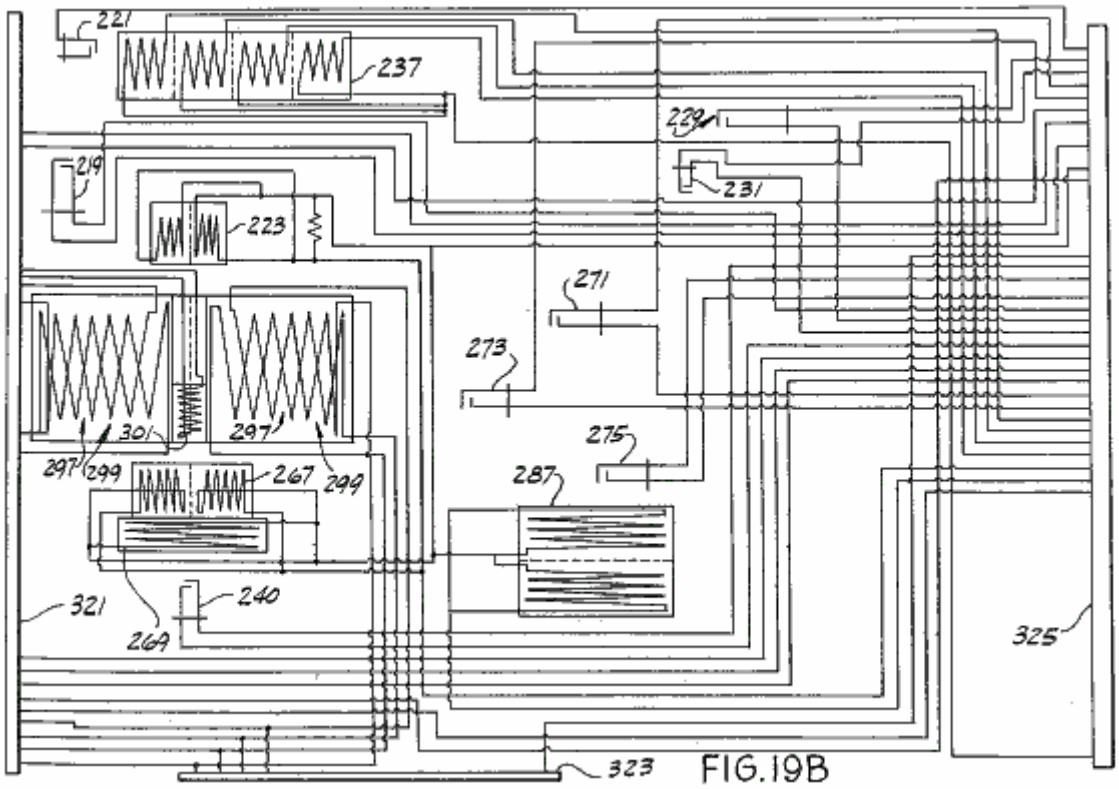

FIG.19B

FIG.19C

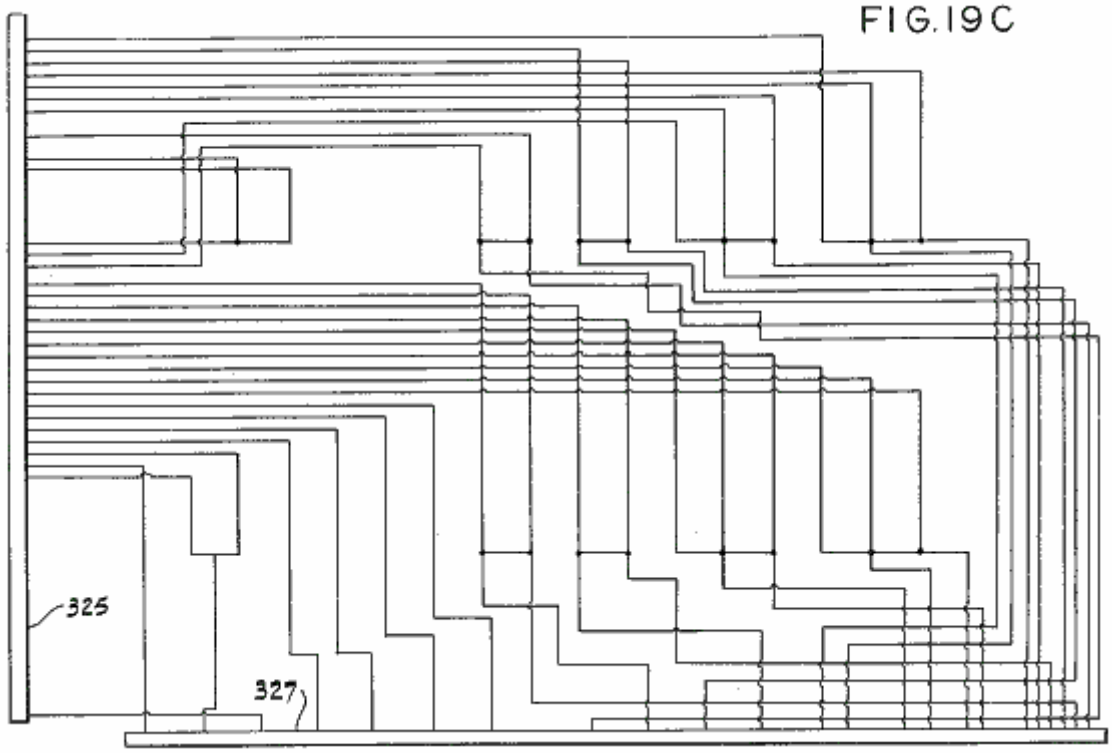

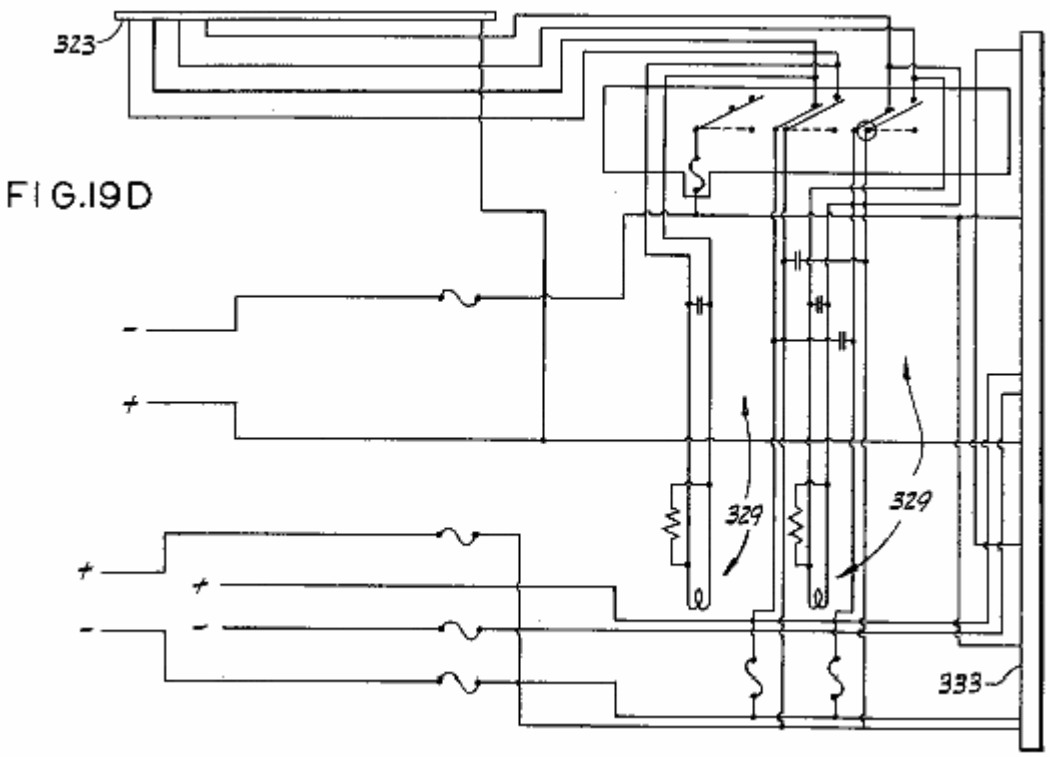

FIG.19D

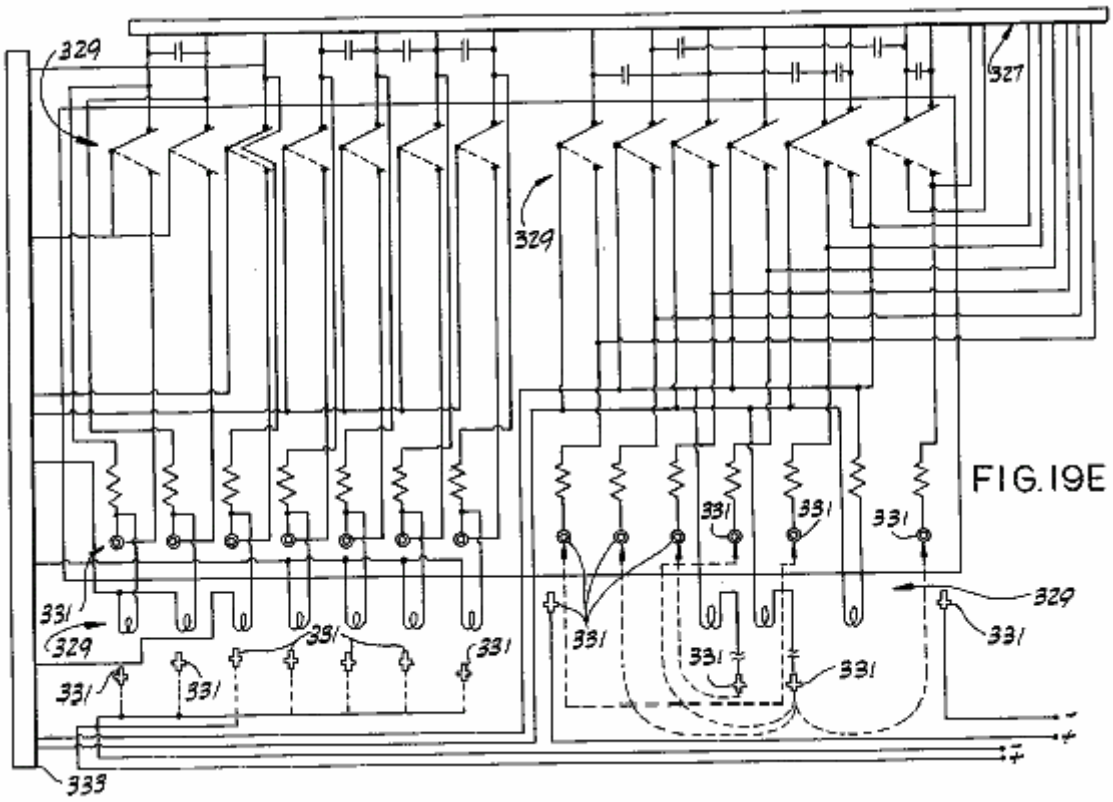

FIG.19E

Figs.20A-20F are schematic diagrams of the rest of the electrical circuitry of the fuel mixer shown in **Figs.17A-17D**:

FIG.20A

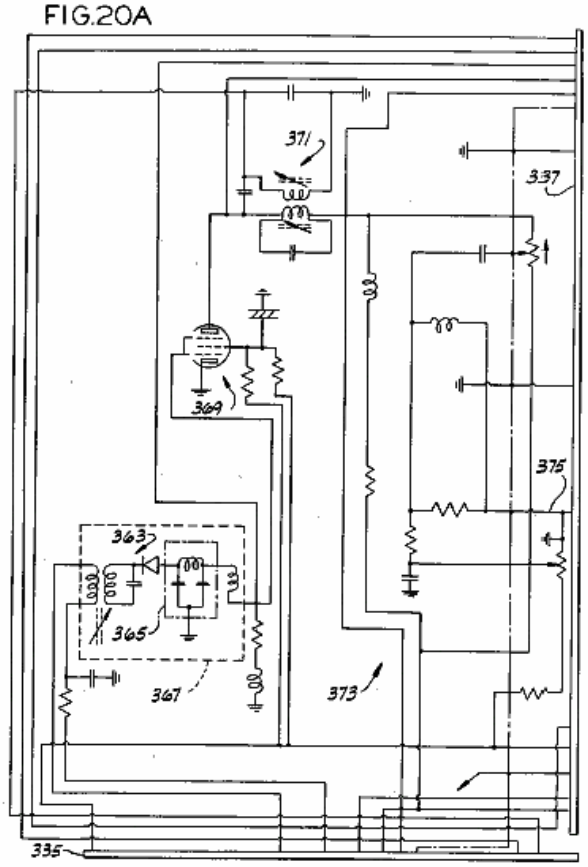

FIG.20B

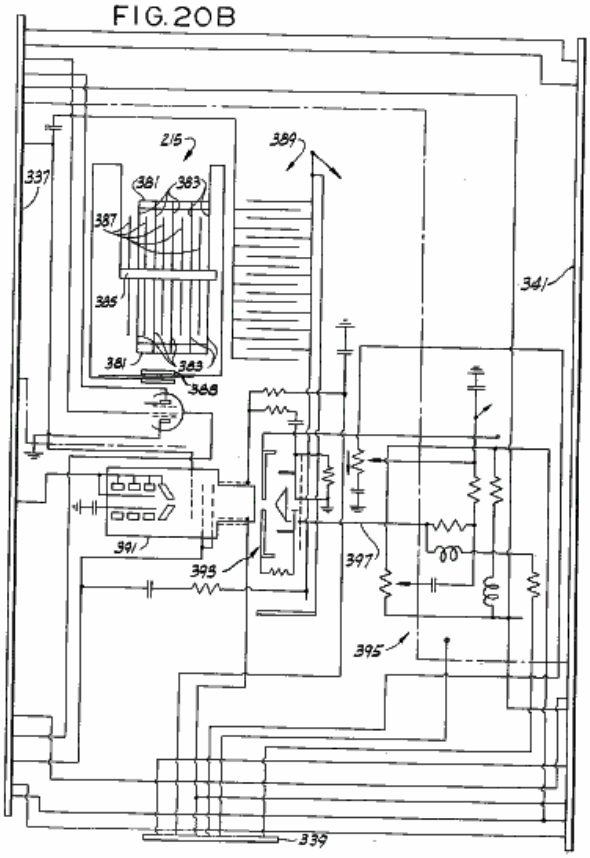

FIG. 20C

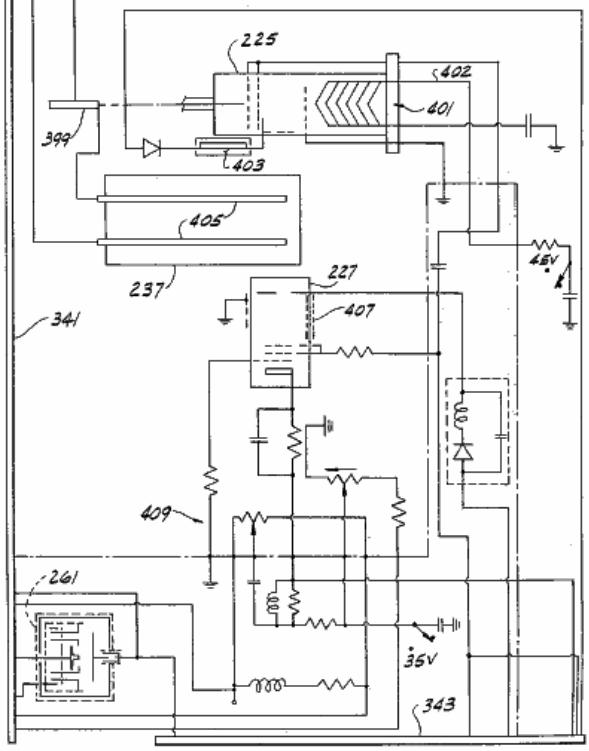

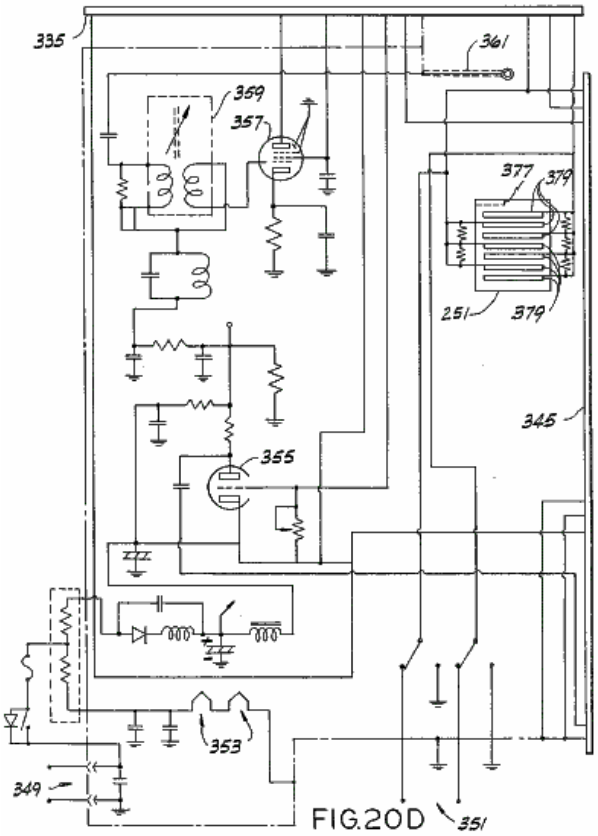

FIG. 20D

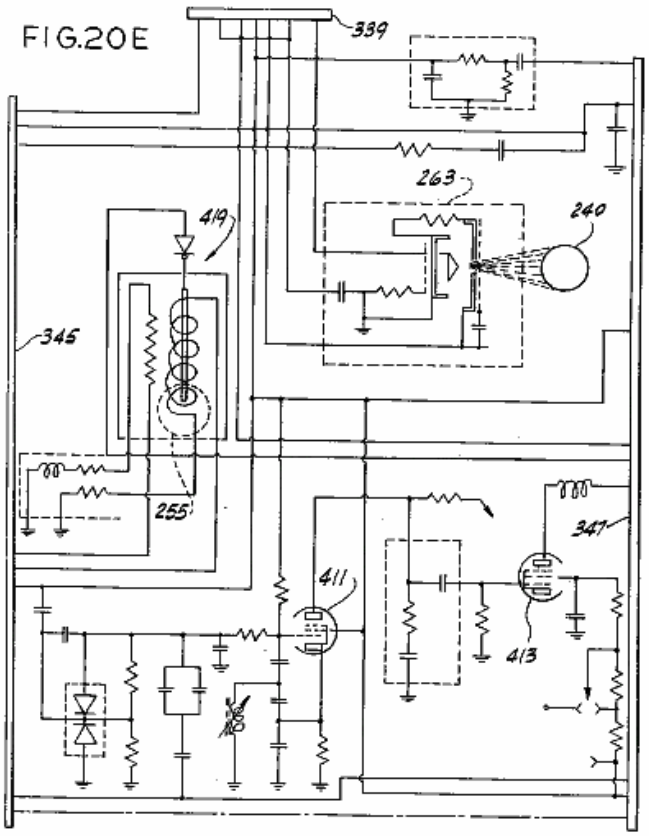

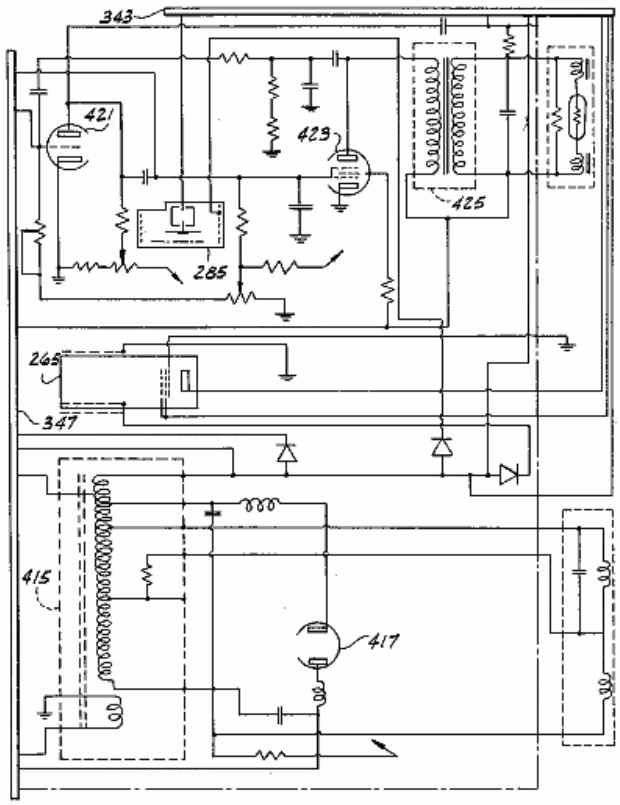

FIG. 20F

Note: Corresponding reference characters indicate corresponding parts throughout all of the views of the drawings.

DESCRIPTION OF A PREFERRED EMBODIMENT

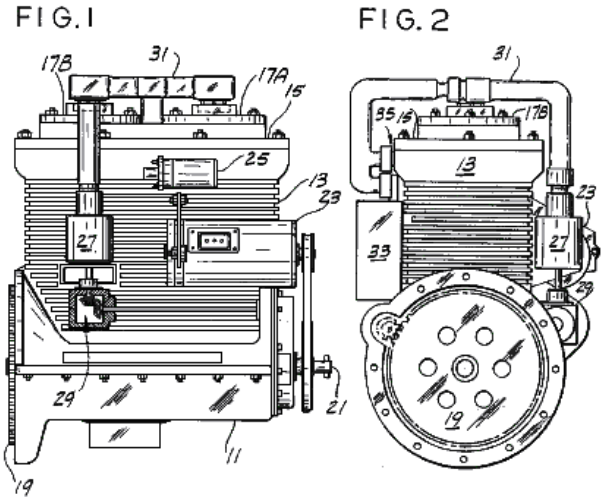

Referring to the drawings, there is shown in **Fig.1** a two-cylinder engine **11** comprising a block **13** preferably of a nonmagnetic material such as aluminium, a nonmagnetic head **15**, and a pair of cylinder heads **17A** and **17B** of a magnetisable material such as 0.1-0.3% carbon steel. Also shown in **Fig.1** is a flywheel **19** attached to a crankshaft **21**, a generator **23**, a high-voltage coil **25**, a distributor **27** attached by a gear arrangement shown in part at **29** to the crankshaft, and an electrical cable **31** which is connected to the distributor and to both cylinders. Cable **31** (see **Fig.2**) is also electrically connected to a switching unit **33** which preferably comprises a plurality of silicon controlled rectifiers (SCRs) or transistors. Also shown in **Fig.2** is a second electrical connection of the cable to the cylinders, which connection is indicated generally at **35**. Turning to **Fig.3**, there is shown a starter motor **37** as well as a clearer view of the connections **35** to each cylinder.

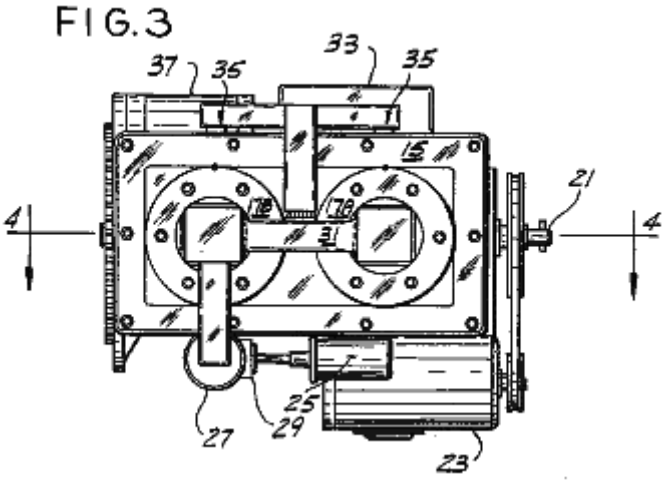

A cross section of the engine is shown in **Fig.4**. The cylinder heads have associated with them, pistons marked **39A** and **39B**, respectively, the heads and pistons define opposite ends of a pair of chambers or cylinders **41A** and **41B** respectively. The pistons are made of a magnetisable material. Although only two chambers are shown, the engine can include any number. It is preferred, however, for reasons set forth below, that there be an even number of cylinders. Pistons **39A** and **39B** move axially with respect to their corresponding heads from a first position (the position of piston **39A** in **Fig.4**) to a second position (the position of piston **39B**) and back, each piston being suitably connected to crankshaft **21**. As shown in **Fig.4**, this suitable connection can include a connecting rod **CR**, a wrist pin **WP**, and a lower piston portion or power piston **LP**. The connecting rods and/or power pistons must be of non-magnetisable material. When a split piston is used, pistons **39A** and **39B** are suitably connected to lower piston portions **LP** by bolting, spring-loaded press fitting, or the like. Pistons **39A** and **39B** are attached 180 degrees apart from each other with respect to the crankshaft so that when one piston is at top dead centre (TDC) the other will be at bottom dead centre (BDC) and vice versa. Additional pairs of cylinders may be added as desired but the pistons of each pair should be attached to the crankshaft 180 degrees from each other. Of course, the relative position of each piston with respect to its respective head determines the volume of its chamber.

FIG. 4

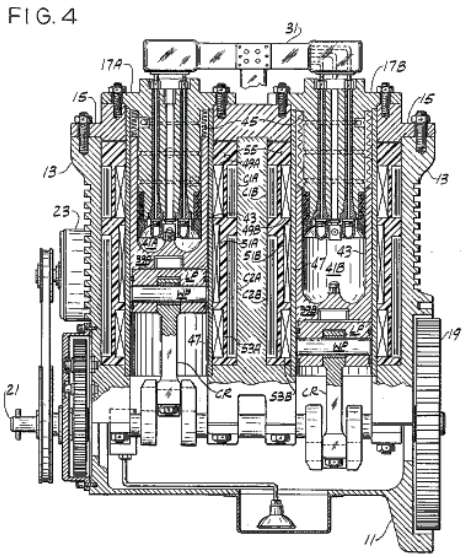

Integral with the piston bodies are walls **43** which form the walls of the chambers. Preferably, a set of air-tight bellows **45**, of similar construction to that sold under the designation ME 197-0009-001 by the Belfab Company of Daytona Beach, Fla., are suitably secured between walls **43** and cylinder heads **17A** and **17B** respectively to form an airtight seal between each piston and its cylinder head. While walls **43** and piston **39** can be made of one magnetisable piece, a preferable and more efficient construction has walls **43** separate from piston **39** and made of a non-magnetisable material. The length of time that a given engine will run is a function of the efficacy of its sealing system. Means, such as bellows **45**, for hermetically sealing the cylinders will optimise said length of time. Such a hermetic seal should be secured between walls **43** and cylinder heads **17** to form an airtight seal between them. This seal could be the airtight bellows system shown or some other sealing system such as an oil sealing system.

Cylinder bodies **47** (see **Fig.4**), made of nonmagnetic material such as stainless steel, extend from the point of attachment of each bellows to its cylinder head to the base of the corresponding pistons, forming sleeves for each piston in which each piston moves. Three sets of electric coils **49A, 49B, 51A, 51B**, and **53A, 53B**, are wound around sleeves **47**, and hence around chambers **41A** and **41B**, respectively, for generating magnetic fields in the chambers, those coils being generally coaxial with their respective chambers. Each of these coils has an inductance of approximately 100 mH. It is preferred that 14-19 gauge wire be used to wind these coils and that the coils be coated with a suitable coating, such as #9615 hardener from Furane Plastics, Inc., of Los Angeles, California, or the coating sold by the Epoxylite Corp. of South El Monte, California under the trade designation Epoxylite 8683. Each chamber is also surrounded by a pair of capacitors, **C1A**, **C1B** and **C2A, C2B** wound around it, capacitors **C1A**, **C1B** having a capacitance of approximately 1.3 microfarads and capacitors **C2A, C2B** having a capacitance of approximately 2.2 microfarads. The coils and capacitors are potted in hardened epoxy of fibreglass material **55**. The epoxy resin and hardener sold under the designations EPI Bond 121 and #9615 hardener by Furane Plastics, supra, are satisfactory, but other epoxy material which will remain stable at temperatures up to 200 degrees F would probably also be acceptable. It is preferred that a small amount of graphite such as that sold under the trade designation Asbury 225 by Asbury Graphite, Inc. of Rodeo, Calif., be included in the epoxy potting to prevent nuclear particles formed in the chamber from escaping from the apparatus. Ten to 15% graphite to epoxy by weight is more than enough.

FIG.5

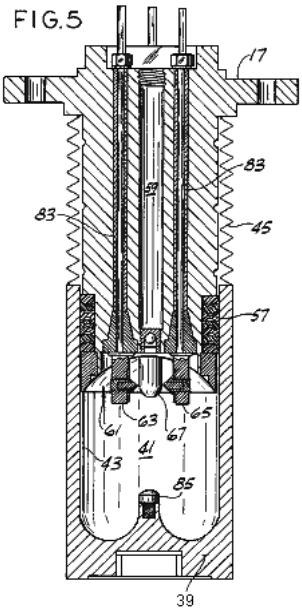

A typical cylinder is shown in section in **Fig.5**, showing the piston in its fully extended position with respect to the head and showing many details on a somewhat larger scale than that of **Fig.4**. A set of seals **57**, made of a material such as that sold under the trade designation Teflon by the DuPont Company of Delaware, is positioned between the cylinder head and wall **43** to prevent escape of the working fluid from chamber **41**. A filler tube **59** with a ball valve at its lower end is used in filling the chamber with the working fluid but is closed during operation of the engine.

The cylinder head has a generally concave depression therein, indicated at **61**, which defines the top end of the chamber. A plurality of electrodes for exciting and igniting the working fluid extend through the cylinder head into the chamber. Two of those electrodes, shown in section in **Fig.5** and labelled **63** and **65**, have tungsten points **75**, while the other two, labelled **67** and **69** (see **Fig.6** for electrode **69**) are containers called, respectively, the anode and the cathode. The electrodes are generally equidistantly spaced from the axes of their chambers and are generally coplanar to each other, their mutual plane being perpendicular to the axes of their chambers. Each electrode is positioned 90 degrees from adjacent electrodes in this embodiment and are generally positioned so that a line from the anode to the cathode and a line between the other two electrodes intersect at a focal point generally on the axis of the chamber. The radial distance of each electrode from the focal point is fixed for a reason discussed below. The general construction of electrodes **63** and **65** is shown in **Fig.6** to **Fig.9**. These electrodes include a conductive rod **71** (see **Fig.7**) preferably of brass or copper; a conductive, generally rectangular plate **73** (see **Fig.6**, **Fig.8** and **Fig.9**); and tungsten point **75** mounted in a conductive base **77** generally at right angles to the plate (see **Fig.8** and **Fig.9**).

FIG.10

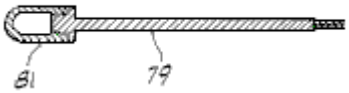

The construction of the anode and cathode is shown in **Fig.10**. Each includes a conductive rod **79** and a container **81**. The cathode container is substantially pure aluminium. If desired, aluminium alloys with, e.g., less than 5% copper, 1% manganese and 2% magnesium may be used. In one embodiment, the cathode container contains approximately four grams of thorium-232 and is filled with argon. In this same embodiment the anode container is copper or brass and contains approximately two grams of rubidium-37 and approximately three grams of phosphorus-15 hermetically sealed in mineral oil. In a second embodiment, the cathode is still aluminium, but it contains at least two grams of rubidium-37 in addition to the approximately four grams of thorium-232 in either argon or mineral oil. In this second embodiment, the anode is also aluminium and contains at least 4 grams of phosphorus-15 and at least 2 grams of thorium-232 in argon or mineral oil. Alternatively, mesothorium may be used for the thorium, strontium-38 may be used for the rubidium, and sulphur-16 may be used for the phosphorus. Rods **71** and **79** extend through cylinder head **17** to the exterior where electrical connections are made to the electrodes. Each rod is surrounded by one of four insulating sleeves **83**, the lower portion of each of which being flared outwards to seat firmly in the cylinder head.

FIG.11

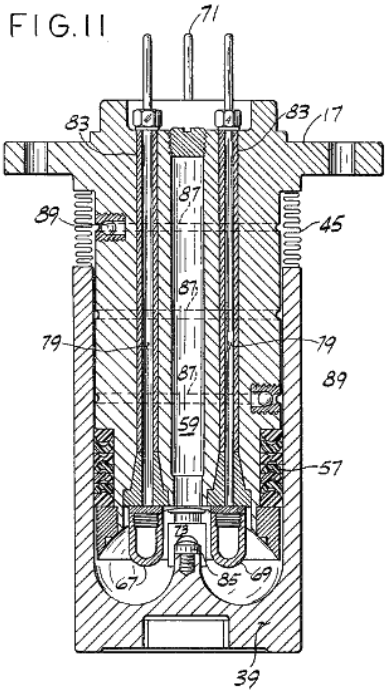

The piston has a generally semi-toroidal depression in its upper surface (see **Fig.4**, **Fig.5** and **Fig.11**) and carries a conductive discharge point **85** of copper, brass or bronze generally along the axis of the chamber. When the piston is generally extended, the discharge point is a substantial distance from the electrodes. But when the piston is in its upper position (see **Fig.11**), the discharge point is positioned generally between all four electrodes and close to them, there being gaps between the electrodes and the discharge point. When the piston is in this upper position, the electrodes extend somewhat into the semi-toroidal depression in the piston's upper surface and the chamber is generally toroidal in shape. The volume of the chamber shown in **Fig.11** can be from approximately 6.0 cubic inches (100 cc) or larger. Given the present state of the art, 1500 cubic inches (25,000 cc) appears to be the upper limit. A plurality of ports **87** and one-way valves **89** return working fluid which escapes from the chamber back into it, so long as a sealing system such as bellows **45** is used.

An alternative cylinder head/piston arrangement is shown in **Fig.12**. The main difference between this arrangement and that of **Fig.5** is that the chamber walls, here labelled **43'** are integrally formed with the head. As a result seals **57** are carried by the piston rather than by the head, the attachment of bellows **45** is somewhat different, and the fluid-returning valves and ports are part of the piston rather than of the head. Otherwise these arrangements are substantially the same. Preferably, the cylinders of both arrangements are hermetically sealed.

FIG.12A

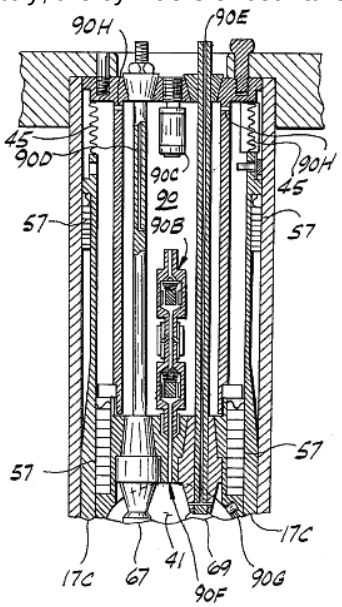

An additional embodiment of a cylinder head/piston arrangement used in the present invention is shown in **Fig.12A**. In this arrangement, a tapered sleeve **17C** mates between cylinder head **17** and piston **39**, a plurality of seals **57** are provided, and electrodes **67** and **69** have a somewhat different shape. Also, in this embodiment, a chamber **90** is provided in cylinder head **17** for storing additional working fluid, i.e., the purpose of chamber **90** is to extend the operating time between refuelling by circulating the working fluid, viz. the mixture of inert gases

described, between cylinder **41** and chamber **90** as needed so that the reactions in cylinder 41 are not adversely affected. To accomplish this, this embodiment further includes a two-way circulation valve **90B**, a relief valve **90C**, and duct or passageway **90D** for evacuating and filling chamber **90**, a duct or passageway **90E** for evacuating and filling cylinder **41**, a passageway **90F** between chamber **90** and cylinder **41** in which two-way valve **90B** is disposed, a sensor **90G** and a plurality of small pressure relief holes **90H**. Relief holes **90H** serve to relieve the pressure on bellows **45** as the piston moves from BDC to TDC.

In larger engines holes **90H** should be replaced with one way valves. Two-way valve **90B** is either controlled by sensor **90G** or is manually operated, as desired, to allow the circulation of gases between chamber **90** and cylinder **41**. The sensor itself detects a condition requiring the opening or closing of valve **90B** and signals that condition to the valve. For example, sensor **90G** can measure pressure in cylinder **41** while the piston is at top dead centre. A predetermined cylinder pressure can cause a spring to compress, causing the valve to open or close as appropriate. A subsequent change in the cylinder pressure would then cause another change in the valve. Another sensor (not shown) could measure the physical location of the piston by a physical trip switch or an electric eye, or it could measure angular distance from top dead centre on the distributor or the crankshaft. The sensor must keep the gas pressure in chamber **90** at one atmosphere, plus or minus 5%, and at top dead centre, cylinder **41** should also be at that pressure. If gas is lost from the system, it is more important to maintain the proper pressure in cylinder **41**. Alternatively, a small passage between cylinder **41** and chamber **90** could function in a passive manner to satisfactorily accomplish the same result. From the above, it can be seen that this embodiment utilises the hollowed out centre of the cylinder head for storing additional working fluid, which fluid is circulated between chamber **90** and cylinder **41** through a valve system comprising valve **90B** and sensor **90G** with the moving piston causing the gases to circulate.

The electrical circuitry for engine **11** includes (see **Fig.13A**) a 24 V battery **B1**, an ignition switch **SW1**, a starter switch **SW2**, starter motor **37**, a main circuit switch **SW4**, a step-down transformer **93** (e.g., a 24 V to 3.5 V transformer), a switch **SW6** for supplying power to ignition coil **25** (shown in **Fig.13A** and **Fig.13B** as two separate ignition coils **25A** and **25B**), and various decoupling diodes.

The circuitry of **Fig.13A** also includes a high frequency voltage source or oscillator **95** for supplying rapidly varying voltage through two electronic current regulators **97A, 97B** (see **Fig.13B** for regulator **97B**) to the anode and cathode electrodes of each cylinder, and a high-voltage distributor **99** for distributing 40,000 volt pulses to the cylinders. Distributor **99** has two wipers **99A** and **99B** and supplies three pulses to each cylinder per cycle. Wipers **99A** and **99B** are 180 degrees out of phase with each other and each operates to supply pulses to its respective cylinder from TDC to 120 degrees thereafter. More pulses are desirable and therefore a better distributor arrangement (shown in **Fig.14**) may be used. The arrangement shown in **Fig.14** includes two ignition coils **101**, **103**, a simple distributor **105** and a pair of magnetic ignition circuits **107** and **109**, described below. Of course many other ignition systems could also be developed. For example, a single circuit might be used in place of circuits **107**, **109**, additional induction coils might be added to the ignition coils to assist in starting or a resistor could be added to the ignition coils to ensure a constant 40,000 volt output regardless of engine rpm. Also, a solid-state distributor could be used instead of the mechanical distributor labelled **99**.

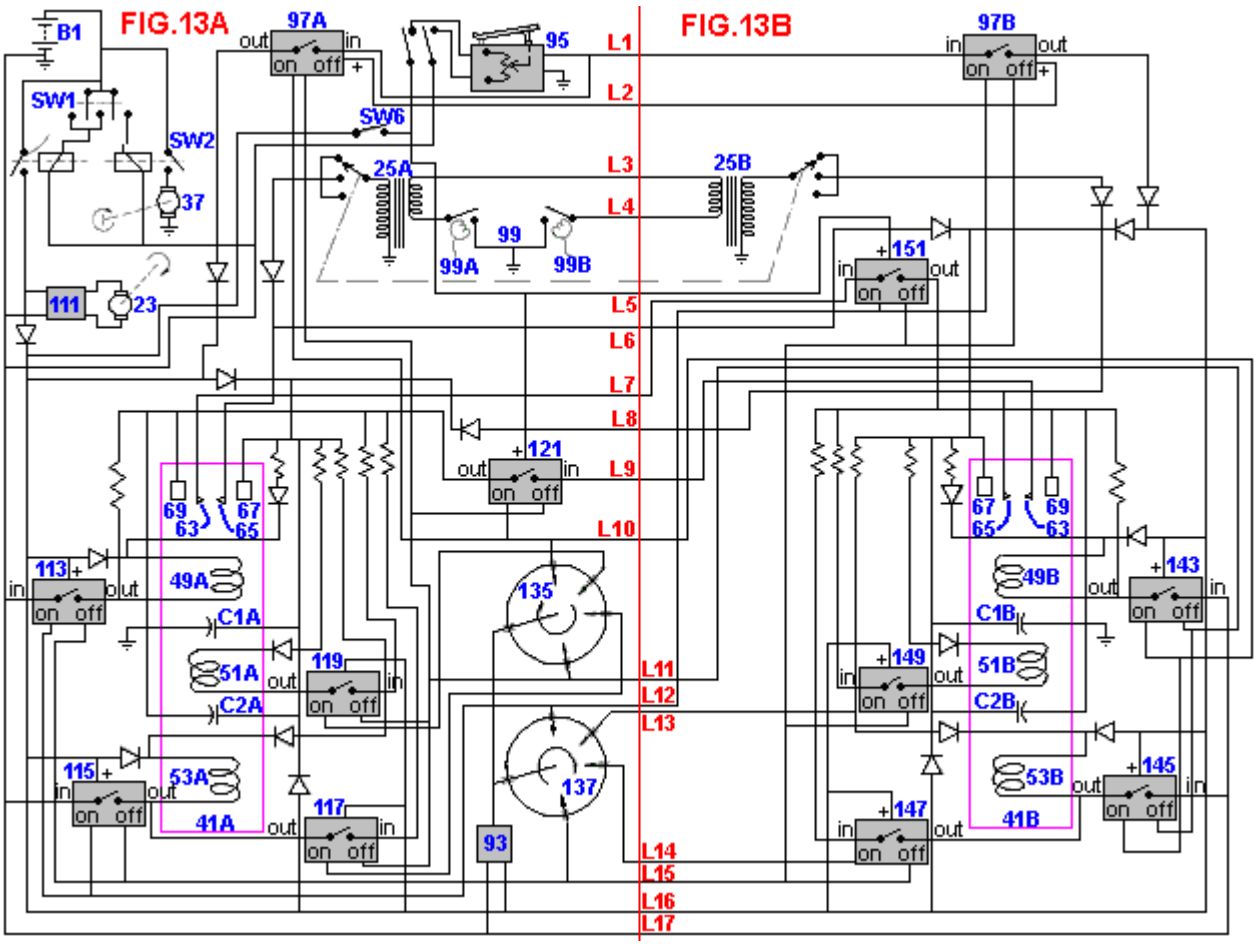

Referring back to **Fig.13A**, for engines of more than 1000 hp a high frequency source **95** could be used to control engine RPM. The output frequency is controlled by a foot pedal similar to an accelerator pedal in a conventional vehicle. The output frequency varies through a range of from approximately 2.057 MHz to approximately 27.120 MHz with an output current of approximately 8.4 amps. The speed of engine **11** is controlled by the output frequency of source **95**. The high frequency current, as described below, is directed to each cylinder in turn by circuitry described below. For engines producing from 300 to 1000 hp (not shown), a high frequency source having a constant output of 27.120 MHz with a constant current of 3.4 amps which is continually supplied to all cylinders could be used. In this case an autotransformer, such as that sold under the trade designation Variac by the General Radio Company, controlled by a foot pedal varies the voltage to each cylinder from 5 to 24 volts DC at 4.5 amps, using power from the batteries or the alternator. The DC current from the Variac is switched from cylinder to cylinder by two small electronic switching units which in turn are controlled by larger electronic switching units. For the smallest engines (not shown), a high frequency generator could supply a constant output of 27.120 MHz with a constant current of 4.2 amps to the cylinders during starting only. Speed control would be achieved by a Variac as described above which controls the DC voltage supplied to the cylinders in turn within a range of from 5 to 24 volts at a current of 5.2 amps. In this case, once the engine is running, the full voltage needed to ignite the (smaller) quantity of gases is obtained from the electrodes in the other cylinder of the pair.

The circuitry of **Fig.13A** also includes the generator, a voltage regulator and relay **111**, five electronic switching units **113, 115, 117, 119** and **121**, electrodes **63** and **65** associated with chamber **41A** (hereinafter chamber **41A** is sometimes referred to as the "**A**" cylinder and chamber **41B** is sometimes referred to as the "**B**" cylinder), anode **67**, cathode **69**, magnetic coils **49A, 51A** and **53A**, capacitors **C1A** and **C2A**, and various decoupling diodes. The electronic switching units can take a variety of forms. For example, one simple form (see **Fig.15**) includes a pair of SCRs **123** and **125**. The switching unit is connected at terminal IN to the corresponding line on the input side and at terminal OUT to the corresponding line on the output side. When a voltage of 3.5 volts is supplied from the battery through a distributor, for example, to the ON terminal, SCR **125** conducts, thereby completing a circuit through the switching unit. Conversely, when 3.5 volts is applied to the OFF terminal, SCR **123** conducts and the circuit is broken. Likewise, the circuit for regulators **97A** and **97B** (see **Fig.16**) includes two SCRs **127** and **129** and a PNP transistor **131**. In this circuit when SCR **127** is gated on, it forces transistor **131** into conduction, thereby completing the circuit through the regulator. When SCR **129** is gated on, the circuit through transistor **131** is broken. A number of other configurations may be used in place of those of **Fig.15** and **Fig.16** and not all would use SCRs. For example, one triode could be used to replace two main SCRs, or transistors could be used instead of SCRs.

A pair of low-voltage distributors **135** and **137** are also shown in **Fig.13A**. Distributors **135** and **137** provide gating pulses for the electronic switching units of **Fig.13A** and **Fig.13B**. Of course, solid-state distributors could also replace mechanical distributors **135** and **137**.

In addition, the engine circuitry includes (see **Fig.13B**) five electronic switching units **143, 145, 147, 149** and **151** corresponding to units **113, 115, 117, 119** and **121** of **Fig.13A**, electrodes **63** and **65** of the "**B**" cylinder, anode **67**, cathode **69**, electric coils **49B, 51B** and **53B**, capacitors **C1B** and **C2B**, and various decoupling diodes. The circuitry of **Fig.13B** is generally the same as the corresponding portions of **Fig.13A**, so the description of one for the most part applies to both. Of course, if more than two cylinders are used, each pair of cylinders would have associated with them, circuitry such as that shown in **Fig.13A** and **Fig.13B**. The circuitry of **Fig.13A** is connected to that of **Fig.13B** by the lines **L1-L17**.

The working fluid and the fuel for the engine are one and the same and consist of a mixture of inert gases, which mixture consists essentially of helium, neon, argon, krypton and xenon. It is preferred that the mixture contain 35.6% helium, 26.3% neon, 16.9% argon, 12.7% krypton, and 8.5% xenon by volume, it having been calculated that this particular mixture gives the maximum operation time without refuelling. Generally, the initial mixture may contain, by volume, approximately 36% helium, approximately 26% neon, approximately 17% argon, approximately 13% krypton, and approximately 8% xenon. This mixture results from a calculation that equalises the total charge for each of the gases used after compensating for the fact that one inert gas, viz. radon, is not used. The foregoing is confirmed by a spectroscopic flashing, described below, that occurs during the mixing process. If one of the gases in the mixture has less than the prescribed percentage, it will become over-excited. Similarly, if one of the gases has more than the prescribed percentage, that gas will be under-excited. These percentages do not vary with the size of the cylinder.

Operation of the engine is as follows: At room temperature, each cylinder is filled with a one atmosphere charge of the fuel mixture of approximately 6 cubic inches (100 cc) /cylinder (in the case of the smallest engine) by means of filler tube **59**. The filler tubes are then plugged and the cylinders are installed in the engine as shown in **Fig.4**, one piston being in the fully extended position and the other being in the fully retracted position. To start the engine, the ignition and starter switches are closed, as is switch **SW6**. This causes the starter motor to crank the engine, which in turn causes the wiper arms of the distributors to rotate. The starting process begins, for example, when the pistons are in the positions shown in **Fig.4**. Ignition coil **25** and distributor **99** (see **Fig.13A**) generate a 40,000 volt pulse which is supplied to electrode **65** of chamber **41A**. Therefore, a momentary high potential exists between electrodes **63** and **65** and the plates on each. The discharge point on piston **39A** is adjacent these electrodes at this time and sparks occur between one or more of the electrodes and the discharge point to partially excite, e.g. ionise, the gaseous fuel mixture.

The gaseous fuel mixture in cylinder **41A** is further excited by magnetic fields set up in the chamber by coil **49A**. This coil is connected to the output side of electronic switching unit **121** and, through switching unit **113**, to the battery and the generator. At this time, i.e., between approximately 5 degrees before TDC and TDC, distributor **135** is supplying a gating signal to unit **121**. Any current present on the input side of unit **121**, therefore, passes through unit **121** to energise coil **49A**. Moreover, high frequency current from oscillator **95** is supplied via regulator **97A** to coil **49A**. This current passes through regulator and relay **97A** because the gating signal supplied from distributor **135** to unit **121** is also supplied to relay **97A**. The current from switching unit **121** and from oscillator **95** also is supplied to the anode and the cathode. It is calculated that this causes radioactive rays (x-rays) to flow between the anode and the cathode, thereby further exciting the gaseous mixture.

As the starter motor continues cranking, piston **39A** begins moving downward, piston **39B** begins moving upward, and the wiper arms of the distributors rotate. (Needless to say, a solid-state distributor would not rotate. The distributor could utilise photo cells, either light or reflected light, rather than contact points). After 45 degrees of rotation, distributor **135** supplies a gating pulse to electronic switching unit **119**, thereby completing a circuit through unit **119**. The input to unit **119** is connected to the same lines that supply current to coil **49A**. The completion of the circuit through unit **119**, therefore, causes coil **51A** to be energised in the same manner as coil **49A**. After an additional 45 degrees of rotation, distributor **135** gates on electronic switching unit **117** which completes a circuit to the same lines. The output terminal of unit **117** is connected to coil **53A**, and so this coil is energised when unit **117** is gated on. All three coils of the "**A**" cylinder remain energised and, therefore, generating magnetic fields in chamber **41A** until piston **39A** reaches BDC.

As piston **39A** moves from TDC to BDC, two additional 40,000 volt pulses (for a total of three) are supplied from distributor **99** to the "**A**" cylinder. These pulses are spaced approximately 60 degrees apart. If more pulses are desired, the apparatus shown in **Fig.14** may be used. In that case, the solenoids indicated generally at **107A, 107B** and **109A, 109B** are energised to create a number of rapid, high-voltage pulses which are supplied as indicated in **Fig.14** to the cylinders, distributor **105** operating to supply pulses to only one of the pair of cylinders at a time.

As piston **39A** reaches BDC, distributor **135** sends a pulse to the OFF terminals of electronic switching units **121, 117** and **119**, respectively, causing all three coils **49A, 51A** and **53A** to be de-energised. At about the same time, i.e., between approximately 5 degrees before TDC and TDC for piston **39B**, distributor **137** supplies a gating pulse to the ON terminals of electronic switching units **113** and **115**. The power inputs to units **113** and **115** come from the generator through regulator **111** and from the battery, and the outputs are directly connected to coils **49A** and **53A**. Therefore, when units **113** and **115** are gated on, coils **49A** and **53A** are reenergised. But in this part of the cycle, the coils are energised with the opposite polarity, causing a reversal in the magnetic field in chamber **41A**. Note that coil **51A** is not energised at all during this portion of the cycle. Capacitors **C1A** and **C2A** are also charged during the BDC to TDC portion of the cycle. (During the TDC to BDC portion of the cycle, these capacitors are charged and/or discharged by the same currents as are supplied to the anode and cathode since they are directly connected to them).

As piston **39A** moves upwards, electrodes **63** and **65** serve as pick-up points in order to conduct some of the current out of chamber **41A**, this current being generated by the excited gases in the chamber. This current is transferred via line **L7** to electronic switching unit **151**. The same gating pulse which gated on units **113** and **115** was also supplied from distributor **137** via line **L12** to gate on switching unit **151**, so the current from the electrodes of chamber **41A** passes through unit **151** to the anode, cathode and capacitors of chamber **41B**, as well as through switching units **147** and **149** to coils **49B, 51B** and **53B**. Thus it can be seen that electricity generated in one cylinder during a portion of the cycle is transferred to the other cylinder to assist in the excitation of the gaseous mixture in the latter. Note that this electricity is regulated to maintain a constant in-engine current. It should be noted, that twenty four volts from the generator is always present on electrodes **63** and **65** during operation to provide for pre-excitement of the gases.

From the above it can be seen that distributors **135** and **137** in conjunction with electronic switching units **113, 115, 117, 119, 121, 143, 145, 147, 149** and **151** constitute the means for individually energising coils **49A**, **49B, 51A, 51B, 53A** and **53B**. More particularly, they constitute the means to energise all the coils of a given cylinder from the other cylinder when the first cylinder's piston is moving from TDC to BDC and operate to energise only two (i.e., less than all) of the coils from the alternator when that piston is moving from BDC to TDC. Additionally, these components constitute the means for energising the coils with a given polarity when the piston of that cylinder is moving from TDC to BDC and for energising the first and third coils with the opposite polarity when that piston is moving from BDC to TDC.

As can also be seen, switching units **121** and **151** together with distributors **135** and **137** constitute the means for closing a circuit for flow of current from chamber **41A** to chamber **41B** during the BDC to TDC portion of the cycle of chamber **41A** and for closing a circuit for flow of current from chamber **41B** to chamber **41A** during the TDC to BDC portion of the cycle of chamber **41A**. Oscillator **95** constitutes the means for supplying a time varying electrical voltage to the electrodes of each cylinder, and oscillator **95**, distributors **135** and **137**, and regulators **97A** and **97B** together constitute the means for supplying the time varying voltage during a predetermined portion of the cycle of each piston. Moreover, distributor **99** together with ignition coils **25A** and **25B** constitute the means for supplying high-voltage pulses to the cylinders at predetermined times during the cycle of each piston.

The cycle of piston **39B** is exactly the same as that of piston **39A** except for the 180 degree phase difference. For each cylinder, it is calculated that the excitation as described above causes the gases to separate into layers, the lowest atomic weight gas in the mixture, namely helium, being disposed generally in the centre of each chamber, neon forming the next layer, and so on until we reach xenon which is in physical contact with the chamber walls. The input current (power) to do this is the calculated potential of the gas mixture. Since helium is located in the centre of the chamber, the focal point of the electrode discharges and the discharges between the anode and cathode is in the helium layer when the piston is near TDC. As the piston moves slightly below TDC, the electrons from electrodes **63** and **65** will no longer strike the tip of the piston, but rather will intersect in the centre of the cylinder (this is called "focal point electron and particle collision") as will the alpha, beta and gamma rays from the anode and cathode. Of course, the helium is in this exact spot and is heavily ionised at that time. Thus the electrodes together with the source of electrical power connected thereto constitute the means for ionising the inert gas.

It is calculated that as a result of all the aforementioned interactions, an ignition discharge occurs in which the helium splits into hydrogen in a volume not larger than 2 or 3 x 10^{-6} cubic millimetres at a temperature of approximately 100,000,000 degrees F. Of course this temperature is confined to a very small space and the layering of the gases insulates the cylinder walls from it. Such heat excites the adjacent helium so that a plasma occurs. Consequently, there is a minute fusion reaction in the helium consisting of the energy conversion of a single helium atom, which releases sufficient energy to drive the piston in that chamber toward BDC with a force similar in magnitude to that generated in a cylinder of a conventional internal combustion engine. Electrodes **63** and **65** extend into the argon layer while each piston is in its BDC to TDC stroke so as to pick up some of the

current flowing in that layer. It may take a cycle or two for the gases in the cylinders to become sufficiently excited for ignition to occur.

Once ignition does occur, the electrical operation of the engine continues as before, without the operation of the starter motor. Distributor **99** supplies three pulses per cycle (or more if the magnetic ignition system of **Fig.14** is used) to each cylinder; and distributors **135** and **137** continue to supply "on" and "off" gating pulses to the electronic switching units. The rpm of the engine is, as explained above, governed by the frequency of the current from oscillator **95** (or in the case of smaller horsepower units, by the DC voltage supplied to the cylinders from the Variac).

Because of the minute amount of fuel consumed in each cycle, it is calculated that a cylinder can run at 1200 rpm approximately 1000 hours, if not more, on a single charge of gas. Note that even at 1200 rpm, there will be intense heat occurring only 0.002% of the time. This means that input power need be applied only sporadically. This power can be supplied to a cylinder from the other cylinder of its pair by means of electronic switching units which, in the case of SCRs, are themselves triggered by low voltage (e.g. 3.5 V) current. Thus, since electrical power generated in one cylinder is used to excite the gases in the other cylinder of a pair, it is practical that the cylinders be paired as discussed above. Capacitors are, of course, used to store such energy for use during the proper portion of the cycle of each cylinder.

From the above, it should be appreciated that the engine of this invention has several advantages over presently proposed fusion reactors, such as smaller size, lower energy requirements, etc. But what are the bases of these advantages? For one, presently proposed fusion reactors use hydrogen and its isotopes as a fuel instead of inert gases. Presumably this is because hydrogen requires less excitement power. While this is true, the input power that is required in order to make hydrogen reactors operate makes the excitation power almost insignificant. For example, to keep a hydrogen reactor from short circuiting, the hydrogen gas has to be separated from the reactor walls while it is in the plasma state. This separation is accomplished by the maintenance of a near vacuum in the reactor and by the concentration of the gas in the centre of the reactor (typically a toroid) by a continuous, intense magnetic field. Accordingly, separation requires a large amount of input energy.

In the present invention, on the other hand, the greater excitation energy of the fuel is more than compensated for by the fact that the input energy for operation can be minimised by manipulation of the unique characteristics of the inert gases. First, helium is the inert gas used for fusion in the present invention. The helium is primarily isolated from the walls of the container by the layering of the other inert gases, which layering is caused by the different excitation potential (because of the different atomic weights) of the different inert gases, said excitation being caused by the action of the electrodes, anode and cathode in a magnetic field. This excitation causes the gases each to be excited in inverse proportion to their atomic numbers, the lighter gases being excited correspondingly more. Helium, therefore, forms the central core with the other four gases forming layers, in order, around the helium. The helium is secondarily isolated from the walls of the container by a modest vacuum (in comparison to the vacuum in hydrogen reactors) which is caused partially by the "choking" effect of the coils and partially by the enlargement of the combustion chamber as the piston moves from TDC to BDC. (Unexcited, the gases are at one atmosphere at TDC). Second, argon, the middle gas of the five, is a good electrical conductor and becomes an excellent conductor when (as explained below) it is polarised during the mixing process. By placing the electrodes such that they are in the argon layer, electrical energy can be tapped from one cylinder for use in the other. During a piston's movement from BDC to TDC, the gases are caused to circulate in the cylinder by the change in the polarity of the coils, which occurs at BDC.

During such circulation, the gases remain layered, causing the argon atoms to be relatively close to each other, thereby optimising the conductivity of the argon. This conductivity optimisation is further enhanced by a mild choking effect that is due to the magnetic fields. The circulation of the highly conductive argon results in a continuous cutting of the magnetic lines of force so that the current flows through the electrodes. This production of electricity is similar to the rotating copper wire cutting the magnetic lines of force in a conventional generator except that the rotating copper wire is replaced by the rotating, highly conductive argon. The amount of electricity that can be produced in this manner is a function of how many magnetic field lines are available to be cut. If one of the coils, or all three of the coils or two adjacent coils were energised, there would be only one field with electricity produced at each end. By energising the top and the bottom coil, two separate fields are produced, with electricity produced at four points.

A five coil system, if there were sufficient space, would produce three fields with the top, bottom and middle coils energised. Six points for electricity production would result. The number of coils that can be installed on a given cylinder is a function of space limitations. The recombination of gas atoms during the BDC to TDC phase causes the radiation of electrical energy which also provides a minor portion of the electricity that the electrode picks up. Additional non-grounded electrodes in each cylinder would result in more electricity being tapped off. It should be noted that during the BDC to TDC phase, the anode and the cathode are also in the argon layer and, like the electrodes, they pick up electricity, which charges the capacitors around the cylinder. Third, inert gases remain a

mixture and do not combine because of the completeness of the electron shells. They are therefore well suited to a cycle whereby they are continually organised and reorganised. Fourth, as the helium atoms are consumed, the other gases have the capacity to absorb the charge of the consumed gas so that the total charge of the mixture remains the same.

The second basis of these advantages of the present engine over proposed fusion reactors concerns the fact that hydrogen reactors develop heat which generates steam to turn turbines in order to generate electrical power. This requires tremendous input energy on a continuous basis. The present invention operates on a closed cycle, utilising pistons and a crankshaft which does not require a continuous plasma but rather an infrequent, short duration (10^{-6} second) plasma that therefore requires much less input energy. In the present invention, a plasma lasting longer than 10^{-6} second is not necessary because sufficient pressure is generated in that time to turn the engine. A plasma of longer duration could damage the engine if the heat were sufficiently intense to be transmitted through the inert gas layers to the cylinder walls. A similar heat build-up in the engine can occur if the repetition rate is increased. Such an increase can be used to increase the horsepower per engine size but at the cost of adding a cooling system, using more expensive engine components, and increasing fuel consumption. Note that even though layers of inert gases insulate the cylinder walls, there might be some slight increase in the temperature of the gas layers after a number of cycles, i.e., after a number of ignitions.

Whereas hydrogen fusion reactors cannot directly produce power by driving a piston (because of the required vacuum), the present invention uses the layered inert gases to transmit the power from the plasma to each gas in turn until the power is applied to a piston, which can easily be translated into rotary motion. The layered gases also cushion the piston from the full force of the ignition. Moreover, the fields inside the cylinder undergoing expansion cause the gases to shrink, thereby taking up some of the pressure generated by the explosion and preventing rupturing of the cylinder walls.

Turning now to **Fig.17A** to **Fig.17D**, there is shown apparatus **201** for preparing the fuel mixture for engine **11**. For convenience apparatus **201** is called a mixer although it should be understood that the apparatus not only mixes the gases which form the fuel but also performs many other vital functions as well. The five constituent inert gases are introduced in precise, predetermined proportions. The mixer extracts, filters and neutralises the non-inert gases and other contaminants which may be found in the gas mixture. It also increases the potential capacity of gas atoms, discharges the krypton and xenon gases, polarises the argon gases, ionises the gases in a manner such that the ionisation is maintained until the gas has been utilised and otherwise prepares them for use as a fuel in engine **11**. In particular, the mixer makes the gases easier to excite during operation of the engine. Mixing does not mean an atomic or molecular combination or unification of gases because inert gases cannot chemically combine, in general, due to the completeness of the outer shell of electrons. During mixing, the various gases form a homogeneous mixture. The mixing of the five inert gases in apparatus **201** is somewhat analogous to preparing a five part liquid chemical mixture by titration. In such a mixture, the proportions of the different chemicals are accurately determined by visually observing the end point of each reaction during titration. In apparatus **201**, a visible, spectroscopic flash of light accompanies the desired end point of the introduction of each new gas as it reaches its proper, precalculated proportion. (Each gas has its own distinctive, characteristic, spectroscopic display). The ends points are theoretically calculated and are determined by pre-set voltages on each of a group of ionising heads in the apparatus, as described below.

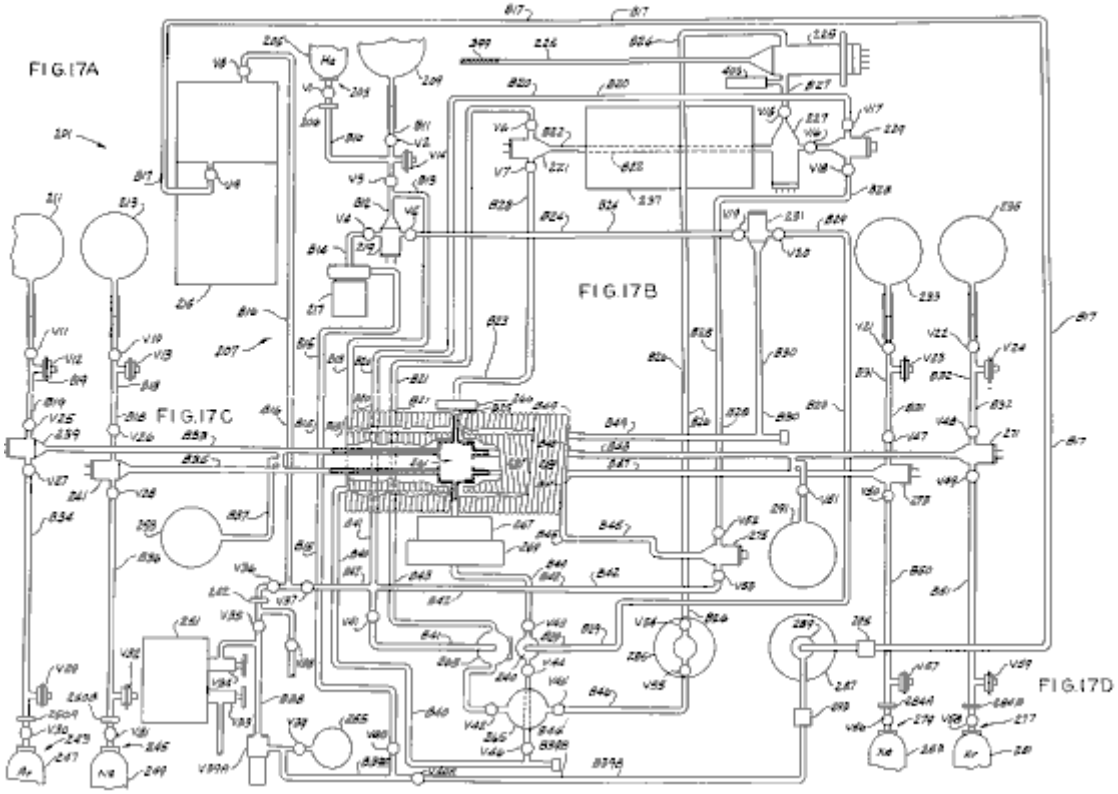

Mixer **201** includes (see **Fig.17A**) an intake port, indicated generally at **203**, which during operation is connected to a source **205** of helium gas, a gauge **206**, glass tubing **207** comprising a plurality of branches **B10-B25** for flow of the gases through the mixer, a plurality of valves **V1-V11** in the branches, which valves may be opened or closed as necessary, three gas reservoirs **209, 211** and **213** for storing small quantities of helium, argon and neon gas respectively, an ionising and filtering unit **215** for filtering undesired non-inert gases and contaminants out of the fuel mixture, for regulating the gas atom electron charge and to absorb the free flowing electrons, a gas flow circulation pump **217**, two ionising heads **219** and **221**, and three quality control and exhaust valves **V12-V14**. The mixer also comprises (see **Fig.17B**) a high frequency discharge tube **225**, a non-directed cathode ray tube **227**, two more ionising heads **229** and **231**, two additional gas reservoirs **233** and **235** for storing small quantities of xenon and krypton, a quadruple magnetic coil **237**, a group of valves **V15-V24**, valves **V23** and **V24** being quality control and exhaust valves, and a plurality of additional glass tubing branches **B26-B32**.

Turning to **Fig.17C**, mixer **201** also includes additional ionising heads **239, 240** and **241**, additional valves **V25-V46**, **V39A** and **V40A**, valves **V29** and **V32** being quality control and exhaust valves and valve **V39A** being a check valve, a vacuum and pressure gauge **242** between valves **V35** and **V36**, tubing branches **B34-B49** (branch **B39** consisting of two parts **B39A** and **B39B**), a pair of intake ports **243** and **245** which during operation are connected to sources **247** and **249** of argon and neon gas respectively, gauges **250A** and **250B**, a spark chamber **251**, a hydrogen and oxygen retention chamber **253** containing No. 650 steel dust in a silk filter, an ion gauge **255** (which can be an RG 75K type Ion Gauge from Glass Instruments, Inc. of Pasadena, Calif.) for removing excess inert gases from the mixture, inner and outer coils of glass tubing **257** and **259** surrounding a mixing chamber **261**, a focused x-ray tube **263** for subjecting the mixture flowing through it to 15-20 millirem alpha radiation and 120-125 millirem beta radiation, a directed cathode ray tube **265**, two twin parallel magnetic coils **266** and **267**, and a focusing magnetic coil **269**. It is important that coils **266** and **267** be immediately adjacent mixing chamber **261**. And (see **Fig.17D**) the mixer also comprises three more ionising heads **271**, **273** and **275**, two entry ports **277** and **279** which during operation are connected to sources **281** and **283** of krypton and xenon respectively, gauges **284A** and **284B**, a high frequency discharge tube **285**, a twin parallel magnetic coil **287** surrounding a polariser **289** for polarising the argon, said polarise containing fine steel particles which are polarised by coils **287** and which in turn polarise argon, a second hydrogen retention chamber **291**, a pair of tubing branches **B50** and **B51**, two filters **293** and **295** and a plurality of valves **V47-V59**, valves **V57** and **V59** being quality control and exhaust valves.

Inner and outer glass tubing coils **257** and **259** and mixing chamber **261** are shown in cross section in **Fig.18**. Intermediate glass coils **257** and **259** are two magnetic coils **297** and **299** having an inductance of approximately 130 mH. A yoke coil **301** is positioned in a semi-circle around mixing chamber **261**. Inside mixing chamber **261** are located a pair of screens **303** and **305**, insulators **307** and **309**, and a pair of spark gaps indicated generally at **311** and **313**. A high frequency amplitude modulated source provides 120 V AC, 60 Hz, 8.4 amp, 560 watt, 27,120 to 40,000 MHz plus or minus 160 KHz current via heavily insulated wires **315** and **317** to the chamber.

These wires are about twelve gauge, like those used as spark plug wires on internal combustion engines. Additionally 95 volt Direct Current is supplied via a smaller (e.g. sixteen to eighteen gauge) insulated wire **319**. As described below, the gases to be mixed and prepared flow through chamber **261** and are suitably treated therein by the action of the various fields present in the chamber.

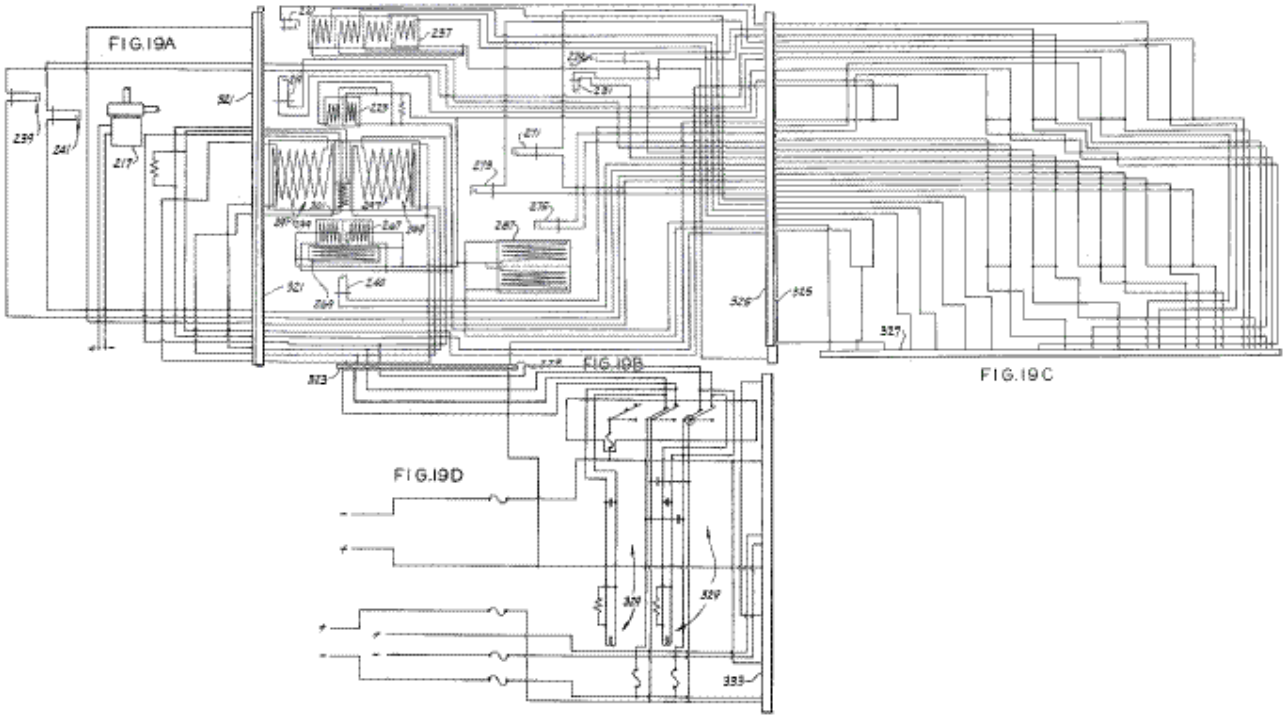

The magnetic coils, ionisation heads, and pump **217**, along with the required electrical interconnections, are schematically shown in **Fig.19A** to **Fig.19E**. More particularly, heads **239** and **241** are shown in **Fig.19A**, as is pump **217**. Each ionising head has two electrodes with a gap between them to cause ionisation of gases flowing through the head, the electrodes being connected to a source of electrical power. Pump **217** is directly connected to a source of power (either AC or DC as required by the particular pump being used). The connections between the circuitry on **Fig.19A** and that on **Fig.19B** are shown as a plug **321**, it being understood that this plug represents a suitable one-to-one connection between the lines of **Fig.19A** and those of **Fig.19B**.

The remaining ionising heads and all the magnetic coils are shown in **Fig.19B**. For clarity, the coils are shown in an unconventional form. Quadruple coil **237** (shown at the top of **Fig.19B**) has one side of each winding connected in common but the other sides are connected to different lines. Coil **223** consists of two windings in parallel. Coils **297** and **299**, the ones around the mixing chamber, are shown overlapping, it being understood that coil **297** is actually interior of coil **299**. Yoke coil **301**, as shown, extends half-way from the bottom to the top of coils **297** and **299**. Twin parallel magnetic coils **267** are connected in parallel with each other, both sides of focusing coil **269** being connected to one node of coils **267**. Likewise coils **287** are connected in parallel. The connections between the lines of **Fig.19B** and those of **Fig.19C** and **Fig.19D** are shown as plugs **323** and **325**, although other suitable one-to-one connections could certainly be made. **Fig.19C** shows the interconnecting lines between **Fig.19B** and **Fig.19E**. A plug **327** or other suitable one-to-one connections connects the lines of **Fig.19C** and **Fig.19E**.

A plurality of power sources, like the above-mentioned Variacs, of suitable voltages and currents as well as a plurality of relays **329**, and plugs **331** are shown on **Fig.19D** and **Fig.19E**. The connections between these two Figures is shown as a plug **333**. It should be appreciated that the Variacs can be adjusted by the operator as necessary to supply the desired voltages to the aforementioned coils and ionising heads. It should also be realised that the desired relays can be closed or opened as needed by connecting or disconnecting the two parts of the corresponding plug **331**. That is, by use of plugs **331**, the operator can control the energising of the ionising heads and magnetic coils as desired. Plugs **331** are also an aid in checking to ensure that each component is in operating condition just prior to its use. Of course, the manipulation of the power sources and the relays need not be performed manually; it could be automated.

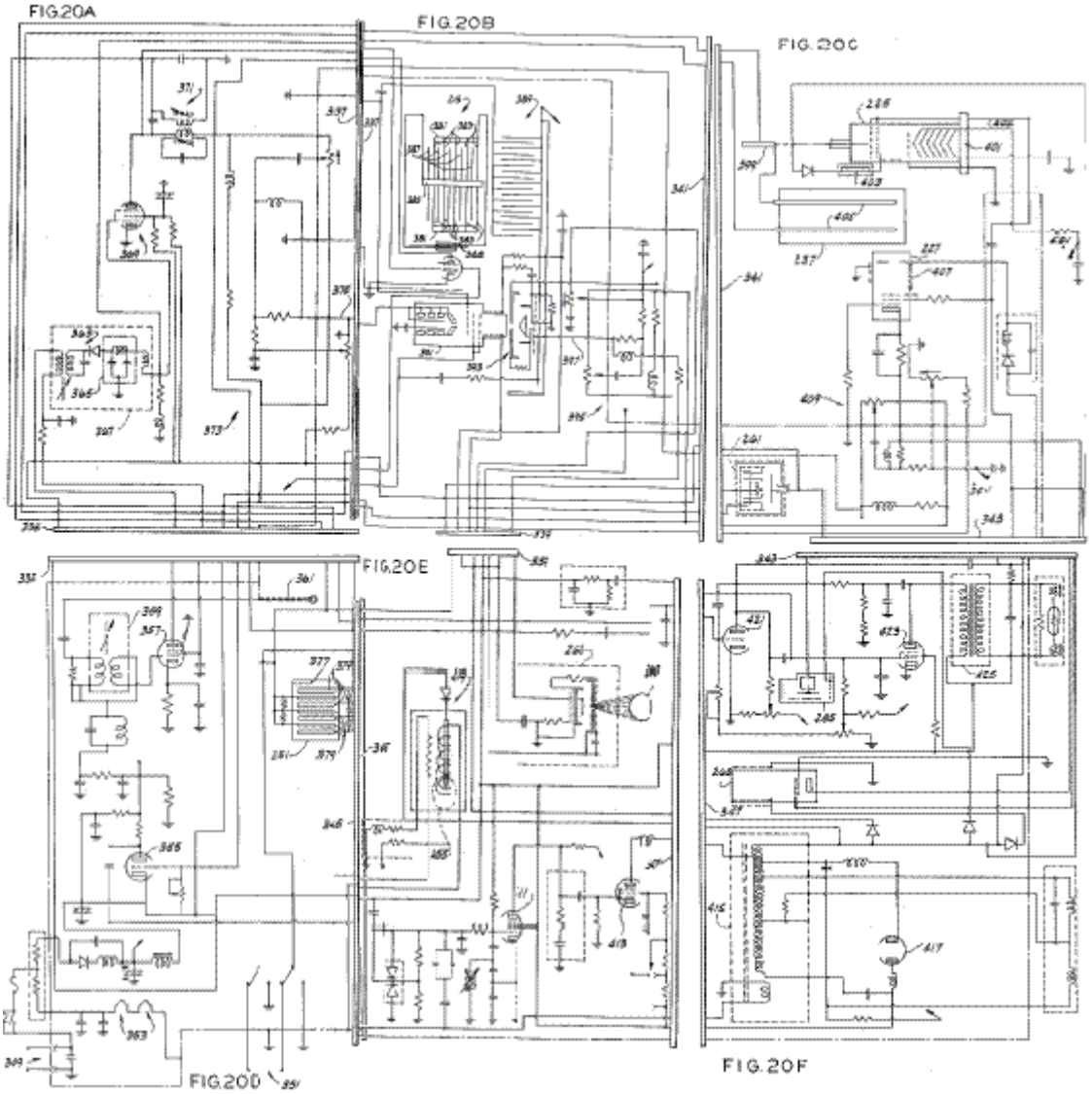

The remaining circuitry for the mixer is shown on **Fig.20A** to **Fig.20F**. For convenience, plugs **335**, **337**, **339, 341, 343, 345** and **347** are shown as connecting the circuitry shown in the various Figures, although other suitable one-to-one connections may be used. The chassis of the apparatus is shown on these Figures in phantom and is grounded. The power supply for the apparatus is shown in part on **Fig.20A** and **Fig.20D** and includes an input **349** (see **Fig.20D**) which is connected to 120 volt, 60 Hz power during operation and an input **351** which is connected to the aforementioned high frequency generator or some other suitable source of approximately 27,120 MHz current. The power supply includes a pair of tuners **353**, numerous RLC circuits, a triode **355**, a pentode **357** with a ZnS screen, a variable transformer **359**, an input control **361**, a second variable transformer **363** (see **Fig.20A**) which together with a filter **365** forms a 2.0 volts (peak-to-peak) power supply **367**, a pentode **369**, a variable transformer **371**, and a resistor network indicated generally at **373**. Exemplary voltages in the power supply during operation are as follows: The anode of triode **355** is at 145 V, the control grid at 135 V and the cathode at -25 V. The voltage at the top of the right-hand winding of transformer **359** is -5 V. The anode of pentode **357** is at 143 V, the top grid is grounded (as is the ZnS screen), the bottom grid is connected to transformer **359**, and the control electrode is at 143 V. The input to supply **367** is 143 volts AC while its output, as stated above, is 2 V (peak-to-peak). The anode of pentode **369** is at 60 V, the grids at -1.5 V, the control electrode at 130 V, and the cathode is substantially at ground. The output of resistor network **373**, labelled **375**, is at 45 V.

Also shown on **Fig.20D** is spark chamber **251**. Spark chamber **251** includes a small amount of thorium, indicated at **377**, and a plurality of parallel brass plates **379**. When the gases in the mixer reach the proper ionisation, the alpha particles emitted by the thorium shown up as flashes of light in the spark chamber.

Turning now to **Fig.20B**, ionising and filtering unit **215** includes a pair of conductive supports **381** for a plurality of conductors **383**, said supports and conductors being connected to a voltage source, an insulating support **385** for additional conductors **387**, and a ZnS screen **388** which emits light when impurities are removed from the gaseous fuel mixture. Unit **215** also includes a second set of interleaved conductors indicated generally at **389**, a

cold-cathode tube **391**, and an x-ray tube indicated generally at **393**. Also shown on **Fig.20B** is an RLC network **395** which has an output on a line **397** which is at 35 V, this voltage being supplied to the x-ray tube.

High frequency discharge tube **255** (see **Fig.20C**) has a conductive electrode **399** at one end to which high frequency current is applied to excite the gases in the mixer, and an electrode/heater arrangement **401** at the other, a voltage of 45 V being applied to an input **402** of the tube. It is desirable that a small quantity of mercury, indicated at **403**, be included in tube **225** to promote discharge of the helium gas. Magnetic coils **237** have disposed therein a pair of generally parallel conductors **405** to which a high frequency signal is applied. When gas flows through coils **237** and between parallel conductors **405**, therefore, it is subjected to the combination of a DC magnetic field from the coil and high frequency waves from the conductors, which conductors act as transmitting antennas. The resulting high frequency magnetic field causes the atoms to become unstable, which allows the engine to change a given atom's quantum level with much less input power than would normally be required. The volume of each gas atom will also be smaller. Also shown on **Fig.20C** is non-directed cathode ray tube **227**. The grids of tube **227** are at 145 V, the control electrode is at ground, while the anode is at 35 V to 80 V (peak-to-peak). The purpose of non-directed cathode ray tube **227** is to add photons to the gas mixture. To generate these photons, tube **227** has a two layer ZnS coating indicated generally at **407**. Chamber **261**, described above, is also shown schematically on **Fig.20C**, along with an RLC network **409**.

The power supply for the mixer (see the lower halves of **Fig.20E** and **Fig.20F**) also includes two pentodes **411** and **413**, a transformer **415**, and a diode tube **417**. The control electrode of pentode **411** is at 5 V to 40 V (peak-to-peak), the grids are at 145 V, the anode is at 100 V, and the cathode is at 8 V to 30 V (peak-to-peak). The control electrode of pentode **413** is at 115 V, while its grids and cathode are at -33 V. The anode of tube **413** is connected to transformer **415**. Also shown on **Fig.20E** are a relay **419** associated with ion gauge **255**, and focused x-ray tube **263** associated with ionisation head **240**. The upper input to tube **263** is at 45 V to 80 V (peak-to-peak).

Turning to **Fig.20F**, there is shown tubes **265** and **285**. Directed cathode ray tube **265** is a pentode connected like tube **227**. High frequency discharge tube **285** includes a phosphor screen and is connected to a high frequency source. Also shown on **Fig.20F** is a triode **421** with its anode at 30 V, its cathode at ground, and its control grid at -60 V; a pentode **423** with its anode at 135 V to 1000 V peak to peak, its cathode at ground, its control electrode at 143 V, its grids at 20 V; and a transformer **425**. It should be understood that various arrangements of electrical components other than those described above could be designed to perform the same functions.

The operation of the mixer is best understood with reference to **Fig.17A** to **Fig.17D** and is as follows: Before and during operation, the mixer, and particularly chamber **261** is kept hermetically sealed and evacuated. To begin the mixing process, helium is admitted into the mixer via intake port **203**. Then a vacuum is again drawn, by a vacuum pump (not shown) connected to valve **V38**, to flush the chamber. This flushing is repeated several times to completely cleanse the tubing branches of the mixer. The mixer is now ready. The ionisation heads next to mixing chamber **261** are connected to a voltage corresponding to approximately 36% of the calculated total ionising voltage, DC current is allowed to flow through magnetic coils **297** and **299** around chamber **261**, and high frequency current is allowed to pass through the mixing chamber. Helium is then slowly admitted, via port **203**, into the mixer. From port **203**, the helium passes through ionisation head **219** into glass tubing coil **259**. This glass coil, being outside magnetic coils **297** and **299**, is in the diverging portion of a magnetic field. The helium slowly flowing through glass coil **259** is gently excited. From coil **259**, the helium flows through branch **B45** to ionisation head **275** and from there, via branch **B28**, to ionisation head **229** (see **Fig.17B**). From head **229**, the gas flows through non-directed cathode ray tube **227** to high-frequency discharger **225**. The high frequency discharger **225**, with heating element, discharges, separates or completely neutralises the charge of any radioactive and/or cosmic particles that are in the helium atom in addition to the protons, neutrons and electrons.

The gas exits discharger **225** via branch **B26** and passes to high-frequency discharger **285**. The high frequency discharger **285**, without heating element, disturbs the frequency of oscillation which binds the gas atoms together. This prepares the helium atoms so that the electrons can more easily be split from the nucleus during the excitation and ignition process in the engine. Discharger **285** includes a phosphorus screen or deposit (similar to the coating on a cathode ray tube) which makes discharges in the tube visible. From discharger **285**, the helium passes through directed cathode ray tube **265** and focused x-ray tube **263**. Directed cathode ray tube **265** produces cathode rays which oscillate back and forth longitudinally underneath and along the gas carrying tube. After that, the helium passes successively through branch **B21**, ionisation head **221**, branch **B23**, twin parallel magnetic coil **266**, and branch **B25** into mixing chamber **261**. Helium flows slowly into and through apparatus **201**. The helium atoms become ionised as a result of excitation by magnetic force, high frequency vibrations and charge acquired from the ionisation heads. When sufficient helium has entered the apparatus, the ionisation energy (which is approximately 36% of the total) is totally absorbed. A spectroscopic flash of light in the mixing

chamber signals that the precise, proper quantity of helium has been allowed to enter. The entry of helium is then immediately halted by the closing of valve **V3**.

The next step in preparing the fuel is to add neon to the mixture. The potential on the relevant ionisation heads, particularly head **241** (see **Fig.17C**), is raised by the addition of approximately 26% which results in a total of approximately 62% of the total calculated potential and valve **V31** is opened, thereby allowing neon to slowly enter the mixer via port **245**. This gas passes through branch **B36**, ionisation head **241**, and branch **B35** directly into the mixing chamber. Since the previously admitted helium is fully charged, the neon absorbs all of the increased ionisation potential. As soon as the neon acquires the additional charge, a spectroscopic flash of light occurs and the operator closes valve **V31**.

In the same manner, the potential on the ionisation heads is increased by the addition of approximately 17% for a total of approximately 79% of the total calculated potential and then valve **V30** is opened to admit argon into the mixer via port **243**. This gas passes through branch **B34**, ionisation head **239**, and branch **B33** into mixing chamber **261**. Again, when the proper amount of argon has been admitted, it emits a spectroscopic flash of light and the operator closes valve **V30**. Next, the potential on the ionisation heads is increased by the addition of approximately 13% to result in a total of approximately 92% of the total calculated potential and valve **V58** (see **Fig.17D**) is opened to admit krypton into the system. The krypton gas passes through branch **B51**, ionisation head **271** and branch **B48** into chamber **261**. Upon the emission of a spectroscopic flash of light by the gas, the operator closes valve **V58**. Finally, the potential on the ionisation heads is increased by the addition of approximately 8% which brings the ionisation potential to the full 100% of the calculated ionisation voltage and valve **V56** is opened to admit xenon into the mixer via port **279**. This gas passes through branch **B50**, ionisation head **273** and branch **B47** to the mixing chamber. When the proper amount of gas has been admitted, a spectroscopic flash of light occurs signalling the operator to close valve **V56**. Note that there are two filter/absorber units, labelled **253** and **291**. Unit **253** is connected to the neon and argon inlet branches **B33** and **B35** while unit **291** is connected to the krypton and xenon inlet branches **B47** and **B48**. These two units absorb hydrogen residue and immobilise the water vapour created when the pump circulates the gases and generates vacuum states.

After all the gases are admitted in the desired proportions, all the valves are closed. (The mixture in the mixing chamber and in the adjacent tubing is at one atmosphere pressure at this time). Once this is done, the interval valves of the system are all opened (but the inlet and outlet valves remain closed) to allow the mixture to circulate throughout the tubing as follows: branch **B44**, magnetic coils **267** and **269**, ionisation head **240**, branch **B29**, ionisation head **231**, branch **B24**, ionisation head **219**, pump **217**, branches **B15** and **B39A**, ionisation gauge **255**, branches **B38** and **B42**, ionisation head **275**, branch **B28**, ionisation head **229**, non-directed cathode ray tube **227**, quadruple magnetic coil **272**, ionisation head **221**, branch **B23**, twin parallel magnetic coil **266**, branch **B25** and mixing chamber **261**. When this circuit is initially opened, the pressure of the mixture drops 40-50% because some of the tubing had previously been under vacuum. Pump **217** is then started to cause the gases to be slowly and evenly mixed.

Because of dead space in the tubing and the reaction time of the operator, it may occur that the proportions of the gases are not exactly those set forth above. This is remedied during the circulation step. As the gas flows through ionisation gauge **255**, excess gas is removed from the mixture so that the correct proportions are obtained. To do this the grid of gauge **255** is subjected to 100% ionisation energy and is heated to approximately 165 degrees F. This temperature of 165 degrees F is related to xenon's boiling point of -165 degrees F in magnitude but is opposite in sign. Xenon is the heaviest of the five inert gases in the mixture. As the gas mixture flows through ionisation gauge **255**, the gas atoms that are in excess of their prescribed percentages are burned out of the mixture and their charge is acquired by the remaining gas atoms from the grid of the ionisation gauge. Because the gases are under a partial vacuum, the ionisation gauge is able to adjust the gas percentages very precisely. (Note: The steps described in the last two paragraphs are repeated if the finished gases are rejected in the final quality control step described below).

The next step involves purifying the mixture so that only the five inert gases remain, absorbing any free electrons and regulating the electrical charge in the mixture. To do this, the circuit consisting of the following components is opened: Branch **B44**, magnetic coil **267**, magnetic coil **269**, ionisation head **240**, branch **B29**, ionisation head **231**, branch **B24**, ionisation head **219**, pump **217**, branches **B15** and **B39**, magnetic coil **287** (see **Fig.17D**) polariser **289**, branch **B17**, ionising and filtering unit **215**, branches **B16**, **B42**, and **B41**, x-ray tube **263**, branch **B21**, ionisation head **221**, branch **B23**, magnetic coil **266**, branch **B25**, and mixing chamber **261**. The gases should complete this circuit at least three times.

The last step required to prepare the mixture for bottling is polarisation of the argon. The circuit required to do this consists of the following components: mixing chamber **261**, branch **B44**, magnetic coil **267**, magnetic coil **269**, ionisation head **240**, cathode ray tube **265**, branch **B40**, tubing coil **257**, branches **B49** and **B30**, ionisation head **231**, branch **B24**, ionisation head **219**, pump **217**, branches **B15** and **B39**, twin parallel magnetic coil **287** (see

Fig.17D), polariser **289**, branch **B17**, ionising and filtering unit **215**, branches **B16**, **B42** and **B20**, ionisation head **229**, cathode ray tube **227**, magnetic coil **237**, ionisation head **221**, branch **B23** and magnetic coil **266**. This too is repeated at least three times. The key to the polarisation of argon is polariser **289** and twin parallel magnetic coil **287** that encircles it. Polariser **289** is a glass bottle which is filled with finely powdered soft iron which can be easily magnetised. The filled bottle is, in effect, the iron core of the coils. The iron particles align themselves with the magnetic lines of force, which lines radiate from the centre toward the north and south poles. The ionised gas mixture is forced through the magnetised iron powder by means of pump pressure and vacuum, thereby polarising the argon gas. Filters **293** and **295** are disposed as shown in order to filter metallic particles out of the gas.

The mixture is now double-checked by means of spark chamber **251** at atmospheric pressure since the fusion reaction in the engine is started at one atmosphere. Because the gases in mixing apparatus **201** are at a partial vacuum, sufficient gases must be pumped into spark chamber **251** to attain atmospheric pressure. To do this valves **V33**, **V36** and **V40A** are closed and circulating pump **217** pumps the gases in the mixing apparatus via branches **B15** and **B39A**, through check valve **V39A** into spark chamber **251** until the vacuum and pressure gauge **242** indicates that the gases within spark chamber **251** are at atmospheric pressure. Valve **V34** is then closed. The spark chamber is similar to a cloud chamber. Six or more high capacity brass capacitor plates are spaced 1/8" to 1/4" apart in the chamber. A small plastic container holds the thorium 232. One side of the chamber is equipped with a thick glass window through which sparks in the chamber may be observed. A potential is placed on the brass plates in the chamber and the current flowing between the plates is measured. If this current exactly corresponds to the ionisation current, the mixture is acceptable. A difference of greater than 5% is not acceptable. A lesser difference can be corrected by recirculating the gas in the mixer and particularly through ionisation gauge **255** as previously described in the circulation step. A second test is then given the gases that pass the first test. A calculated high frequency current is gradually imposed on the spark chamber capacitor plates. This excitation causes neutrons to be emitted from the thorium 232 which, if the mixture is satisfactory, can be easily seen as a thin thread of light in the chamber. If the mixture is not satisfactory, light discharges cannot be seen and the high frequency circuit will short out and turn off before the desired frequency is reached.

To bottle the mixture, valve **V33** is opened and valves **V36** and **V40** are closed. During bottling polariser **289**, twin parallel magnetic coil **287**, ionisation unit **215** and ion gauge **255** are electrically energised (all electrical circuits are previously de-energised) to improve the stability of the mixture. The prepared gases are withdrawn from the mixing apparatus via branches **B24** and **B16**, ionisation unit **215**, branch **B17**, filters **293** and **295**, polariser **289**, twin parallel magnetic coil **287**, branch **B39**, ion gauge **255**, check valve **V39A**, branch B38 and spark chamber 251. If desired, after bottling the mixer may be exhausted by opening valves **V12, V13, V14, V23, V24, V29, V32, V57** and **V59**. Of course, one can also automate the fuel preparation process to be continuous so that it would never be necessary to exhaust the gas.

In operation of mixing apparatus **201**, certain operational factors must be considered. For one, no electrical devices can be on without the pump being in operation because an electrical device that is on can damage adjacent gas that is not circulating. For another, it should be noted that directed cathode ray tube **265**, non-directed cathode ray tube **227** and focused x-ray tube **263** serve different functions at different points in the mixing process. In one mode, they provide hot cathode radiation, which can occur only in a vacuum. When gases are flowing through these devices, they provide a cold cathode discharge. For example, during argon polarisation and the circulation step, focused x-ray tube **263** is under vacuum and affects the gases flowing through ionisation head **240** by way of hot cathode radiation. During the introduction of the different gases into mixing apparatus **201** and during the recirculation step, the gases are flowing through focused x-ray tube **263**, which affects the gases by way of a cold cathode discharge.

It is preferred that each switchable electrical component in mixing apparatus **201** be wired into a separate circuit despite the fact that one of the poles of each could be commonly wired. In a common ground circuit if one device is turned on, all of the other units may also turn on because the gases in the device are conductive. In addition, if one unit on a common circuit were energised with high frequency current, the others would also be affected. In the same vein, the high frequency current cannot be used when the cathode ray tubes, the x-ray tubes or the dischargers are heated and under vacuum because the heater filaments will burn out.

Finally, the current source, the variable rectifiers and the electrical measuring instruments must be located more than ten feet from mixing apparatus **201** because the high frequency current is harmful to the rectifiers, causing them to burn out or short out.

It is hoped that a brief summary of the concepts used by the inventor in developing the above invention will be helpful to the reader, it being understood that this summary is in no way intended to limit the claims which follow or to affect their validity. The first concept is that of using an inert gas mixture at approximately one atmosphere at TDC (at ignition) as a fuel in a thermonuclear energy production process. The second concept is the layering of

the various inert gases, which layering is designed to confine the input energy in the innermost layers during pre-excitement and ignition, to provide thermal insulation for the container walls during and after ignition, to transmit power resulting from the ignition through the layers in turn to the piston, to absorb the pressure generated during ignition to protect the cylinder walls, and to provide an orderly, predictable positioning of the argon layer during the BDC to TDC portion of the engine cycle. The third concept of this invention involves utilising electric current produced in one cylinder of a pair to perform functions in the other cylinder of that pair. This concept includes the sub-concepts of generating electric current by atomic recombination and of electric generation in place resulting from the rotation of layered inert gases within each cylinder because of the changed polarity of the encircling coils at BDC, from judicious placement of coils which produce magnetic field lines which are cut by a near perfect conductor (polarised argon), and from movement of said near perfect conductor through the magnetic field.

The fourth and fifth concepts of this invention are the transformation of rapid, intense, but short duration thermonuclear reactions into pressure that is transmitted from inert gas to inert gas until it creates linear kinetic energy at the piston, which energy is converted into rotary kinetic energy by a crankshaft, and the use of a shaft-driven generator to provide power to spaced field coils during the BDC to TDC portion of the cycle of each cylinder.

The sixth concept concerns adequate pre-excitement of the inert gas fuel and more particularly involves the sub-concepts of pre-exciting the fuel in the mixing process, of manipulation of the currents in the coils surrounding each cylinder, of discharging the capacitors surrounding each cylinder at predetermined times in the cycles, of causing a stream of electrical particles to flow between electrodes and a conductive discharge point on the piston, of emitting alpha, beta and gamma rays from an anode and a cathode containing low level radioactive material to the piston's discharge point, of accelerating the alpha, beta and gamma rays by the application of a high-voltage field, and of situating capacitor plates 90 degrees from the anode and cathode to slow and reflect neutrons generated during ignition. The seventh concept involves the provision of a minute, pellet-type fission ignition, the heat from which causes a minute fusion as the result of the ignition chamber shape and arrangement, as a result of the collision of the alpha, beta and gamma rays and the electrical particles at a focal point in conjunction with the discharge of the capacitors that surround the cylinder through the electrodes, and as a result of increasing the magnetic field in the direction of the movement of each piston.

Robert Britt's Inert Gas Engine

US Patent 3,977,191 **31st August 1976** **Inventor: Robert G. Britt**

ATOMIC EXPANSION REFLEX OPTICS POWER SOURCE (AEROPS) ENGINE

ABSTRACT

An engine is provided which will greatly reduce atmospheric pollution and noise by providing a sealed system engine power source which has no exhaust nor intake ports. The engine includes a spherical hollow pressure chamber which is provided with a reflecting mirror surface. A noble gas mixture within the chamber is energised by electrodes and work is derived from the expansion of the gas mixture against a piston.

SUMMARY OF THE INVENTION

An atomic expansion reflex optics power source (AEROPS) engine, having a central crankshaft surrounded by a crankcase. The crankcase has a number of cylinders and a number of pistons located within the cylinders. The pistons are connected to the crankshaft by a number of connecting rods. As the crankshaft turns, the pistons move in a reciprocating motion within the cylinders. An assembly consisting of a number of hollow spherical pressure chambers, having a number of electrodes and hollow tubes, with air-cooling fins, is mounted on the top of each cylinder. The necessary gaskets are provided as needed to seal the complete engine assemblies from atmospheric pressure. A means is provided to charge the hollow spherical pressure chamber assembly and the engine crankcase with noble gas mixtures through a series of valves and tubes. A source of medium-voltage pulses is applied to two of the electrodes extending into each of the hollow spherical pressure chambers.

When a source of high-voltage pulses is applied from an electrical rotary distributor switch to other electrodes extending into each of the hollow spherical pressure chambers in a continuous firing order, electrical discharges take place periodically in the various hollow spherical pressure chambers. When the electrical discharges take place, high energy photons are released on many different electromagnetic frequencies. The photons strike the atoms of the various mixed gases, e.g., xenon, krypton, helium and mercury, at different electromagnetic frequencies to which each is selectively sensitive, and the atoms become excited. The first photons emitted are reflected back into the mass of excited atoms by a reflecting mirror surface on the inside wall of any particular hollow spherical pressure chamber, and this triggers more photons to be released by these atoms. They are reflected likewise and strike other atoms into excitation and photon energy release. The electrons orbiting around the protons of each excited atom in any hollow spherical pressure chamber increase in speed and expand outward from centre via centrifugal force causing the atoms to enlarge in size. Consequently, a pressure wave is developed, the gases expand and the pressure of the gas increases.

As the gases expand, the increased pressure is applied to the top of the pistons in the various cylinders fired selectively by the electrical distributor. The force periodically applied to the pistons is transmitted to the connecting rods which turn the crankshaft to produce rotary power. Throttle control valves and connecting tubes form a bypass between opposing hollow spherical pressure chambers of each engine section thereby providing a means of controlling engine speed and power. The means whereby the excited atoms are returned to normal minimum energy ground-state and minimum pressure level, is provided by disrupting the electrical discharge between the medium-voltage electrodes, by cooling the atoms as they pass through a heat transfer assembly, and by the increase in the volume area above the pistons at the bottom of their power stroke. The AEROPS engine as described above provides a sealed unit power source which has no atmospheric air intake nor exhaust emission. The AEROPS engine is therefore pollution free.

BRIEF OBJECTIVE OF THE INVENTION

This invention relates to the development of an atomic expansion reflex optics power source (AEROPS) engine, having the advantages of greater safety, economy and efficiency over those disclosed in the prior art. The principal object of this invention is to provide a new engine power technology which will greatly reduce atmospheric pollution and noise, by providing a sealed system engine power source which has no exhaust nor intake ports.

Engine power is provided by expanding the atoms of various noble gas mixtures. The pressure of the gases increases periodically to drive the pistons and crankshaft in the engine to produce safe rotary power. The objects and other advantages of this invention will become better understood to those skilled in the art when viewed in light of the accompanying drawings.

BRIEF DESCRIPTION OF THE DRAWINGS

Fig.1 is an elevational view of the hollow spherical pressure chamber assembly, including sources of gas mixtures and electrical supply:

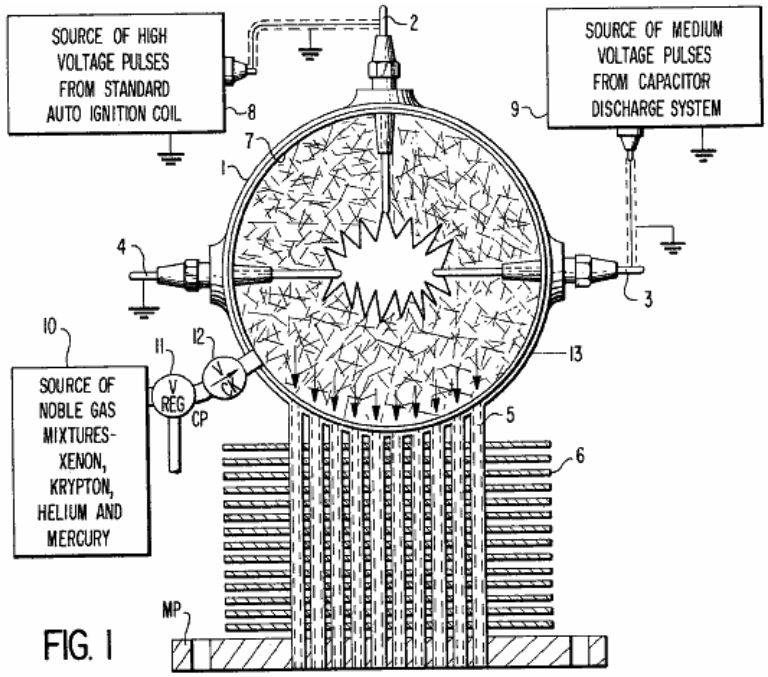

FIG. 1

Fig.2 is an elevational view of the primary engine power stroke:

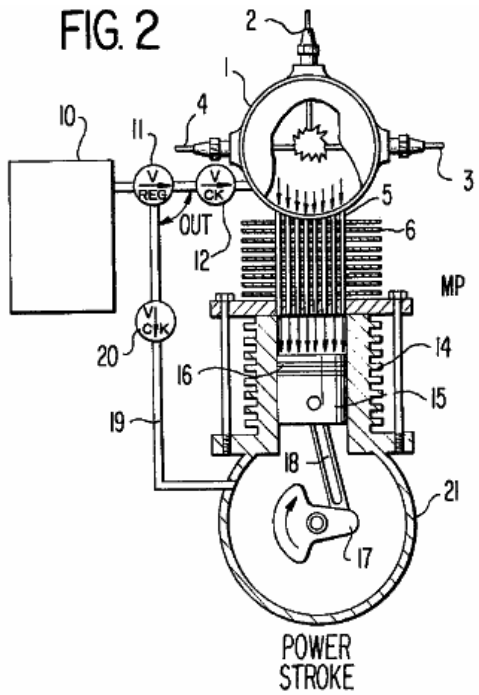

FIG. 2

Fig.3 is an elevational view of the primary engine compression stroke:

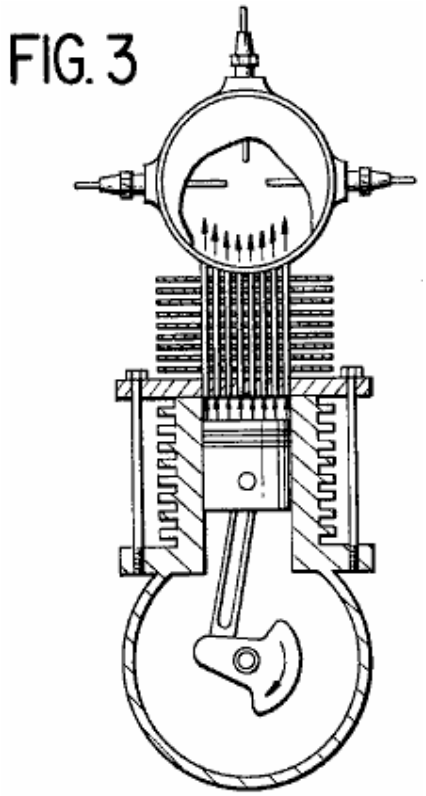

Fig.4 is a rear elevational view of a six cylinder AEROPS engine:

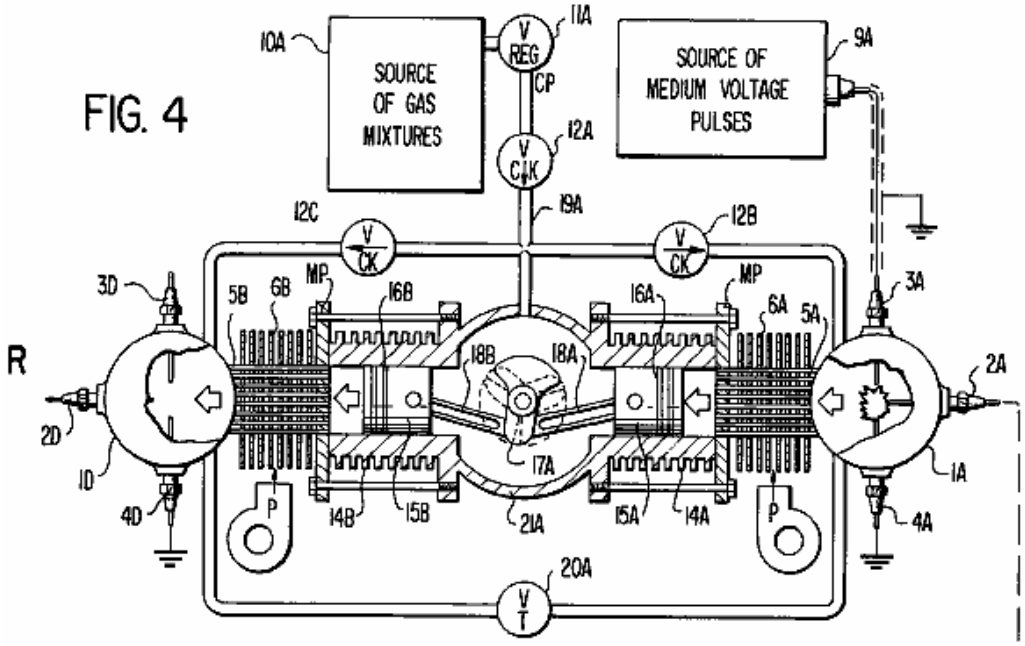

Fig.5 is a top view of the six cylinder AEROPS engine:

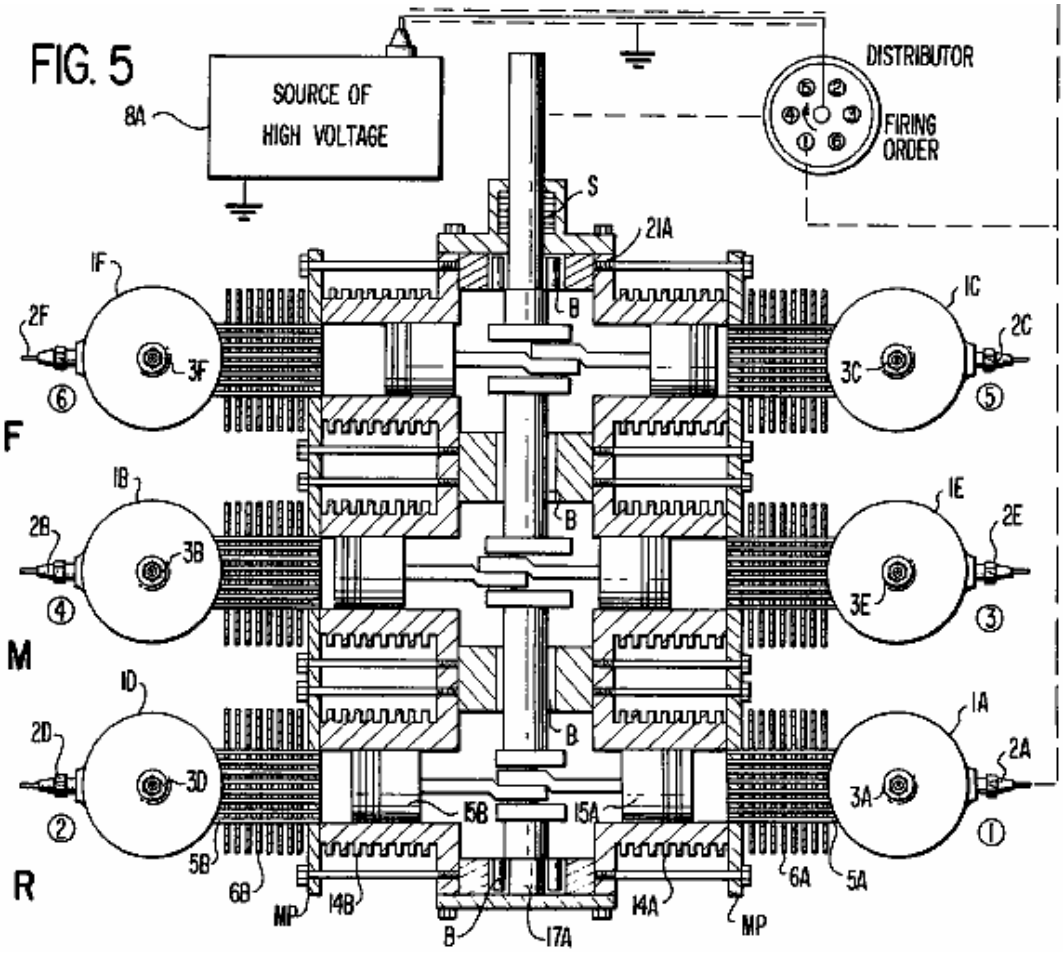

Fig.6 is an electrical schematic of the source of medium-voltage:

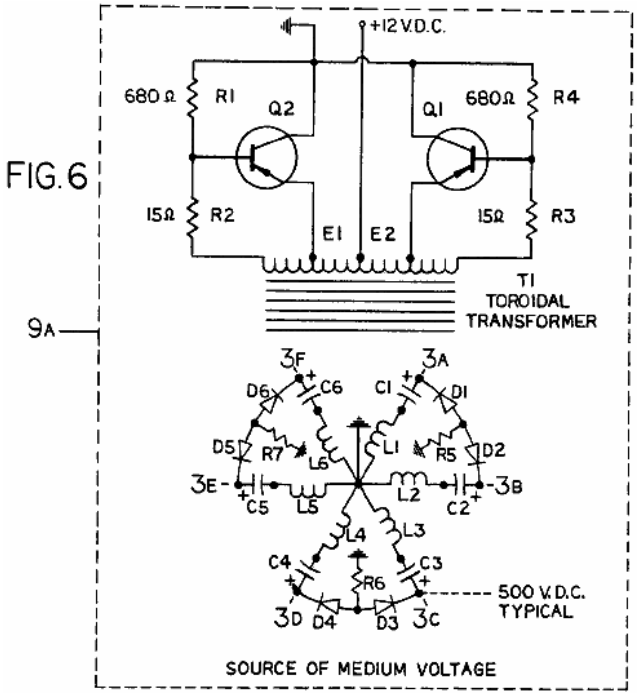

Fig.7 is an electrical schematic of the source of high-voltage:

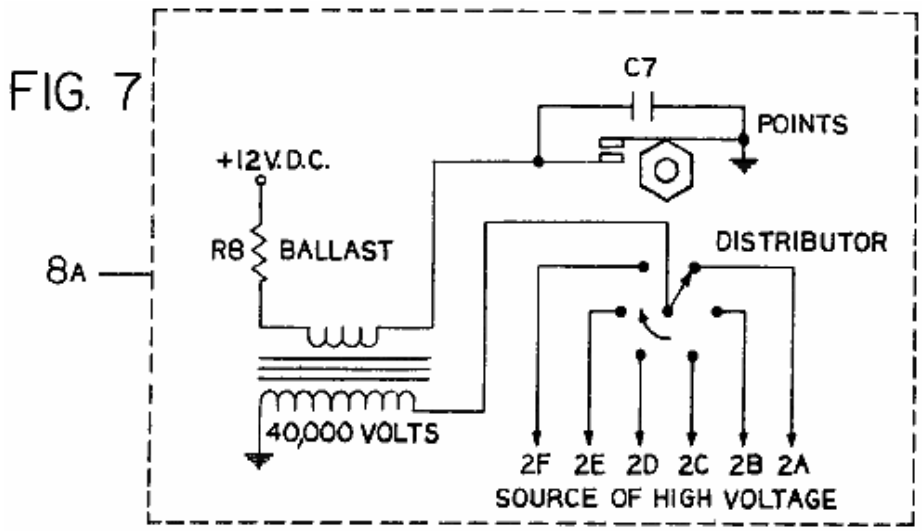

DETAILED DESCRIPTION

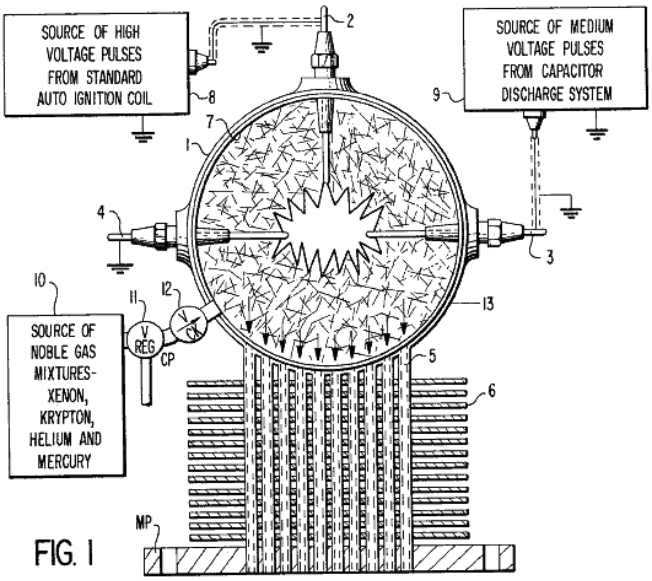

Referring to **Fig.1** of the drawings, the AEROPS engine comprises a hollow spherical pressure chamber **1** having an insulated high-voltage electrode **2** mounted on the top, an insulated medium-voltage electrode **3** mounted on the right, and an insulated common ground electrode **4** mounted on the left, as shown in this particular view. Electrodes **2, 3** and **4** extend through the wall of the hollow spherical pressure chamber **1** and each electrode forms a pressure seal. A plurality of hollow tubes **5** arranged in a cylindrical pattern extend through the wall of the hollow spherical pressure chamber **1**, and each hollow tube is welded to the pressure chamber to form a pressure seal. The opposite ends of hollow tubes **5** extend through the mounting plate **MP** and are welded likewise to form a pressure seal. A plurality of heat transfer fins **6** are welded at intervals along the length of said hollow tubes **5**. A bright reflecting mirror surface **7** is provided on the inner wall of the hollow spherical pressure chamber **1**. A source of high-voltage **8** is periodically connected to the insulated high-voltage electrodes **2** and **4**. A source of medium-voltage **9** from a discharge capacitor is connected to the insulated medium-voltage electrodes **3** and **4**. A source of noble gas mixtures **10**, e.g., xenon, krypton, helium and mercury is applied under pressure into the hollow spherical pressure chamber **1** through pressure regulator valve **11** and check valve **12**.

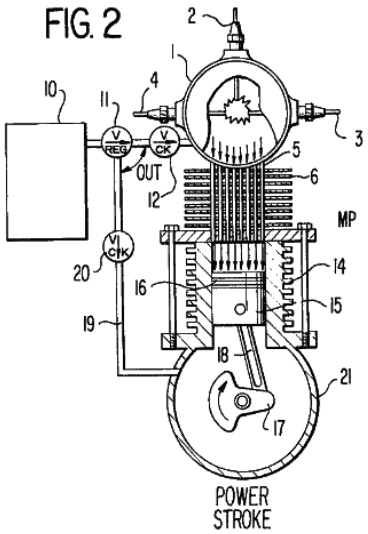

Referring now to **Fig.2** of the drawings, the complete assembly **13** shown in **Fig.1** is mounted on the top of the cylinder **14** via mounting plate **MP**. The necessary gaskets or other means are provided to seal the engine and prevent loss of gases into the atmosphere. The piston **15** located within cylinder **14** has several rings **16** which seal against the inner wall of the cylinder. The piston **15** is connected to the crankshaft **17** by connecting rod **18**. The source of noble gas mixtures **10** is applied under pressure into the crankcase **21** through pressure regulator valve **11**, check valve **12** and capillary tube **19**. The piston **15** is now balanced between equal gas pressures. Assuming that the engine is running and the piston **15** is just passing Top-Dead-Centre (TDC), a source of medium-voltage from a capacitor discharge system **9** (**Fig.6**, a single typical capacitor section) is applied to electrodes **3** and **4**. A source of high-voltage pulses from a standard ignition coil **8** (such as shown in **Fig.7**) is applied to electrodes **2** and **4** and the gases within the hollow spherical pressure chamber **1** are ionised and made electrically conductive. An electrical discharge takes place between electrodes **3** and **4** through the gases in the hollow spherical pressure chamber **1**.

The electrical discharge releases high energy photons on many different electromagnetic frequencies. The photons strike the atoms of the various gases, e.g., xenon, krypton, helium and mercury at different electromagnetic frequencies to which each atom is selectively sensitive and the atoms of each gas become excited. The first photons emitted are reflected back into the mass of excited atoms by the reflecting mirror surface **7**. This triggers more photons to be released by these atoms, and they are reflected likewise from the mirror surface 7 and strike other atoms into excitation and more photons are released as the chain reaction progresses. The electrons orbiting around the protons of each excited atom increase in speed and expand outward in a new orbital pattern due to an increase in centrifugal force. Consequently, a pressure wave is developed in the gases as the atoms expand and the overall pressure of the gases within the hollow spherical pressure chamber **1** increases. As the gases expand they pass through the hollow tubes **5** and apply pressure on the top of piston **15**. The pressure pushes the piston **15** and the force and motion of the piston is transmitted through the connecting rod **18** to the crankshaft **17** rotating it in a clockwise direction. At this point of operation, the power stroke is completed and the capacitor in the medium-voltage capacitor discharge system **9** is discharged. The excited atoms return to normal ground state and the gases return to normal pressure level. The capacitor in the medium-voltage capacitor discharge system **9** is recharged during the time period between (TDC) power strokes.

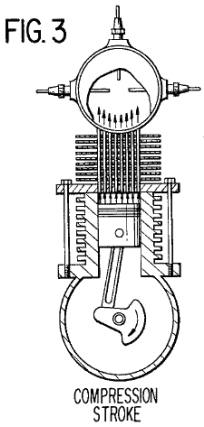

Referring now to **Fig.3** of the drawings, the compression stroke of the engine is shown. In this engine cycle the gases above the piston are forced back into the hollow spherical pressure chamber through the tubes of the heat transfer assembly. The gases are cooled as the heat is conducted into the fins of the heat transfer assembly and carried away by an air blast passing through the fins. An example is shown in **Fig.4**, the centrifugal air pump **P** providing an air blast upon like fins.

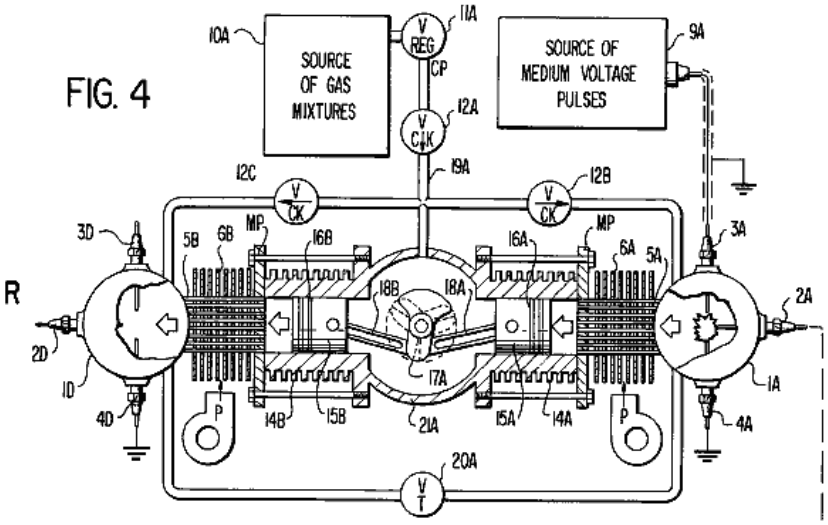

Some of the basic elements of the invention as set forth in **Fig.1**, **Fig.2**, and **Fig.3** are now shown in **Fig.4** and **Fig.5** which show complete details of a six-cylinder horizontally-opposed AEROPS engine.

Referring now to **Fig.4** and **Fig.5** of the drawings. **Fig.4** is a view of the rear section of the engine showing the crankshaft, centre axis and two of the horizontally-opposed cylinders. In as much as the rear **R**, middle **M** and front **F** sections of the engine possess identical features, only the rear **R** engine section will be elaborated upon in detail in order to prevent repetition and in the interest of simplification. The crankshaft **17A** consists of three cranks spaced 120 degrees apart in a 360 degree circle as shown. Both connecting rods **18A** and **18B** are connected to the same crank. Their opposite ends connect to pistons **15A** and **15B**, located in cylinders **14A** and **14B** respectively. Each piston has pressure sealing rings **16A** and **16B**. The hollow spherical pressure chamber assemblies consisting of **1A** and **1D** are mounted on cylinders **14A** and **14B** via mounting plates **MP**. The necessary gaskets are provided as needed to seal the complete engine assemblies from atmospheric pressure.

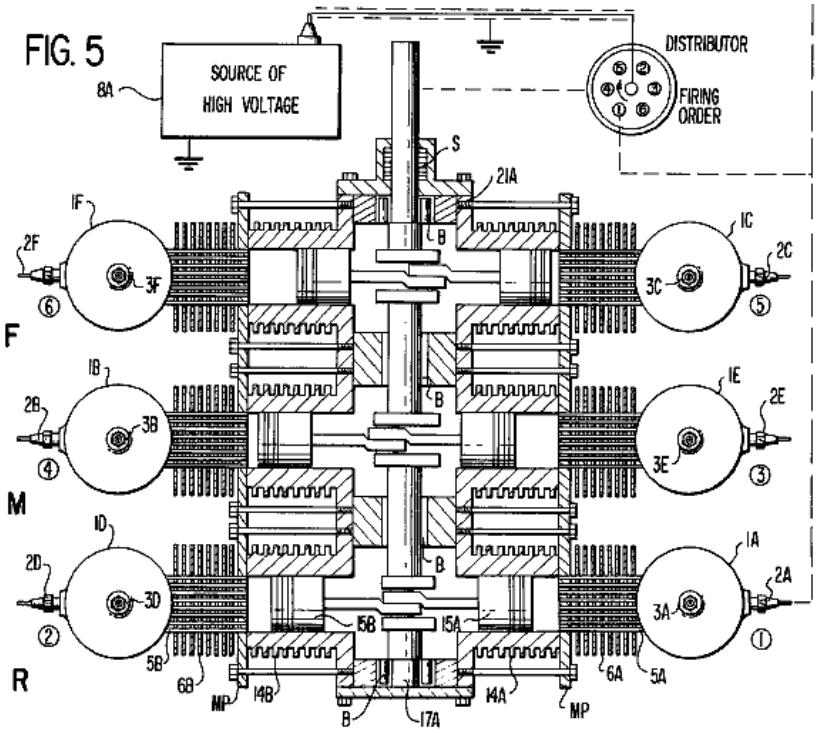

The source of gas mixtures **10A** is applied under pressure to pressure regulator valve **11A** and flows through check valve **12A**, through check valve **12B** to the hollow spherical pressure chamber **1A**, and through check valve

12C to the hollow spherical pressure chamber **1D**. The gas flow network consisting of capillary tubes below point **19A** represents the flow of gases to the rear section **R** of the engine. The middle section **M** and the front section **F** both have gas flow networks identical to that consisting of capillary tubes below point **19A**, while the gas flow network above is common to all engine sections. Throttle valve **20A** and the connecting tubing form a variable bypass between hollow spherical pressure chambers **1A** and **1D** to control engine speed and power. Engine sections **R**, **M** and **F** each have this bypass throttle network. The three throttle valves have their control shafts ganged together. A source of medium-voltage pulses **9A** is connected to medium-voltage electrodes **3A** and **3D**. In one particular embodiment the medium-voltage is 500 volts. A source of high-voltage pulses **8A** is connected to electrode **2A** through the distributor as shown. Electrode **4A** is connected to common ground. Centrifugal air pumps **P** force air through heat transfer fins **6A** and **6B** to cool the gases flowing in the tubes **5A** and **5B**.

Fig.5 is a top view of the AEROPS engine showing the six cylinders and crankshaft arrangement consisting of the rear **R**, middle **M** and front **F** sections. The crankshaft **17A** is mounted on bearings **B**, and a multiple shaft seal **S** is provided as well as the necessary seals at other points to prevent loss of gases into the atmosphere. The hollow spherical pressure chambers **1A, 1B, 1C, 1D, 1E** and **1F** are shown in detail with high-voltage electrodes **2A, 2B, 2C, 2D, 2E, 2F** and medium-voltage electrodes **3A, 3B, 3C, 3E** and **3F**. The common ground electrodes **4A, 4B, 4C, 4D, 4E, 4F** are not shown in **Fig.5** but are typical of the common ground electrodes **4A** and **4D** shown in **Fig.4**. It should be noted that the cranks on crankshaft **17A** are so arranged to provide directly opposing cylinders rather than a conventional staggered cylinder design.

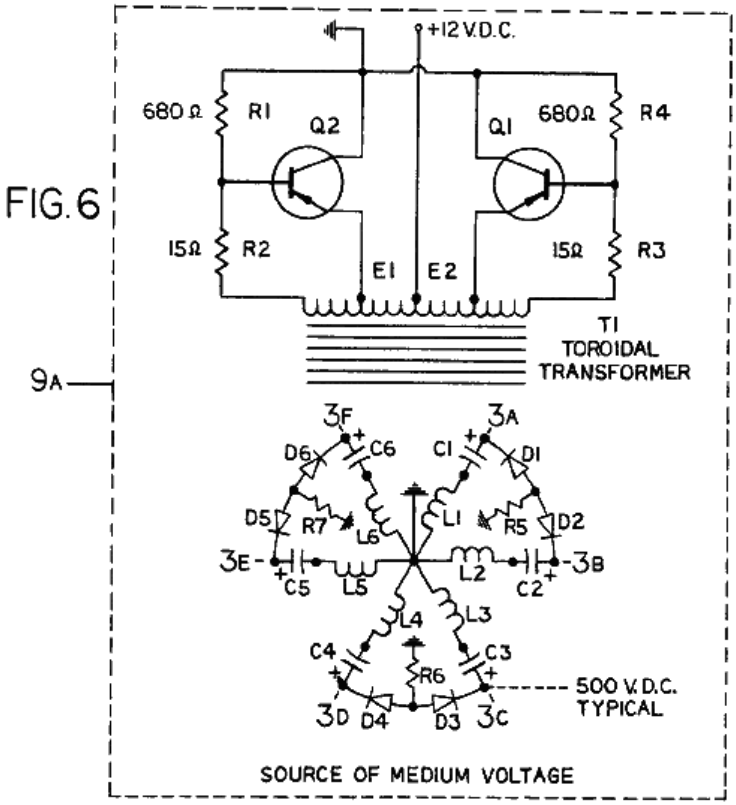

Fig.6 is an electrical schematic of the source of medium-voltage **9A**. The complete operation of the converter is explained as follows: The battery voltage 12 VDC is applied to transformer **T1**, which causes currents to pass through resistors **R1, R2, R3** and **R4**. Since it is not possible for these two paths to be exactly equal in resistance, one-half of the primary winding of **T1** will have a somewhat higher current flow. Assuming that the current through the upper half of the primary winding is slightly higher than the current through the lower half, the voltages developed in the two feedback windings (the ends connected to **R3** and **R2**) tend to turn transistor **Q2** on and transistor **Q1** off. The increased conduction of **Q2** causes additional current to flow through the lower half of the transformer primary winding. The increase in current induces voltages in the feedback windings which further drives **Q2** into conduction and **Q1** into cut-off, simultaneously transferring energy to the secondary of **T1**. When the current through the lower half of the primary winding of **T1** reaches a point where it can no longer increase due to the resistance of the primary circuit and saturation of the transformer core, the signal applied to the transistor from the feedback winding drops to zero, thereby turning **Q2** off. The current in this portion of the primary winding drops immediately, causing a collapse of the field about the windings of **T1**. This collapse in field flux, cutting across all of the windings in the transformer, develops voltages in the transformer windings that are opposite in polarity to the voltages developed by the original field. This new voltage now drives **Q2** into cut-off

and drives **Q1** into conduction. The collapsing field simultaneously delivers power to the secondary windings **L1, L2, L3, L4, L5** and **L6**. The output voltage of each winding is connected through resistors **R5, R6** and **R7** and diode rectifiers **D1, D2, D3, D4, D5** and **D6**, respectively, whereby capacitors **C1, C2, C3, C4, C5** and **C6** are charged with a medium-voltage potential of the polarity shown. The output voltage is made available at points **3A, 3B, 3C, 3D, 3E** and **3F** which are connected to the respective medium-voltage electrodes on the engine shown in **Fig.4** and **Fig.5**.

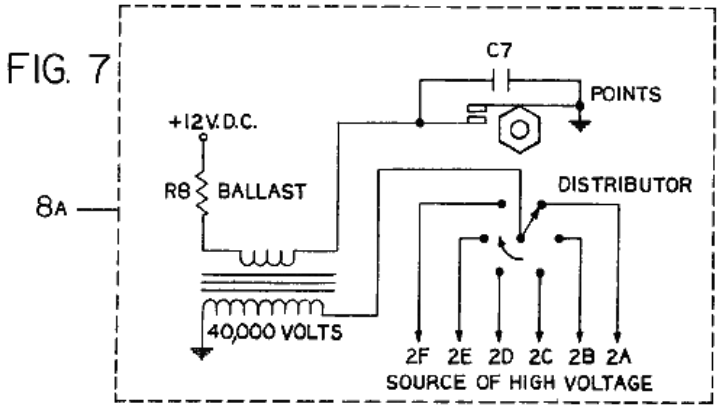

Referring now to **Fig.7** of the drawings, a conventional "Kettering" ignition system provides a source of high-voltage pulses **8A** of approximately 40,000 volts to a distributor, which provides selective voltage output at **2A, 2B, 2C, 2D, 2E** and **2F**, which are connected to the respective high-voltage electrodes on the engine shown in **Fig.4** and **Fig.5**. The distributor is driven by the engine crankshaft **17A** (**Fig.5**) at a one to one mechanical gear ratio.

Referring again to **Fig.4** and **Fig.5** of the drawings, the operation of the engine is as follows: Assuming that a source of noble gas mixtures, e.g., xenon, krypton, helium and mercury is applied under pressure to the hollow spherical pressure chambers **1A, 1B, 1C, 1D, 1E** and **1F** and internally to the crankcase **21A** through pressure regulator valve **11A** and check valves **12A**, **12B** and **12C**; and the source of medium-voltage **9A** is applied to electrodes **3A, 3B, 3C, 3D, 3E** and **3F**; and a source of high-voltage pulse **8A** is applied to electrode **2A** through the timing distributor, the gas mixtures in the hollow spherical pressure chamber **1A** is ionised and an electrical discharge occurs immediately between electrodes **3A** and **4A**.

High-energy photons are released on many different electromagnetic frequencies. The photons strike the atoms of the various gases, e.g., xenon, krypton, helium and mercury at different electromagnetic frequencies to which each is particularly sensitive and the atoms of each gas become excited. The first photons emitted are reflected back into the mass of excited atoms by the internal reflecting mirror surface on the inside wall of the hollow spherical pressure chamber **1A**. This triggers more photons to be released by these atoms and they are reflected likewise from the mirror surface and strike other atoms into excitation and more photons are released as the chain reaction progresses. The electrons orbiting around the protons of each excited atom in the hollow spherical pressure chamber **1A** increase in speed and expand outward in a new orbital pattern due to an increase in centrifugal force. Consequently, a pressure wave is developed in the gases as the atoms expand and the overall pressure of the gases within the hollow spherical pressure chamber **1A** increases.

As the gases expand they pass through the hollow tubes **5A** applying pressure on the top of piston **15A**. The pressure applied to piston **15A** is transmitted through connecting rod **18A** to the crankshaft **17A** rotating it in a clockwise direction. As the crankshaft **17A** rotates it pushes piston **15B** via connecting rod **18B** in the direction of a compression stroke, forcing the gases on the top of the piston through hollow tubes **5B** into the hollow spherical pressure chamber **1D**. As the gases pass through the hollow tubes **5A** and **5B** the heat contained in the gases is conducted into the heat transfer fins **6A** and **6B**, where it is dissipated by a blast of air passing through said fins from the centrifugal air pumps **P**. At this point of operation the power stroke of piston **15A** is completed and the capacitor in the medium-voltage capacitor discharge system **9A** is discharged. The excited atoms return to normal ground state and the gases return to normal pressure level. The capacitor in the medium-voltage capacitor discharge system **9A** is recharged during the time period between the power strokes of piston **15A**.

The above power stroke cycle occurs exactly the same in the remaining cylinders as the high-voltage firing order progresses in respect to the position of the distributor switch. In as much as the AEROPS engine delivers six power strokes per single crankshaft revolution, the crankshaft drives the distributor rotor at a one to one shaft ratio. The complete high-voltage firing order is 1, 4, 5, 2, 3, 6, whereas, the high-voltage is applied to electrodes **2A, 2B, 2C, 2D, 2E** and **2F** respectively. A means of controlling engine speed and power is provided by a plurality of throttle control valves and connecting tubes which form a bypass between opposing hollow spherical pressure chambers of each engine section.

The AEROPS engine as described above provides a sealed unit power source which has no atmospheric air intake nor exhaust emission and is therefore pollution free.

Floyd Sweet

Recently, some additional information on Floyd Sweet's device, has been released publicly by an associate of Floyd's who goes just by his first name of "Maurice" and who, having reached the age of seventy has decided that it is time to release this additional information.

Maurice says: After observing the comments made over the past year regarding the Sweet-VTA Energy Device, I decided to "come out of the woodwork" and explain what basically is NOT known regarding Floyd Sweet ("Sparky") and his energy device.

Keep in mind that I am 70 years old, quite computer illiterate, my background Being mainly Political Science (Graduate Degree); consulting with State Legislatures; Mental Health (former Executive Director of five clinics); and, acquiring Venture Capital for High Tech. Equipment (such as medical equipment) and various Projects. My story is very unusual and strange, but, nevertheless TRUE! At my age I have no one to impress with what I am about to tell you. My only interest is to correct error where possible and to make certain information known!

Remember, that I have never had any education in electronics. This was a real advantage for me because I did not have any electrical principles which I had to UN-LEARN in anything that Floyd told us. Unfortunately, one of my brothers who trained for 35 years in electronics was "blown away" when Floyd told him that "he needed to reverse the concepts which he was taught about the action of an electron and treat it like it was positive". Therefore, for Sparky's modelling, electrons were flowing and acting in the opposite direction to what was normally modelled by a trained physicist. See what I mean? The Dean of the School of Science of MIT that verified that Sparky had an MSEE degree and came third in his class of more than two hundred.

Hopefully sincere researchers will be able to obtain some useful information in what I attempt to explain in the future that will help them to duplicate what Floyd had. In this respect, one day after Floyd had repeatedly asked me: "What is this device Maurice?" and I repeatedly gave him the wrong answer, saying that it was an energy device, I finally realised that what was important to him was that he considered the device to be a TIME MACHINE - his emphasis was NOT on the energy. He told me never to forget that the most important thing was that the device was a "Time Machine".

Maurice draws attention to the fact that Floyd Sweet graduated as an M.S.E.E. from the Massachusetts Institute of Technology in 1969 and his thesis "Dynamics of Magnetic Domains" is considered by the M.I.T. scientific community to be unparalleled in magnetic concepts. He received the coveted Dean's Award for his scientific research and his academic level in Electrical Engineering achievement ranks third in the history of the M.I.T. School of Science. He has an extraordinary talent in the area of Engineering Mathematics not to mention his concept of electromagnetic and related electrical phenomena and understanding of abstract intangibles needed to predict the unforeseen.

Maurice says: In about 1988 John, who my two brothers and I were involved with in the High Tech field realised that my brother, who was a Doctor (Doctor brother), was interested in negative energy devices for the treatment of the physical body (similar to Rife/Tesla Frequency Machines). John had formerly been employed at NASA with Floyd Sweet. John lived in California close to Floyd (Sherman Oaks).

My doctor brother and I were introduced to Floyd by John and we waited patiently for the time when we could see the VTA device. We saw it on the table at his house during various visits but it was not operating. Floyd was like many inventors who played games with you. Each time we would drive 13 hours to see him thinking we could see the device operating, but he would have some excuse for not turning it on, or he would just ignore the purpose of our visit.

On one visit, I looked over at Floyd and he was “showing off” his Barium Ferrite bar magnet. The magnet was approximately 1/2” thick, 7” long and 3” wide. He had a small piece of metal that was standing on the top of the magnet at a 45 degree angle. As I recall, he claimed that the 45 degree angle was needed in the treatment of the magnet so that it could capture Scalar waves. The magnets were mainly functioning as a “gate” for the Scalar waves. Additionally, if you placed a piece of thin “flexible” (ribbon type) metal flat on the top of the magnet, the middle of the “ribbon metal” would be “sucked down” flat at the middle of the magnet and both ends of the “ribbon metal” would be bowed-up at each end of the magnet. Also, I came to understand from another inventor that we introduced later on to Floyd that the “figure eight” design (flux flow?) on the top of the magnet played an important part in the functioning of the magnet - I don’t really know about the concept and can’t relay any additional information.

On another visit, Floyd demonstrated the flowing flux of the magnet. He had a TV monitor and he would place the magnet by the screen and you could see all the beautiful colours of the flux as it moved across the monitor screen. My electronics brother told me that Floyd had told him that he had a way of treating the magnet by calibrating the Scalar wave angle coming in using the TV monitor. A side note is that Floyd delighted in telling people, when they asked how he treated his magnets, they should get the magnets real hot first. This apparently "screwed up" the magnetism and he enjoyed doing this for some weird reason!

Finally, after 12 trips across the California Desert, Floyd agreed to show us the Device in operation. In his defence, Floyd did claim that on some earlier planned demonstrations that his magnets had been "pulverized" by artificial earthquakes coming up through Mexico. He designed some type of buffer in the Device that eliminated the problem, but, it was an on-going problem for quite a period of time. This reminds me now that I must digress because I need to tell you about the Government (or who?) involvement with us.

When we first started to visit Floyd, our phones were all "tapped" - I do not know by whom. My electronics brother worked full-time with the Air National Guard and his specialty was electronic Security, Crypto, etc. tied in with SAC bases in our area and the surrounding States. Additionally, he had set-up the "clean room" for the President of the United States when he visited our State. I mention this because even my electronics brother was doubtful in the beginning that we were all being monitored. On one occasion, my doctor brother had his complete prior telephone conversation played back to him when he answered the phone (twenty minutes later) - I think it was probably some type of "screw-up" by whoever was monitoring our phones. My biggest complaint was the consistent early morning 3am call and then a "hang-up" when you answered - for what reason I don't know other than for harassment purposes.

I give you the above information so that you can understand the seriousness of what we were involved with.

Floyd's Energy Device was mainly three things:

(1) It was a healing device - negative electricity - negative time. In theory, you could re-set the template in your DNA with this energy source and therefore cleanse the body of all impurities that your ancestors had acquired over time. Additionally, you could kill current disease (virus/bacteria) in the body by using the right frequencies, and this did not disturb any other body cells. This is why Floyd needed my doctor brother to help him arrive at the proper medical protocol for using his technology. Additionally, if you note in the Payroll Expenses attachment of this e-mail, a one-line item of expenditure is for AIDS-related materials in which Floyd and my doctor brother had a real interest. My doctor brother had an agreement with Floyd to build three medical interferometers which would all have a noble gas plasma inside them. I actually witnessed one of these devices in operation. At the end of the (approximately 20 inch long) tube-like structure you could feel a pulsing being emitted at the end of the tube on to whichever part of the body you wanted treated. My doctor brother had ordered two Interferometers from Floyd which were about 4 feet long.

(2) The VTA energy device is probably the world's worst weapon. Floyd claimed that like Nicola Tesla, you could cause "artificial earthquakes" - besides destroying buildings. As I understood from people in the intelligence world, which we de-briefed after we saw the device operate, three countries have what is called the "Tesla Cannon"; Russia, America and I never found out who the third country was. As mentioned earlier, this energy source is what disabled Floyd's VTA equipment over many months until he got his "buffer" built into his device. Further, this is why the Federal Government had such an interest in what we were doing with Floyd during the time we spent with him.

(3) The device was an Energy source for the home (could change negative energy to positive energy). It was also an energy source for the car and many other purposes. The cost of building one of these energy devices was only about US $200.00 - incredible!

Description of the VTA device:

On the day that we finally got to see the device operating, my doctor brother and I had finally convinced my electronics brother to accompany us to Sherman Oaks, California to see the demonstration. My doctor brother and I had made ALL the preliminary trips to see Floyd minus our electronics brother because he was literally a "doubting Thomas", being heavily involved in the electronics field and full of Maxwell's Theories of electronics, etc. Yes, you could say that he was a traditional electronics person. But, for this reason, we needed my electronics brother to be our DEBUNKER in case the device was not what it was portrayed to be. We had one other witness "Gary", an associate of mine who was to bring in

the venture capital funding if the device proved to be as good as claimed.

The day when we witnessed the VTA device operating is a day which I shall never forget. To actually see a device working, which cost only $200 dollars to make and which could create all the clean energy you would ever need, was "awesome". I know I have been "altered" ever since knowing that such a device existed. Now for a brief description of the Device:

These are not exact measurements but only approximations. The device was on what I believe to be "Plexi glass" (acrylic). Nothing was hidden. You could see everything, top and bottom through the plastic. The Plexi glass structure was approximately 18" square. We were allowed to pick-up the device and carry it around Floyd's living room so you could see that there were no other electrical connections to it.

On top of the Plexi glass case there were three toroidal coils wound with thin windings of varnished copper wire. There were two barium ferrite bar magnets (approx. 7"x 3"x 1/2"). Present was a volt meter which displayed 120v when the device was turned on. Also, there was an ampere meter which measured the electrical currents flowing when Floyd switched different things on-and-off during the demonstration. The items used for load demonstration included the burner part of the stove, a hair dryer, a fan, and five one-hundred watt globe lights. The fascinating thing to me about the light demo was that the lights had a glow like the overhead lights in your kitchen - a very soft, COOL appearance. Not the look of a traditional bright light bulb such as you have in your lamp on a traditional night stand.

I forgot to mention that the device was started by attaching a 9-volt battery which, I understand, started the magnetic flux in motion. Floyd would then connect the "pigtail" on the device and it would become just one circular energy unit.

As Floyd put more load on the device, the ambient temperature around the device (coils) would start to get lower. Additionally, depending on how much load you added, the device would start to lose some of its weight and you then had levitation beginning to take place. I should note at this point that on one meeting with Floyd, his wife Rose, used some expletives when telling how one day, Floyd kept adding more-and-more load to the device and he almost "brought down" the Apartment Complex he lived in at Sherman Oaks. He turned off the equipment, went out on his patio and pretended that it was a California Earthquake! His neighbours never did know what he had in his apartment. In this respect, I never did find out what the big piece of equipment was in his bedroom. It literally stretched from the ceiling to the floor. It was so heavy that the floor was bowed-in and sunken and that "big sucker" had a growling noise when it was on - I never did find out what it was. It was big like some kind of transformer.

The Rest of The Story:

You are probably wondering what the article on Ron Brandt is about. It's a long story, but after I moved Ron and his laboratory all the way from the mouth of Zion's National Park to "someplace" Oregon to hide him out - he was using "Tachyon Beams" with his medical equipment and after only a couple of minutes the "Black Helicopters" would show up - soooo at my doctor brother's request I moved Ron to Oregon. At the time I thought Ron was a "real flake" because when I helped him forward his mail from a small town in Southern Utah, he asked me how to spell the word "electric" so he could put in the full address of "Brandt Electric". Further, Ron said he was only here on this Earth until 2012 - It was now 1987-88 - and then he had to leave to go to another planet! I now wanted to shoot my doctor brother who got me into this whole moving-Ron thing! My doctor brother told me that Ron had to move fast because Ron had told him that an earthquake was coming in the next few days - Right!

Well, guess what happened a few days later? The largest earthquake in many years in that particular location took place and it even wiped out the hot springs at the Resorts along the Virgin River which runs through Zion's National Park and through the small town of Virgin where Ron lived. I since found out that Ron had invented earthquake equipment along with Philo T. Farnsworth's (Inventor of Television) grandson and six months ahead, they had actually predicted the previous great earthquake in California and their prediction was off by only six minutes! The Government is insisting that they want the equipment, so that is one of the reasons for everyone "hiding out".

Now, why am I giving you all this preliminary information regarding Ron Brandt? Well it seems that Ron has a Magnet Motor which weighs only 75 pounds and which can generate power equivalent to that of a 300 horsepower internal combustion engine. Also, the motor can be a retro-fit in any existing car without the need to design a whole new car. This is the connection I will explain later regarding Ron who could not even spell "electric" and Floyd who was placed 3rd in all the inventions to ever come out of MIT - All I can say is "WOW"!

EVENTS SURROUNDING FLOYD'S DEATH:

I will now leave it up to you to decide whether or not Floyd died of natural causes or was "taken out" by some person, group, or some Government.

In the summer of 1994, my doctor brother suddenly "passed out" at one of our Venture Capital meetings and was rushed to the hospital. After an MRI of his head, it was discovered that he had a brain tumour and it was of the worst kind (very fast growing). This seemed impossible as my doctor brother had always monitored his body daily as he did an occasional experiment on himself with certain medicines. By 11th November 1994, my doctor brother had died. He told us prior to death that "they" (whoever "they" were) had succeeded in placing the fastest growing cancer tumour into his brain - How? - I have no idea! I never did find out. What is important to the free-energy field was that my doctor brother was in daily contact with Floyd and his Associates regarding the energy devices. I was not that important and basically only accompanied my doctor brother to meetings and kind of "got lost in the woodwork". Intellectually, I really was not a threat to anyone. I was only there at meetings to help acquire venture capital.

On the very day that my doctor brother died, my electronics brother and I were at the home of John, (Floyd's Associate from NASA) who for some strange reason had followed my brothers and I to our home city where we lived, bought a home and took up residence there. We did not complain as he was our go-between with Floyd. But the move still seemed strange to me. The reason my electronics brother and I were with John is that John had arranged a conference call with Floyd and us, to see if there was a possibility for Floyd to make some type of energy device which could power the magnet motor that Ron Brandt had. My brothers and I had all the contractual rights to Ron's Magnet Motor which could be used in any car. I thought to myself that now I can really find out how "real" Ron (who could not even spell "electric") was when I matched him up with Floyd from MIT. I could not believe what I heard as Floyd and Ron conversed at the highest electronic levels - "who the 'hell' is Ron?" I thought. Floyd agreed that he would have no problem doing the prototype for Ron's Magnet Motor to power the car.

Floyd mainly worked with my electronics brother on this project as Floyd needed old vacuum tubes which my electronics brother had to acquire for the device and my electronics brother was a real "bench" person which Floyd seemed to favour over academic Electrical Engineers.

During the Spring of 1995, while Floyd was working on our energy device for the car, John (from NASA) and Floyd were elated that there was supposed to be an announcement from the White House regarding Floyd's VTA Energy Device. It seems that Floyd was a past friend of Senator John Glen (the former NASA astronaut) and he had given Glen one of the energy devices. Unfortunately, Glen gave the device to the Department of Energy, who, according to Floyd, passed the device on to General Motors. Floyd was furious and as I understood Floyd was then going to sue GM for two hundred million dollars. As far as I know Floyd never got the device back. I will always remember the extreme disappointment on the faces of Floyd and John when they realised that the trip to Washington DC for the announcement, was not going to take place.

In July 1995, Floyd let us know that the Energy Device was finished and we were to take possession of it. Floyd now lived in Desert Palms, California and that is where we would pick it up. After much thought, we decided we better not board a plane with the device as we were not sure of any magnetic effects on the instruments of the plane in having it transported - it was new technology which still had many questions to be answered. Instead, we decided to drive our car to Desert Palms and bring the device back ourselves.

Floyd called us the day before we were to leave and asked us if he could keep the device for a couple of extra days. He said he had "someone" coming (I thought he said China) and wanted to show them the device. We said ok, we would plan to pick it up when he was done.

A day later, at about 7:00 am Pacific time, there was a frantic call from Floyd's wife Violet (Floyd's wife Rose had died and he had re-married) to my electronics brother's house. My electronics brother was not at home and my sister-in-law, his wife, took the call from Violet. Violet was very traumatised when she told my sister-in-law that Floyd was dead. There was a lot of shouting going on in the background. The people who were there claimed they were from the FBI and that Floyd's equipment belonged to them. Rose was extremely confused with the death of Floyd and people she had never seen before taking all the equipment out of her house to waiting vans. She asked my sister-in-law what to do and my sister-in-law had NO idea as she was not aware of what my brothers and I had going on!

Violet also said that about 5:00 pm the previous night, two men whom she had never seen before, showed up to see Floyd. Floyd was with them for a period of time and then they left. At about 8:00 pm, Floyd was having a cup of coffee when he fell out of the chair on to the floor. She called for an ambulance and when they arrived they would not let her ride with them. Violet was 75 years old and didn't drive. About twenty minutes later the ambulance called back to Violet and told her they didn't think Floyd was going to "make it"!! As I understand it, Floyd's body was cremated. How soon afterwards, I don't know. The end result for my brothers and I is that ALL of our energy equipment that Floyd made for us was taken - By Whom??

Who were the two men who met with Floyd a few hours before his death? Was anything put in Floyd's coffee by these men? Violet said she had never seen them before and they seemed strange!
Why could Violet not go with her husband in the ambulance? I have seen it happen many times when family is allowed, especially where age is concerned!

How did the FBI (if that is who they were) know that Floyd was dead and show up in the very early morning (about 6:00 am) just hours after he died late at night?

YOU BE THE JUDGE - ALL I KNOW IS THAT ALL OF OUR ENERGY DEVICES (MEDICAL AND CAR-MAGNET MOTOR) ARE GONE!!! WHERE ARE THEY AND WHO ARE THE ONES RESPONSIBLE FOR TAKING THEM ??

Here are some of the known facts about Floyd's energy device:

The invention is a unified-field device and so combines both electromagnetic and gravitational effects in the same unit. For a tiny power input of just 0.31 milliwatt, the unit produces over 500 watts of output power, which is an energy gain of more than 1,500,000. The prototype, has no moving parts, is about 6" x 6" x 4" in size and taps an inexhaustible source of energy. To date, up to one kilowatt of power has been produced in actual tests which required only tiny input power to make the device operate.

Our normal day-to-day energy is "positive energy". The energy produced by Floyd's device is "negative energy" but in spite of this, it powers ordinary equipment, producing light and heat as normal. A device like this has to have a major impact on the world as we know it, because:

1. **It can be easily built. The components are quite ordinary and the cost of the materials in the demonstration prototype was only a few hundred US dollars and it was constructed in just a few hours, using simple tools and equipment.**

2. **The test results are so impressive that there can be no question of errors of measurement when the energy gain is of the order of 1,500,000 times.**

3. **It demonstrates with laboratory precision that the 'law' of Conservation of Energy does not appear to apply during the operation of this device, which is something which most scientists have difficulty in accepting.**

The device has very high performance. When a 1-milliwatt 60Hz sine wave is fed into it, the out put powers 500 watts of standard mains-voltage light bulbs, producing both heat and light. The device has a positive-feedback loop so it's gain is depends directly on the output load and the input power remains unchanged. So to increase the output power, all that is necessary is to connect extra light bulbs or equipment across the output.

When a motor was connected in addition to the light bulbs, the motor ran perfectly well under load and the light bulbs remained as bright as ever. Because it is a "cold electricity" device, the wires feeding the load can be very much smaller in diameter than would be normal for the load and these wires run cold at all times. When the power hits the resistance of the filaments of the light bulbs, it converts into conventional "hot electricity" and the filaments perform in exactly the same way as they do when powered by "hot electricity".

In 1988, Floyd produced a paper which he considered to be very important. The following text is an attempt to reproduce the content his highly mathematical style of presentation. If you are not into complicated mathematical presentations, then just move on past and don't worry about the following technical material, or alternatively, take a quick skim through it and don't bother with the maths. Floyd says:

What is thought of as "empty space" actually contains almost everything in the universe. It is home to all kinds of invisible energy fields and is seething with all kinds of very real forces.

Every kind of matter produces an energy field and these energy fields interact with each other in many complicated ways, producing all sorts of additional effects. These energy fields are the "stuff" of space, or as it is sometimes described, "the virtual vacuum". Space is packed full of all sorts of things but because it does not contain air, we tend to think that there is nothing at all in it. Most people think that "vacuum" means "without air" but when scientists speak of space as "the vacuum" they do not mean that at all, and they use the word "vacuum" to describe to describe (loosely speaking) the place which is between the stars and planets of the universe, and Floyd refers to that vast place as "the vacuum", so please don't think that it has anything to do with air, as it definitely doesn't.

Floyd says: We all think that we know what light is, but the reality is that a particle of light is nothing more than a large interference in the electromagnetic field. Unless it interacts with matter or with another field, any electromagnetic field with not be changed in any way by the vacuum. Electromagnetic fields are a fundamental part of the structure of the vacuum itself. The whole universe is permeated by a constant magnetic field. That field is made up of countless numbers of North and South pole magnets in a completely random scatter.

Einstein has pointed out that $E = mC^2$ which is one way of saying that energy and matter are interchangeable (or are two different faces of the same thing). The energy everywhere in the universe is so great that new particles of matter pop into existence and drop back into their energy form many trillions of times per second. Actually, they exist for such a very short time that calling them "particles" is not really appropriate, so perhaps "virtual particles" might be a better description.

However, if we generate a moving magnetic field, it alters the random nature of this energy in the tiny part of the vacuum where we happen to be, and the vacuum energy becomes much less random and allows a very large amount of vacuum energy to be drawn into our equipment and do what we think of as "useful work" - producing heat and light, powering motors and vehicles, etc. This was proved in laboratory experiments during the week of 19th June 1988 and it is the underlying operating principle of my "Phase-Conjugated Vacuum Triode" device.

The energy produced by this device is "negative energy" which is the reverse of the energy with which we are familiar. The spark caused by a short-circuit in a negative energy system is excessively bright and cold and it produces a barely audible hiss with no explosive force. Melting of wires does not occur and this type of negative current passes through the human body with only the feeling of a chill.

Wires which carry a lot of negative energy remain cool at all times and so tiny wires can feed equipment with hundreds of watts of power. This has been demonstrated in the laboratory and the source of energy is unlimited as it is the virtual vacuum of space itself.

The Nature of Space:

Space itself is the ability to accommodate energy. Consider for a moment, the following illustration:

> **A signal (energy) is transmitted from point "A" to point "B" which are separated by a finite distance. Consider three periods of time:**
>
> **1. The signal is launched from point A.**
> **2. The signal resides in the space between point A and point B.**
> **3. The signal arrives at point B.**
>
> **If 3. occurs simultaneously with 1. we say that the signal has travelled at infinite velocity. If that were the case, then the signal never resided in the intervening space and therefore there must be no space between point A and point B and so both points A and B must be at the same location. For real space to exist between the two points, it is necessary that a signal moving between them has to get "lost" to both points, that is, out of touch with both points for a finite period of time.**

Now, we know that for real space to exist between two points, a signal passing between them has to move at a finite speed between them and if it can't do that, then there can't be any space between them. If space can't accommodate a signal passing between two points, then it has no function and no reality. We are left then with the only real space, the home of the real and virtual vacuum - space which supports a finite, non-zero signal velocity.

A similar argument applies to the impedance of space. A medium can only accommodate positive energy if the medium resists it to a reasonable degree. Neither an infinitely strong spring nor an infinitely weak spring can absorb energy by being compressed. Neither an infinitely large mass nor an infinitely small mass can absorb or accommodate energy imparted by a collision and the same holds true for space.

Energy cannot enter a space of zero impedance any more than a force can bear on a mass of zero magnitude. Similarly, energy could not enter space which has an infinite impedance. It follows therefore, that real space must have:

1. Finite propagation velocity and
2. Finite impedance.

Another way of looking at this is instead of considering the actual speed of propagation of a signal through space, to consider the length of time "t" which it takes the signal to pass through that part of space. We can think of a section of space as being, say, 1 nanosecond wide if it takes a signal 1 nanosecond to traverse it. That is, the energy or signal entering that part of space, leaves it again 1 nanosecond later. Signal propagation speed in the space in which we live is at the speed of light.

General Description of Energy Transfer:
Consider energy flowing straight and level down a transmission line. The energy does not "know" the width of the channel through which it is passing. If the energy flow reaches a point where the conductivity of the channel lowers but the size and shape of the channel remain the same, then not as much energy can flow and some gets reflected back along the channel. The energy current will not "know" if (a) the conductivity has changed or (b) the geometry has changed. The energy current can change direction very easily and so as far as it is concerned, the change caused by (a) is equivalent to the change caused by (b).

The channel through which the energy flows has width and height and the width divided by the height is called the "aspect ratio" of the channel. Energy current has an aspect ratio and if that aspect ratio is forced to change, then some of the flowing energy will reflect so as to keep the *overall* aspect ratio unchanged.

The aspect ratio of energy current is much like the aspect ratio of space itself. While the aspect ratio of space itself can change, it's fundamental velocity of "C" the speed of light in space can't really change. That speed is just our way of visualising time delay when energy resides in a region of space. Uniform space has only two parameters:

(1) Aspect ratio and
(2) Time delay

Aspect ratio defines the shape (but not the magnitude) of any energy flow which enters a given region of space. Velocity or length define the time during which that energy can be accommodated in a region of space.

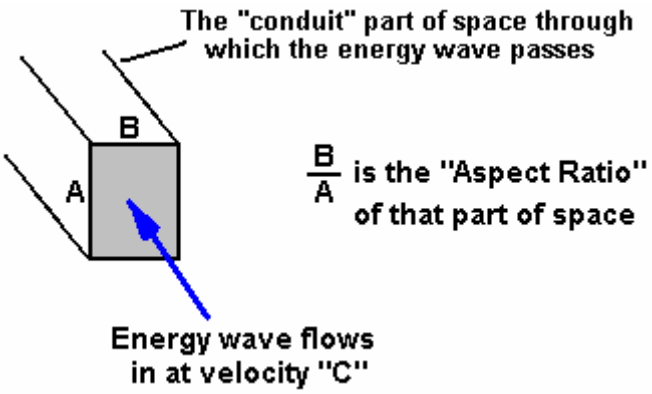

Does an energy flow travel unimpeded through an interface, or does a large part of it get reflected? Space has quiet zones through which energy glides virtually unreflected. It also has noisy zones where the energy current becomes incoherent, bounces around and splits apart. These noisy zones in space either have either rapidly changing geometry or rapidly changing impedance.

Electromagnetic Energy:

The rate of flow of energy through a surface can be calculated using "E" the Electric field, and "H" the Magnetic field intensity. The energy flow through space is E x H per unit area (of it's "conduit's" cross-sectional area) and the energy density is E x H / C where C is the speed of light in space.

If there happen to be two signals of exactly the same strength, passing through each other in opposite directions in such a way that their "H" fields cancel out, then if each has a strength of E/2 and H/2, the

energy density will be E x H / 2C and it will have the appearance of a steady E-field. In the same way, if the E fields cancel out, the result will appear to be a steady "H" field.

Modern physics is based on the faulty assumption that electromagnetics contains two kinds of energy: electric and magnetic. This leads to the Baroque view of physical reality. Under that view, energy seems to be associated with the square of the field intensity, rather than a more reasonable view that it is directly to the field intensity. It is worth remembering that neither Einstein nor most modern physicists were, or are, familiar with the concept of "energy current" described here. However, their work still survives by ignoring the energy current concept, scalar electromagnetics, the works of Tom Bearden, kaluza-Klein and others who dispute Heaviside's interpretations of Maxwell's equations.

The Fallacy of Displacement Current:

Conventional electromagnetic theory proposes that when an electric current flows down a wire into a capacitor, it spreads out across the plate, producing an electric charge on the plate which in turn, leads to an electric field between the plates of the capacitor. The valuable concept of continuity is then retained by postulating a displacement current "after Maxwell". This current is a manipulation of the electric field "E" between the plates of the capacitor, the field having the characteristics of electric current, thus completing the flow of electricity in the circuit. This approach allows Kirchoff's laws and other valuable concepts to be retained even though superficially, it appears that at the capacitor there is a break in the continuous flow of electric current.

The flaw in this model appears when we notice that we notice that the current entered the capacitor at only one point on the capacitor plate. We are then left with the major difficulty of explaining how the electric charge flowing down the wire suddenly distributes itself uniformly across the entire capacitor plate at a velocity in excess of the speed of light. This paradoxical situation is created by a flaw in the basic model. Work in high-speed logic carried out by Ivor Catt has shown that the model of lumped capacitance is faulty and displacement current is an artefact of the faulty model. Since any capacitor behaves in a similar way to a transmission line, it is no more necessary to postulate a displacement current for the capacitor than it is necessary to do so for a transmission line. The removal of "displacement current" from electromagnetic theory has been based on arguments which are independent of the classic dispute over whether the electric current causes the electromagnetic field or vice versa.

The Motional E-Field:

Of all of the known fields; electric, magnetic, gravitational and motional E-field, the only ones incapable of being shielded against are the induced motional E-field and the gravitational field. The nature of the motionally-induced electric field is quite unique. In order to understand it more fully, we must start by discarding a few misleading ideas. When magnetic flux is moved perpendicularly across a conductor, an electromotive force ("e.m.f.") is electromagnetically induced "within" the conductor. "Within" is a phrase which comes from the common idea of comparing the flow of electric current within a wire to the flow of water in a pipe. This is a most misleading comparison. The true phenomenon taking place has little been thought of as involving the production of a spatially- distributed electric field. We can see that the model's origins are likely to have arising from the operation called "flux cutting" which is a most misleading term. A better term "time-varying flux modulation" does not imply any separation of lines of flux. Truly, lines of flux always form closed loops and are expressed mathematically as line integrals.

It is a fallacy to use the term "cutting" which implies time-varying separation which does not in fact ever occur. A motionally-induced E-field is actually created within the space occupied by the moving magnetic flux described above. The field is there whether or not a conductor is present in the space. In terms of a definition, we can say that when magnetic flux of vector intensity B-bar is moved across a region of space with vector velocity V-bar, an electromagnetically induced electric field vector B x V appears in the space at right angles to both B-bar and V-bar. Therefore:

E = B-bar x V-bar . . . . . (1)

It is this field which is related to gravity and which is virtually unshieldable. This field may be called the Motional E-field. According to Tom Bearden, "It seems that the charged particles in the atom act like tiny magnets and their motion in the space surrounding the atom would create this motional E-field". The fields created by both the positive and negative charges would cancel to some degree, but due to the high orbital velocity of the negative electron relative to that of the positive proton, the induced field of the electron would dominate the resulting field. The field produced as a result of these charges would vary in proportion to the inverse square of the distance as gravity does. The field produced by the translational motion of the charges would vary inversely as the cube of distance. This concept totally unites the

electromagnetic and gravitational field theories and accounts for the strong and weak force within the atom.

Field Super-Position and the Vacuum Triode:

Electromagnetic induction with no measurable magnetic field is not new. It is well known that in the space surrounding a properly wound toroidal coil, there is no magnetic field. This is due to the superposition of the fields. However, when alternating current is surging through a transformer, an electric field surrounds it. When we apply the principle of super-position to the vacuum triode, it becomes more obvious how the device is operating.

The principle of super-position states that "in order to calculate the resultant intensity of superimposed fields, each field must be dealt with individually as though the others were not present" The resultant is produced by the vector addition of each of the fields considered on its own. Consider for a moment, the construction of the triode which includes two bi-filar coils located within the fields of two conditioned magnets. When the current in one half of the conductors in the coils (that is, just one strand of the twin windings in each coil) is increasing, both the current and the magnetic field follow the right-hand rule. The resulting motional E-field would be vertical to both and directed inwards. At the same time, the current in the other strand of each winding is decreasing and both the current and the magnetic field also follow the right-hand rule. The resulting motional E-field is again vertical to both, and directed inwards. So, the resultant combined field intensity is double the intensity produced by either one of the conductors considered on its own. Expressed mathematically, this is:

$$E = (B \times V) + (-B \times -V) \quad \text{or}$$

$$E = 2\,(B \times V) \;\ldots\ldots\ldots\ldots\ldots\ldots\ldots\ldots\; (2)$$

Where: E is the electric field intensity
B is the magnetic field intensity and
V is the electron drift velocity

(B x V), the first term in the equation, represents the flow of the magnetic field when the electrons are moving in one direction, while (-B x -V), the second term in the equation, defines the flow of the magnetic field when the electrons are moving in the other direction. This indicates that field intensity is directly proportional to the square of the current required by the load placed on the device. This is due to it's proportional relationship with the virtual value of the magnetic field which theory states is proportional to the current. Electrometer readings were always close to parabolic, indicating that the source was of infinite capacity. It was further determined through experiment, that the magnetic field does not change with temperature. Also, there is no reason yet identified, which would lead one to believe that electron drift velocity changes. It has been found remarkable that the vacuum triode runs approximately 20°F below ambient.

Induced Electromotive Force - Positive Energy:

When an e.m.f. ("electromotive force") is applied to a closed metallic circuit, current flows. The e.m.f. along a closed path "C" in space is defined as the work per unit charge (that is, W / Q) done by the electromagnetic fields on a small test charge moved along path C. Since work is the line integral of Force ("F"), the work per unit charge is the line integral of force per unit charge (in Newtons per Coulomb) we have:

$$\text{e.m.f.} = \int_C F / Q \;\times\; dtdl \;\; \text{volts} \;\ldots\ldots\ldots\ldots\ldots\ldots\; (3)$$

The scalar product "(F/Q) x dtdl" is the product of (F/Q) x Cosθ x dl where θ denotes the angle between the vectors F/Q and dl.

The electric force per unit charge is the electric field intensity ("E") in volts per metre. The magnetic force per unit charge is V x B where "V" denotes the velocity of the test charge in metres per second and "B" denotes the magnetic flux density in webers per metre squared. In terms of the smaller angle θ between V and B, the cross product of V and B is a vector having the magnitude VBSinθ. The direction of vector V x B is at right angles to the plane which contains vectors V and B in accordance with the right-hand rule (that is, V x B is in the direction of the thumb while the fingers curl through the angle θ from V towards B). Since the total force per unit charge is E + VB, the total e.m.f. in terms of the fields is:

$$\text{e.m.f.} = \int_C (E + V \times B)\, dt dl \ldots\ldots\ldots\ldots\ldots\ldots\ldots (4)$$

It appears from equation (4) that the e.m.f. depends on the forward velocity with which the test charge moves along the path C. This, however, is not the case. If V and dl in equation (4) have the same direction, then their associated scalar product is zero. So, only the component of V which is not aligned with dl (that is, with $\theta = 0$), can contribute to the e.m.f. This component has value only if the differential path length dl has a sideways motion. So, V in equation (4), represents the sideways motion of dl, if there is any. The fields E and B in equation (4) could well be represented as functions of time as well as functions of the space co-ordinates. In addition, the velocity V of each differential path length dl, may vary with time. However, equation (4) correctly expresses the e.m.f. or voltage drop along path C as a function of time. That component of the e.m.f. consisting of the line integral V x B is the motional E-field since it has value only when path C is ,moving through a magnetic field, traversing lines of magnetic flux. For stationary paths, there is no motional E-field and the voltage drop is simply the integral of the electric field "E". Devices which separate charges, generate e.m.f.s and a familiar example of this is a battery which utilises chemical forces to separate charge. Other examples include the heating of a thermocouple, exposure of a photovoltaic cell to incident light or the rubbing together of different material to produce electrostatic charge separation. Electric fields are also produced by time-varying magnetic fields. This principle is already exploited extensively in the production of electrical power by the utility companies.

The line integral of electric field intensity "E" around any closed path "C" equals $-d\varphi/dt$ where φ represents the magnetic flux over any surface "S" having the closed path "C" as it's contour. The positive side of the surface S and the direction of the line integral around contour C, are related by the right-hand rule (the curled fingers are oriented so as to point around the loop in the direction of integration and the extended thumb points out the positive side of the surface S). The magnetic flux φ is the surface integral of magnetic flux density "B" as shown here:

$$\varphi = \iint_S B \times ds \quad \text{webers} \ldots\ldots\ldots\ldots\ldots (5)$$

In Equation (5), the vector differential surface "ds" has an area of ds and in direction, it is perpendicular to the plane of ds, projecting out of the positive side of that surface. The partial time derivative of φ is defined as:

$$\frac{\partial \varphi}{\partial t} = \iint_S \frac{\partial b}{\partial t} \times ds \quad \text{volts} \ldots\ldots\ldots\ldots\ldots\ldots\ldots (6)$$

This is referred to as the <u>magnetic current</u> through surface S. For a moving surface S, the limits of the surface integral in equation (6) are functions of time, but the equation still applies. It is important to clarify at this point, that when we evaluate the value of $d\varphi/dt$ over a surface which is moving in proximity to magnetic field activity, <u>we treat the surface as though it were stationary for the instant under consideration</u>. The partial time derivative of φ, is the time rate of change of flux through surface S, due only to the changing magnetic field density B. Any increase of φ due to the motion of the surface in the B-field, is <u>not</u> included in that calculation.

Continuing this discussion leads us to note that an electric field must be present in any region containing a time-varying magnetic field. This is shown by the following equation:

$$\oint_C E \times dl = \frac{-\partial \varphi}{\partial t} \quad \ldots\ldots\ldots\ldots\ldots\ldots\ldots (7)$$

In this equation, φ is the magnetic flux in webers out of the positive side of any surface having path C as its contour. Combining equations (7) and (4), we are able to calculate the e.m.f. about a closed path C as shown here:

$$\text{e.m.f.} = \oint_C E \times dl + (V \times B)\, dl \quad \ldots\ldots\ldots\ldots\ldots\ldots (8)$$

or in another form:

$$\text{e.m.f.} = \frac{-\partial\varphi}{\partial t} + \oint_C (V \times B)\, dl \quad \ldots\ldots\ldots\ldots\ldots\ldots (9)$$

So, the e.m.f. around a closed path consists in general of two components. The component dφ/dt is the variational e.m.f. and the second component is the motional E-field. In equation (9), (V x B)dl can, by means of a vector identity, be replaced with B x (V x dl)A. V is the sideways velocity of d: the vector V x dl has magnitude Vdl and a direction normal to the surface ds swept out by the moving length dl in time dt. Letting Bn denote the component of B normal to this area, we can see that the quantity -B x (V x dl) becomes -BnVdl and equation 9 can be re-written as:

$$\text{e.m.f.} = \frac{-\partial\varphi}{\partial t} + \oint_C Bn\ V\ dl \quad \ldots\ldots\ldots\ldots\ldots\ldots (10)$$

Clearly, the integral of BnV around the closed contour C with sideways velocity of magnitude V for each length dl traversed, is simply the time rate of change of the magnetic flux through the surface bounded by C. This change is directly due to the passage of path C through lines of magnetic flux. Hence, the complete expression for e.m.f. in equation (10) is the time rate of change of the magnetic flux over any surface S, bounded by the closed path C, due to the changing magnetic field and the movement of the path through the magnetic field. Equation (10) may be written:

$$\text{e.m.f.} = -d\varphi / dt \quad \ldots\ldots\ldots\ldots\ldots\ldots (11)$$

Note: The distinction between equations (7) and (11) is that equation (7) contains only the variational e.m.f. while equation (11) is the sum of the variational and motional e.m.f. values. In equation (7), the partial time derivative of magnetic flux φ is the rate of flux change due only to the time-varying magnetic field, while equation (11) includes the total time derivative of the rate of flux change due to the time-varying magnetic field and path C's passage through the magnetic field. If the closed path C is not passing through lines of magnetic flux, then equation (7) and equation (11) are equivalent.

It is also important to point out that dφ/dt in equation (11) does not necessarily mean the total time rate of change of the flux φ over the surface S. For example, the flux over surface S is bounded by the closed contour C of the left portion of the electric circuit shown in Fig.1.

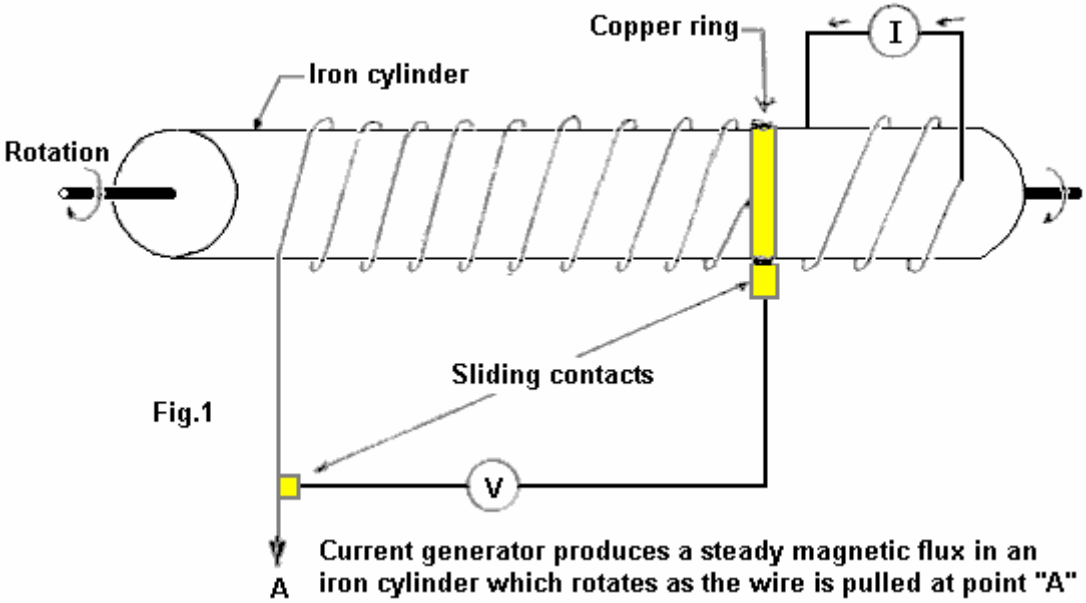

Fig.1

The flux is changing as the coil is unwound by the rotation of the cylinder, as illustrated. However, since B is static, there is no variational e.m.f. and since the conductors are not modulating lines of flux, there is

no motional e.m.f. Thus, dφ/dt in equation (11) is zero, even though the flux is changing with time. Note that dφ/dt was defined as representing the right hand part of the expression in equation (10) and dφ/dt must not be interpreted more broadly than that.

In the application of the present equations, it is required that all flux densities and movements are referred to a single, specified co-ordinate system. In particular, the velocities will all be with respect to this system alone and not interpreted as relative velocities between conductors or moving lines of flux. The co-ordinate system is selected arbitrarily and the magnitudes of variational and motional fields depend upon the selection.

Example 1:

A fundamental electric generator is shown in Figure 2:

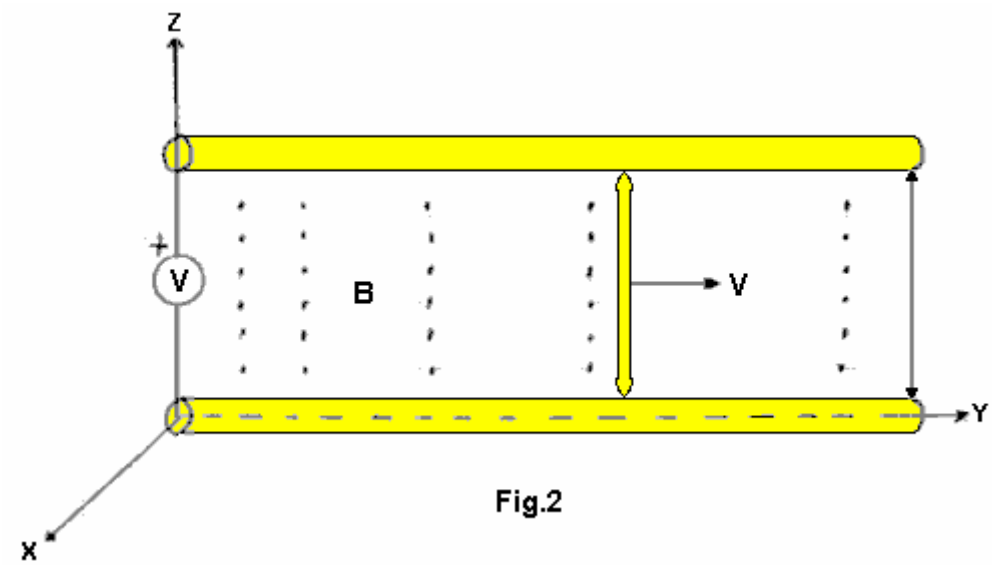

Fig.2

The parallel, stationary conductors, separated by distance "l", have a stationary voltmeter connected across them. The circuit is completed by a moving conductor connected to the parallel conductors by means of two sliding contacts. This conductor is connected at y = 0 at time t = 0, and it moves to the right at a constant velocity V = Vay. The applied flux B is represented by dots on Fig.2 and has a magnitude of $B = B_O$ CosBy Coswt ax. The unit vectors in the direction of the co-ordinate axes are ax, ay and az respectively.

Solution: Let S denote the plane rectangular surface bounded by the closed electric circuit, with a positive side selected as the side facing you. The counter-clockwise e.m.f. around the circuit is dφ/dt with φ signifying the magnetic flux out of the positive side of S (As ds = 1 dy ax). The scalar product B x ds is B_O l CosBy, Coswt dy; integrating from y = 0 to y = y gives:

$$\varphi = B_0 l \sin By_1 \cos wt \quad \ldots\ldots\ldots\ldots\ldots\ldots\ldots (12)$$

With y_1 denoting the instantaneous y position of the moving wire. The counter-clockwise e.m.f. is found by replacing y with vt and evaluating dφ/dt. The result is:

$$\text{e.m.f.} = wB_0 l \,/\, B\sin Bvt \sin wt - B_0 l v \cos Bvt \cos wt \quad \ldots\ldots\ldots\ldots\ldots (13)$$

The variational (transformer) component is determined with the aid of equation (12) and is $wB_Ol/B\sin By$ sinwt where y = vt. This is the first component on the right hand side of equation (13).
Note: y_1 was treated as a constant when evaluating the partial time derivative of φ.

The motional E-field is the line integral of V x B along the path of the moving conductor. As V x B is $-B_O$ $v\cos By_1$ coswt ax and As dl is dz ax, evaluation of the integral $-B_O$ $v\cos By_1$ coswt dz from Z = 0 to Z = 1 results in a motional E-field of $-B_O$ $lv\cos Bv_1$ coswt. This component results from modulation of the lines of flux by the moving conductor. If the voltmeter draws no current, there can be no electromagnetic force on the free electrons of the wire. Therefore, the e.m.f. along the path of the metal conductors including the moving conductor, is zero.

Example 2:

Suppose the conductor with the sliding taps is stationary (V = 0) and it is located at $y = y_1$. Also, suppose that the magnetic field B is produced by a system of moving conductors which are not shown in Fig.2 and those conductors are travelling with a constant velocity V = Vay. At time t = 0, the magnetic field B is B_O sinBy ax. Determine the voltage across the voltmeter.

Solution: There is no motional E-field because the conductors in Fig.2 are at rest (stationary) with respect to our selected co-ordinate system. However, the magnetic field at points fixed with respect to the co-ordinate system is changing with time and as a result, there is a variational e.m.f. Since the B-field at time t = 0 is B_O sinBy ax and has a velocity of V = Vay, it can be calculated that the B-field as a function of time is BOsin[B(y-vt)] ax. This is verified by noting that an observer located at time t = 0 who is travelling at the constant velocity (V = Vay) of the moving current, would have a y co-ordinate of y = y + Vt and an accordingly different expression for B. He would observe a constant field where the magnetic current density is:

$$\frac{\partial B}{\partial t} = -BvB_o \cos B(y - Vt)\, ax$$

The counter-clockwise e.m.f. can be arrived at by taking the negative of an integral of the above expression for the rectangular surface bounded by the electric circuit with the positive side facing you, with the limits of zero and y. The resulting e.m.f. equals:

$$B_o lv[\sin B(y_1 - vt) + \sin Bvt]$$

which is the voltage across the meter.

Induced Motional Field - Negative Energy:

Conventional theory says that electric fields and magnetic fields are different things. Consider for a moment, a charge with an electric field around it. If the charge is moved, then a magnetic field develops and the moving charge constitutes a current. If an observer were to move along with the charge, then he would see no relative motion, no current and no magnetic field. A stationary observer would see motion, current and a magnetic field. It would appear that a magnetic field is an electric field observed from a motional reference frame. Similarly, if we take a mass with a gravity field around it, and we move the mass and create a mass current, a new field is also created. It is a different kind of gravity field with no source and no sink. It is called the "Protational field" and is also known as the "Lense-Thirring Effect". This field and it's governing principles will form the basis for future anti-gravitational devices (see figures 1 to 4).

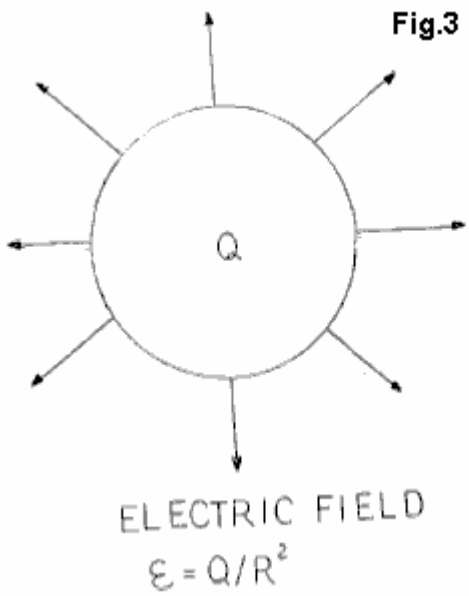

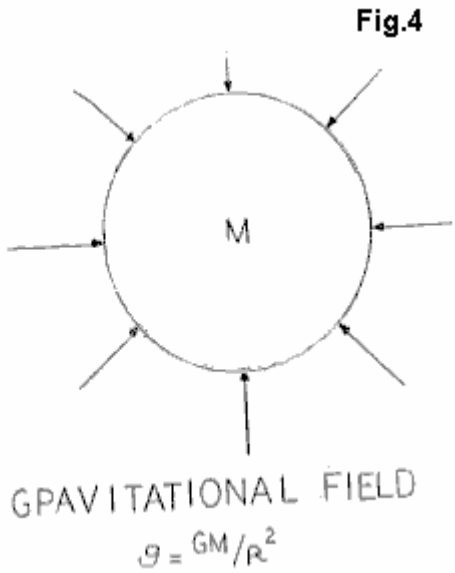

Within the confined are of the Vacuum Triode box, the space-time continuum is reversed by the fields which are produced in the presence of excited coherent space flux quanta. These quanta have been attracted form, and ultimately extracted from the virtual vacuum, the infinitely non-exhaustible Diac Sea. For a more detailed mathematical format see Tom Bearden's paper "The Phase Conjugate Vacuum Triode" (23rd April 1987). Much of the theory which likely applies to the vacuum triode has been developed in the field of phase-conjugate optics.

With regards to over-unity phenomena, it is important to note that so long as positive energy is present in a positively-flowing time regime, then unity and over-unity power gains are not possible. The summation of the losses due to resistance, impedance, friction, magnetic hysteresis, eddy currents and windage losses of rotating machinery will always reduce overall efficiency below unity for a closed system. The laws of conservation of energy always apply to all systems. However, the induced motional E-field changes the system upon which those laws need to be applied. Since the vacuum triode operates in more than four dimensions and provides a link between the multi-dimensional reality of the quantum state and the Dirac Sea, we are now dealing with an open-ended system and not the "closed system" within which all conservation and thermodynamic laws were developed.

To achieve unity, the summation of all magnetic and ohmic losses must equal zero. To achieve this state, negative energy and negative time need to be created. When this is achieved, all ohmic resistance becomes zero and all energy then flows along the outside of conductors in the form of a special space field. Negative energy is fully capable of lighting incandescent lights, running motors and performing all of the functions of positive energy tested to date. When run in parallel with positive energy however, cancellation (annihilation) of opposing power types occurs. This has been fully tested in the laboratory.

Once unity has been achieved and the gate to the Dirac sea opened, over-unity is affected by loading the open gate more and more, which opens it further to the point where direct communication / interaction with the nucleus of the atom itself is achieved. Output of the vacuum triode is not proportional to the excitation input as the output produced by the device is directly proportional to the load which is placed on it. That load is the only dependent variable for device output. The triode's output voltage and frequency always remains constant due to the conditioning of the motional E-field in the permanent magnets and the small regulated excitation signal which is provided through a small oscillator. Regulation remains constant and the triode output looks into an in-phase condition ($\cos\theta$=1 Kvar=1) under all load characteristics.

the vacuum triode is a solid-state device consisting of conditioned permanent magnets capable of producing a motional field. This field opens the gate to the Dirac Sea from where negative energy flows into the triode's receiving coils. The coils are wound with very small-diameter wire but in spite of that, they are capable of producing more than 5 kilowatts of useful power. This in itself, is a clear indicator that the type of electrical energy collected by the device is not conventional electrical energy. The wire sizes used in the construction of the device would not be capable of carrying such large currents without excessive heat gain, however, the triode's coils actually run cooler when loaded at 5 kilowatts.

The fundamental magnets have been broken free of the binding forces which constrained them to be steady-state single-pole uniform magnetic flux devices. They are now able to simply support mass, as demonstrated with the transformer steel illustration. They can now easily be made to adopt a dynamic motional field by applying a tiny amount of excitation. Specifically, 1 milliamp at 10 volts (10 milliwatts) of excitation at 60 Hz enables the coils of the triode to receive from the Dirac Sea, more than 5,000 watts of usable negative energy. It has not yet been determined how much more energy can be safely removed.

Meguer Kalfaian's Energy Generator

There is a patent application which has some very interesting ideas and claims. It has been around for a long time but it has not been noticed until recently. Personally, I get the impression that it is more a concept rather than a solidly based prototype-proven device, but that is only my impression and you need to make up your own mind on the matter.

Patent Application GB 2130431A **31st May 1984** **Inventor: Meguer Kalfaian**

Method and means for producing perpetual motion with high power

ABSTRACT

The perpetual static energies, as provided by the electron (self spin) and the permanent magnet (push and pull) are combined to form a dynamic function. Electrons emitted from a heated coil **F** are trapped permanently within the central magnetic field of a cylindrical magnet **M5**. A second magnet **M6**, in opposite polarity to the poles of the electrons causes polar tilt, and precession. This precession radiates a powerful electromagnetic field to a coil **L** placed between the cylindrical magnet and a vacuum chamber **C** - wound in a direction perpendicular to the polar axes of the electrons. Alternatively, the electromagnetic radiation is emitted as coherent light. The original source of electrons is shut off after entrapment.

SPECIFICATION

Method and means for producing perpetual motion with high power. This invention relates to methods and means for producing perpetual motion. An object of the invention is, therefore, to produce useful perpetual motion for utility purposes.

BRIEF EMBODIMENT OF THE INVENTION

The electron has acquired self spin from the very beginning of its birth during the time of creation of matter, and represents a perpetual energy. But self spin alone, without polar motion is not functional, and therefore, useful energy cannot be derived from it. Similarly, the permanent magnet represents a source of perpetual energy, but since its poles are stationary, useful energy cannot be derived from it.

However, the characteristics of these two types of static energies differ one from the other, and therefore the two types of energies can be combined in such a manner that, the combined output can be converted into perpetual polar motion.

In one exemplary mode, a cylindrical vacuum chamber having a filament and a cathode inside, is enclosed within the central magnetic field of a cylindrical permanent magnet, the magnetisation of which can be in a direction either along the longitudinal axis, or from the centre to the circumferential outer surface of the cylinder. When current is passed through the filament, the electrons emitted from the cathode are compressed into a beam at the centre of the cylindrical chamber by the magnetic field of the cylindrical magnet. Thus, when the current through the filament is shut off, the electrons in the beam remain permanently trapped inside the magnetic field.

In such an arrangement, the poles of the electrons are aligned uniformly. When a second permanent magnet is held against the beam in repelling polarity, the poles of the electrons are pushed and tilted from their normal longitudinal polar axes. In such tilted orientations, the electrons now start wobbling (precessing) in gyroscopic motions, just like a spinning top when it is tilted to one side. The frequency of this wobbling (precessional resonance) depends upon the field strengths of the two magnets, similar to the resonance of the violin string relative to its tensional stretch. The polar movements of the electrons radiate an electromagnetic field, which can be collected by a coil and then converted into any desired type of energy. Because of the uniformly aligned electrons, the output field is coherent, and the output power is high.

Observed examples upon which the invention is based:

The apparatus can best be described by examples of a spinning top in wobbling motion. Thus, referring to the illustration of **Fig.1**, assume that the spinning top **T** is made of magnetic material, as indicated by their pole signs (**S** and **N**). Even though the top is magnetic, the spin motion does not radiate any type of field, which can be received and converted into a useful type of energy. This is due to the known fact that, radiation is created only when the poles of the magnet are in motion, and in this case, the poles are stationary.

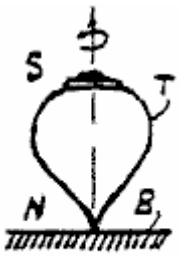

Fig. 1

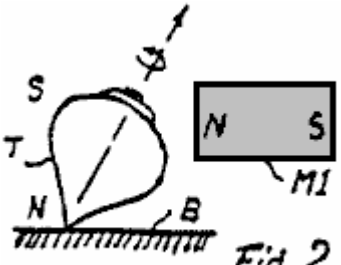

Fig. 2

When a magnet **M1** is held from a direction perpendicular to the longitudinal polar axis of the top, as shown in **Fig.2**, the polar axis of the top will be tilted as shown, and keep on spinning in that tilted direction. When the magnet **M1** is removed, however, the top will try to regain its original vertical posture, but in doing so, it will wobble in gyroscopic motion, such as shown in **Fig.3**. The faster the top spins, then the faster the wobbling motion will be.

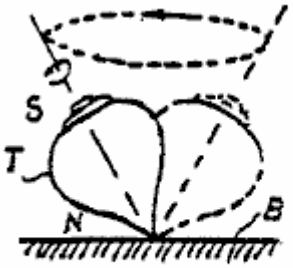

Fig. 3

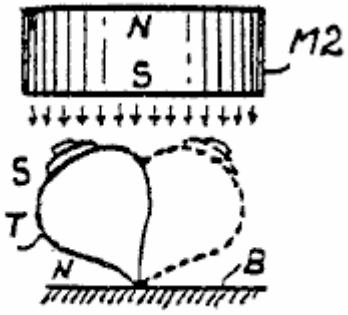

Fig. 4

The reason that the top tilts angularly, but does not wobble when the magnet **M1** is held from horizontal direction, is that, the one-sided pull prevents the top from moving away from the magnetic field for free circular wobble. Instead of holding the magnet **M1** from the side of the top, we may also hold the magnet from a direction above the top, as shown in **Fig.4**. In this case, however, the polar signs between the magnet and the top are oriented in like signs, so that instead of pulling action, there is pushing action between the magnet and the top - causing angular tilt of the top, such as shown in **Fig.4**. The pushing action of the magnetic field from above the top is now equalised within a circular area, so that the top finds freedom to wobble in gyroscopic rotation.

The important point in the above given explanation is that, the top tries to gain its original vertical position, but it is prevented from doing so by the steady downward push from the static magnetic field of magnet **M2**. So, as long as the top is spinning, it will wobble in a steady state. Since there is now, polar motion in the wobbling motion of the top, this wobbling motion can easily be converted into useful energy. To make this conversion into perpetual energy, however, the top must be spinning perpetually. Nature has already provided a perpetually spinning magnetic top, which is called, "the electron" - guaranteed to spin forever, at a rate of 1.5×10^{23} (one hundred fifty thousand billion billion revolutions per second).

BRIEF DESCRIPTION OF THE DRAWINGS

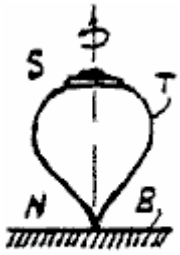

Fig. 1

Fig.1 illustrates a magnetic spinning top, used to describe the basic principles of the invention.

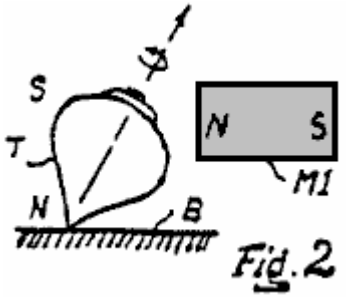

Fig.2 illustrates a controlled top for describing the basic principles of the invention.

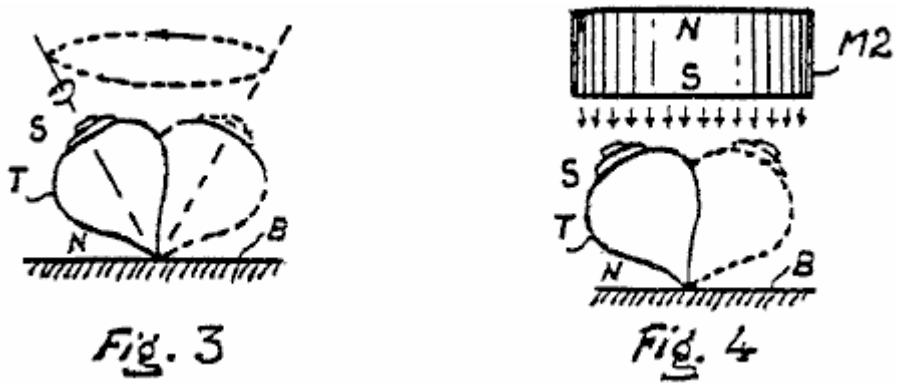

Fig.3 and **Fig.4** illustrate spinning tops in wobbling states for describing the basic principles of the invention.

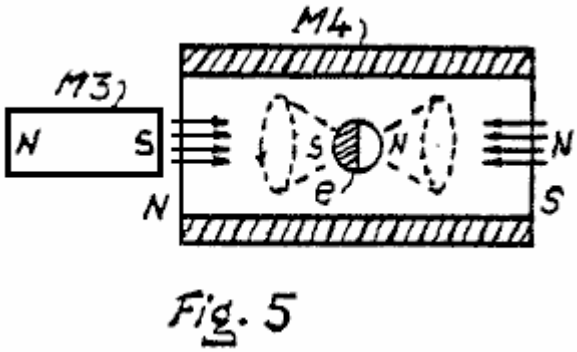

Fig.5 shows how an electron can be driven into a wobbling state under the control of permanent magnets.

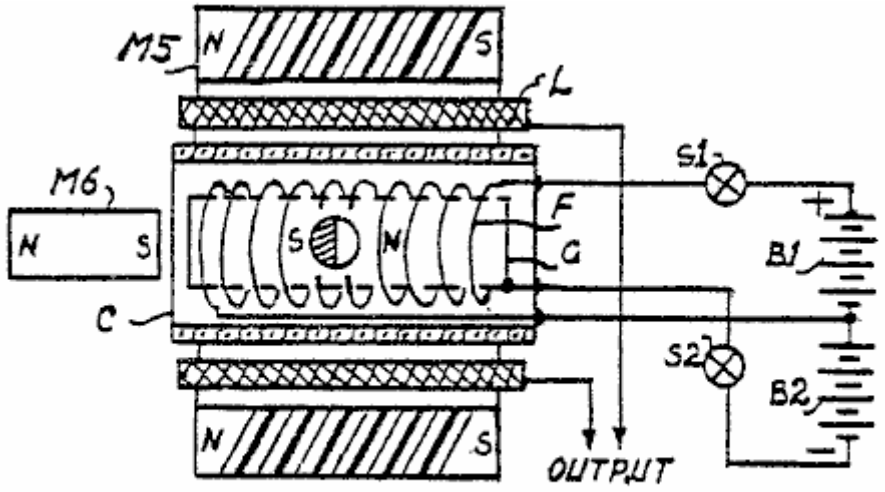

Fig. 6

Fig.6 is a practical arrangement for obtaining perpetual motion.

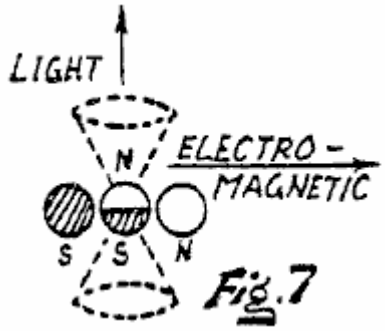

Fig. 7

Fig.7 shows a natural atomic arrangement for obtaining precessional resonance.

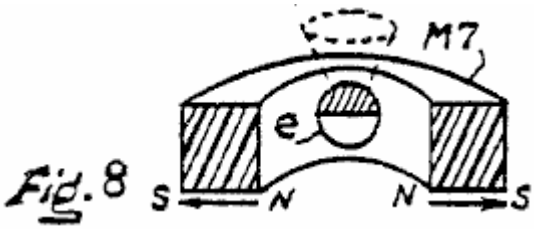

Fig. 8

Fig.8 shows a different type of electron trapping permanent magnet, to that used in **Fig.6**.

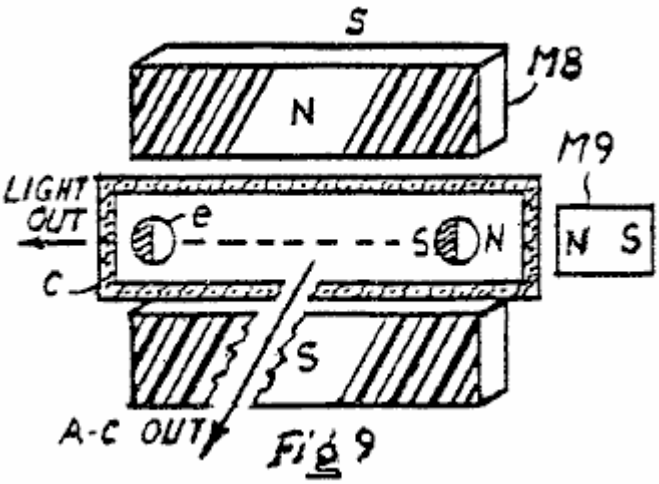

Fig 9

Fig.9 is a modification of **Fig.6**; and

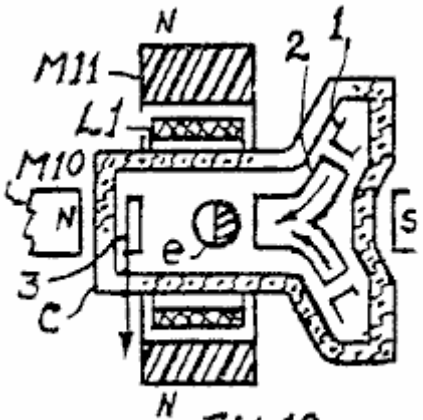

Fig. 10

Fig.10 is a modification of the electron trapping magnets, used in **Fig.6**.

BEST MODE OF CARRYING OUT THE INVENTION

Referring to the exemplary illustration of **Fig.4**, the spinning top **T** is pivoted to the base B by gravity.

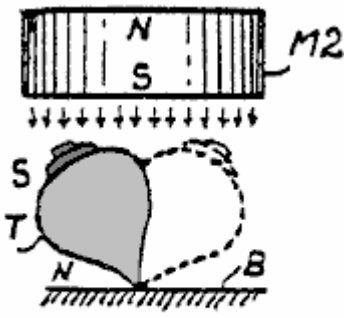

Fig. 4

In the case of the electron, however, it must be held tightly between some magnetic forces. So, referring to the illustration of **Fig.5**, assume that an electron **e** is placed in the centre of a cylindrical magnet **M4**. The direction of

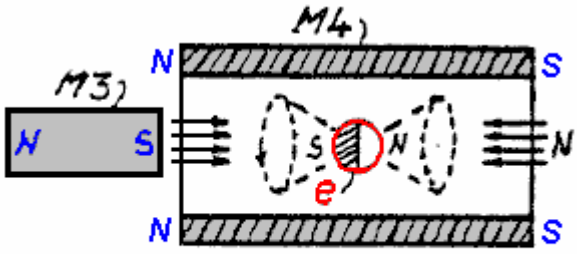

Fig. 5

magnetisation of the magnet **M4**, and the polar orientation of the electron **e** are marked in the drawing. In this case, when a permanent magnet **M3** is placed at the open end of the cylindrical magnet **M4**, the electron **e** will precess, in a manner, as described by way of the spinning top. The difficulty in this arrangement is that, electrons cannot be separated in open air, and a vacuum chamber is required, as in the following:

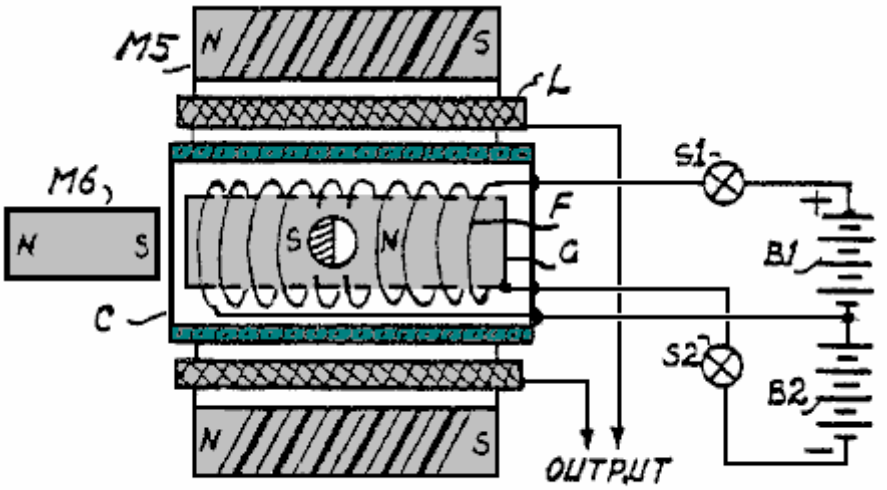

Fig. 6

Fig.6 shows a vacuum chamber **C**, which contains a cylindrically wound filament **F**, connected to the battery **B1** by way of the switch **S1**. Thus, when the switch **S1** is turned ON, the filament **F** is lighted, and it releases electrons. External to the vacuum chamber **C** is mounted a cylindrical permanent magnet **M5**, which compresses the emitted electrons into a beam at the centre of the chamber.

When the beam is formed, the switch is turned OFF, so that the beam of electrons is permanently trapped at the centre of the chamber.

The permanent trapping of the electrons in the chamber **C** represents a permanent storage of static energy. Thus, when a permanent magnet **M6** is placed to tilt the polar orientations of the uniformly poled electrons in the beam, they start precessing perpetually at a resonant frequency, as determined by the field strengths of the magnets **M5** and **M6**.

The precessing electrons in the beam will radiate quadrature phased electromagnetic field in a direction perpendicular to the polar axes of the electrons.

Thus, a coil **L** may be placed between the magnet **M5** and the vacuum chamber **C**, to receive the radiated field from the beam. The output may then be utilised in different modes for practical purposes, for example, rectified for DC power use.

The electron beam-forming cylindrical magnet **M5**, which may also be called a focusing magnet, is shown to be bipolar along the longitudinal axis. The direction of magnetisation, however, may be from the central opening to

the outer periphery of the magnet, as shown by the magnet **M7**, in **Fig.8** but the precessing magnet **M6** will be needed in either case.

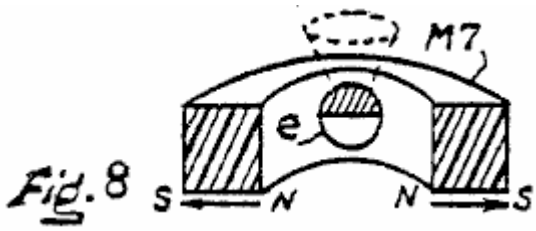

Fig. 8

In the arrangement of **Fig.6**, I have included a current control grid **G**. While it is not essential for operation of the arrangement shown, it may be connected to a high negative potential **B2** by the switch **S2** just before switching the **S1** in OFF position, so that during the cooling period of the filament, there will occur no escape of any electrons from the beam to the cathode. Also, the grid **G** may be switched ON during the heating period of the cathode, so that electrons are not forcibly released from the cathode during the heating period, and thereby causing no damage to the cathode, or filament.

Biological precessional resonance

Electron precessional resonance occurs in living tissue matter, as observed in laboratory tests. This is called ESR (Electron Spin Resonance) or PMR (Paramagnetic Resonance). In tissue matter, however, the precessing electron is entrapped between two electrons, as shown in **Fig.7**, and the polar orientations are indicated by the polar signs and shadings, for clarity of drawing.

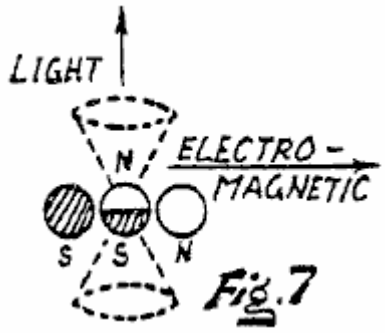

Fig. 7

Simulation

The arrangement of **Fig.7** may be simulated artificially in a manner as shown in **Fig.9**, wherein, the electron trapping magnet is a pair of parallel spaced magnets **M8**. In actual practice, however, the structure of this pair of magnets **M8** can be modified. For example, a second pair of magnets **M8** may be disposed between the two pairs, so that the directions of the transverse fields between the two pairs cross mutually perpendicular at the central longitudinal axis of the vacuum chamber. The inner field radiating surfaces of these two pairs of magnets may be shaped circular, and the two pairs may be assembled, either by physical contact to each other, or separated from each other.

Modifications

Referring to the arrangements of **Fig.6**, **Fig.9** and **Fig.10**, when the electron is in precessional gyroscopic motion, the radiated field in a direction parallel to the polar axis of the electron, is a single phased corkscrew waveform, which when precessed at light frequency, the radiation produces the effect of light.

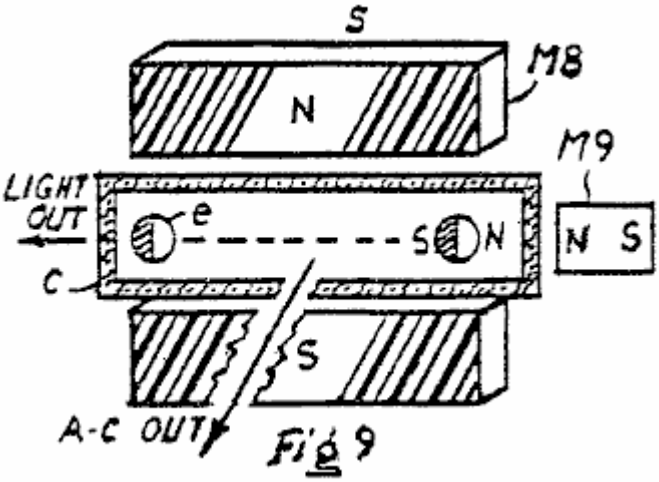

Fig 9

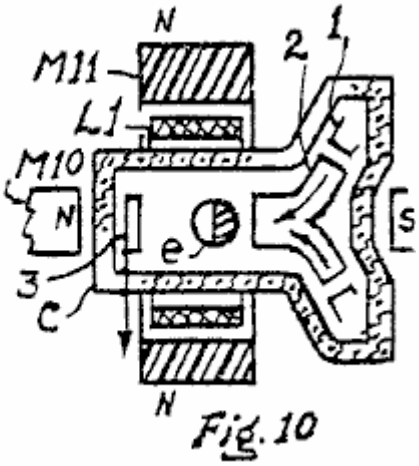

Fig. 10

Whereas, the field in a direction perpendicular to the axis of the electron produces a quadrature phased electromagnetic radiation. Thus, instead of utilising the output of electron precession for energy purposes, it may be utilised for field radiation of either light or electromagnetic waves, such as indicated by the arrows in **Fig.9**. In this case, the output will be coherent field radiation.

In reference to the arrangement of **Fig.6**, the electron emission is shown to occur within the central magnetic field of the focusing magnet **M5**. It may be practically desired, however, that these electrons are injected into the central field of the cylindrical magnet from a gun assembly, as shown in an exemplary arrangement of **Fig.10**. In this case, the vacuum chamber **C** is flanged at the right hand side, for mounting an electron emitting cathode **1** (the filament not being shown), and a curved electron-accelerating gun **2**. The central part of this flange is recessed for convenience of mounting an electron-tilting magnet (as shown), as close as possible to the electron beam. In operation, when current is passed through the filament, and a positive voltage is applied (not shown) to the gun **2**, the emitted electrons from the cathode are accelerated and injected into the central field of the magnet **11**. Assuming that the open end of the gun **2** overlaps slightly the open end of the cylindrical central field of the magnet **M1**, and the positive accelerating voltage applied to the gun **2** is very low, the accelerated electrons will enter the central field of the magnet **M1**, and travel to the other end of the field. Due to the low speed acceleration of the electrons, however, they cannot spill out of the field, and become permanently entrapped therein.

In regard to the direction in which the coil **L1** is positioned, its winding should be in a direction perpendicular to the longitudinal axis of the beam to which the polar axes of the electrons are aligned uniformly in parallel. In one practical mode, the coil **L1** may be wound in the shape of a surface winding around a tubular form fitted over the cylindrical vacuum chamber.

In regard to the operability of the apparatus as disclosed herein, the illustration in **Fig.7** shows that the field output in a direction parallel to the polar axis of the electron is singular phased, and it produces the effect of light when the precessional frequency is at a light frequency. Whereas, the output in a direction perpendicular to the polar axis of the electron is quadrature phased, which is manifested in practiced electromagnetic field transmission.

In regard to experimental references, an article entitled "Magnetic Resonance at high Pressure" in the "Scientific American" by George B. Benedek, page 105 illustrates a precessing nucleus, and indicates the direction of the electromagnetic field radiation by the precessing nucleus. The same technique is also used in the medical apparatus "Nuclear magnetic resonance" now used in numerous hospitals for imaging ailing tissues (see "High Technology" Nov. Dec. 1982. Refer also to the technique of detecting Electron Spin Resonance, in which electrons (called "free radicals") are precessed by the application of external magnetic field to the tissue matter. In all of these practices, the electromagnetic field detecting coils are directed perpendicular to the polar axes of the precessing electrons or the nuclei.

In regard to the production of light by a precessing electron, in a direction parallel to the polar axis of the precessing electron, see an experimental reference entitled "Free electrons make powerful new laser" published in "high Technology" February 1983 page 69.

In regard to the aspect of producing and storing the electrons in a vacuum chamber, it is a known fact by practice that the electrons are entrapped within the central field of a cylindrical permanent magnet, and they will remain entrapped as long as the magnet remains in position.

With regard to the performance of obtaining precessional resonance of the electron, the simple example of a

wobbling top is sufficient, as proof of operability.

Having described the preferred embodiments of the invention, and in view of the suggestions of numerous possibilities of modifications, adaptations, adjustments and substitutions of parts, it should be obvious to the skilled in related arts that other possibilities are within the spirit and scope of the present invention.

CLAIMS

1. The method of effecting perpetual retaining and precession of electrons, for obtaining perpetual field radiation from the polar motions of said precessing electrons, comprising the steps of:

producing electrons;
compressing said produced electrons into a perpetually retainable state; and
precessing said compressed electrons for effecting perpetual field radiation by the polar motions of said precessing electrons.

2. The method of producing perpetual field radiation for conversion into perpetual energy, the method comprising the steps of:

producing electrons;
imposing a first perpetually occurring electron controlling force from a first direction upon said produced electrons into a perpetually retainable state; and
imposing a second perpetually occurring electron controlling force from a second direction upon said retained electrons, for inducing precessional motions to the electrons, and thereby obtaining said perpetual field radiation for conversion into perpetual energy.

3. The method of generating perpetual simultaneous single phased and quadrature phased coherent field radiations, comprising the steps of:

producing electrons;
imposing a first perpetually occurring electron controlling force from a first direction upon said produced electrons into a uniformly polarised perpetually retainable compressed state; and
imposing a second perpetually occurring electron controlling force from a second direction upon said compressed electrons, for effecting precessional motions of the electrons, thereby causing a quadrature phased coherent field radiation in a direction perpendicular to the uniformly polarised polar axes of said electrons, and a simultaneous single phased coherent field in a direction parallel to the polar axes of said electrons.

4. The method of producing perpetual dynamic motions for conversion into energy, comprising the steps of:

trapping and compressing a concentrated quantity of electrons within a first electron controlling field in a vacuum space, whereby forming a tightly confined permanent concentration of statistically spinning electrons, both of their polar axes and polar orientations being uniformly aligned; and
tilting the polar axes of said trapped electrons by a second permanent electron controlling field, for inducing precessional gyrations to the electrons in the form of perpetual dynamic motions, which are adaptively convertible into energy.

5. Apparatus for producing perpetual dynamic motions, which comprises:

a vacuum chamber having an electron-emitting means; an auxiliary means for causing emission of electrons from said electron-emitting means;
a first permanent magnet disposed externally of said chamber for trapping and compressing a quantity of said emitted electrons within its magnetic field, with uniform alignments of the polar axes and polar orientations of said electrons;
means for stopping said auxiliary means from further causing emission of electrons from said electron emitting means, whereby forming a tightly confined concentration of statistically spinning electrons permanently entrapped within said first permanent magnet; and
a second permanent magnet, the field projection of which is oriented to tilt the polar a axes of said trapped electrons, for causing precessional gyrations of the electrons, as representation of said dynamic motions.

6. Apparatus comprising:
a vacuum chamber having an electron emitting means;

an auxiliary means for causing emission of electrons from said electron emitting means;
a first permanent magnet disposed externally of said chamber for permanently trapping and compressing a quantity of said emitted electrons within its magnetic field, with uniform alignments of the polar axes and polar orientations of said electrons; and
a second permanent magnet so oriented with respect to said entrapped electrons that, the field projection from the second magnet causes precessional gyrations of the uniformly aligned entrapped electrons.

7. The apparatus as set forth in claim 6, wherein said first permanent magnet is cylindrical magnet surrounding said chamber, and the magnetisation of said first magnet is in a direction along the longitudinal axis of the cylinder.

8. The apparatus as set forth in claim 6, wherein said first permanent magnet is cylindrical magnet surrounding said chamber, and the magnetisation of said first magnet is in a direction from the central hollow space to the outer surface of said cylinder.

9. The apparatus as set forth in claim 6, wherein the polar sign of field projection from said second magnet to said entrapped electrons is in repelling polar sign.

10. The apparatus as set forth in claim 6, wherein is included a field responsive coil mounted between said first magnet and said vacuum chamber, for receiving the field radiation that is effected by the motions of said gyrating electrons.

11. The apparatus as set forth in claim 6, wherein is included a field responsive coil mounted between said first magnet and said vacuum chamber, the turns of winding of said coil being in a direction perpendicular to the polar axes of said compressed electrons.

12. Apparatus for producing perpetual motion, the apparatus being substantially as hereinbefore described with reference to, and as illustrated by, the accompanying drawings.

US Patent App. 20090096219 16th April 2009 Inventors: Theodore Annis & Patrick Eberly

ENERGY GENERATION APPARATUS AND METHODS BASED UPON MAGNETIC FLUX SWITCHING

ABSTRACT

Methods and apparatus generate electricity through the operation of a circuit based on a single magnetic flux path. A magnetisable member provides the flux path. One or more electrically conductive coils are wound around the member, and a reluctance or flux-switching apparatus is used to control the flux. When operated, the switching apparatus causes a reversal of the polarity (direction) of the magnetic flux of the permanent magnet through the member, thereby inducing alternating electrical current in each coil. The flux-switching apparatus may be motionless or rotational. In the motionless embodiments, two or four reluctance switches are operated so that the magnetic flux from one or more stationary permanent magnet(s) is reversed through the magnetisable member. In alternative embodiments, the flux-switching apparatus comprises a body composed of high-permeability and low-permeability materials, such that when the body is rotated, the flux from the magnet is sequentially reversed through the magnetisable member.

FIELD OF THE INVENTION

The present invention relates to methods and apparatus wherein the magnetic flux from one or more permanent magnets is reversed repeatedly in polarity (direction) through a single flux path around which there is wound a conducting coil or coils for the purpose of inducing electricity in the coils.

BACKGROUND OF THE INVENTION

The electromechanical and electromagnetic methods involved in motional electric generators and alternators are well known. Alternators and generators often employ permanent magnets and usually have a rotor and a stator and a coil or coils in which an EMF (electromotive force) is induced. The physics involved for producing electricity is described by the generator equation $V = \int(v \times B).dl$.

Permanent magnets made of materials that have a high coercively, a high magnetic flux density a high magnetic motive force (mmf), and no significant deterioration of magnetic strength over time are now common. Examples include ceramic ferrite magnets (Fe_2O_3); samarium cobalt ($SmCO_5$); combinations of iron, neodymium, and boron; and others.

Magnetic paths for transformers are often constructed of laminated ferrous materials; inductors often employ ferrite materials, which are used for higher frequency operation for both devices. High performance magnetic materials for use as the magnetic paths within a magnetic circuit are now available and are well suited for the (rapid) switching of magnetic flux with a minimum of eddy currents. An example is the FINEMET® nanocrystalline core material made by Hitachi of Japan.

According to Moskowitz, "Permanent Magnet Design and Application Handbook" 1995, page 52, magnetic flux may be thought of as flux lines which always leave and enter the surfaces of ferromagnetic materials at right angles, which never can make true right-angle turns, which travel only in straight or curved paths, which follow the shortest distance, and which follow the path of lowest reluctance.

A "reluctance switch" is a device that can significantly increase or decrease (typically increase) the reluctance (resistance to magnetic motive force) of a magnetic path in a direct and rapid manner and subsequently restore it to its original (typically lower) value in a direct and rapid manner. A reluctance switch typically has analog characteristics. By way of contrast, an off/on electric switch typically has a digital characteristic, as there is no electricity "bleed-through." With the current state of the art, reluctance switches have magnetic flux bleed-through. Reluctance switches may be implemented mechanically, such as to cause keeper movement to create an air gap, or electrically by several means, or by other means. One electrical means is that of using control coils wound around the flux paths.

Another electrical means is the placement within the flux path of certain classes of materials that change (typically increase) their reluctance upon the application of electricity. Another electrical means is to saturate a region of the switch material so that the reluctance increases to that of air by inserting conducting electrical wires into the material as described by Konrad and Brudny in "An Improved Method for Virtual Air Gap Length Computation," in IEEE Transactions on Magnetics, Vol. 41, No. 10, October 2005.

The patent literature describes a number of constructs that have been devised to vary the amounts of magnetic flux in alternate flux paths by disproportionately dividing the flux from a stationary permanent magnet or magnets between or among alternate flux paths repeatedly for the purpose of generating electricity. The increase of flux in one magnetic path and the corresponding decrease in the other path(s) provide the basis for inducing electricity when coils are wound around the paths. The physics involved for producing electricity by these constructs is described by the transformer equation $V = -\int dB/dt.ds$. A variety of reluctance switching means have been employed to cause the flux to be increased/decreased through a particular alternate path with a corresponding decrease/increase in the other path and to do so repeatedly.

A means of switching flux along alternate paths between the opposite poles of a permanent magnet have included the flux transfer principle described by R. J. Radus, Engineers' Digest, July, 1963.

A result of providing alternate flux paths of generally similar geometry and permeability is that, under particular conditions, the alternate path first selected or the path selected for the majority of the flux will remain a "preferred path" in that it will retain more flux and the other path, despite the paths having equal reluctance. (There is not an automatic equalization of the flux among similar paths.)

Moskowitz, "Permanent Magnet Design and Application Handbook" 1995, page 87 discusses this effect with regard to the industrial use of permanent magnets to lift and release iron and steel by turning the permanent magnet on and (almost) off via reluctance switching that consists of the electric pulsing of coils wound around the magnetic flux paths (the reluctance switches).

Experimental results with four iron rectangular bars (relative permeability=1000) placed together in a square with a bar permanent magnet (flux density measured at one pole=5000 Gauss) between two of the opposing bars roughly in a centre position showed that removal and replacement of the one of the end bars that is parallel to the bar magnet will result in about 80% of the flux remaining in the bar that remained in contact. The results further showed that the preferred path must experience an increase of reluctance about IOx of that of the available alternate path before its disproportionate flux condition will yield and transfer to the alternate path.

Flynn U.S. Pat. No. 6,246,561; Patrick, et al. U.S. Pat. No. 6,362,718; and Pedersen U.S. Pat. No. 6,946,938 all disclose a method and apparatus for switching (dividing) the quantity of magnetic flux from a stationary permanent magnet or magnets between and among alternate paths for the purpose of generating electricity (and/or motive force). They provide for the increase of magnetic flux in one path with a corresponding decrease in the other path(s). There are always at least two paths.

SUMMARY OF THE INVENTION

The present invention relates to methods and apparatus for the production of electricity through the operation of a circuit based upon a single magnetic flux path. A magnetisable member provides the flux path. One or more electrically conductive coils are wound around the member, and a reluctance or flux switching apparatus is used to control the flux. When operated, the switching apparatus causes a reversal of the polarity (direction) of the magnetic flux of the permanent magnet through the member, thereby inducing alternating electrical current in each coil.

According to the invention, the flux switching apparatus may be motionless or rotational. In the motionless embodiments, four reluctance switches are operated by a control unit that causes a first pair of switches to open (increasing reluctance), while another pair of switches close (decreasing reluctance). The initial pair is then closed as the other pair is opened, and so on. This 2x2 opening and closing cycle repeats and, as it does, the magnetic flux from the stationary permanent magnet(s) is reversed in polarity through the magnetisable member, causing electricity to be generated in the conducting coils. An alternative motionless embodiment uses two reluctance switches and two gaps of air or other materials.

In alternative embodiments, the flux switching apparatus comprises a body composed of high-permeability and low-permeability materials, such that when the body is rotated, the flux from the magnet is sequentially reversed through the magnetisable member. In the preferred embodiment the body is cylindrical having a central axis, and the body rotates about the axis. The cylinder is composed of a high-permeability material except for section of low-permeability material that divided the cylinder into two half cylinders. At least one electrically conductive coil is wound around the magnetisable member, such that when the body rotates an electrical current is induced in the coil. The body may be rotated by mechanical, electromechanical or other forces.

A method of generating electrical current, comprises the steps of providing a magnetisable member with an electrically conductive coil wound therearound, and sequentially reversing the flux from a permanent magnet through the member, thereby inducing electrical current in the coil.

BRIEF DESCRIPTION OF THE DRAWINGS

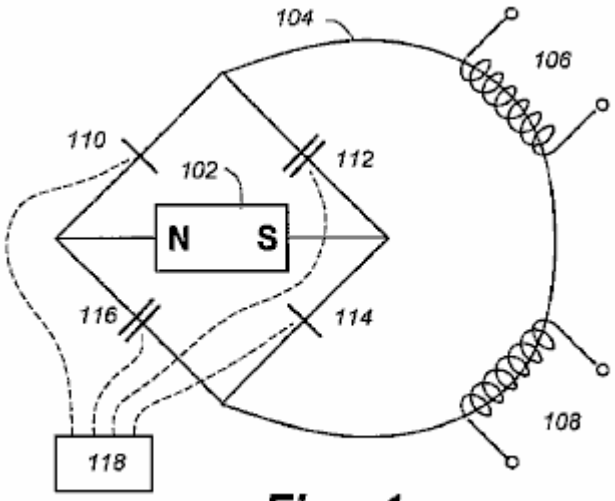

Fig - 1

Fig.1 is a schematic diagram of a magnetic circuit according to the invention.

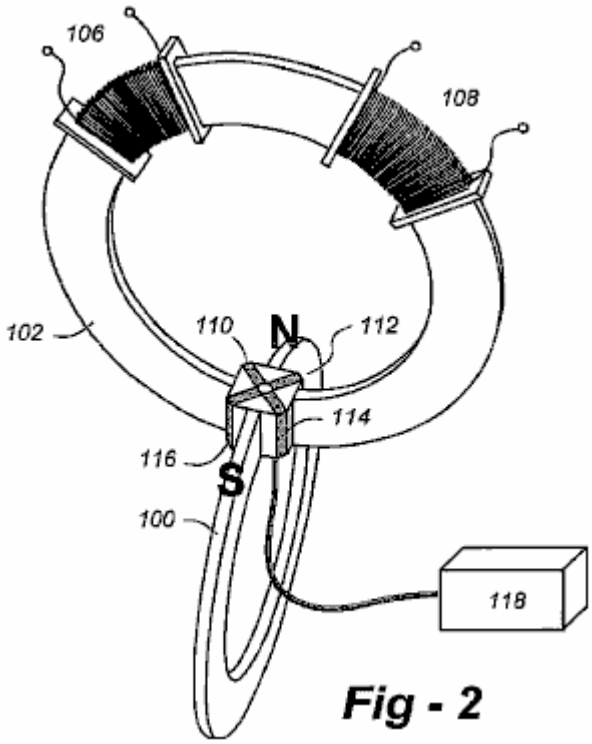

Fig - 2

Fig.2 is a perspective view of an embodiment of the invention based upon motionless magnetic flux switches.

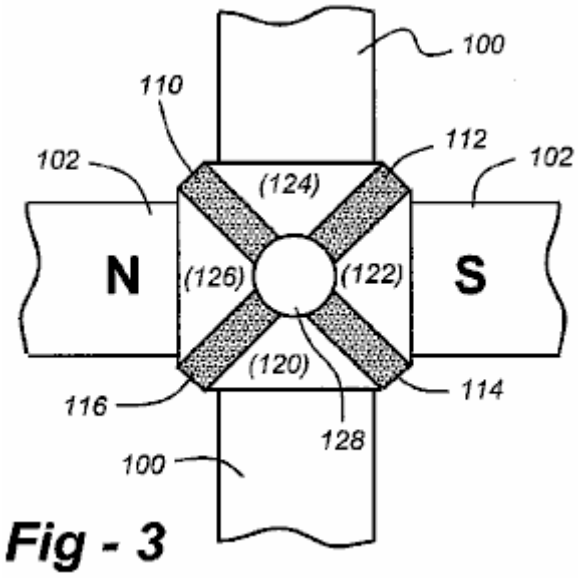

Fig.3 is a detail drawing of a motionless flux switch according to the invention.

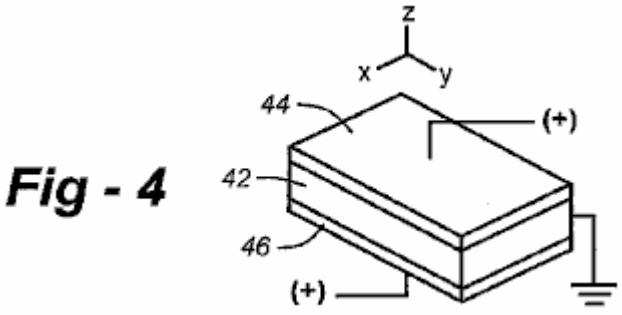

Fig.4 is a detail drawing of a reluctance switch according to the invention.

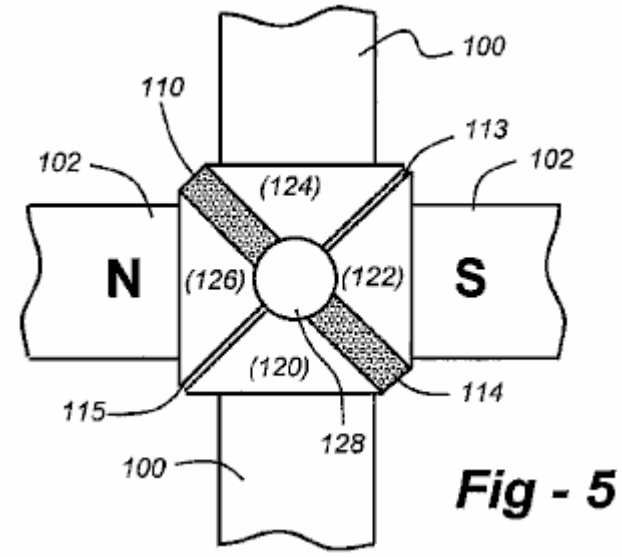

Fig.5 is a detail drawing of an alternative motionless flux switch according to the invention which utilizes gaps of air or other materials.

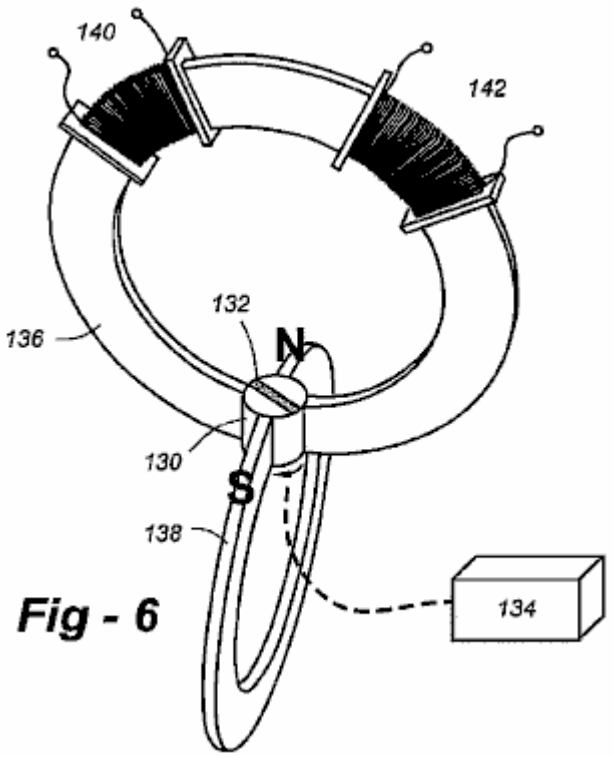

Fig - 6

Fig.6 is a schematic diagram of a system using a rotary flux switch according to the invention.

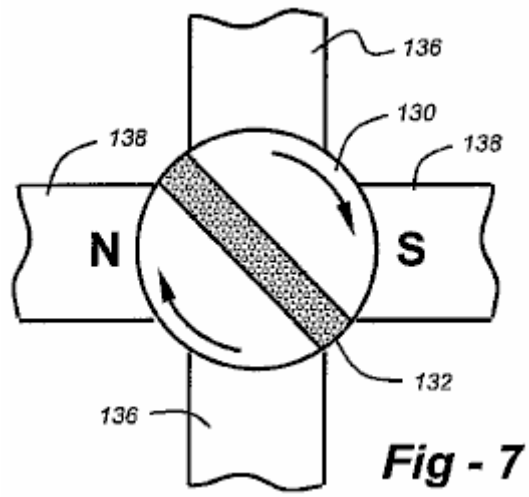

Fig - 7

Fig.7 is a detail drawing of a rotary flux switch according to the invention.

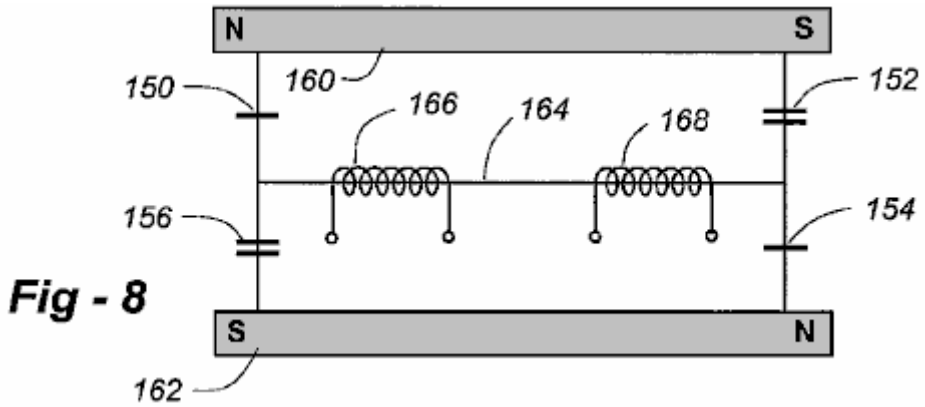

Fig - 8

Fig.8 is a schematic diagram of a circuit according to the invention utilizing two permanent magnets and a single flux path.

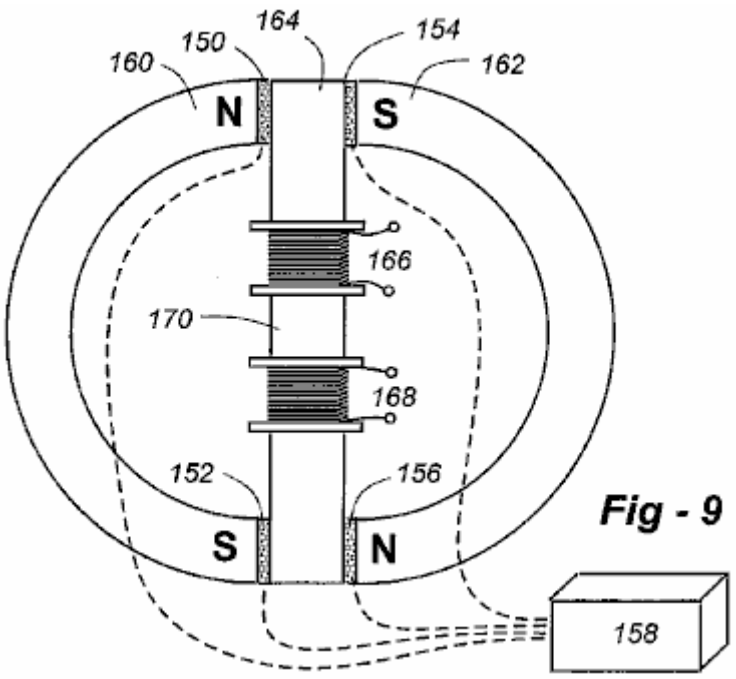

Fig - 9

Fig.9 shows one possible physical embodiment of the apparatus with the components of FIG. 8, including a reluctance switch control unit.

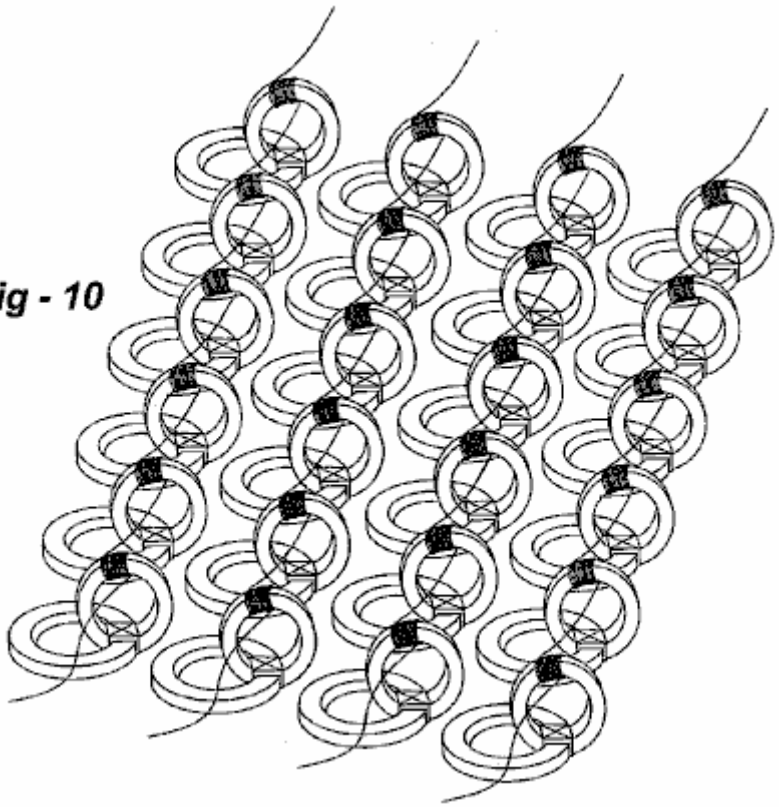

Fig - 10

Fig.10 shows and array of interconnected electrical generators according to the invention.

DETAILED DESCRIPTION OF THE PREFERRED EMBODIMENTS

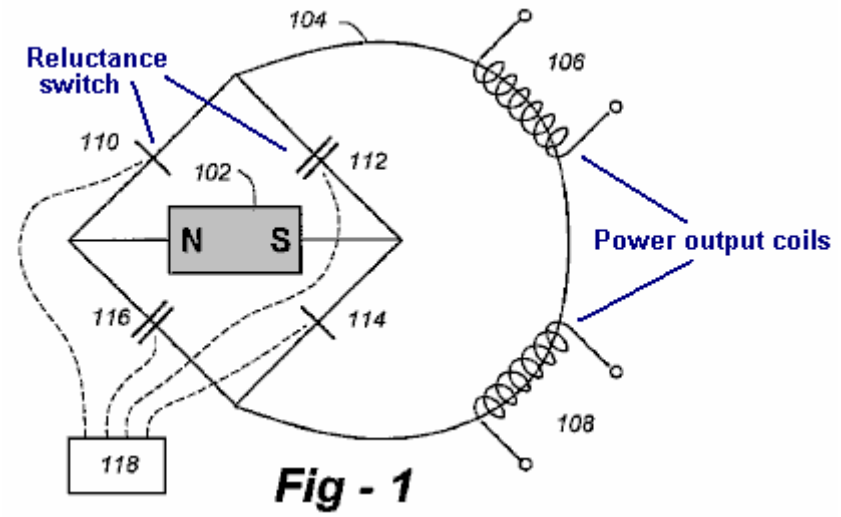

Fig.1 is a schematic diagram of a magnetic circuit according to the invention utilizing a motionless flux switch. The circuit includes the following components: a permanent magnet 102, single flux path 104, conducting coils 106, 108, and four reluctance switches 110, 112, 114, 116. Under the control of unit 118, reluctance switches 110, 114 open (increasing reluctance), while switches 112, 116 close (decreasing reluctance). Reluctance switches 110, 114 then close, while switches 112, 116 open, and so on. This 2x2 opening and closing cycle repeats and, as it does, the magnetic flux from stationary permanent magnet 102 is reversed in polarity through single flux path 104, causing electricity to be generated in conducting coils 106, 108.

An efficient shape of permanent magnet 102 is a "C" in which the poles are in close proximity to one another and engage with the flux switch. The single flux is carried by a magnetisable member 100, also in a "C" shape with ends that are in close proximity to one another and also engage with the flux switch. In this, and in other embodiments, the 2x2 switching cycle is carried out simultaneously. As such, control circuit 118 is preferably implemented with a crystal-controlled clock feeding digital counters, flip-flops, gate packages, or the like, to adjust rise time, fall time, ringing and other parasitic effects. The output stage of the control circuit may use FET (Field-Effect Transistor switches) to route analog or digital waveforms to the reluctance switches as required.

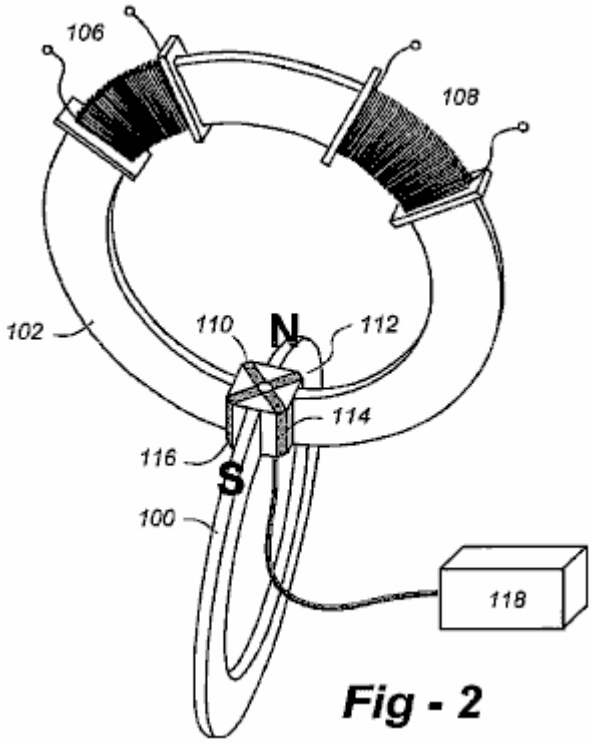

Fig.2 is a perspective of one possible physical embodiment of the apparatus using the components of Fig.1, showing their relative positions to one another. Reluctance switches 110, 112, 114, 116 may be implemented differently, as described below, but will usually occupy the same relative position within the apparatus.

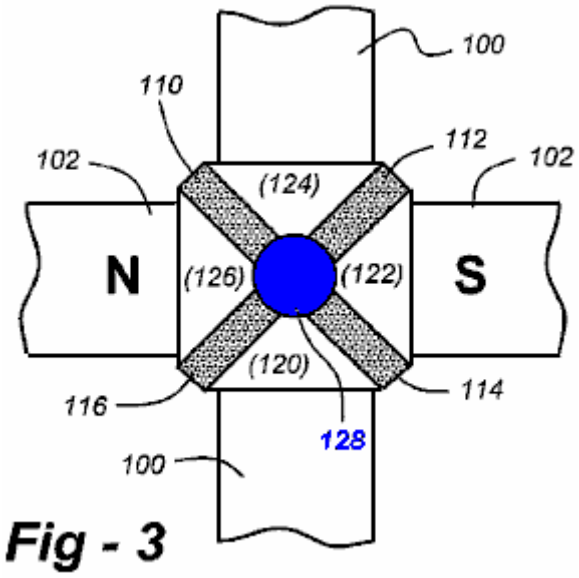

Fig - 3

Fig.3 is a detail drawing of the motionless flux switch. Connecting segments 120, 122, 124, 126 must be made of a high-permeability ferromagnetic material. The central volume 128 may be a through-hole, providing an air gap, or it may be filled with glass, ceramic or other low-permeability material. A super-conductor or other structure exhibiting the Meissner effect may alternatively be used.

In the embodiment depicted in Fig.2 and Fig.3, reluctance switches 110, 112, 114, 116 are implemented with a solid-state structure facilitating motionless operation. The currently preferred motionless reluctance switch is described by Toshiyuki Ueno & Toshiro Higuchi, in the paper "Investigation on Dynamic Properties of Magnetic Flux Control Device composed of Lamination of Magnetostrictive Material Piezoelectric Material," The University of Tokyo 2004, the entirety of which is incorporated herein by reference. As shown in Fig.4, this switch is made of a laminate of a GMM (Giant Magnetostrictive Material 42), a TbDyFe alloy, bonded on both sides by a PZT (Piezoelectric) material 44, 46 to which electricity is applied. The application of electricity to the PZT creates strain on the GMM, which causes its reluctance to increase.

Fig - 4

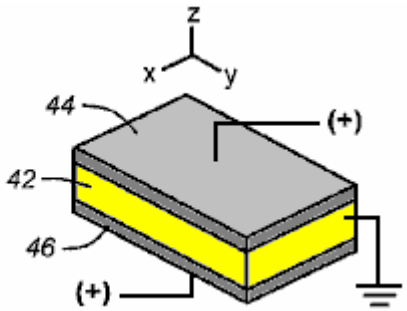

Other arrangements are applicable, including those disclosed in pending U.S. Patent Application Serial no. 2006/0012453, the entire content of which is incorporated herein by reference. These switches disclosed in this reference are based upon the magnetoelectric (ME) effects of liquid crystal materials in the form of magnetorestrictive and piezoelectric effects. The properties of ME materials are described, for example, in Ryu et al, "Magnetoelectric Effect in Composites of Magnetorestrictive and Piezoelectric Materials," Journal of Electroceramics, Vol. 8, 107-119

Filipov et al, "Magnetoelectric Effects at Piezoresonance in Ferromagnetic-Ferroelectric Layered Composites," Abstract, American Physical Society Meeting (March 2003) and Chang et al., "Magneto-band of Stacked Nanographite Ribbons," Abstract, American Physical Society Meeting (March 2003). The entire content of each of these papers are also incorporated herein.

Further alternatives include materials that may sequentially heated and allowed to cool (or cooled and allowed to warm up or actively heated and cooled) above and below the Currie temperature, thereby modulating reluctance. Gadolinium is a candidate since its Currie point is near room temperature. High-temperature superconductors are other candidates, with the material being cooled in an insulated chamber at a temperature substantially at or near the Currie point. Microwave or other energy sources may be used in conjunction with the control unit to effectuate this switching. Depending upon how rigidly the switches are contained, further expansion-limiting `yokes' may or may not be necessary around the block best seen in Fig.4.

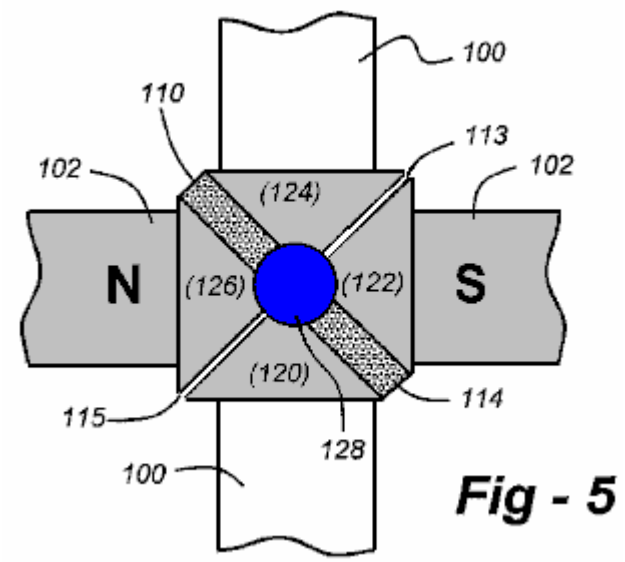

Fig - 5

Fig.5 is a detail drawing of an alternative motionless flux switch according to the invention which utilizes gaps of air or other materials. This embodiment uses two electrically operated reluctance switches 110, 114, and two gaps 113, 115, such that when the switches are activated in a prescribed manner, the flux from the magnet 102 is blocked along the switch segments containing the switches and forced through the gap-containing segments, thereby reversing the flux through the magnetisable member 100. Upon activation of the two reluctance switches 110, 114, the flux, seeking a path of significantly lower reluctance, flips back to the original path containing the (non deactivated) reluctance switches, thereby reversing the flux through the member 100. Note that the flux switches may also be electromagnetic to saturate local regions of the switch such that reluctance increases to that of air (or gap material), creating a virtual gap as described by Konrad and Brudny in the Background of the Invention.

More particularly, flux switching apparatus according to this embodiment uses a permanent magnet having a north pole `N' and a south pole `S' in opposing relation across a gap defining a volume. A magnetisable member with ends `A' and 'B' is supported in opposing relation across a gap sharing the volume, and a flux switch comprises a stationary block in the volume having four sides, 1-4, with two opposing sides interfaced to N and S, respectively and with the other two opposing sides being interfaced to A and B, respectively. The block is composed of a magnetisable material segmented by two electrically operated magnetic flux switches and two gaps filled with air or other material(s). A control unit in electrical communication with the flux switches is operative to:

a) passively allow a default flux path through sides 1-2 and 3-4, then
b) actively establish a flux path through sides 2-3 and 1-4, and
c) repeat a) and b) on a sequential basis.

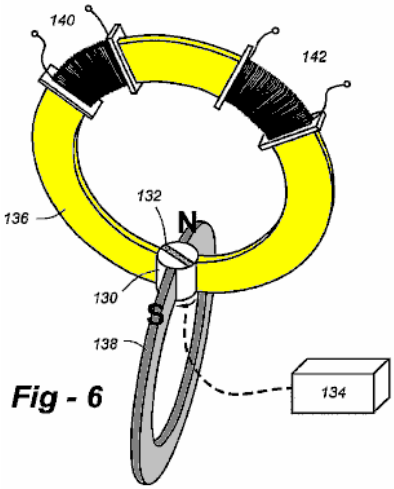

Fig - 6

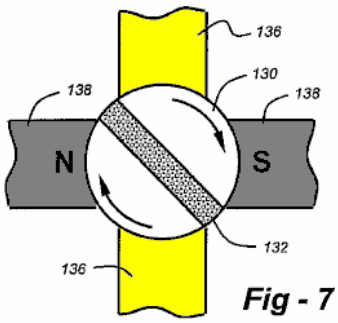

Fig - 7

As an alternative to a motionless flux switch, a rotary flux switch may be used to implement the 2x2 alternating sequence. Referring to Fig.6 and Fig.7, cylinder 130 with flux gap 132 is rotated by a motive means 134. This causes the halves of cylinder 130 to provide two concurrent and separate magnetic flux bridges (i.e., a "closed" reluctance switch condition), in which a given end of magnetisable member 136 is paired up with one of the poles

of stationary permanent magnet 138. Simultaneously, the other end of single flux path carrier 136 is paired up with the opposite pole of stationary permanent magnet 138.

Fig.7 is a detail view of the cylinder. Each 90° rotation of the cylinder causes the first flux bridges to be broken (an "open" reluctance switches condition) and a second set of flux bridges to be created in which the given end of member 136 is then bridged with the opposite pole of stationary permanent magnet 138. A full rotation of cylinder 130 causes four such reversals. Each flux reversal within single flux path 2 causes an electric current to be induced in conducting coil(s) 140, 142. In this embodiment, it is important to keep a precise, consistent spacing between each of the "halves" of (rotating) cylinder 130 in relation to the poles of permanent magnet 138 and the ends of flux path carrier 136 as the magnetic flux bridges are provided by the cylinder 130 as it rotates.

Rotating cylinder 130 is made of high magnetic permeability material which is divided completely by the flux gap 132. A preferred material is a nanocrystalline material such as FINEMET® made by Hitachi. The flux gap 132 may be air, glass, ceramic, or any material exhibiting low magnetic permeability. A superconductor or other structure exhibiting the Meissner effect may alternatively be used.

An efficient shape of magnetisable member 136 is a "C" in which its opposing ends are curved with a same radius as cylinder 130 and are in the closest possible proximity with rotating cylinder 130. Permanent magnet 138 is also preferably C-shaped in which the opposing poles are curved with a same radius as cylinder 130 and are in the closest possible proximity with rotating cylinder 130. Manufacturing and assembly considerations may dictate other shapes.

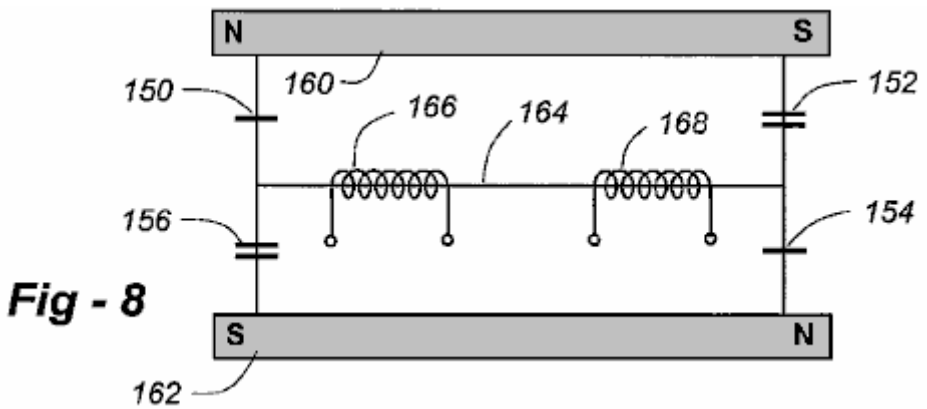

Fig - 8

While the embodiments described thus far utilize a single permanent magnet, other embodiments are possible according to the invention utilizing a plurality of permanent magnets while nonetheless generating a single flux path. Fig.8 depicts a circuit utilizing two permanent magnets and a single flux path. Fig.9 shows one possible physical embodiment of the apparatus based upon the components of Fig.8, including a reluctance switch control unit 158.

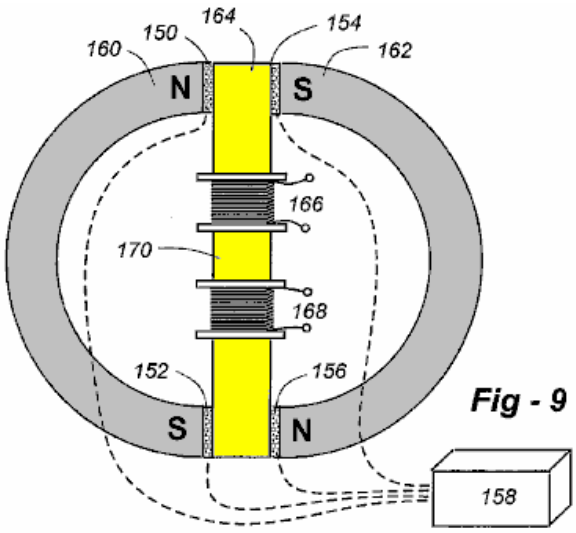

Fig - 9

Under the control of unit 158, reluctance switches 150, 152 open (increasing reluctance), while switches 154, 156 close (decreasing reluctance). Reluctance switches 150, 152 then close, while switches 154, 156 open, and so on. This 2x2 opening and closing cycle repeats and, as it does, the magnetic flux from stationary permanent magnets 160, 162 is reversed in polarity through the magnetisable member, causing electricity to be generated in conducting coils 166, 168.

In the preferred implementation of this embodiment, the magnets are arranged with their N and S poles reversed. The magnetisable member is disposed between the two magnets, and there are four flux switches, SW1-SW4, two between each end of the member and the poles of each magnet. The reluctance switches are implemented with the structures described above with reference to Figs. 1 to 3.

For added particularity, assume the first magnet has north and south poles, N1 and S1, the second magnet has north and south poles, N2 and S2 and the member has two ends A and B. Assuming SW1 is situated between N1 and A, SW2 is between A and S2, SW3 is between N2 and B, and SW4 is between B and S1, the control circuitry operative to activate SW1 and SW4, then activate SW2 and SW3, and repeat this process on a sequential basis. As with the other embodiments described herein, for reasons of efficiency, the switching is carried out simultaneously.

In all of the embodiments described herein the material used for the permanent magnet(s) may be either a magnetic assembly or a single magnetized unit. Preferred materials are ceramic ferrite magnets (Fe_20_3), samarium cobalt ($SmCO_5$), or combinations of iron, neodymium, and boron. The single flux path is carried by a material having a high magnetic permeability and constructed to minimize eddy currents. Such material may be a laminated iron or steel assembly or ferrite core such as used in transformers. A preferred material is a nanocrystalline material such as FINEMET®. The conducting coil or coils are wound around the material carrying the single flux path as many turns as required to meet the voltage, current or power objectives. Ordinary, standard, insulated, copper magnet wire (motor wire) is sufficient and acceptable. Superconducting materials may also be used. At least some of the electricity induced in the conducting coils may be fed back into the switch control unit. In this mode of operation, starting pulses of electricity may be provided from a chemical or solar battery, as required.

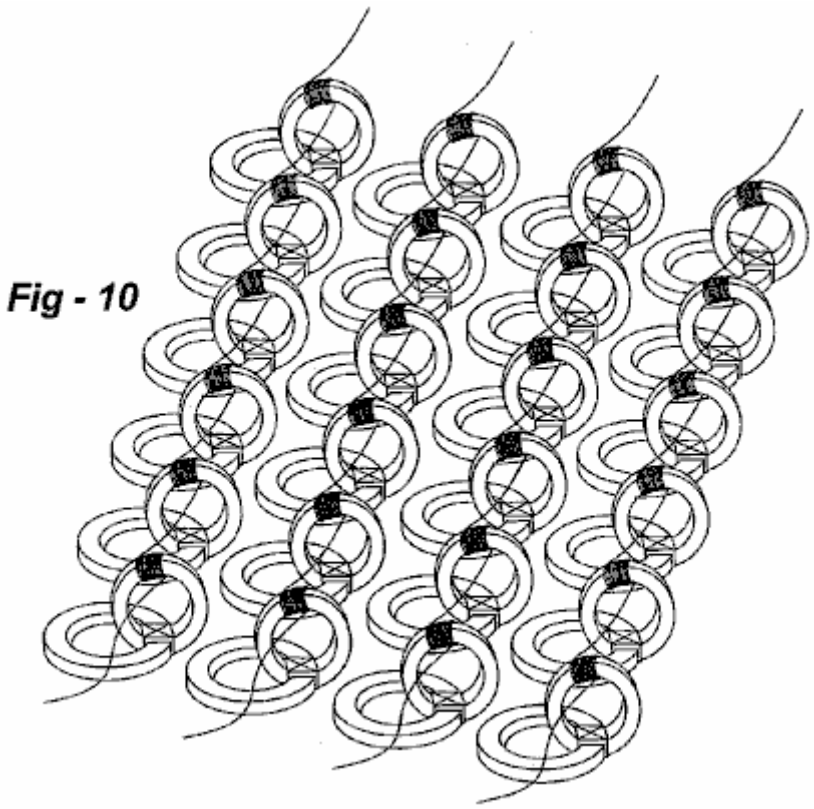

Fig - 10

Although in the embodiments of Fig.2 and Fig.6 the magnet and flux-carrying materials are flat elements lying in orthogonal planes with flux-carrying material lying outside the volume described by the magnet, the flux path may be disposed `within' the magnet volume or configured at an angle. The physical scale of the elements may also be varied to take advantage of manufacturing techniques or other advantages. Fig.10, for example, shows an array of magnetic circuits, each having one or more coils that may be in series, parallel, or series-parallel combinations, depending upon voltage or current requirements. In each case the magnets may be placed or fabricated using techniques common to the microelectronics industry. If mechanical flux switches are used they may be fabricated using MEMs-type techniques. If motionless switches are used, the materials may be placed and/or deposited. The paths are preferably wound in advance then picked and placed into position as shown. The embodiment shown in Fig.9 is also amenable to miniaturization and replication.

CLAIMS

1. An energy generator, comprising: at least one permanent magnet generating flux; a magnetisable member; an electrical conductor wound around the member; and a plurality of magnetic flux switches operative to sequentially reverse the flux from the magnet through the member, thereby inducing electricity in the electrical conductor.

2. The energy generator of claim 1, comprising: first and second loops of magnetisable material; the first loop having four segments in order A, 1, B, 2; the second loop having four segments in order C, 3, D, 4; the magnetisable member coupling segments 2 and 4; the permanent magnet coupling segments 1 and 3, such that the flux from the magnet flows through segments A, B, C, D and the magnetisable member; four magnetic flux switches, each controlling the flux through a respective one of the segments A, B, C, D; and a controller operative to activate switches A-D and B-C in an alternating sequence, thereby reversing the flux through the segment and inducing electricity in the electrical conductor.

3. The energy generator of claim 2, wherein the loops and magnetisable member are composed of a nanocrystalline material exhibiting a substantially square BH intrinsic curve.

4. The energy generator of claim 2, wherein each magnetic flux switch is operative to add flux to the segment it controls, thereby magnetically saturating that segment when activated.

5. The energy generator of claim 2, wherein: each segment has an aperture formed therethrough; and each magnetic flux switch is implemented as a coil of wire wound through one of the apertures.

6. The energy generator of claim 2, wherein the controller is at least initially operative to activate the switches with electrical current spikes.

7. The energy generator of claim 2, wherein the first and second loops are toroids.

8. The energy generator of claim 2, wherein the first and second loops are spaced apart from one another, with A opposing C, 1 opposing 3, B opposing D and 2 opposing 4.

9. The energy generator of claim 2, wherein the first and second loops intersect to form the magnetisable member.

10. The energy generator of claim 2, wherein the flux flowing through each segment A, B, C, D is substantially half of that flowing through the magnetisable member prior to switch activation.

The Energy Conversion Device of William McDavid junior

US Patent 6,800,955 5th Oct. 2004 Inventor: William McDavid jnr.

Fluid-powered energy conversion device

Note: The wording of this patent has been altered to make it easier to understand. An unaltered copy can be downloaded from www.freepatentsonline.com. In this patent, William relates sections of his design according to the direction of flow through the housing and so he calls the first section the "downstream" chamber and the following chamber as the "upstream" chamber. Although water could be used, this patent essentially describes a high-efficiency wind-powered generator. For dimensions: one inch = 25.4 mm.

Abstract:

A fluid-powered energy conversion device which converts energy in a moving fluid into mechanical energy. A rigid cylindrical frame of toroidal baffles forms an "upstream" annular or ring-shaped chamber and a "downstream" annular chamber, each of the chambers having open sides to allow the entry of the fluid. The toroidal baffles create an upstream **drive** vortex in an upstream central vortex chamber, and a downstream **extraction** vortex rotating in the opposite direction in a downstream central vortex chamber. A set of hinged louvers surround the vortex chambers and these allow the fluid to enter each chamber only in the direction of vortex rotation, and prevent the fluid from exiting through the sides of the device. The driving vortex passes through, and rotates, a turbine positioned in a central aperture between the two chambers. The turbine blades are rotated by the rotational momentum of the driving fluid vortex, plus the lift generated by each turbine blade, plus the additional momentum imparted by the vortex reversal.

US Patent References:

McDavid, Jr. – US 6,710,469
McDavid, Jr. – US 6,518,680
Walters – US 5,664,418

Description:

BACKGROUND OF THE INVENTION

1. Technical Field of the Invention

The present invention relates generally to electrical generation and energy conversion devices, and more particularly to a fluid-powered energy conversion device which converts the energy of wind or flowing water into mechanical or electrical energy.

2. Description of Related Art

The use of wind or flowing water to provide power for various uses dates back many centuries. In modern times, wind and water have been used to generate electricity. Hydroelectric generating plants have been used to generate large quantities of electrical energy for widespread distribution. However, this requires major permanent environmental changes to the areas where dams are built and reservoirs rise. Wind-powered devices, in general, have been used to perform mechanical work, or to generate electricity, only on a limited scale. With the ever increasing demand for additional, or alternative energy sources, all possible sources are being given more scrutiny. This is particularly true for sources which are non-polluting and inexhaustible. Free-flowing hydro-electric and wind-powered systems provide such sources, and the capturing of increased energy from wind and water has received much consideration.

However, commercial hydro-electric and wind-powered electrical generation devices which are currently in use have several disadvantages. Wind-powered devices, in particular, are expensive, inefficient, dangerous, noisy, and unpleasant to be around. To capture a large volume of wind, existing wind-powered devices are very large. As a result, they cannot be distributed throughout population centres, but must be installed some distance away. Then, like dams with hydro-electric generators, the electrical energy they generate must be transmitted, at considerable cost and with considerable energy loss, to the population centres where the energy is needed.

It would be desirable to distribute smaller water-powered and wind-powered units throughout the population centres. For example, it would be desirable to have a wind-powered unit for each building structure, thus distributing the generating capacity over the entire area, and making the energy supply less vulnerable to local

events such as storms or earthquakes. Such distributed generation would also solve the most common and valid objection to wind power, namely, that the wind does not blow all the time. In a large geographical area, however, wind is almost always blowing somewhere. Therefore, with wind-powered generators which are distributed throughout the area, power could be generated in the areas where the wind is blowing, and then transmitted to the rest of the power grid. However, with existing technology, smaller units suitable for distributing throughout a population area are not efficient enough to provide a sufficient amount of energy to power a structure such as a house or office building. In addition, such units are visually obtrusive and noisy, making them unsuitable for use in residential or other highly populated settings.

Existing wind-powered electrical generation devices commonly utilise a propeller mounted on the horizontal shaft of a generator which, in turn, is mounted at the top of a tower. This is an inefficient design because energy is extracted from the wind by reducing the wind velocity as it passes through the propeller. This creates a pocket of slow-moving air cantered behind the propeller, which the ambient wind blows around. Therefore, only the outer portion of the propeller blades use the wind efficiently.

To counter this effect, modern windmill designs utilise extremely long propeller blades. The use of such massive blades, however, has its own disadvantages. Firstly, the propellers are known to kill or injure thousands of large birds each year. Secondly, the massive blades can be dangerous if the device fails structurally and the propeller breaks loose. In this case, the propeller can fly a considerable distance and cause serious damage or injury to anything or anyone in its path. Thirdly, the propeller design contains an inherent gravitational imbalance. The rising blades on one side of the propeller's hub are opposing gravity, while the descending blades on the other side of the hub are falling with gravity. This imbalance creates a great deal of vibration and stress on the device. Consequently, the device must be structurally enhanced, at great expense, to withstand the vibration and stress, and thus avoid frequent maintenance and/or replacement.

It would therefore be advantageous to have a fluid-powered energy conversion device which overcomes the shortcomings of existing devices. Such a device could utilise wind energy or the energy of flowing water to provide mechanical energy or electrical energy. The present invention provides such a device.

SUMMARY OF THE INVENTION

One aspect, the present invention is a fluid-powered energy-conversion device for converting energy in a moving fluid into mechanical energy. The device includes a rigid cylindrical frame which has an “upstream” annular (ring-shaped) chamber and a “downstream” annular chamber. Each of the chambers has sides which are open to allow entry of the moving fluid. A first set of baffles are mounted longitudinally in the upstream chamber, and these create a driving vortex which rotates in a first direction when the moving fluid enters the upstream chamber through the upstream chamber's open sides. A set of hinged louvers are positioned in the openings between these baffles, creating a central vortex chamber centered on the longitudinal axis of the device.

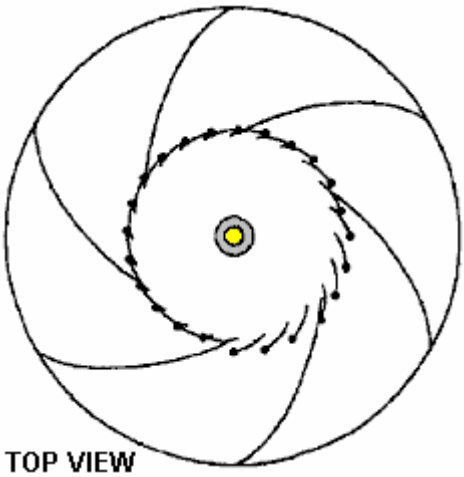

This first set of louvers permits entry of the moving fluid into the upstream central vortex chamber only when the fluid is rotating in the first direction. They also prevent the fluid from exiting from the upstream central vortex chamber through the sides of the device. The device also includes a floor of the upstream annular chamber which slopes upwards towards the downstream chamber as the floor approaches the central longitudinal axis of the device.

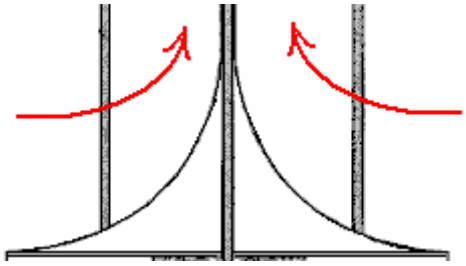

This sloping floor causes the drive vortex to flow “downstream” (upwards for air) through the upstream central vortex chamber and pass through a central aperture located between the upstream annular chamber and the downstream annular chamber. A longitudinal drive shaft is mounted centrally in the central aperture, and a turbine is mounted on the drive shaft in the central aperture. The turbine is rotated by the drive vortex as the drive vortex passes through the central aperture.

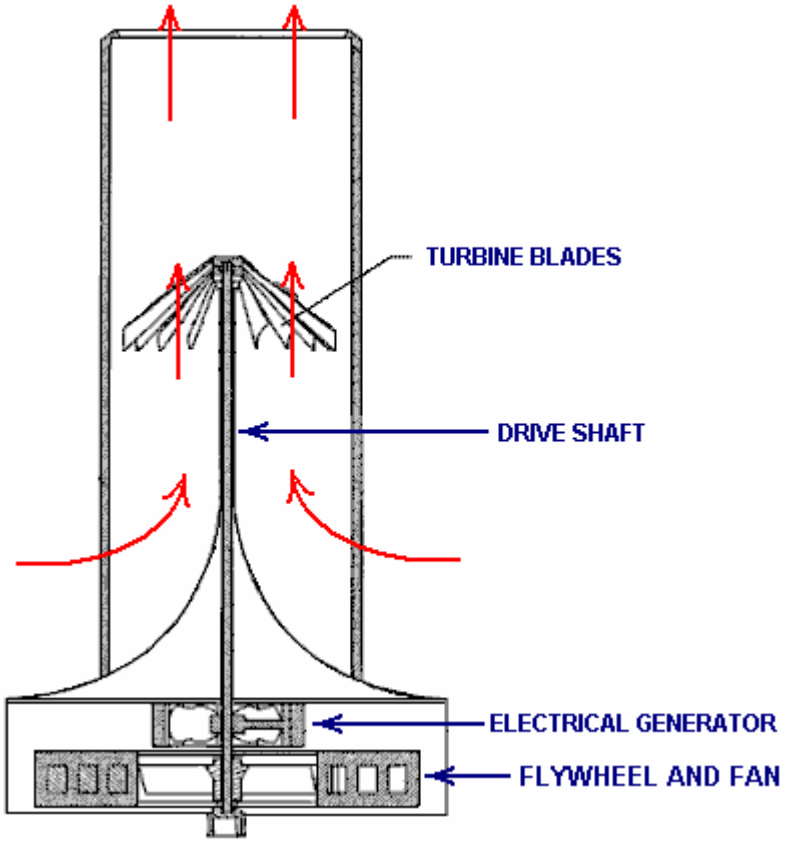

The device may also include a second set of baffles longitudinally mounted in the “downstream” (upper for air) chamber which operate to create an extraction vortex which rotates in the opposite direction when the moving fluid enters the downstream chamber through the downstream chamber's open sides. Additionally, a second set of hinged louvers may be positioned in the openings between the second set of baffles, encircling a downstream central vortex chamber. The second set of louvers permit entry of the moving fluid into the downstream central vortex chamber only when the fluid is rotating in the direction opposite to the direction of flow in the “upstream” camber. These louvers also prevent the fluid from exiting the downstream central vortex chamber through the sides of the device. In this manner, the turbine is rotated by the drive vortex as the drive vortex passes through the turbine and reverses direction to match the direction of the extraction vortex.

For high-wind conditions or when powered by water flow, the driving vortex and extraction vortex may rotate in the same direction. The first set of hinged louvers form the upstream central vortex chamber, and the second set of hinged louvers form the downstream central vortex chamber. The first set of louvers permit entry of the wind or water into the upstream central vortex chamber only when the fluid is rotating in the first direction.

BRIEF DESCRIPTION OF THE DRAWINGS

The invention will be better understood and its numerous objects and advantages will become more apparent to those skilled in the art by reference to the following drawings, in conjunction with the accompanying specification, in which:

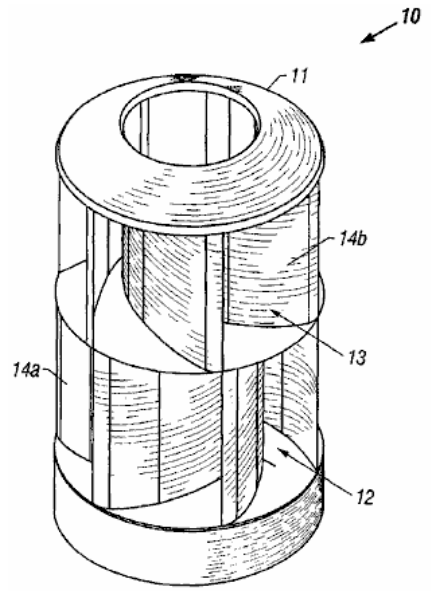

FIG. 1

FIG.1 is a perspective view of a first embodiment of the present invention that converts wind energy to mechanical or electrical energy;

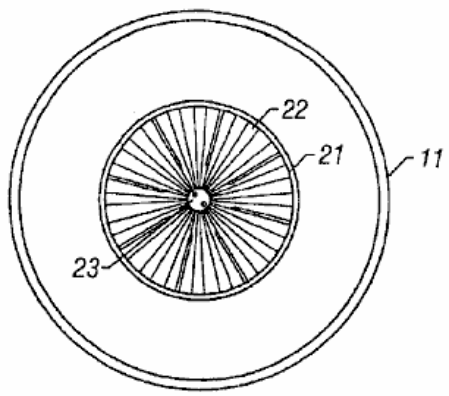

FIG. 2

FIG.2 is a top plan view of the embodiment of Fig.1

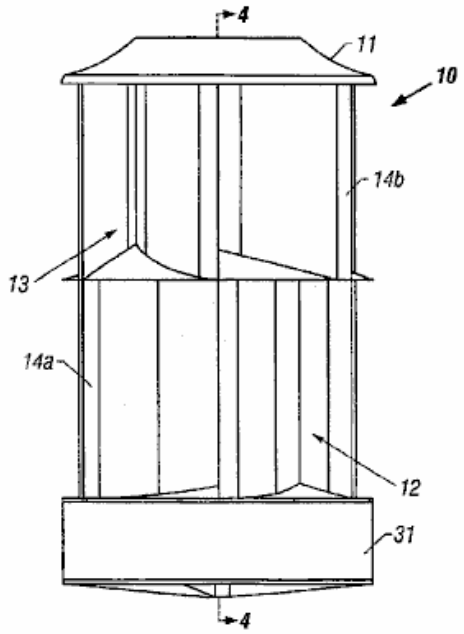

FIG. 3

FIG.3 is a side elevational view of the embodiment of Fig.1

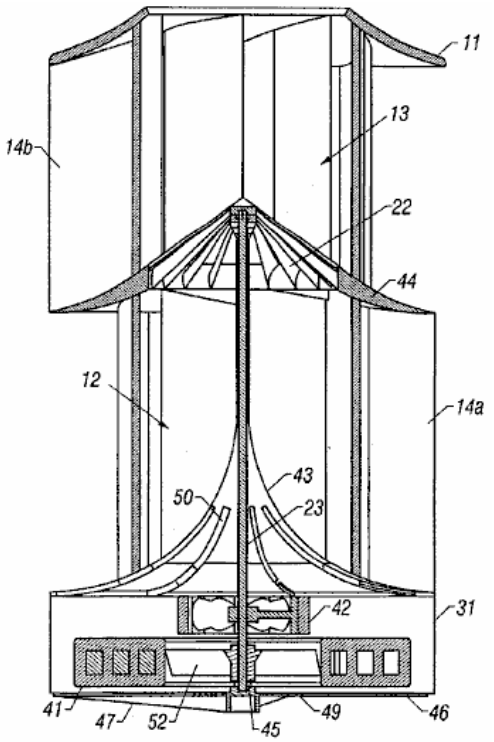

FIG. 4

FIG.4 is a cross-sectional view of the embodiment of Fig.1 taken along line **4** — **4** of Fig.3 with an electrical generator installed to produce electrical energy;

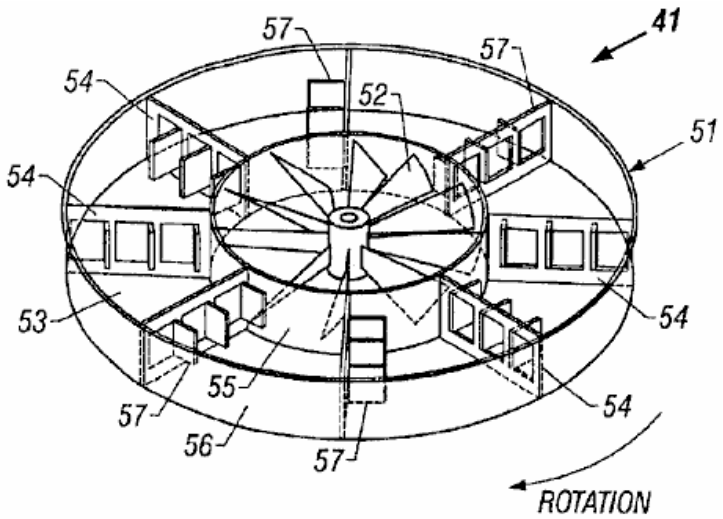

FIG. 5

FIG.5 is a perspective view of a fluid-filled flywheel suitable for use with the present invention;

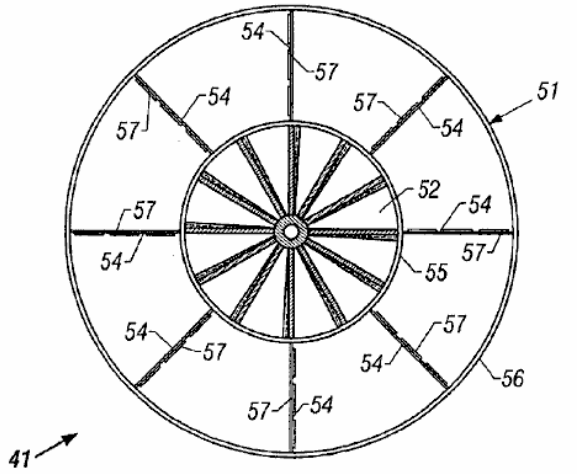

FIG. 6

FIG.6 is a top plan view of the fluid-filled flywheel of Fig.5

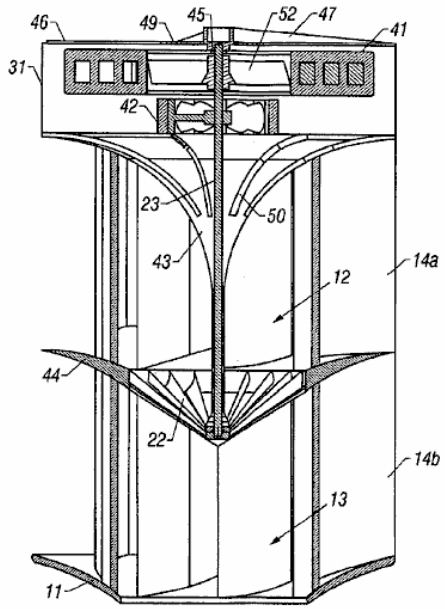

FIG. 7

FIG.7 is a cross-sectional view of an embodiment of the present invention that converts the energy of flowing **water** to electrical energy;

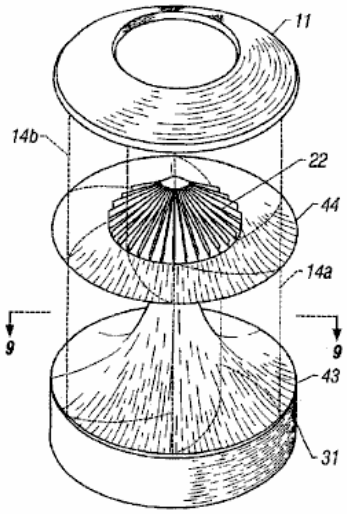

FIG. 8

FIG.8 is a perspective view of the embodiment of Fig.1 with the longitudinal baffles drawn in phantom so that the annular central divider (mid-deck) and turbine can be seen

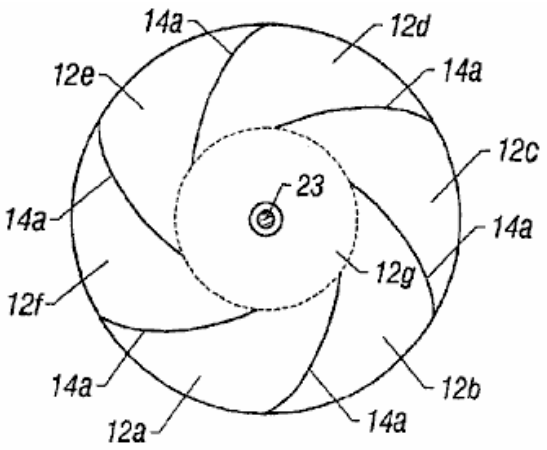

FIG. 9

FIG.9 is a horizontal cross-sectional view of the embodiment of Fig.1 taken along line **9** — **9** of Fig.8

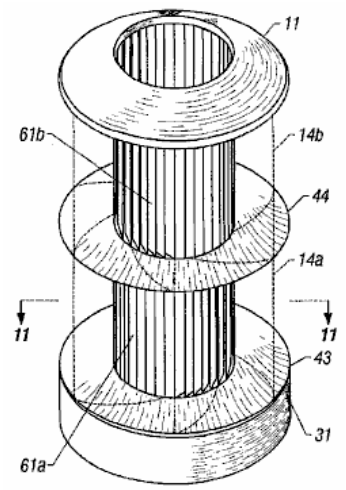

FIG. 10

FIG.10 is a perspective view of a second embodiment of the present invention that converts wind energy to mechanical or electrical energy, with the longitudinal baffles drawn in phantom so that a set of hinged longitudinal louvers can be seen; and

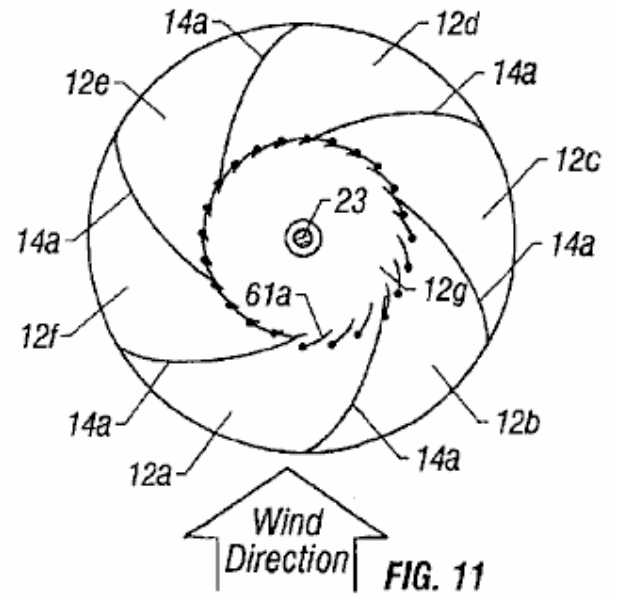

FIG. 11

FIG.11 is a horizontal cross-sectional view of the embodiment of Fig.10 taken along line **11** — **11** .

In the drawings, like or similar elements are designated with identical reference numerals throughout the various views, and the various elements shown are not necessarily drawn to scale.

DETAILED DESCRIPTION OF EMBODIMENTS

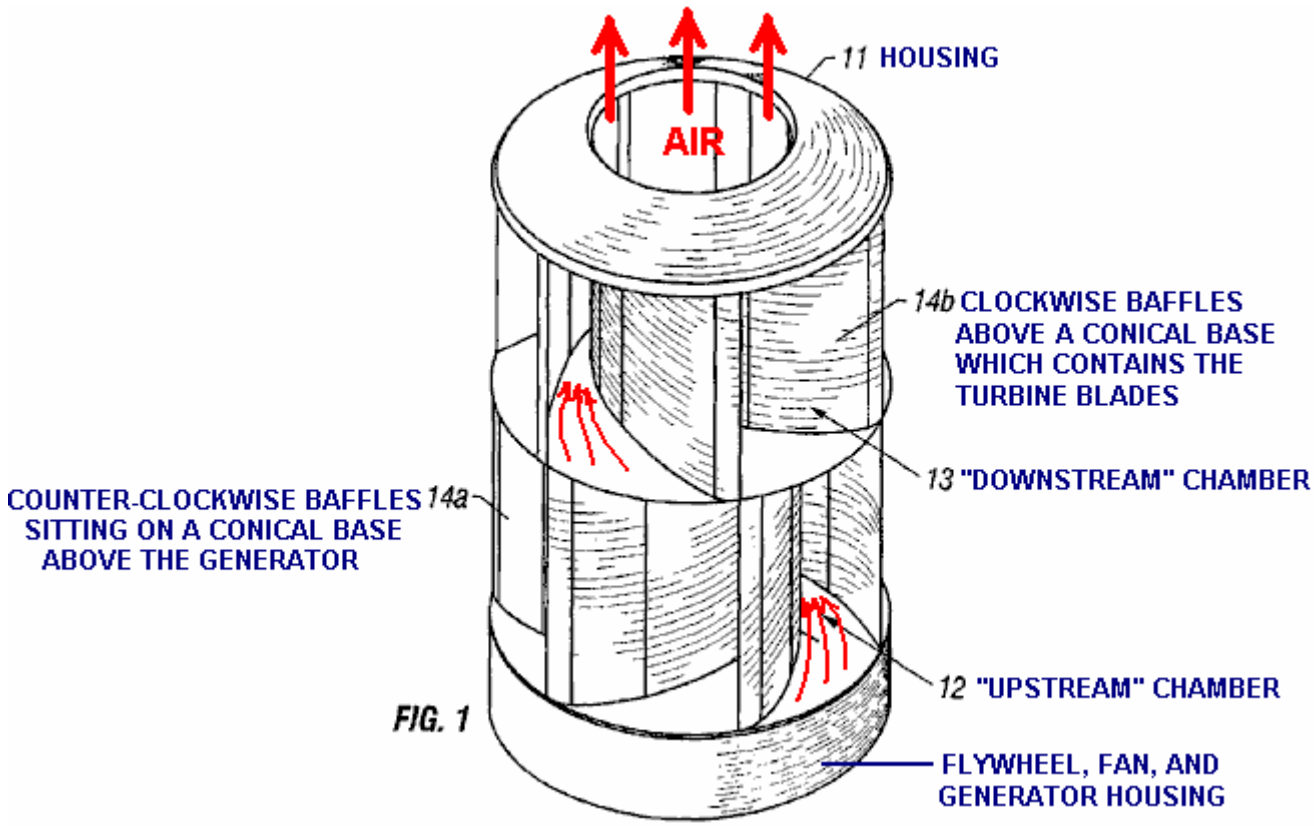

Fig.1 is a perspective view of an embodiment of the present invention which converts wind energy to mechanical or electrical energy. The energy conversion device **10** includes a stationary cowling **11** surrounding an upstream (lower) ring-shaped or doughnut-shaped chamber **12** and a downstream (upper) ring-shaped chamber **13**. The cowling may be constructed of any suitable rigid material such as wood, plastic, metal, or similar. The cowling may be constructed from a transparent material, making the device visually unobtrusive. In the preferred embodiment of the present invention, the cowling is cylindrical and is constructed of a high-grade, ultraviolet-protected plastic.

The cowling **11** includes a set of longitudinal baffles which are curved and arranged in a toroidal pattern. Upstream baffles **14a** are mounted in the upstream annular chamber **12**, and downstream baffles **14b** are mounted in the downstream annular chamber **13**. In the preferred embodiment of the present invention, approximately six toroidal longitudinal baffles are mounted in each chamber. The baffles function to guide the wind into each chamber. The narrowing cross-sectional area between the baffles causes the air to accelerate as it moves toward the centre of the device, creating two high-velocity vortices (an upstream drive vortex and a downstream extraction vortex). Although the invention is described here primarily as a vertically-oriented cylinder, it should be understood that the device may be installed in other positions, such as a horizontal orientation, which results in the device having an upstream annular chamber and a downstream annular chamber which are at the same height. Alternatively, as noted below in connection with **Fig.7**, the device may be inverted when used in water since water vortices move more readily downwards rather than upwards.

In the embodiment illustrated in **Fig.1**, in which low-speed wind is the input energy source, the upstream baffles **14a** and the downstream baffles **14b** are curved in opposite directions. The baffles therefore create two high-velocity vortices which rotate in opposite directions. As described below in connection with **Fig.4** , the direction of the vortex flow is reversed in a turbine located between the upstream annular chamber **12** and the downstream annular chamber **13**, thereby adding additional rotational power to the turbine. In the hydro-electrical embodiment in which flowing water is the input energy source, and in high-speed wind conditions such as when the device is mounted on a vehicle, the upstream baffles and the downstream baffles may be curved in the same direction. In those particular embodiments, therefore, the baffles create two high-velocity vortices which rotate in the same direction. The device may be converted from a low-wind device to a high-wind device by removing the counter-

rotational downstream annular chamber **13** and replacing it with a downstream annular chamber which creates a vortex rotating in the same direction as the drive vortex.

In the preferred embodiment of the present invention, plastic mesh (not shown) may surround the entry and exit openings of the cowling **11** to prevent birds, animals, or debris from entering the device **10**. In addition, should the device fail structurally, any broken parts are contained by the mesh instead of flying out into the vicinity and causing damage or injury.

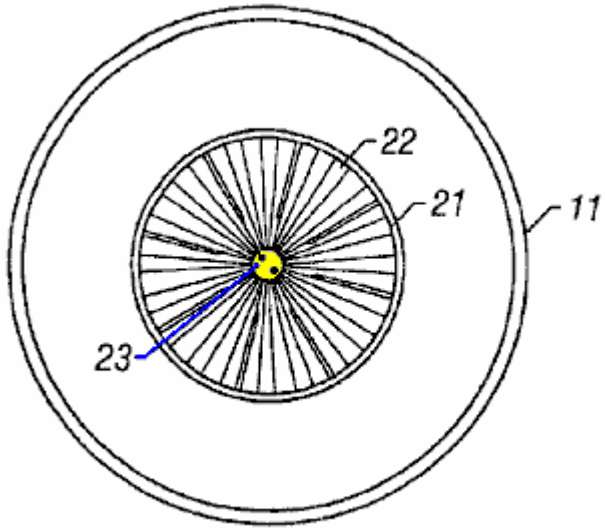

FIG. 2

Fig.2 is a top plan view of the embodiment of **Fig.1**. The top of the cowling **11** includes a central aperture **21** through which the air in the extraction vortex exits the device. In the preferred embodiment, the extraction vortex exits the device rotating in a counter-cyclonic direction (clockwise in the Northern Hemisphere) so that it dissipates rather than creating potentially damaging whirlwinds. The turbine **22** is visible through the aperture. The turbine rotates around a central drive shaft **23** .

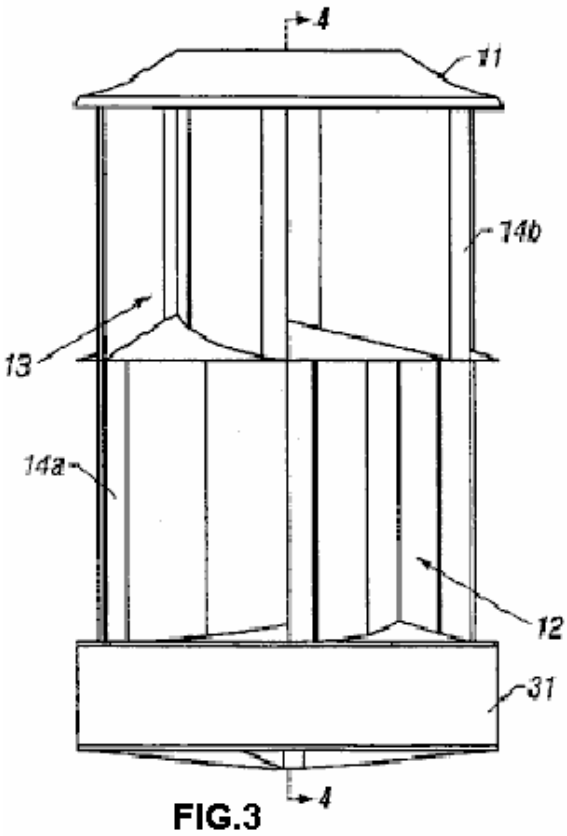

FIG.3

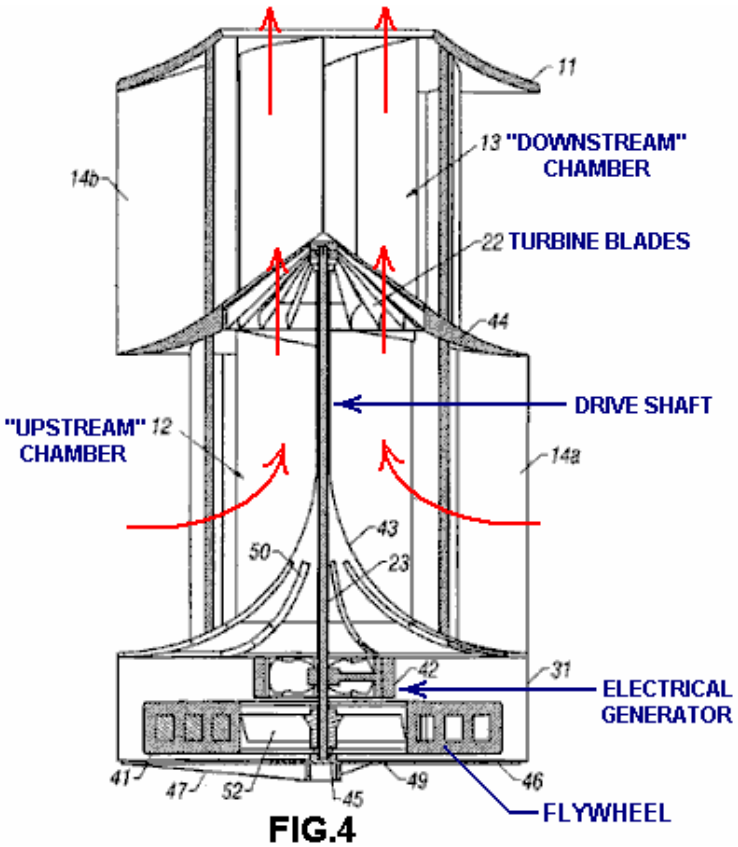

FIG.4

Fig.3 is a side-elevational view of the embodiment of **Fig.1** illustrating the profile of the cowling **11**, the upstream annular chamber **12**, the downstream annular chamber **13**, and the baffles **14a** and **14b**. The cowling may be

mounted on a base **31** and the base **31** may also be used to enclose additional mechanical assemblies such as a flywheel and/or an electrical generator.

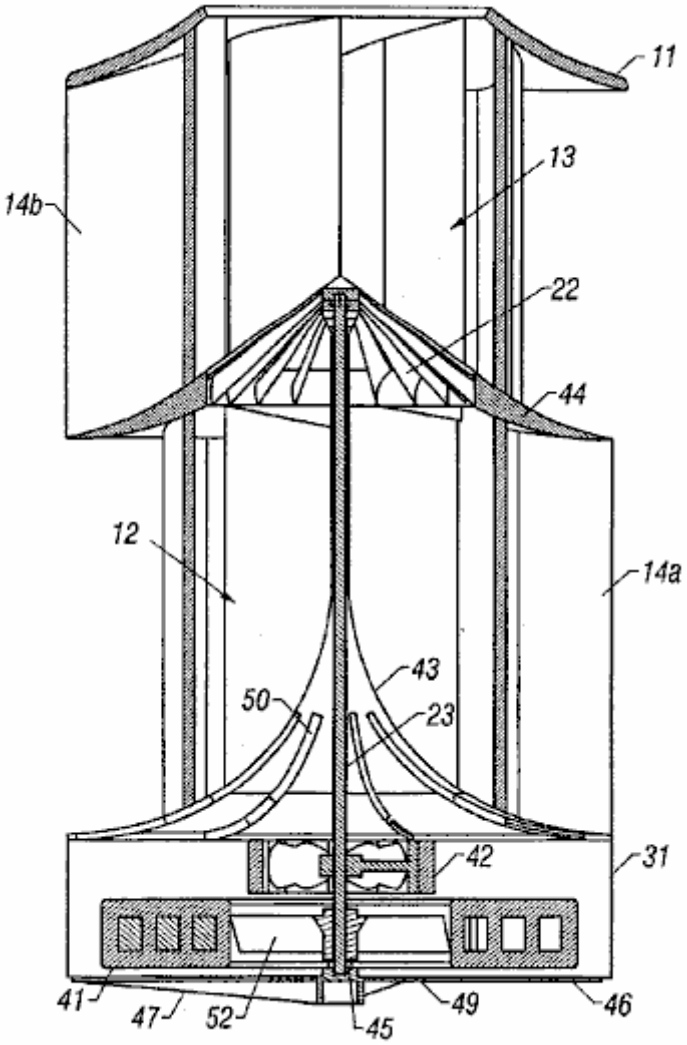

FIG. 4

Fig.4 is a cross-sectional view of the embodiment of **Fig.1** taken along line **4** — **4** of **Fig.3** with a flywheel **41** installed in the base **31** along with an electrical generator **42** to produce electricity. Ambient wind flows simultaneously into the upstream annular chamber **12** through upstream baffles **14a**, and into the downstream annular chamber **13** through the downstream baffles **14b** through the sides of the cowling **11**. The baffles guide the ambient wind towards the centre of the device **10**. A sloping parabolic floor (deck) **43** of the upstream annular chamber **12** causes the wind to flow downstream into the centrally mounted turbine **22** that rotates on the central drive shaft **23**. The device **10** produces power by guiding ambient wind flows into two high-velocity vortices arranged upstream and downstream of the turbine which converts the wind flows to mechanical energy by turning the drive shaft **23**. High-RPM and high-torque are produced by the turbine due to three primary factors:

(1) each blade of the turbine is shaped like a scoop which captures the rotational momentum of the drive vortex;

(2) each blade of the turbine has a cross-sectional shape of an airfoil that generates lift in the direction of rotation of the turbine; and

(3) in low wind conditions, the reversal of the direction of the vortex rotation adds additional force to the turbine in the direction of rotation.

The large flywheel **41** may be attached to the rotating turbine drive shaft **23**. In one embodiment, the flywheel may be a permanent magnet, surrounded by copper windings. The flywheel may serve both as an internal energy storage device due to its angular momentum, and as a dynamo for the generator **42** mounted under the deck **43** of the upstream annular chamber **12**. A solid-state electronic regulator (not shown) may be utilised to control the electrical current load. The regulator maintains a zero load until a preset rotational velocity (RPM) is reached. The load is then increased in order to generate electricity while maintaining the RPM of the turbine at a preselected level.

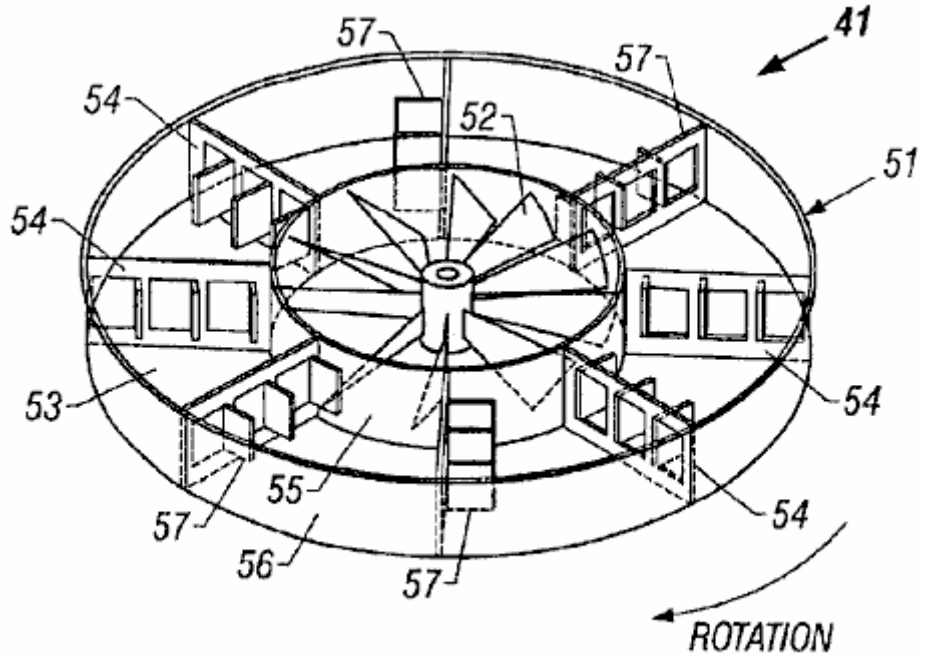

FIG. 5

In **Fig.5** is shown a perspective view of another embodiment of the flywheel **41**. In this embodiment, the flywheel (shown in phantom) includes a hollow disk-shaped shell **51** which is filled with a fluid such as water. The design shown also includes a cooling fan **52** in the hub of the flywheel which rotates with the drive shaft **23** and the flywheel to produce a flow of cooling air that is used to cool the adjacent generator **42** (**Fig.4** and **Fig.7**). The placement of the fan in the hub of the flywheel creates an annular chamber **53** whicht holds the fluid. Within the chamber, there is a set of radial bulkheads **54** extending from the interior wall **55** to the exterior wall **56** of the chamber. Each of the radial bulkheads includes hinged gates or hatches **57**. In the example version shown here, each radial bulkhead has three hinged gates.

During acceleration of the flywheel **41** , these gates **57** open in the opposite direction of rotation. This allows the fluid to flow through the radial bulkheads **54**, reducing start-up inertia. The fluid then slowly comes up to speed due to friction with the interior and exterior walls **55** and **56** of the annular chamber, and due to the motion of the radial bulkheads through the fluid. During deceleration of the flywheel, the gates close because of the forward momentum of the fluid. This creates solid radial bulkheads and causes the flywheel to perform as a solid flywheel. The angular momentum of the flywheel then helps to maintain the angular velocity of the drive shaft **23** when the input power of the wind drops off.

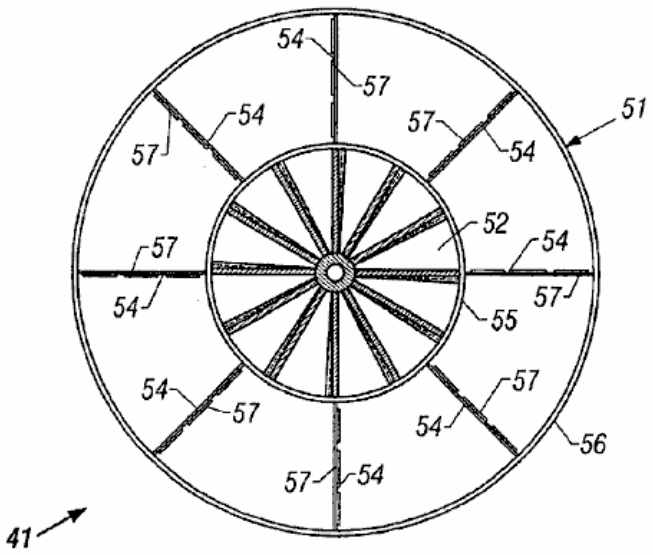

FIG. 6

Fig.6 is a top plan view of the fluid-filled flywheel **41** of **Fig.5** , showing the blades of the cooling fan **52** in the hub of the flywheel, the annular chamber **53**, the radial bulkheads **54**, and the gates **57** in the closed (decelerating) position.

Thus, the fluid-filled flywheel **41** is particularly well suited for use with this energy conversion device **10** of the present invention. The fluid-filled flywheel allows rapid spin-up of the drive shaft **23** by reducing the start-up inertia, but resists deceleration like a solid flywheel. These features can significantly boost the efficiency of a wind-powered or water-powered device that operates with varying input power levels. By simply inverting the flywheel, the fluid-filled flywheel can be used with systems that spin either clockwise or counter-clockwise. As an additional feature, shipping weight is greatly reduced because the fluid can be added at the point of use.

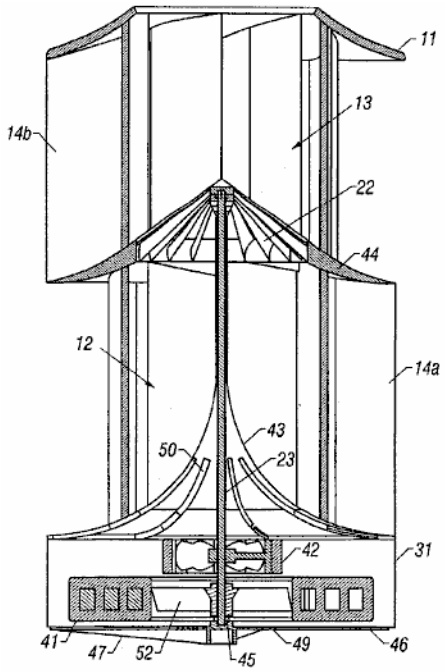

FIG. 4

Referring again to **Fig.4** , an annular central divider (mid-deck) **44** divides the upstream annular chamber **12** from the downstream annular chamber **13**. The top of the mid-deck slopes away from the turbine, causing the ambient wind entering the downstream annular chamber to flow away from the turbine. This creates an area of reduced air pressure on the downstream side of the turbine **22** that increases the flow of air from the upstream annular chamber **12** through the turbine. Each blade of the turbine **22** is a curved airfoil which receives rotational impetus from the rotation of the drive vortex, the reversal of the vortex direction, and aerodynamic lift that is generated by the airfoil in the direction of rotation of the turbine.

In the preferred embodiment of the present invention, the turbine **22** and flywheel **41** may be made of metal. Further, all metal parts may be coated with, for example, plastic, chrome, or paint to prevent corrosion. As discussed above, the flywheel may be a permanent magnet or may be a fluid-filled flywheel. All bearings such as bearing **45** may be magnetic-repulsion-levitation bearings so that there is no physical contact between the moving and stationary elements of the device. The base **31** may be mounted on a support plate **46** and/or a support brace **47**, depending on the structure on which the device is mounted and the orientation of the device.

The central drive shaft **23** may also drive the cooling fan **52** that draws cooling air through vents **49** in the support plate and directs the air through the generator **42**. The heated air may exit through louvers **50** in the parabolic deck **43** of the upstream annular chamber **12** where it then mixes with the driving airflow in the upstream annular chamber to defrost the interior of the device and the turbine **22**.

The device **10** may vary in its dimensions, depending upon the specific application for which it is utilised. For example, the dimensions of a wind-powered device that is mounted on the roof of a house may be between 40 inches and 48 inches in diameter, and between 60 inches and 78 inches in height. In this configuration, the turbine **22** has a diameter approximately one-half the diameter of the exterior of the cowling **11** (i.e. approximately 20 to 24 inches in diameter). Larger versions may be utilised for larger buildings such as factories or office buildings with increased economies of scale. For example, an office building may use a device that is 20 feet in diameter and 20 feet tall with a turbine that is 10 feet in diameter. A vehicle-mounted device (for example, for a passenger car), designed for high-wind conditions, may be about 24 inches in diameter and 6 inches in height. The generator and flywheel, if any, may be mounted inside the contour of the vehicle, or on a luggage rack. A

small hydro-electric version of the device that is placed in a running stream or river may have similar dimensions to the vehicle-mounted device. In addition, since the outflow of the hydro-electric version is directed downward, a deflector may be utilised in shallow bodies of water to prevent erosion of the stream bed.

It should be noted that when the present invention is oriented vertically, the turbine **22**, the generator **42**, and the flywheel **41** rotate around a vertical axis. Therefore, the supporting structures are not subject to the vibration and stress produced by gravity effects in prior art devices in which propellers rotate around a horizontal axis. Moreover, exceptional wind-conversion efficiency is realized from the present invention as it diverts and accelerates the ambient wind flow into vortices that have several times the velocity of the ambient wind flow when they reach the turbine. Additionally, the acceleration of the air flow into the upstream and downstream annular chambers creates a low pressure area that pulls air into the device from an effective cross-sectional area that is greater than the physical cross-sectional area of the device. As a result, the present invention provides a new and improved wind-power conversion device which is quieter, safer, more efficient, and more cost effective than existing devices.

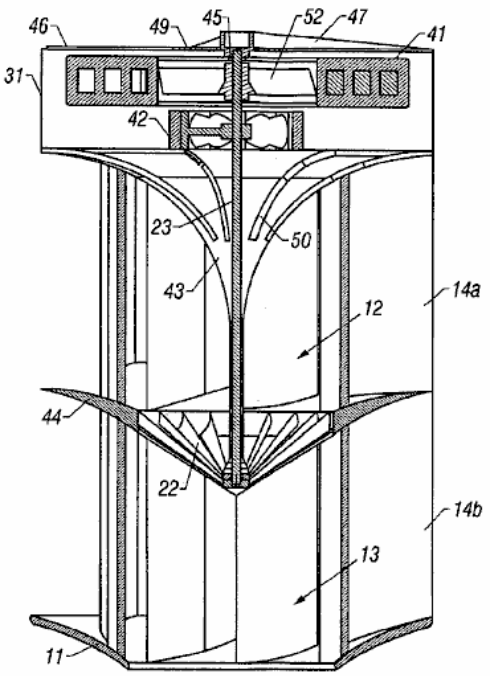

FIG. 7

Referring now to **Fig.7**, there is shown a cross-sectional view of a version of the present invention which converts the energy of flowing water to electrical energy (i.e. a hydro-electrical device). There are three key differences between the hydro-electrical embodiment from the low-wind-powered embodiment of **Figs. 1 to 4**. Firstly, the upstream baffles **14a** and the downstream baffles **14b** curve in the same direction. The baffles therefore create two high-velocity vortices which rotate in the same direction. This is a more efficient design when the fluid flowing through the device is an incompressible fluid such as water. Secondly, the device operates more efficiently when it is inverted and mounted vertically since water vortices move downward due to the force of gravity. The third difference is the ratio of the height of the device to the diameter of the device. As noted above, the hydro-electric embodiment of the device may have a height that is shorter when compared to its diameter, and may have a height that is equal to or less than its diameter.

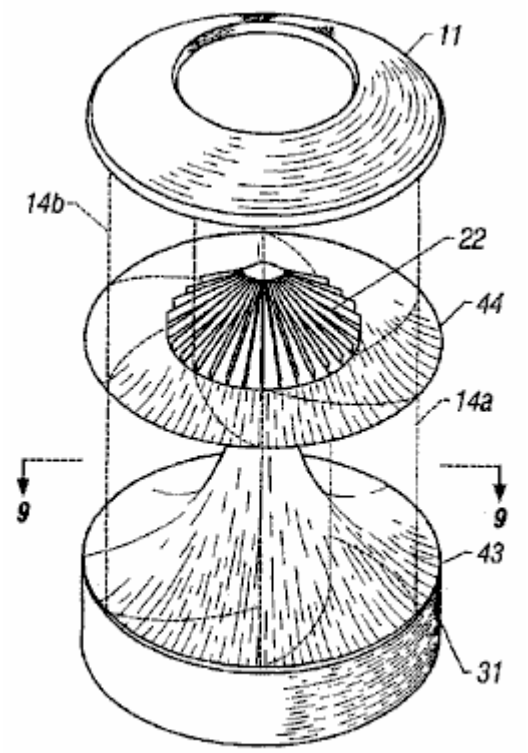

FIG. 8

Fig.8 is a perspective view of the embodiment of **Fig.1** with the toroidal longitudinal baffles **14a** and **14b** drawn in phantom so that the annular central divider (mid-deck) **44** and turbine **22** can be seen.

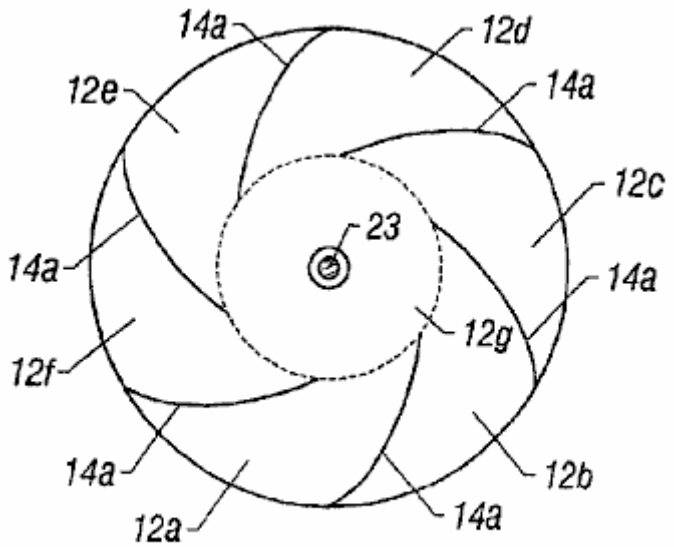

FIG. 9

Fig.9 is a horizontal cross-sectional view of the embodiment of **Fig.1** taken along line **9** — **9** of **Fig.8**. In this view, it can be seen that the upstream annular chamber **12** is divided into a set of smaller chambers **12a** through **12f** by the toroidal longitudinal baffles **14a**. The interior ends of the longitudinal baffles define a central vortex chamber **12g** (illustrated by a dashed circle) in which the upstream vortex is formed, and from which the upstream vortex enters the turbine **22**. The central vortex chamber **12g** has a diameter approximately equal to the diameter of the turbine.

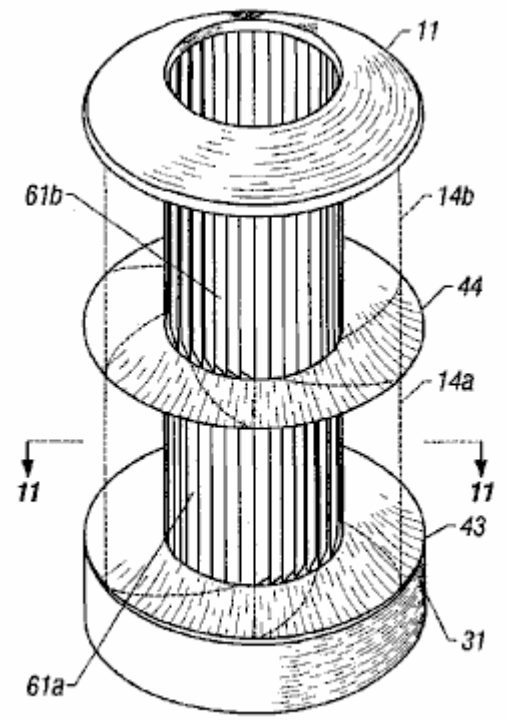

FIG. 10

Fig.10 is a perspective view of a second embodiment of the present invention that converts wind energy to mechanical or electrical energy, with the longitudinal baffles **14a** and **14b** drawn in phantom so that a set of hinged longitudinal louvers **61a** and **61b** can be seen. The hinged louvers are mounted in the openings between the longitudinal baffles. The louvers may be mounted in a circular configuration anywhere from the outside edge of the longitudinal baffles to the inside edge of the baffles. In the version shown, the louvers are longitudinally mounted at the inside edge of the baffles, around the perimeter of the central vortex chamber **12g**. Each of the louvers is hinged on one side (i.e., the windward side as wind enters through the baffles) so that the louver may be opened toward the central vortex chamber by the force of the incoming wind. The width of each louver is slightly greater than the distance between louvers so that each louver slightly overlaps the hinged edge of the next louver. This prevents the louvers from opening outward.

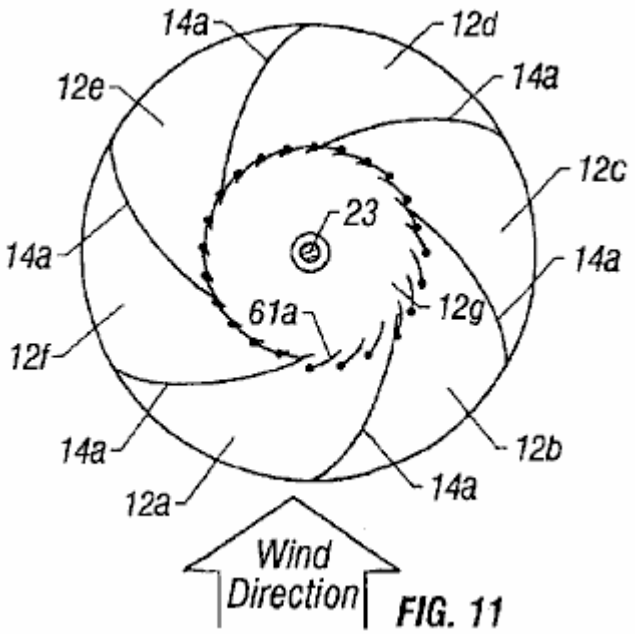

FIG. 11

In **Fig.11** there is shown a horizontal cross-sectional view of the embodiment of **Fig.10** taken along line **11** — **11**. During operation, wind blowing in the direction shown from the outside of the energy conversion device is funnelled by the toroidal longitudinal baffles **14a** into upstream chambers **12a** and **12b**. The baffles block the wind from entering the other chambers **12c** through **12f**. The wind flows through chambers **12a** and **12b**, and enters

the central vortex chamber **12g** by opening the hinged longitudinal louvers **61a** which are mounted between the baffles in the openings defining chambers **12a** and **12b**. The remaining louvers remain closed, preventing the wind from exiting through the sides of the device. Thus, the wind-activated louvers are, in effect, one-way valves allowing the wind to flow into the central vortex chamber through the sides of the device, but only allowing the wind to exit through the top of the chamber, and through the turbine **22**.

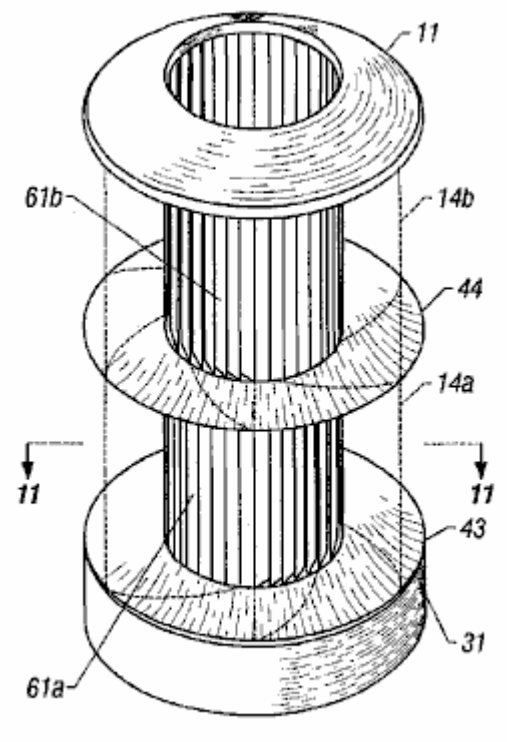

FIG. 10

Referring again to **Fig.10**, it can be seen that the longitudinal louvers **61a** mounted in the upstream chamber **12** are hinged on the opposite side from the louvers **61b** mounted in the downstream chamber **13**. This is because the vortex in the downstream chamber rotates in the opposite direction from the vortex in the upstream chamber, and the downstream toroidal baffles **14b** funnel the wind into the louvers **61b** in the opposite direction. Like the louvers **61a** in the upstream chamber **12**, the louvers **61b** in the downstream chamber **13** act as one-way valves allowing the wind to flow into the central vortex chamber through the sides of the device, but only allowing the wind to exit through the top of the chamber, and out of the device. This configuration helps to maintain the strength of both the upstream and the downstream vortices during operation of the device.

It should be recognized that some degree of improved energy-conversion performance may be obtained in a configuration in which there are toroidal baffles **14a** and hinged louvers **61a** only in the upstream annular chamber **12** because this ensures that all of the wind or other fluid entering the sides of the upstream chamber flows through the turbine. The addition of toroidal baffles **14b** in the downstream annular chamber **13** provides additional improved performance, particularly when the direction of rotation of the downstream vortex is opposite the direction of the upstream vortex. Optimum energy-conversion performance is provided by a device having oppositely configured toroidal baffles **14a** and **14b**, and oppositely hinged louvers **61a** and **61b**, for both the upstream annular chamber **12** and the downstream annular chamber **13**.

It is to be understood that even though numerous characteristics and advantages of the present invention have been set forth in the foregoing description, the disclosure is illustrative only, and changes may be made in detail, especially in matters of size, shape, and arrangement of parts within the principles of the invention to the full extent indicated by the broad general meaning of the terms in which the appended claims are expressed.

Claims:

What is claimed is:

1. A fluid-powered energy conversion device for converting energy in a moving fluid into mechanical energy, said device comprising: a rigid cylindrical frame having an upstream annular chamber and a downstream annular chamber, each of said chambers having sides that are open to allow entry of the moving fluid; a first set of baffles

longitudinally mounted in the upstream chamber that operate to create in the upstream chamber, an upstream drive vortex rotating in a first direction when the moving fluid enters the upstream chamber through the upstream chamber's open sides and through openings between the baffles; a first set of hinged louvers positioned in the openings between the first set of baffles and encircling an upstream central vortex chamber cantered around a central longitudinal axis of the device, said first set of louvers being operable to permit entry of the moving fluid into the upstream central vortex chamber only when the fluid is rotating in the first direction, and to prevent the fluid from exiting the upstream central vortex chamber through the sides of the device; a floor of the upstream annular chamber that slopes toward the downstream chamber as the floor approaches the central longitudinal axis of the device, said floor causing the drive vortex to flow downstream through the upstream central vortex chamber and pass through a central aperture located between the upstream annular chamber and the downstream annular chamber; a longitudinal drive shaft centrally mounted in the central aperture; and a turbine mounted on the drive shaft in the central aperture, said turbine being rotated by the drive vortex as the drive vortex passes through the central aperture.

2. The fluid-powered energy conversion device of claim 1 further comprising a second set of baffles longitudinally mounted in the downstream chamber that operate to create in the downstream chamber, a downstream extraction vortex rotating in a direction opposite to the first direction when the moving fluid enters the downstream chamber through the downstream chamber's open sides and through openings between the baffles, whereby the turbine is rotated by the drive vortex as the drive vortex passes through the turbine and reverses direction to match the direction of the extraction vortex.

3. The fluid-powered energy conversion device of claim 2 further comprising an annular central divider between the upstream chamber and the downstream chamber, said divider having a downstream surface that slopes downstream as it approaches the central longitudinal axis of the device, said downstream surface causing the extraction vortex to flow downstream, thereby creating an area of reduced fluid pressure downstream of the turbine.

4. The fluid-powered energy conversion device of claim 2 further comprising a second set of hinged louvers positioned in the openings between the second set of baffles and encircling a downstream central vortex chamber cantered around the central longitudinal axis of the device, said second set of louvers being operable to permit entry of the moving fluid into the downstream central vortex chamber only when the fluid is rotating in the direction opposite to the first direction, and to prevent the fluid from exiting the downstream central vortex chamber through the sides of the device.

5. The fluid-powered energy conversion device of claim 4 wherein said first set of baffles are curved to form a toroidal pattern in the first direction, and said second set of baffles are curved to form a toroidal pattern in the direction opposite to the first direction.

6. The fluid-powered energy conversion device of claim 5 wherein said turbine comprises a set of rotating blades, each of said blades having a cross-sectional shape of a curved airfoil that generates a lift force, said lift force being directed in the direction of rotation of the turbine.

7. The fluid-powered energy conversion device of claim 1 further comprising a flywheel mounted on the drive shaft, said flywheel having sufficient mass to operate as an internal energy storage device due to its angular momentum.

8. The fluid-powered energy conversion device of claim 7 wherein said flywheel is a permanent magnet.

9. The fluid-powered energy conversion device of claim 7 wherein said flywheel is a fluid-filled flywheel that rotates with the drive shaft in a direction of rotation, said fluid-filled flywheel comprising: a hollow disk-shaped shell filled with fluid; and a set of radial bulkheads that separate the interior of the shell into separate sections, each of said bulkheads having at least one gate pivotally mounted thereon to open in a direction opposite to the direction of rotation, said gate covering an aperture in the bulkhead when the gate is pivoted to a closed position, and said gate opening the aperture when the gate is pivoted to an open position; whereby the gates are opened by the fluid when the flywheel accelerates in the direction of rotation, thus allowing the fluid to flow through the apertures in the bulkheads and reduce start-up inertia of the flywheel, and whereby the gates are closed by the fluid when the flywheel decelerates, thus preventing the fluid from flowing through the apertures, and causing the flywheel to maintain angular momentum like a solid flywheel.

10. The fluid-powered energy conversion device of claim 9 wherein the hollow disk-shaped shell includes: an annular compartment filled with the fluid; and a cooling fan mounted in a central hub section of the shell.

11. The fluid-powered energy conversion device of claim 1 further comprising an electrical generator mounted on the drive shaft, said generator converting mechanical energy from the rotation of the shaft into electrical energy.

12. The fluid-powered energy conversion device of claim 11 further comprising a cooling fan mounted on the drive shaft, said cooling fan directing cooling air through the generator.

13. A wind-powered energy conversion device for converting wind energy into mechanical energy, said device comprising: a rigid cylindrical frame having an upstream annular chamber, a downstream annular chamber, and an annular central divider between the upstream chamber and the downstream chamber, each of said chambers having sides that are open to allow entry of ambient wind, and said annular central divider having a central aperture therein and having a downstream surface that slopes downstream as it approaches a central longitudinal axis of the device; a first set of baffles longitudinally mounted in the upstream chamber and curved to form a toroidal pattern that operates to create in an upstream central vortex chamber cantered around a central longitudinal axis of the device, an upstream drive vortex rotating in a first direction when the ambient wind enters the upstream chamber through the upstream chamber's open sides and through openings between the baffles; a first set of hinged louvers positioned in the openings between the first set of baffles and encircling the upstream central vortex chamber, said first set of louvers being operable to permit entry of the wind into the upstream central vortex chamber only when the wind is rotating in the first direction, and to prevent the wind from exiting the upstream central vortex chamber through the sides of the device; a second set of baffles longitudinally mounted in the downstream chamber and curved to form a toroidal pattern operable to create in a downstream central vortex chamber cantered around the central longitudinal axis of the device, a downstream extraction vortex rotating in a direction opposite to the first direction when the ambient wind enters the downstream chamber through the downstream chamber's open sides and through openings between the baffles; a second set of hinged louvers positioned in the openings between the second set of baffles and encircling the downstream central vortex chamber, said second set of louvers being operable to permit entry of the wind into the downstream central vortex chamber only when the wind is rotating in the direction opposite to the first direction, and to prevent the wind from exiting the downstream central vortex chamber through the sides of the device; a floor of the upstream annular chamber that slopes downstream as the floor approaches a central longitudinal axis of the device, said floor causing the drive vortex to flow downstream and pass through the central aperture in the annular central divider; a longitudinal drive shaft centrally mounted in the central aperture; and a turbine mounted on the drive shaft in the central aperture, said turbine comprising a set of rotating blades, each of said blades having a cross-sectional shape of a curved airfoil that generates a lift force, said lift force being directed in the direction of rotation of the turbine, said turbine being rotated by the drive vortex as the drive vortex passes through the turbine and reverses direction to match the direction of the extraction vortex.

14. The wind-powered energy conversion device of claim 13 further comprising a flywheel mounted on the drive shaft, said flywheel having sufficient mass to operate as an internal energy storage device due to its angular momentum.

15. The wind-powered energy conversion device of claim 13 further comprising an electrical generator mounted on the drive shaft, said generator converting mechanical energy from the rotation of the shaft into electrical energy.

16. The wind-powered energy conversion device of claim 13 wherein the extraction vortex rotates in a counter-cyclonic direction so that the extraction vortex dissipates after it exits the downstream chamber.

17. A wind-powered energy conversion device for converting high-speed wind energy into mechanical energy, said device comprising: a rigid cylindrical frame having an upstream annular chamber and a downstream annular chamber, each of said chambers having sides that are open to allow entry of the high-speed wind; a first set of baffles longitudinally mounted in the upstream chamber that create in an upstream central vortex chamber, an upstream drive vortex rotating in a first direction when the high-speed wind enters the upstream chamber through the upstream chamber's open sides and through openings between the baffles; a first set of hinged louvers positioned in the openings between the first set of baffles and encircling the upstream central vortex chamber, said first set of louvers being operable to permit entry of the wind into the upstream central vortex chamber only when the wind is rotating in the first direction, and to prevent the wind from exiting the upstream central vortex chamber through the sides of the device; a second set of baffles longitudinally mounted in the downstream chamber that create in a downstream central vortex chamber, a downstream extraction vortex rotating in the first direction when the high-speed wind enters the downstream chamber through the downstream chamber's open sides and through openings between the baffles; a second set of hinged louvers positioned in the openings between the second set of baffles and encircling the downstream central vortex chamber, said second set of louvers being operable to permit entry of the wind into the downstream central vortex chamber only when the wind is rotating in the first direction, and to prevent the wind from exiting the downstream central vortex chamber through the sides of the device; a floor of the upstream annular chamber that slopes downstream as the floor approaches a central longitudinal axis of the device, said floor causing the drive vortex to flow downstream and pass through a central aperture located between the upstream annular chamber and the downstream annular chamber; a longitudinal drive shaft centrally mounted in the central aperture; and a turbine mounted on the drive

shaft in the central aperture, said turbine being rotated by the drive vortex as the drive vortex passes through the turbine.

18. The wind-powered energy conversion device of claim 17 further comprising a fluid-filled flywheel mounted on the drive shaft that rotates with the drive shaft in a direction of rotation, said fluid-filled flywheel comprising: a hollow disk-shaped shell filled with fluid; and a set of radial bulkheads that separate the interior of the shell into separate sections, each of said bulkheads having at least one gate pivotally mounted thereon to open in a direction opposite to the direction of rotation, said gate covering an aperture in the bulkhead when the gate is pivoted to a closed position, and said gate opening the aperture when the gate is pivoted to an open position; whereby the gates are opened by the fluid when the flywheel accelerates in the direction of rotation, thus allowing the fluid to flow through the apertures in the bulkheads and reduce start-up inertia of the flywheel, and whereby the gates are closed by the fluid when the flywheel decelerates, thus preventing the fluid from flowing through the apertures, and causing the flywheel to maintain angular momentum like a solid flywheel.

19. A water-powered energy conversion device for converting energy in a moving stream of water into mechanical energy, said device comprising: a rigid cylindrical frame having an upstream annular chamber and a downstream annular chamber, each of said chambers having sides that are open to allow entry of the stream of water; a first set of baffles longitudinally mounted in the upstream chamber that create in an upstream central vortex chamber, an upstream drive vortex rotating in a first direction when the stream of water enters the upstream chamber through the upstream chamber's open sides and through openings between the baffles; a first set of hinged louvers positioned in the openings between the first set of baffles and encircling the upstream central vortex chamber, said first set of louvers being operable to permit entry of the water into the upstream central vortex chamber only when the water is rotating in the first direction, and to prevent the water from exiting the upstream central vortex chamber through the sides of the device; a second set of baffles longitudinally mounted in the downstream chamber that create in a downstream central vortex chamber, a downstream extraction vortex rotating in the first direction when the stream of water enters the downstream chamber through the downstream chamber's open sides and through openings between the baffles; a second set of hinged louvers positioned in the openings between the second set of baffles and encircling the downstream central vortex chamber, said second set of louvers being operable to permit entry of the water into the downstream central vortex chamber only when the water is rotating in the first direction, and to prevent the water from exiting the downstream central vortex chamber through the sides of the device; a floor of the upstream annular chamber that slopes downstream as the floor approaches a central longitudinal axis of the device, said floor causing the drive vortex to flow downstream and pass through a central aperture located between the upstream annular chamber and the downstream annular chamber; a longitudinal drive shaft centrally mounted in the central aperture; and a turbine mounted on the drive shaft in the central aperture, said turbine being rotated by the drive vortex as the drive vortex passes through the turbine.

20. The water-powered energy conversion device of claim 19 further comprising a fluid-filled flywheel mounted on the drive shaft that rotates with the drive shaft in a direction of rotation, said fluid-filled flywheel comprising: a hollow disk-shaped shell filled with fluid; and a set of radial bulkheads that separate the interior of the shell into separate sections, each of said bulkheads having at least one gate pivotally mounted thereon to open in a direction opposite to the direction of rotation, said gate covering an aperture in the bulkhead when the gate is pivoted to a closed position, and said gate opening the aperture when the gate is pivoted to an open position; whereby the gates are opened by the fluid when the flywheel accelerates in the direction of rotation, thus allowing the fluid to flow through the apertures in the bulkheads and reduce start-up inertia of the flywheel, and whereby the gates are closed by the fluid when the flywheel decelerates, thus preventing the fluid from flowing through the apertures, and causing the flywheel to maintain angular momentum like a solid flywheel.

21. A fluid-powered energy conversion device for converting energy in a moving fluid into mechanical energy, said device comprising: a rigid cylindrical frame having an upstream annular chamber and a downstream annular chamber cantered around a longitudinal axis, each of said chambers having sides that are open to allow entry of the moving fluid in a direction approximately perpendicular to the longitudinal axis, said upstream and downstream chambers being separated by an annular divider having a central aperture therein; a longitudinal drive shaft centrally mounted along the longitudinal axis and passing through the central aperture; a turbine mounted on the drive shaft in the central aperture; means for creating in the upstream chamber an upstream drive vortex rotating in a first direction when the moving fluid enters the upstream chamber through the upstream chamber's open sides: means for creating in the downstream chamber, a downstream extraction vortex rotating in a second direction opposite to the first direction when the moving fluid enters the downstream chamber through the downstream chamber's open sides; end means for causing the drive vortex to flow downstream and pass through the turbine, said turbine being rotated by the drive vortex as the drive vortex passes through the turbine and reverses direction to match the direction of the extraction vortex.

22. The fluid-powered energy conversion device of claim 21 wherein the means for creating an upstream drive vortex in the upstream chamber includes a first set of longitudinally mounted baffles having openings between

them through which the moving fluid enters the upstream chamber, said first set of baffles being curved to form a toroidal pattern in the first direction.

23. The fluid-powered energy conversion device of claim 22 wherein the means for creating an upstream drive vortex in the upstream chamber includes a first set of hinged louvers positioned in the openings between the first set of baffles and encircling the upstream chamber, said first set of louvers being operable to permit entry of the moving fluid into the upstream chamber only when the fluid is rotating in the first direction, and to prevent the fluid from exiting the upstream chamber through the sides of the device.

24. The fluid-powered energy conversion device of claim 23 wherein the means for creating a downstream extraction vortex in the downstream chamber includes a second set of longitudinally mounted baffles having openings between them through which the moving fluid enters the upstream chamber, said second set of baffles being curved to form a toroidal pattern in the second direction.

25. The fluid-powered energy conversion device of claim 24 wherein the means for creating a downstream extraction vortex in the downstream chamber includes a second set of hinged louvers positioned in the openings between the second set of baffles and encircling the downstream chamber, said second set of louvers being operable to permit entry of the moving fluid into the downstream chamber only when the fluid is rotating in the second direction, and to prevent the fluid from exiting the downstream chamber through the sides of the device.

26. The fluid-powered energy conversion device of claim 25 wherein the means for causing the drive vortex to flow downstream includes means for creating a pressure differential in which the fluid pressure in the downstream chamber is less than the fluid pressure in the upstream chamber.

27. The fluid-powered energy conversion device of claim 26 wherein the means for creating a pressure differential includes a downstream surface of the annular divider that slopes downstream as it approaches the central longitudinal axis of the device, said downstream surface causing the extraction vortex to flow downstream, thereby creating an area of reduced fluid pressure downstream of the turbine.

28. The fluid-powered energy conversion device of claim 27 wherein the means for causing the drive vortex to flow downstream includes a floor of the upstream annular chamber that slopes toward the downstream chamber as the floor approaches the central longitudinal axis of the device, said floor causing the drive vortex to flow downstream and pass through the turbine.

29. The fluid-powered energy conversion device of claim 21 further comprising a fluid-filled flywheel that rotates with the drive shaft in a direction of rotation, said fluid-filled flywheel comprising: a hollow disk-shaped shell filled with fluid: and a set of radial bulkheads that separate the interior of the shell into separate sections, each of said bulkheads having at least one gate pivotally mounted thereon to open in a direction opposite to the direction of rotation, said gate covering an aperture in the bulkhead when the gate is pivoted to a closed position, and said gate opening the aperture when the gate is pivoted to an open position; whereby the gates are opened by the fluid when the flywheel accelerates in the direction of rotation, thus allowing the fluid to flow through the apertures in the bulkheads and reduce start-up inertia of the flywheel, and whereby the gates are closed by the fluid when the flywheel decelerates, thus preventing the fluid from flowing through the apertures, and causing the flywheel to maintain angular momentum like a solid flywheel.

Nilson Barbosa and Cleriston Leal

WO Patent 2013/104043 18th July 2013 Inventors: Nilson Barbosa and Cleriston Leal

ELECTRIC ENERGY GENERATION SYSTEM WITH FEEDBACK

Note: These three patents are in Portuguese and what is shown here is a low-quality attempt at translation into English using a translation program. The originals can be downloaded free from: http://worldwide.espacenet.com/singleLineSearch?locale=en_EP.

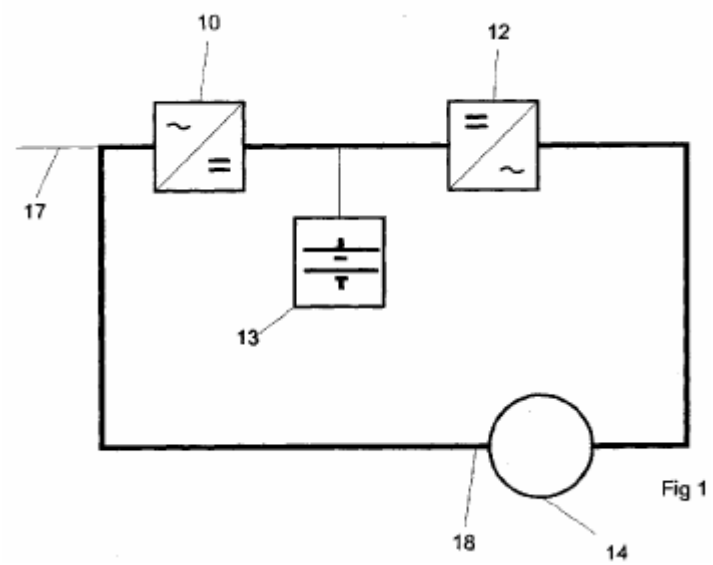

Fig 1

Abstract:
The present invention relates to electric energy generation equipment comprising a basic circuit formed by a rectifier (**10**), for example, an AC/DC converter connected in series to an inverter (**12**), for example, a DC/AC converter, and a bank of batteries (**13**) connected in series between the rectifier (**10**) and the inverter (**12**). An electron-capturing element (**14**), which can be either a free space electron-capturing element or, alternatively, an earth electron-capturing element, is connected in series to the basic circuit formed by the rectifier (**10**), the inverter (**12**) and the battery assembly (**13**). The bank of batteries (**13**) powers the basic circuit because it is connected to the system. Consequently, the inverter (**12**) converts direct current into alternating current and supplies this current to the electron-capturing element (**14**). After receiving the electric current from the inverter (**12**), the electron-capturing element (**14**) starts capturing electrons from the alternating current and powering the rectifier (**10**), which converts the alternating current into a direct current in order to recharge the bank of batteries (**13**) and power the inverter (**12**) which powers the electron-capturing element, closing the feedback loop, and also providing electric energy for consumption by external loads.

WIPO Patent Application WO/2013/104043 Filing Date: 01/11/2013
Application Number: BR2013/000016 Publication Date: 07/18/2013

Assignee: EVOLUÇÕES ENERGIA LTDA (Rua Santa Tereza 1427-B Centro - Imperatriz -MA, CEP -470 - Maranhão, 65900, BR)

SELF-POWERED ELECTRICITY GENERATOR.

Technical field
The present invention relates to a device for generating electricity, in particular self-powered equipment for generating electricity.

Description of the Related Art
There are many methods for generating electricity using electromagnetism, but all of these are electromechanical devices using magnets and have limited generating capacity and an ecological impact which makes them unsuited to large scale projects.

Objectives of the Invention

The aim of this invention is the sustainable generation of electricity, using a generator which is able to produce large amounts of electricity from an extremely low input current, which initially is supplied by a bank of batteries, but subsequently is supplied by the output from the generator which is also able to power external loads.

The above objective, and other objectives, are achieved by the present invention through the use of a typical Uninterruptible Power Supply circuit comprising of an AC/DC rectifier feeding a battery bank which powers a DC/AC inverter, which is connected to a device to trap electrons from space (as described in Brazilian patent application No. BR1020120008378 of 13th January 2012) or alternatively, a device which extracts electrons from the Earth (as described in Brazilian patent application No. BR1020120008386 of 13th January 2012), which then passes the extracted electrons to the AC/DC rectifier, charging the battery bank, thus closing the loop as well as providing electricity to power external loads.

The self-powered system for generating electricity from the present invention can be fixed or mobile. It is fixed when using electron capture from the earth due to the ground connection, or mobile when using electron capture from space.

The self-powered electricity generating system of this invention may be configured in several different ways, each using the same inventive concept but using different arrangements of components. Different versions include single-phase, two-phase or three-phase versions, producing outputs of any power and voltage.

Brief Description of the Drawings

The present invention will now be described with the aid of drawings, but this patent is not limited to the versions and details shown in these drawings, although they show additional details and advantages of the present invention.

The drawings:

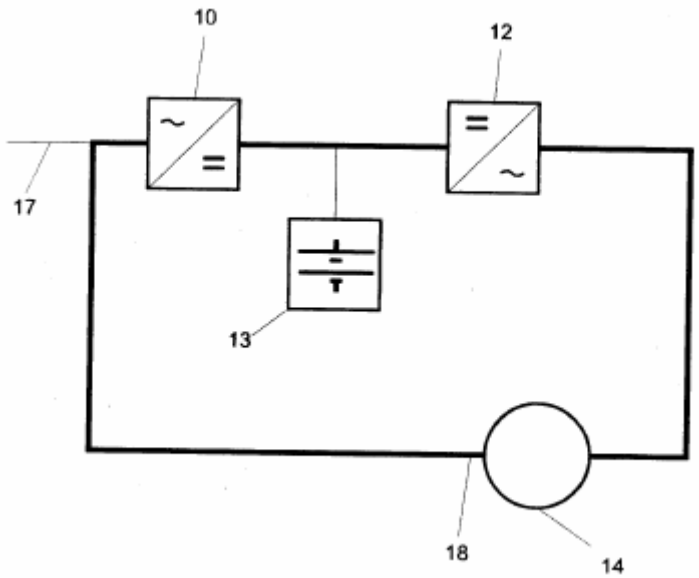

Figure 1 - shows a basic circuit system for self-powered electricity generation of the present invention

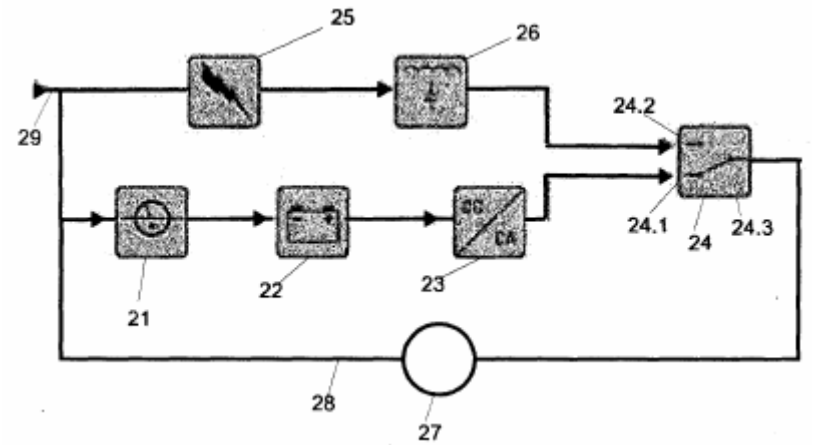

Figure 2 - shows a first embodiment of the constructive system for self-powered electricity generation of the present invention;

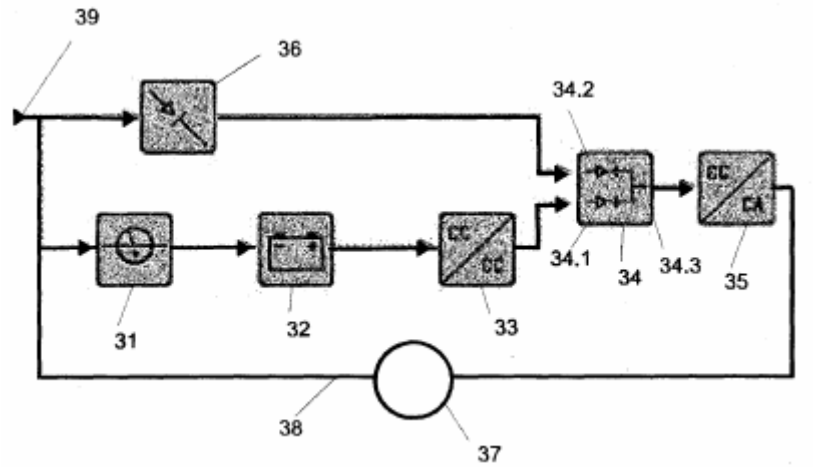

Figure 3 - shows a second embodiment of the self-powered system for generating electricity of the present invention;

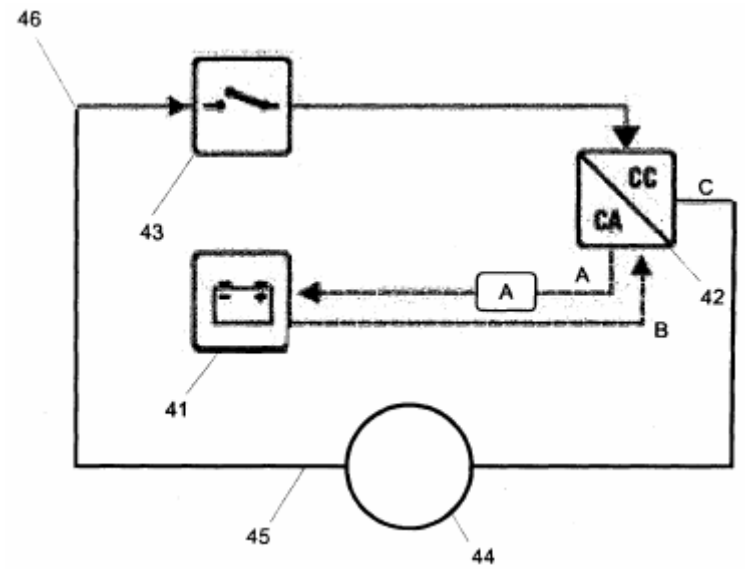

Figure 4 - shows a third embodiment of the self-powered system for generating electricity of the present invention;

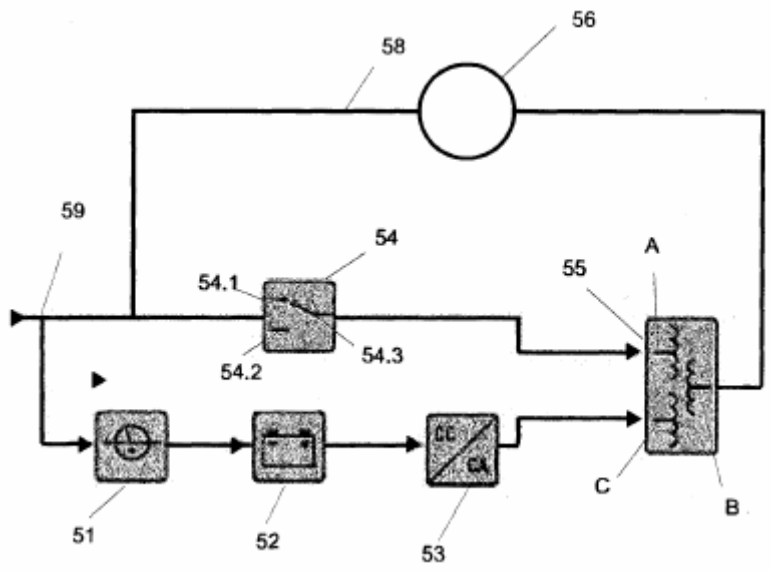

Figure 5 - shows a fourth embodiment of the self-powered system for generating electricity of the present invention;

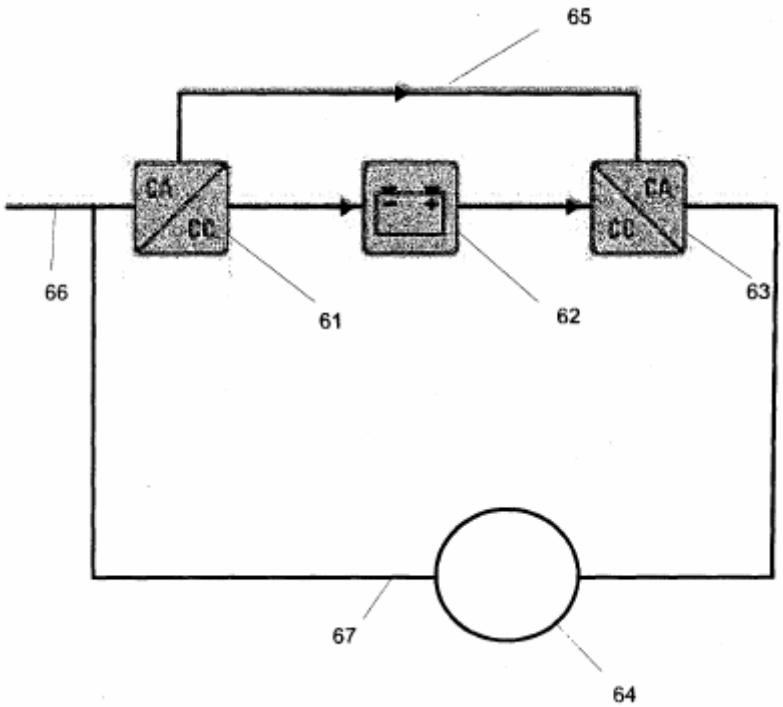

Figure 6 - shows a fifth embodiment of the self-powered system for generating electricity of the present invention;

Detailed description of the Invention:

There are different ways of closing the self-feeding cycle depending on the circuit configuration chosen. Some of these arrangements are shown in **Figures 2** to **6**, wherein the main circuitry continues to oscillate, continuously generating instant electricity.

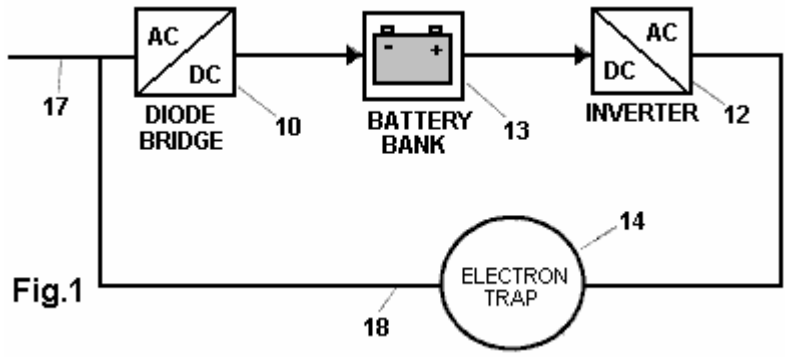

Fig.1

As shown in **Fig.1**, the self-powered system for generating electricity comprises a basic circuit consisting of a rectifier (AC/DC converter) **10** which is connected in series to an inverter (DC/AC) **12**. A bank of batteries **13** is connected between the rectifier **10** and the inverter **12**. The output from the DC/AC inverter **12**, connects to an electron-trap **14** which can extract electrons from space (as described in Brazilian patent application No. BR1020120008378 of 13th January 2012) or alternatively, extracts electrons from the Earth (as described in Brazilian patent application No. BR1020120008386 of 13th January 2012).

When connected, the battery bank **13** provides power to the DC/AC inverter **12** which converts the direct current into alternating current and provides current to the electron-trap **14**. The output of the electron trap **14** is passed through wire **18**, to the AC/DC bridge rectifier **10**, which keeps the battery bank charged as well as powering the DC/AC inverter **12**. Additional power is passed to external equipment through wire **17**.

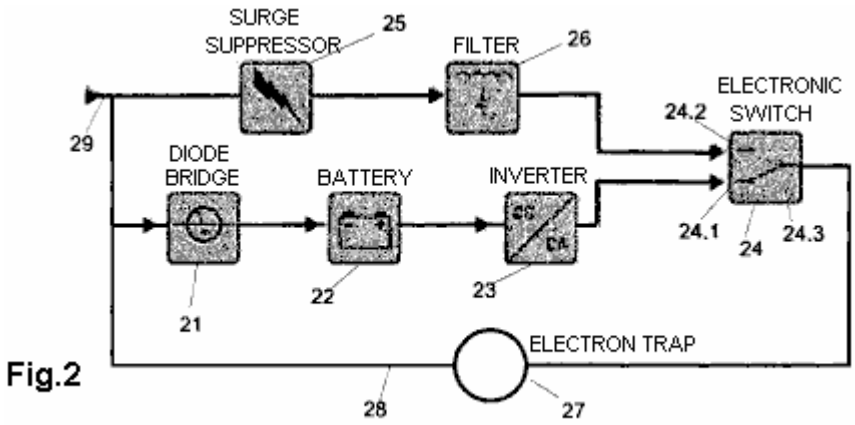

Fig.2

Fig.2, shows another embodiment of the system of this self-powered electric power generation equipment. It comprises a typical Uninterruptible Power Supply circuit of a battery charger (AC/DC converter) **21** connected to a drive device (a DC/AC inverter) **23** and between them, a battery bank **22** forming the basic circuit. Additional devices are an electron-trap **27** which may collect free electrons from space (as defined in Brazilian patent application No. BR1020120008378 of 13th January 2012) or, alternatively, collects electrons from the Earth (as described in Brazilian patent application No. BR1020120008386 of 13th January 2012). The 3-phase electronic switch **24** normally connects **24.1** to **24.3** connecting the electron trap **27** to inverter **23**. Connected in parallel is the surge suppressor **25**, which, when activated, via filter **26**, causes switch **24** to disconnect the **24.3** to **24.1** link and instead, connect **24.3** to **24.2**.

An alternative arrangement for use in emergency situations, is to use the system no longer self-powered. For this, the system is comprised of a power input from an external power source, directly to the interconnection point **29** to provide power to surge suppressor **25**, which provides power to feed the power output point **28** in order to power external loads. When the electron-trap **27** is turned off, the electronic transfer switch **24** reverts to its default position which connects point **24.1** to point **24.3** causing the circuit to function, once again, in its self-feeding mode. As soon as the electron sensor **27** provides sufficient power to the over-voltage sensor **25**, it operates the transfer switch **24** through filter **26**, ending the self-feeding phase and supplying energy directly to the power output point **28**, in order to feed external loads.

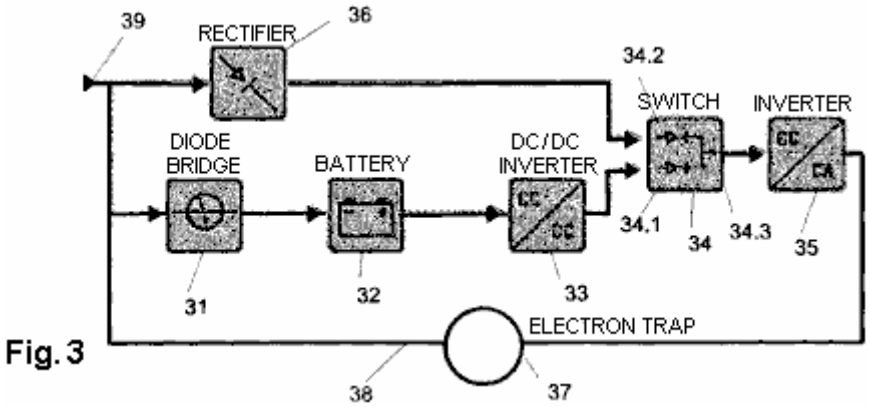

Fig. 3

Fig.3 shows another embodiment of the self-powered system for generating electricity, comprising a device which includes the basic circuit of a typical Uninterruptible Power Supply, consisting of a battery charger (AC/DC converter) **31** connected to a drive device (inverter DC/AC) **35** and attached to them, a battery bank **32**. This basic circuit together with other devices is connected to an electron-trap **37** for collecting free electrons from surrounding space or, alternatively, an Earth-connected electron trap **37**. We have then, a bank of batteries **32** connected to the DC/DC converter **33**, which is connected to the phase transfer switch **34 / 34.1** which is connected to point **34.3**, which connects to the inverter **35**, and so, the electron-trap **37**.

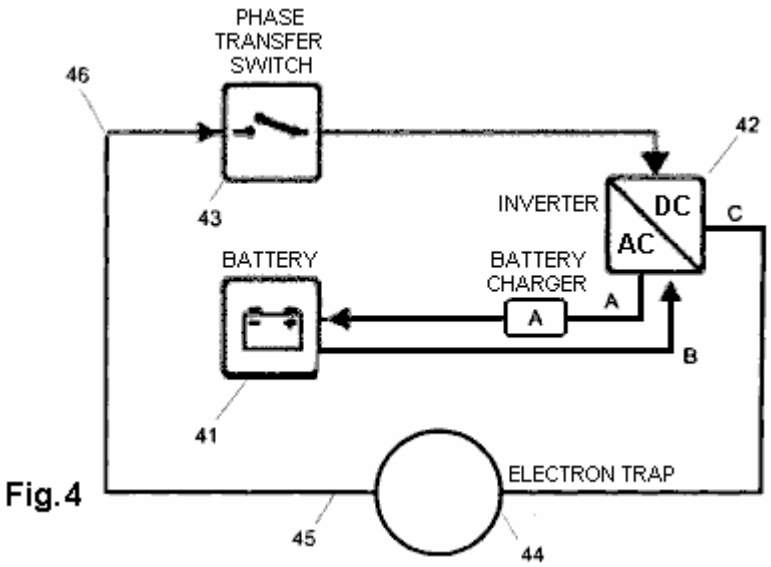

Fig. 4

Fig.4 shows another embodiment of the system for self-powered electricity generation which is comprised of a basic circuit of a typical uninterruptible power supply, consisting of a battery charger (AC/DC converter) **A** connected to an inverter (DC/AC) **42** and attached to them, battery bank **41**, and this basic circuit together with other devices are connected to a free space electron-capture device **44** or an earth-connection electron-trap **44**. Comprising thus, a battery charger **A** connected to a battery bank **41**, which is connected in series with inverter **42** at point **B** which is in series with point **C** of inverter **42** which is in series with the electron sensor **44**, which is in series with the phase transfer switch **43** via the three-phase load output connection point **45**. The phase transfer switch **43** is in series with the inverter **42**, which is connected in series the (AC/DC converter) battery charger **A** feeding the battery bank **41**.

An alternative construction for use in emergency situations, in which the system ceases to be self-powered, the system may include power input from an external power source, via the interconnection point **46**, thus providing electricity output **45**, to power external loads. The battery bank **41** provides power to the inverter **42** which converts the direct current into alternating current and feeds the electron trap **44**. The phase transfer switch closes when the batteries need recharging.

Sensor **44** captures electrons, producing alternating current, which feeds the phase transfer switch **43** with alternating current input power. The phase transfer switch **43** feeds the inverter **42** which charges the batteries, closing the self-powering loop which provides power at the output **45**, feeding both the power input and any external loads.

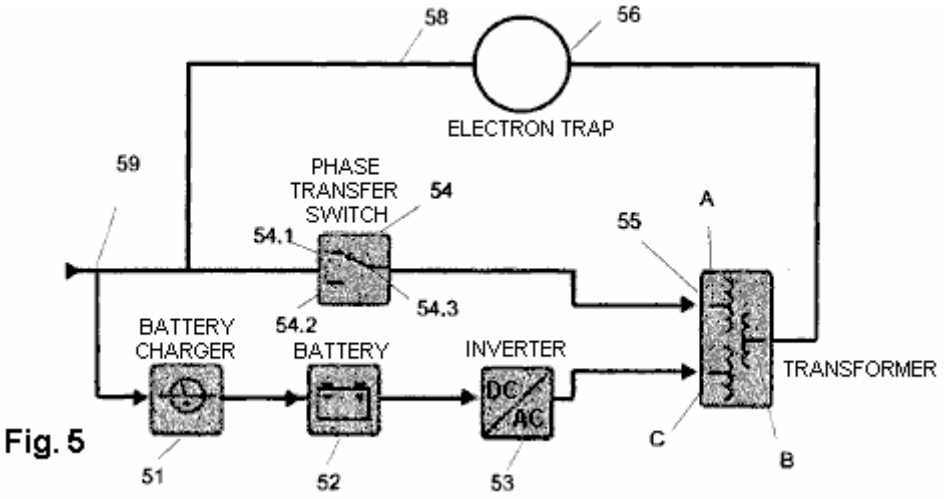

Fig. 5

Fig.5 shows another embodiment of the system for self-powered electric power generation equipment comprising a circuit which includes a typical uninterruptible power supply comprising a battery charger (AC/DC converter) **51** connected to a DC/AC inverter **53** and attached to them, a battery bank **52**. This basic circuit together with other devices are connected to a space free-electron capture device **56** (as defined in Brazilian patent application No. BR1020120008378 of 13/1/12) or, alternatively, an earthed free-electron collector **56** (as defined in Brazilian patent application No. BR1020120008386 of 13/1/12). This then comprises a battery charger **51** which is connected in series with a battery bank **52**, which is connected in series with the inverter **53**, which is connected in series with the transformer **55** at its point **C**, which is in series with its point **B** which is in series with the electron collector **56**, which is in series with the battery charger **51** which is connected to the load exit point **58**, which is also the circuit entry point **59**, which is in series with the phase transfer switch **54** section **54.1**, which is connected to terminal **54.3**, which is in series with point **A** of the transformer **55** which exits at point **B**. Points **A** and **54.3** as well as the parallel points **54.1** and **54.2**, are all parallel to the battery charger **51**, the battery bank **52**, the inverter **53** and to point **C** of the transformer **55**.

An alternative construction for use in emergency situations, in which the system ceases to be self-powered, the system may include an external power input point **59**, allowing phase transfer switch **54** to provide power output **58**, to feed external loads. Battery bank **52** provides power to the inverter **53**, which converts the direct current into alternating current, feeding point **C** of the transformer, which comes out at points **B** and **A** of the transformer **55**. Point **B** of the transformer feeds the electron-trap **56** producing alternating current which feeds the battery charger **51**, recharging the battery bank **52**.

The battery charger **51** is connected in parallel with the transfer switch **54** via connection points **54.1** and **54.3**, feeding point **A** of the transformer, which comes out at point **B**. Point **A** of the transformer and the switch transfer points **54.3** and **54.1** are in parallel to the battery charger **51**, the battery **52**, the inverter **53** and point **C** of the transformer **55**.

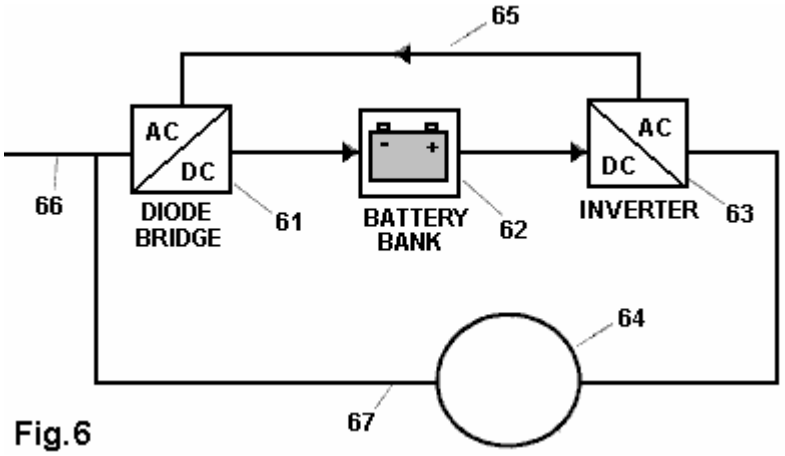

Fig.6

Fig.6 shows another embodiment where a rectifier **61** is connected to an inverter **63** and a battery bank **62**, and to a space free-electron trap **64** or alternatively, an earth electron trap **64** comprising thus, a delta (AC/DC) converter **61**, which is connected in series to a battery bank **62**, which is connected in series with the (DC/AC)

inverter **63**, which is in series with the electron collector **64** which is connected in series with the delta converter (AC/DC) **61** whose AC part is in series with the alternating AC current inverter **63** via a connecting wire **65** which is in parallel with the DC part of the delta converter **61** with the battery bank **62** and the DC part of inverter **63**. An alternative construction for use in emergency situations, in which the system ceases to be self-powered, the system may comprise a power input from an external power source, via the interconnection point **66** connected to the delta converter **61**, the output **67** supplying power, to the external loads.

Battery bank **62** provides power to the inverter **63**, which converts the direct current into alternating current, powering the free-electron collector **64**. The captured electrons from collector **64** form an alternating current which feeds the delta converter **61** via an output power load wire **67**.

The alternating part of the three-phase delta converter **61** is fed with alternating current from inverter **63** via connecting wire **65**, which is connected in parallel to the continuous DC delta converter **61**, which feeds the battery bank **62** and with the continuous portion the inverter **63**, closing the cycle of self-feeding and supplying power at the output **67**, which is the output power point.

Having described examples of preferred embodiments, it should be understood that the scope of the present invention encompasses other possible forms of construction, using the electron collectors connected to a basic circuit of a typical uninterruptible power supply of energy, known as a UPS, comprising a rectifier device (an AC/DC converter) **10**, connected to one inverter (DC/AC converter) **12**, and attached between them, an energy storage device (typically, a battery bank).

A very important part of the above patent is the device described as a “collector of free-electrons”, either from the earth or from space. We have to go to the patent applications mentioned above to find the details of these designs:

Application Number: BR2013/000015, Publication Date: 07/18/2013, Filing Date: 01/11/2013

Assignee: EVOLUÇÖES ENERGIA LTDA (Rua Santa Tereza 1427-B Centro - Imperatriz, MA- CEP -470 - Maranhäo, 65900, BR)

ELECTROMAGNETIC ELECTRON TRAP FOR ELECTRIC POWER GENERATION

Technical Field

The present invention refers to electromagnetic equipment for electric power generation or alternatively for thermal power generation. More specifically equipment capable of producing abundant electricity and thermal energy from a tiny amount of input electrical energy

Description of the Related Art

According to Lenz's law, any induced current has a direction such that the magnetic field it generates opposes the change in magnetic flux which produced it. Mathematically, Lenz's Law is expressed by the negative sign (-) that appears in the formula of Faraday's Law, as follows.

The magnitude of the induced emf (ε) in a conducting loop is equal to the rate of change of magnetic flux (Φ_B) with time:

$$\varepsilon = -\frac{d\Phi_B}{dt} \qquad \text{Equation 1}$$

As an example of application of Faraday's Law, we can calculate the electromotive force induced in a rectangular loop that moves in or out, with constant speed, a region of uniform magnetic field. The magnetic field flux through the surface limited by the loop is given by:

$$\phi = xLB \qquad \text{Equation 2}$$

and its variation in time:

$$\frac{\Delta\phi}{\Delta t} = \left(\frac{\Delta x}{\Delta t}\right)LB = vLB \qquad \text{Equation 3}$$

So:

$$\varepsilon = vLB \qquad \text{Equation 4}$$

and if the coil has a resistance (R) and the induced current:

$$i = \frac{\varepsilon}{R} = \frac{vLB}{R} \qquad \text{Equation 5}$$

A conductor traversed by an electric current immersed in a magnetic field undergoes the action of a force given by:

$$F = IL \times B \qquad \text{Equation 6}$$

Thus, the effect of the current induced in the loop appears as forces Ff, and F - FM. The first two cancel each other out and the third is cancelled by an external force P_{EXT} needed to maintain the constant speed loop.

As the force FM must oppose the force F_{EXT}, current (i) induced in the loop by varying the magnetic flux must have the meaning indicated in **Fig.3**. This fact is a particular example of Lenz's Law.

Considering the experimental activities discussed with Faraday's law, when a magnet approaches a coil, the induced current in the coil has a direction as shown in **Fig.1**. This generates a magnetic field whose north pole is facing the north pole of the magnet, that is, the field generated by the induced current opposes the motion of the magnet.

When the magnet is moved away from the coil, the current induced in the coil has a direction opposite to that shown in **Fig.1**, thereby generating a magnetic field whose south pole is facing the north pole of the magnet. The two poles attract each other, that is, the field generated by the induced current opposes the movement of the

magnet away from the coil. This behaviour is present in all current power generators, and known as ‘engine brake’ is highly undesirable as it increases the resistance and so, the energy loss.

When two electromagnetic coils are placed facing each other, as shown in **Fig.2**, there is no current in either of them. At the instant of power-up of one of the coils, the current in the coil, generates an induced current in the second coil. When powered up, the current in the coil goes from zero to its maximum value, and then remains constant.

Thus, when the current is changing, the magnetic field generated by it, (whose north pole faces the second coil) is also changing and so the magnetic flux of this field through the second coil is also changing. Then there is a current induced in the second coil whose sense is such that the magnetic field it generates tends to decrease the flow mentioned above, that is, its north pole confronts the north pole of the first field coil.

When the power switch is opened, the current in the first coil drops from its maximum value to zero, and correspondingly its magnetic field decreases. The flux of the magnetic field in the second coil also decreases, and the induced current now flows in the opposite direction. This current flow direction produces an enhancing magnetic field, that is, it has a south pole facing the north pole of the field of the first coil.

Thus, there is a realisation of the principle of conservation of energy, expressed by Lenz's law, wherein any induced current has an effect which opposes the cause that produced it. Assuming that the induced current acts to favour the variation of the magnetic flux that produced the magnetic field of the coil, it would have a south pole facing the north pole of the approaching magnet, causing the magnet to be attracted towards the coil.

If the magnet were then released, it would experience an acceleration toward the coil, increasing the intensity of the induced current and thus create an enhanced magnetic field. This field, in turn, would attract the magnet with increasing force, and so on, with a continuing increase in the kinetic energy of the magnet.

If energy were to be withdrawn from the magnet-coil system at the same rate at which the kinetic energy of the magnet increases, then there would be an endless supply of energy. So it would be a perpetually operating motor, which would violate the principle of conservation of energy. Therefore, it can be concluded that current generators feature a large energy loss during the generation of electricity.

Objectives of the Invention

An objective of the present invention is to contribute to the generation of sustainable energy, proposing an electromagnetic machine capable of producing abundant electricity from an extremely low input of electrical energy.

The above objective and other objectives are achieved by the present invention by a device comprised of at least one electromagnetic field-generating device (without a core or with at least one core) powered by an electrical power source (without a core or with at least one core) having their coils, or sets of coils, wound on at least one common conductive member in a closed circuit which itself has a polarised voltage which is connected to at least one conductive interconnection element which is connected to a grounding grid, these interconnections creating a new technical effect, namely, the appearance of an electric current which keeps circulating in a closed conductive loop, and which can therefore be used to power external loads.

The device which is the object of the present invention operates as follows: the electromagnetic field generating device, powered by a power source, produces an electromagnetic field which induces an electric current in a closed conductive circuit, creating an interaction between the magnetic poles of the equipment and the magnetic poles of the earth - through both electromagnetic attraction and repulsion. An endless supply of electrons is drawn from the earth into the conductive closed loop, which is connected to the ground through a conductive interconnected grid. Attracted electrons add to the current already flowing in the conductive closed loop, making power available for driving high-power loads, although the device itself is only supplied with a small amount of power. Thus, advantageously, the device which is the object of the present invention, acts as a trap for electrons from the earth and this allows the generation of electricity.

Advantageously, the present electromagnetic equipment generates either electricity or thermal energy, providing access to this new source of energy is through an electromagnetic field. The interconnections of the components of the electron-trap of the present invention, cause an advantageous new technical effect, namely, the appearance of an electric current which keeps circling in the conductive closed circuit, with or without voltage being applied and even without a load being connected to the loop - provided that the electron-trap is connected.

The proposed sensor can also be used to generate thermal power, depending on the form in which you want to use the effect of the flow of electrical current produced in this electromagnetic equipment.

For the generation of thermal energy in amounts proportional to the power of the electron-trap, through the movement of electrons in the conductive closed loop itself, the resistance should be increased by increasing the number of turns around the cores in the conductive element of the closed circuit, and in that instance, the coils of the electromagnetic field generating device, will then be made of heat-insulated electrical circuit components, bearing in mind the required temperature which is to be produced. The thermal energy generated by the electron-trap can be used in any application from domestic to industrial applications.

This technology can also be used for various technical purposes in electric machines. By "electrical machines", it should be understood to include: static electrical machines, transformers, ballasts, rotating electrical machines, synchronous machines, dual power supply machines, current rectifiers in synchronous cascade, external pole machines, synchronous current machines alternating current machines and/or direct current machines, electronic equipment and electrical resistances. The capture of electrons can provide single-phase, two-phase or three-phase supplies, operating at low, medium or high voltage.

The capture of electrons by induction, does not impact on the environment. The fact is that we use as the capturing force, only a negligible amount of electricity relative to the current captured by the sensor. The relationship between power input and the quantity of electricity generated by the electron-trap is at least 1 to 100, that is, for each 1 watt provided to the sensor, there is at least 100 watts of power available for external loads. This relationship, however, is not limited, as it depends on the mounting of the electron-trap and the objectives of the circuit, and so, the generated power can be greater than 100 times the input power.

Another advantage of the earthed electron- trap proposed in the present invention is that the electron-trap can transport electrons from point "A" to point "B" without a voltage drop across the closed-loop conductive element - if it is biased with a voltage - regardless of the distance between the points depending on the strength and quantity of the electromagnetic field generating devices. It is also possible to transport electrons when the conductive element in a closed circuit is itself not polarised. Thus, the electric current is transported without voltage, just by the magnetic field formed between the device and the generator of the electromagnetic field.

Brief description of the Drawings

The present invention will now be described with the aid of drawings, but the design is not limited to the implementations shown in these drawings, although they show other details and advantages of the present invention.

The figures show:

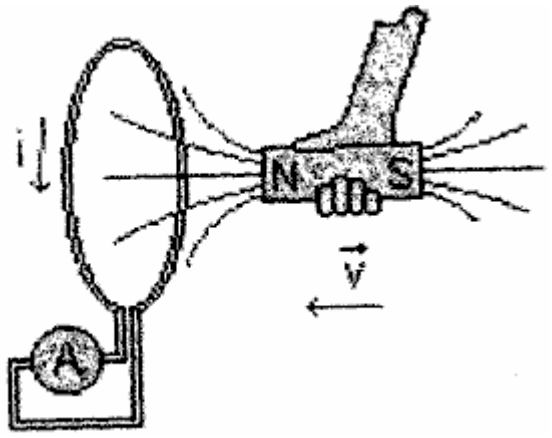

Fig.1

Fig.1 - illustrates Faraday's law.

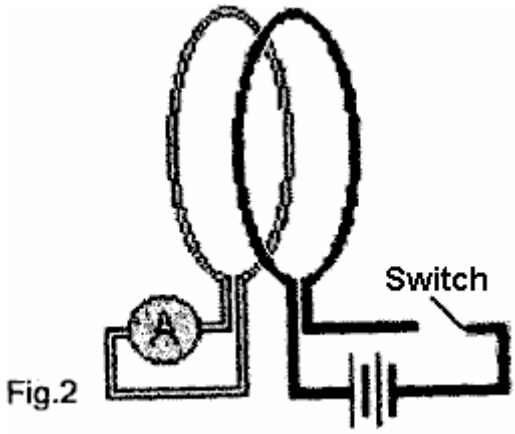

Fig.2 – is a representation of Faraday's law.

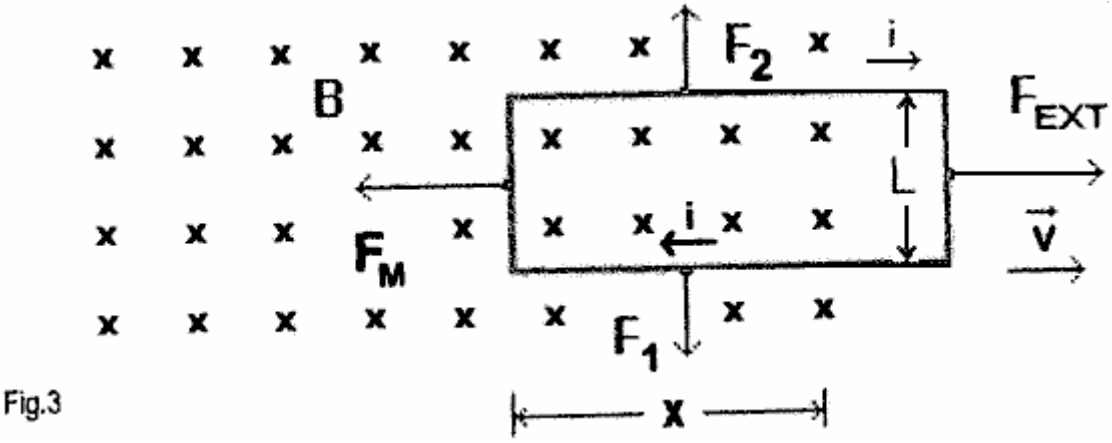

Fig. 3 – is a representation of Faraday's law.

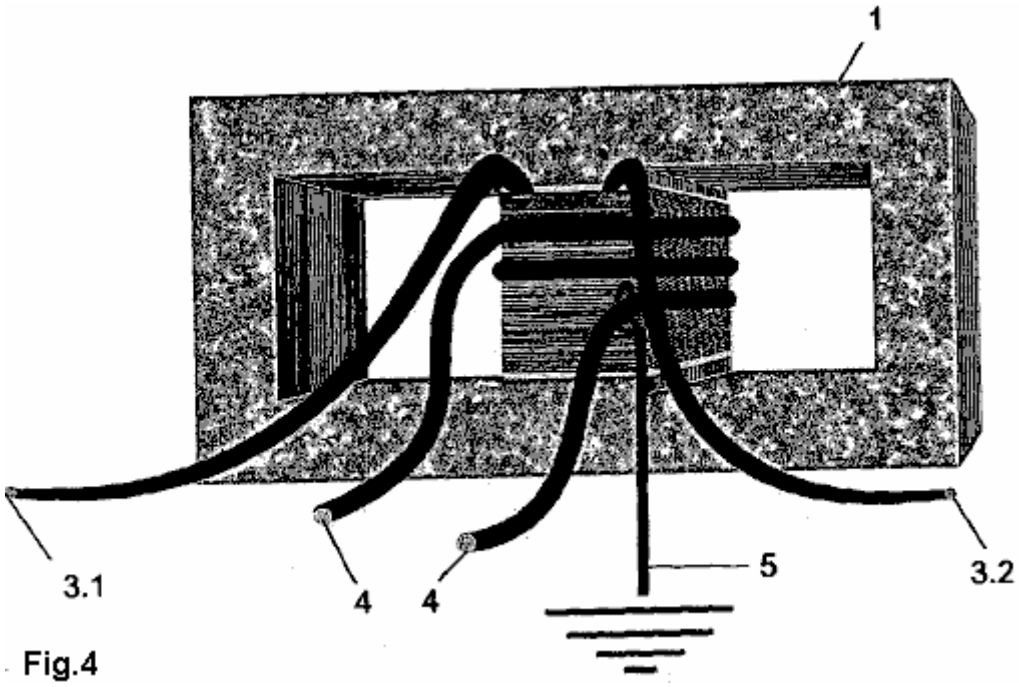

Fig. 4 - is a perspective view of an electron-trap with a single phase coil.

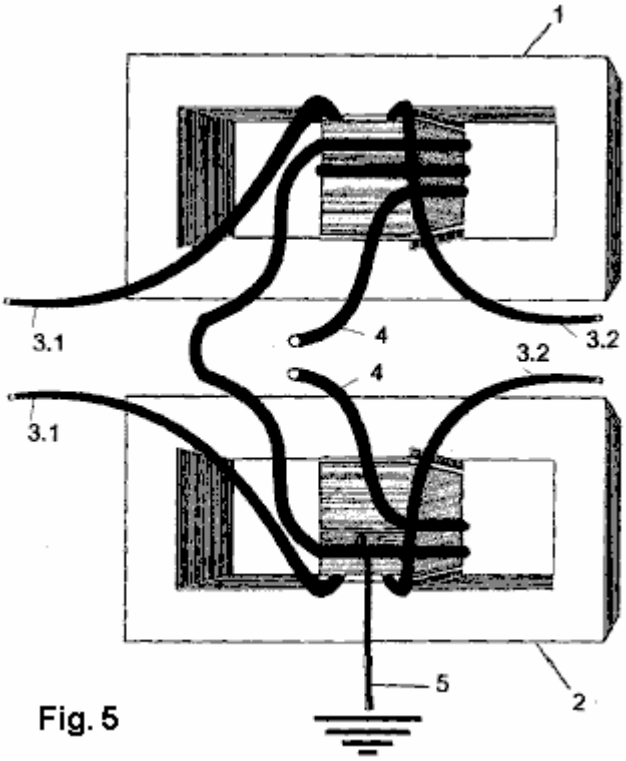

Fig. 5

Fig.5 – is a perspective view of a single-phase electron trap with two coils.

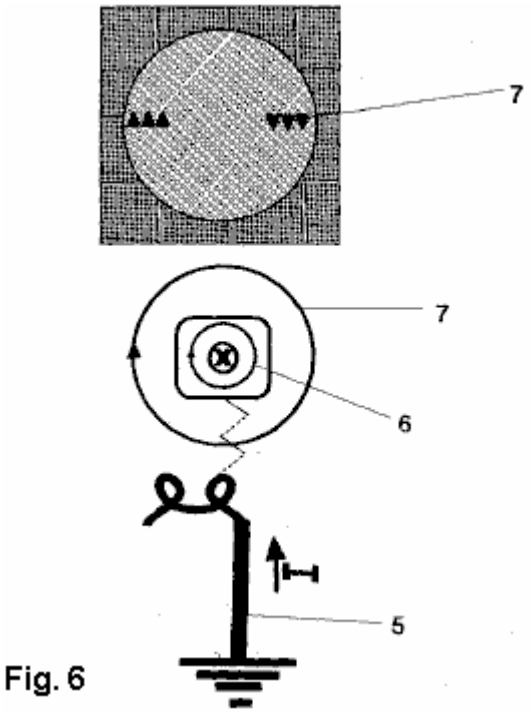

Fig. 6

Fig.6 - is a representation of the effect of electromagnetic flux in the coils around the cores of the electron trap.

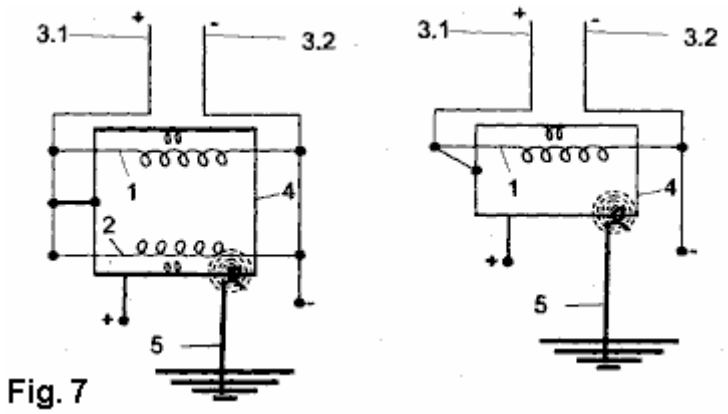

Fig.7 - is a representation of an electrical circuit with two coils of the link/coil conductor polarised.

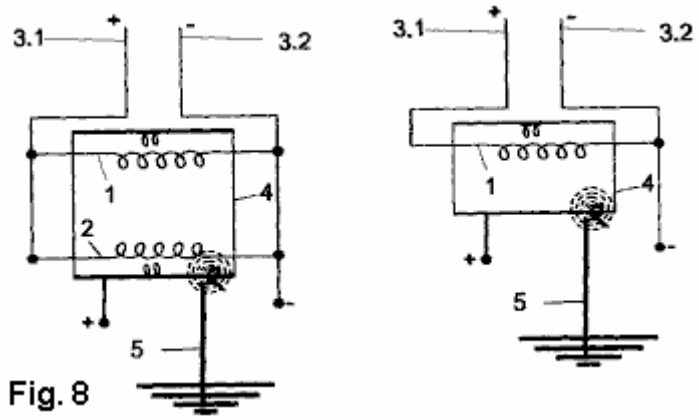

Fig.8 - is a representation of an electrical circuit with two coils of the link/coil conductor not polarised.

Detailed Description of the Drawings

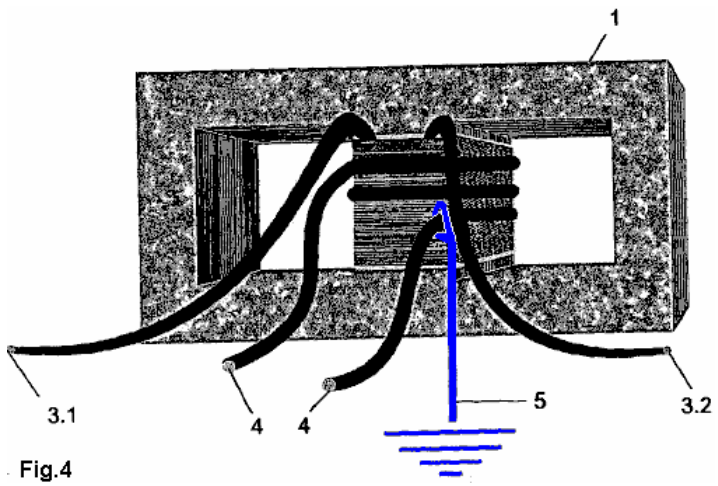

Fig.4 shows one of several types of electron-trap proposed by the present invention, where the electron-trap is single-phase and consists of at least one electromagnetic field-generating device with at least one set of coils, in this case it happens to be an electromagnetic type coil with one common magnetic core, but it could alternatively have any number of windings of any kind and shape. However, the electron-trap proposed by the present invention can be constructed with a different type of electromagnetic field generating device, such as an electromagnetic inductor or magnet of any type or shape, or any combination of them, and in unlimited numbers for each phase of the electron trap.

When winding these coils, for example, coil **4-4**, each coil must have at least one complete turn, preferably two turns if the objective is to generate electricity, and preferably four turns if the objective is provide thermal energy. The number of turns in the coils wound around the common core, is directly related to the amount of current to be generated.

At least one conductive interconnection element, in this case the driving member **5** - which can be copper or any other suitable conductive, material whether insulated or not insulated, connects or loop-links wire **4** to the ground grid. The connection between the conductor **5** and wire **4** is by electromagnetic induction. Winding **4** is also the power supply for the loads which are to be powered by the captured electrons.

Also in **Fig.4**, the power wires **3.1** and **3.2** (live phase and neutral) have an input from an external power coil **1** which can be energised from any external source of electricity such as a power grid. The trapped electrons can be configured to supply DC or AC current. Thus, if the coil **1** power source is alternating electrical current - AC, then the electron-trap provides alternating electrical current. If the power source is continuous electrical current - DC, then the electron-trap provides continuous electrical current - DC. The electrical supply provided by the trapped electrons can be single-phase, two-phase or three-phase, and at low, medium or high voltage.

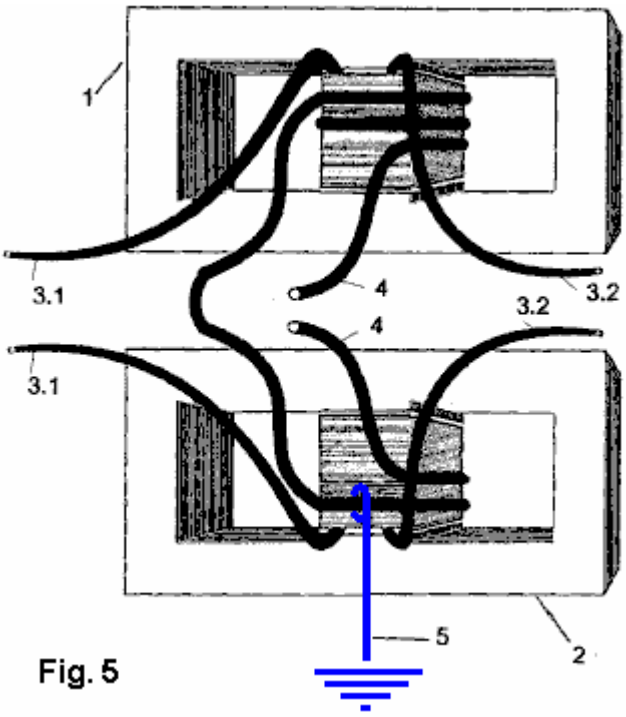

Fig. 5

Fig.5 shows an electron-trap with two single-core phase coils: **1** and **2**, although these coils may be of any type and shape. However, the electron-trap proposed by the present invention can be constructed with other types of electromagnetic field generating device, with at least one electromagnetic inductor or electromagnet which can be of any type and shape, with any combination of them, and in unlimited quantities in each phase of the electron-trap.

The coils on frames **1** and **2** may have other shapes, but they must each have at least one complete turn, particularly in coil **4**. The number of turns in this winding are directly related to the amount of current to be generated. This coil also makes the interconnection between the coils **1** and **2** forming the link between their two cores.

At least one conductive interconnection element, in this case the driving member **5** - which can be copper or any other suitable conductive, material whether insulated or not insulated, connects or loop-links wire **4** to the ground grid. The connection between the conductor **5** and wire **4** is by electromagnetic induction.

In electron-traps which have numerous sets of coils **1** and **2**, the ends of all of the power-supply conductors **3.1** can all be connected to each other, and all of the **3.2** conductor ends may be connected together. Thus, all of the coils **1** and **2** can be fed exactly the same voltage. The power to energise coils **1** and **2** can be provided from any external source of supply of electricity such as a power grid.

In electron-traps which have numerous coils **1** and **2**, a single coil winding **4** connects the cores of all of the coils **1** and **2**.

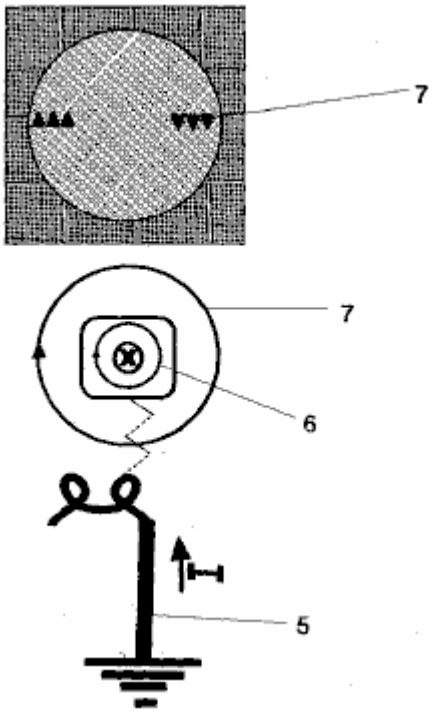

Fig. 6

The diagram shown in **Fig.6**, illustrates the magnetic induction **6** around the core "**X**" of the coil **1**. This induction causes electrical current flow in the conductor coil link **7/4**, attracting electrons from the earth, through the conductive member **5**, to the magnetic field of the electron-trap, where those electrons are added to the current generated by induction in the link coil **4** conductor loop circulating between north and south magnetic poles.

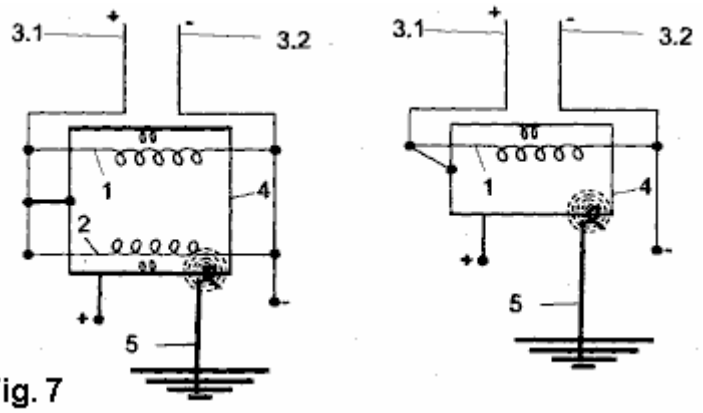

Fig. 7

Fig.7 shows how the connections should be made in one version of the electrical circuit of the electron-trap proposed in this invention. The diagram shows the electrical circuit of an electron-trap where the link/coil driver **4** is polarised with a voltage. This is one form of construction for an electron-trap which has two coils **1** and **2**, where a link/coil loop conductor **4** is biased with a voltage, that is, there is a link connecting the coil conductors **4** of a power supply **3.1** or **3.2**, whatever the stage.

In this way, earth electron-traps, by adopting this circuit, that is, with the link/conductor loop **4** and polarised voltage on coils **1** and **2**, besides being used as a power source for external loads, can also be used for thermal power generation.

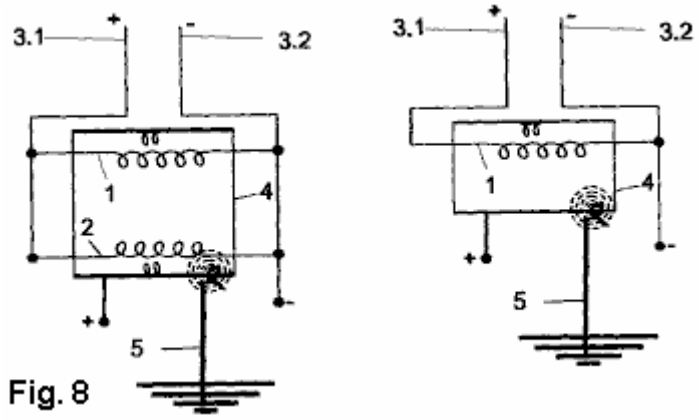

Fig. 8

Fig.8 shows how connections should be made in another electric circuit electron-trap proposed in this invention. the circuit illustrates a circuit of an electron-trap with a non-polarised link / coil driver **4**. This is one form of construction of the electron-trap where a link / coil conductor **4** of the spiral conductor coils **1** and **2** is not polarised, that is, there is no such link connecting conductor / conductor coil conductors **4** of a coil **3.1** or **3.2**.

Thus, earth electron-traps adopting this circuit, that is, with the link coil not polarised, the current flows without there being voltage in the link/coil conductor **4** joining the first and second coils by electromagnetic induction. They can also be used for generating thermal energy.

The structure of the circuit - in the open or closed coils **1** and **2**, and always in the closed link / loop lead **4** - makes it possible to generate current by induction and electron capture by electromagnetism on the link conductor **4** - where current is generated and stays in motion with or without voltage, as the coils **1** and **2** are being fed. Thus, the present invention provides a new concept for electrical energy generation, since it is obtained from an electric current circling without consumption and even without an output load being attached to it.

Additionally, because the induced electrical current flows regardless of the voltage present, it can be used as a current stabiliser for electrical networks whether they be single-phase, two-phase or three-phase, with low, medium or high voltage.

ELECTROMAGNETIC DEVICE FOR CAPTURING FREE SPACE ELECTRONS TO GENERATE ELECTRICITY

Application Number: BR2013/000014

Publication Date: 07/18/2013

Filing Date: 01/11/2013

Assignee: EVOLUÇÕES ENERGIA LTDA (Rua Santa Tereza 1427-B Centro - Imperatriz -, MA - CEP -470 - Maranhão, 65900, BR)

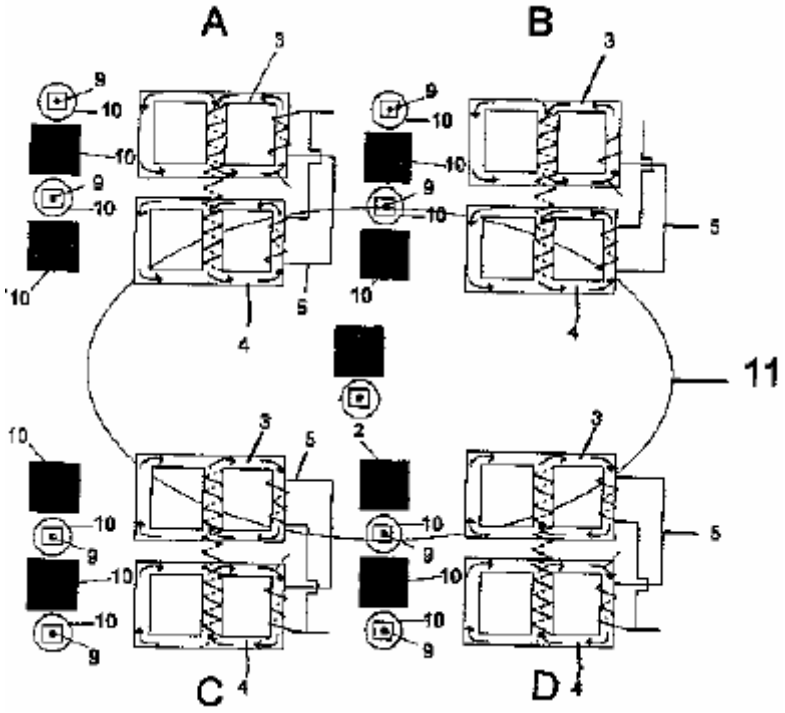

Abstract:

The invention relates to a device that comprises at least three sets (**A, B, C, D**) of at least one device for generating an electromagnetic field (**3**) and (**4**), powered by an electricity source (without a core or with at least one core) the cores thereof or any extension thereof, preferably the windings or sets of windings thereof, being surrounded by at least a single conductive element forming a polarised and energised closed-circuit (**5**), the sets of electromagnetic-field generating devices (**3**) and (**4**) being linked together by their opposing poles to encourage the interaction of their electromagnetic fields, which ideally, are located between two hollow metal hemispheres (**1**) so as to concentrate and enhance the electromagnetic fields, these interconnections causing, as a novel technical effect, the emergence of an electrical current that circulates, with or without voltage, in the conductive element forming a closed-circuit (**5**) - even if no load is connected.

Description:

"ELECTROMAGNETIC EQUIPMENT FOR FREE ELECTRON-CAPTURE FROM SPACE, FOR ELECTRICITY GENERATION".

Technical Field

The present invention relates to electromagnetic equipment for electrical power generation and/or thermal power generation. More specifically, equipment capable of producing abundant electricity and thermal energy from a tiny input of electrical energy.

Description of the Related Art

According to Lenz's law, any induced current has a direction such that the magnetic field it generates opposes the change in magnetic flux that produced it. Mathematically, Lenz's Law is expressed by the negative sign (-) that appears in the formula of Faraday's Law, as follows.

The magnitude of the induced emf (ε) in a conducting loop is equal to the rate of change of magnetic flux (Φ_B) with time:

$$\varepsilon = -\frac{d\Phi_B}{dt} \qquad \text{Equation 1}$$

As an example of application of Faraday's Law, we can calculate the electromotive force induced in a rectangular loop that moves in or out, with constant speed, a region of uniform magnetic field. The magnetic field flux through the surface limited by the loop is given by:

$$\phi = xLB \qquad \text{Equation 2}$$

and its variation in time:

$$\frac{\Delta\phi}{\Delta t} = \left(\frac{\Delta x}{\Delta t}\right)LB = vLB \qquad \text{Equation 3}$$

So:

$$\varepsilon = vLB \qquad \text{Equation 4}$$

and if the coil has a resistance (R) and the induced current:

$$i = \frac{\varepsilon}{R} = \frac{vLB}{R} \qquad \text{Equation 5}$$

A conductor traversed by an electric current immersed in a magnetic field undergoes the action of a force given by:

$$F = IL \times B \qquad \text{Equation 6}$$

Thus, the effect of the current induced in the loop appears as forces Ff, and F - FM. The first two cancel each other out and the third is cancelled by an external force P_{EXT} needed to maintain the constant speed loop.

As the force FM must oppose the force F_{EXT}, current (i) induced in the loop by varying the magnetic flux flux must have the meaning indicated in **Fig.1**. This fact is a particular example of Lenz's Law.

Considering the experimental activities discussed with Faraday's law, when a magnet approaches a coil, the induced current in the coil has a direction as shown in **Fig.2**. This generates a magnetic field whose north pole is facing the north pole of the magnet, that is, the field generated by the induced current opposes the motion of the magnet.

When the magnet is moved away from the coil, the current induced in the coil has a direction opposite to that shown in **Fig.2**, thereby generating a magnetic field whose south pole is facing the north pole of the magnet. The two poles attract each other, that is, the field generated by the induced current opposes the movement of the magnet away from the coil. This behaviour is present in all current power generators, and known as ‘engine brake’ is highly undesirable as it increases the resistance and so, the energy loss.

When two electromagnetic coils are placed facing each other, there is no current in either of them. At the instant of power up one of the coils, the current in the coil, generates an induced current in the second coil. When powered up, the current in the coil goes from zero to its maximum value, and then remains constant.

Thus, when the current is changing, the magnetic field generated by it, (whose north pole faces the second coil) is also changing and so the magnetic flux of this field through the second coil is also changing. Then there is a current induced in the second coil whose sense is such that the magnetic field it generates tends to decrease the flow mentioned above, that is, its north pole confronts the north pole of the first field coil.

When the power switch is opened, the current in the first coil drops from its maximum value to zero, and correspondingly its magnetic field decreases. The flux of the magnetic field in the second coil also decreases,

and the induced current now flows in the opposite direction. This current flow direction produces an enhancing magnetic field, that is, it has a south pole facing the north pole of the field of the first coil.

Thus, there is a realisation of the principle of conservation of energy, expressed by Lenz's law, wherein any induced current has an effect which opposes the cause that produced it. Assuming that the induced current acts to favour the variation of the magnetic flux that produced the magnetic field of the coil, it would have a south pole facing the north pole of the approaching magnet, causing the magnet to be attracted towards the coil.

If the magnet were then released, it would experience an acceleration toward the coil, increasing the intensity of the induced current and thus create an enhanced magnetic field. This field, in turn, would attract the magnet with increasing force, and so on, with a continuing increase in the kinetic energy of the magnet.

If energy were to be withdrawn from the magnet-coil system at the same rate at which the kinetic energy of the magnet increases, then there would be an endless supply of energy. So it would be a perpetually operating motor, which would violate the principle of conservation of energy. Therefore, it can be concluded that current generators feature a large energy loss during the generation of electricity.

Objectives of the Invention

The present invention aims to contribute to the generation of sustainable energy, proposing electromagnetic equipment capable of producing abundant electricity from an extremely low input of electrical energy.

The above objective and other objectives are achieved in the present invention by a device comprising at least three sets of at least one electromagnetic field generating device (without a core or with at least one core) powered by an electrical power source, having their cores or any extension of them, with their coils or sets of coils, wound on at least one common conductive member in a closed circuit which is polarised by a voltage source, and these sets of electromagnetic field generating devices are arranged with their poles in confrontation, to promote the interaction of electromagnetic fields, and, preferably, positioned between two hollow metallic hemispheres, in order to focus and enhance their electromagnetic fields - these interactions cause a new technical effect - the emergence of an electric current which keeps flowing in a closed loop, with or without voltage being applied to that closed loop, current which is capable of powering external loads - even if no load is attached to it.

The device which is the object of the present invention operates as follows: Sets of electromagnetic field generating devices to be powered by an electrical power source, produce an electromagnetic field which induces an electric current in a closed conductive circuit, creating an interaction between the magnetic poles, and through repeated electromagnetic attraction and repulsion, provides an endless supply of electrons to the conductive closed loop itself.

The electrons attracted by this technique, augment the current flowing in the closed conductive loop, which provides the current to power external loads of high power, in spite of the fact that the device itself is supplied with only a small level of power. Thus, advantageously, the device which is disclosed in the present invention forms a trap for electrons from space, resulting in the generation of electricity. The interconnections of the components of the electron-trap cause, a new technical effect, namely, the appearance of an electric current which keeps circling in a closed circuit, even without any voltage being applied to the closed circuit, and even without a load being connected to it. The present electromagnetic equipment generates electricity or thermal energy, providing access to this new source of energy through the use of an electromagnetic field.

The proposed sensor can also be used for the generation of thermal energy depending on the form of circuit which is to be used, resulting from the flow of electric current produced by this electromagnetic equipment.

This field generates a flow of electric current induced by electromagnetic coils, which appears in the linking interconnecting devices generating electromagnetic fields with electromagnets, inductors or magnets. This chain operates in a manner favourable to the variation of the magnetic flux produced by the magnetic field in the electron-trap. Thus, it creates a north pole and a south pole, providing an endless supply of electric current without resistance between the links which interconnect the devices which are generating the electromagnetic fields. So, induced electric current is generated with or without voltage in the interconnection links of electromagnetic field-generating devices, depending on the connection method of the electrical circuit of the electron-trap.

The free-electrons collected by the space electron-trap can form alternating current (AC) or direct current (DC). The ratio of input power to output power is 1 to 100, that is, the generated power can be 100 times greater than the input power when there is at least one link / coil driver between the coils and the inductors or electromagnets. This relationship, however, is not limited to a factor of 100, as it depends on the shape of the electron-trap and its objective.

Another advantage of the free space electron-trap of the present invention is that, with thermal insulation of the components in the electric circuit, it is possible to produce thermal energy at low, medium or high temperature, through the movement of the electrons in the conductors, coils and/or electromagnets. The temperature generated is linked directly to the number of turns in the coils.

Thermal power generation performed by the sensor can be used for boiling and/or evaporation of liquids to be used in other types of energy generation, for example, replacing the use of coal and natural gas.

Another advantage of the proposed electron-trap of the present invention is that the electron-trap can transport electrons from one point "A" to a point "B", without a voltage drop in the link - if it is polarised - regardless of the distance between the points, depending on the strength and quantity of the electromagnetic field-generating devices. It is also possible to transport the electrons when the link devices generating the electromagnetic field are not polarised. In this way, the electric current is conveyed without voltage but only by the magnetic field formed between the coils. This methodology can be used in various fields.

Because of its simple construction, the electron-trap is a simple device which is compact, and performs low-cost power generation which can be used in all types of machinery, equipment and devices of all kinds, and many areas of application which require electricity in order to operate. The electron-trap can have single-phase, two-phase or three-phase output, and can generate electric current at low, medium or high voltage.

Brief description of the Drawings

The present invention will now be described with the aid of drawings, but the design is not limited to the implementations shown in these drawings, although they show other details and advantages of the present invention.

The figures show:

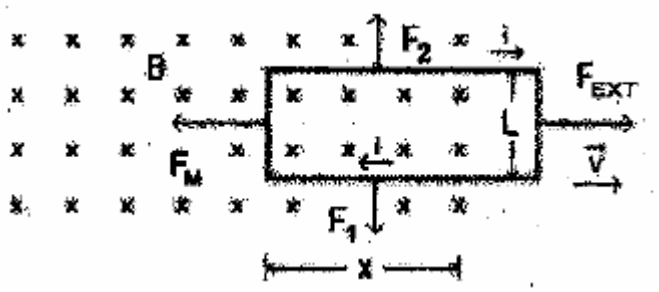

Fig.1 - illustrates Faraday's law.

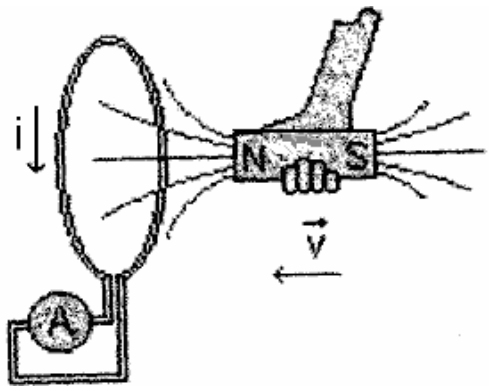

Fig.2 illustrates Faraday's law where a magnet approaches a coil of just one turn..

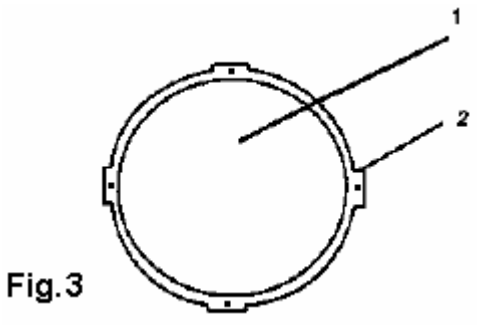

Fig.3

Fig.3 is a view of one metallic hemisphere seen from above.

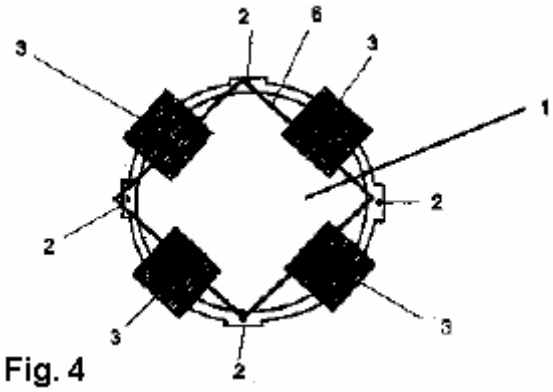

Fig. 4

Fig.4 is a bottom view of the hemisphere with the coils in place.

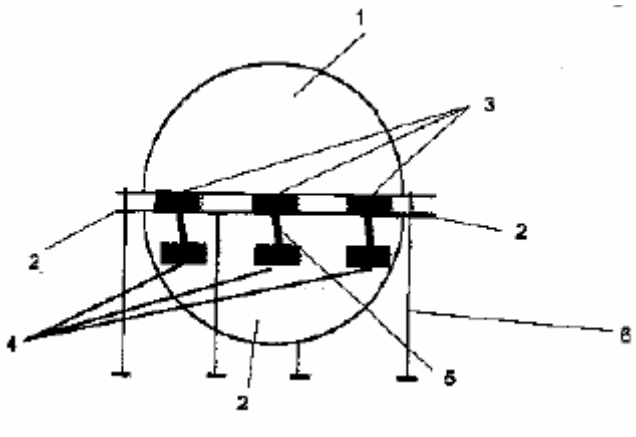

Fig.5 is a side view of the free-space electron-trap.

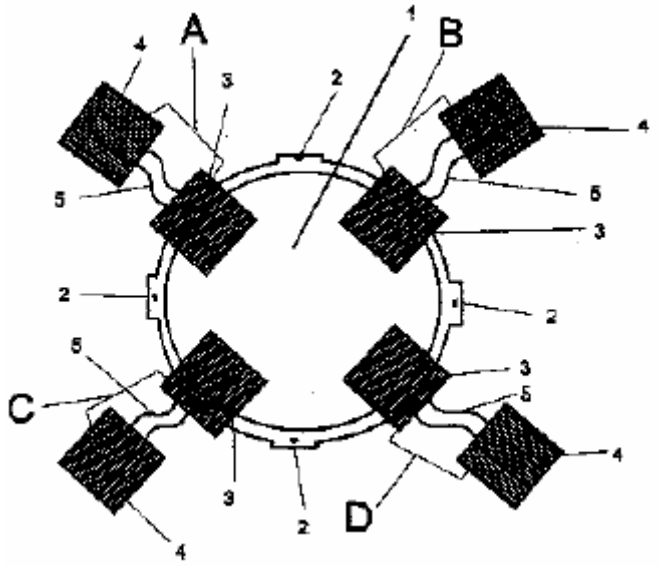

Fig.6 is an underside view of the space electron-trap, with its coils and electromagnets

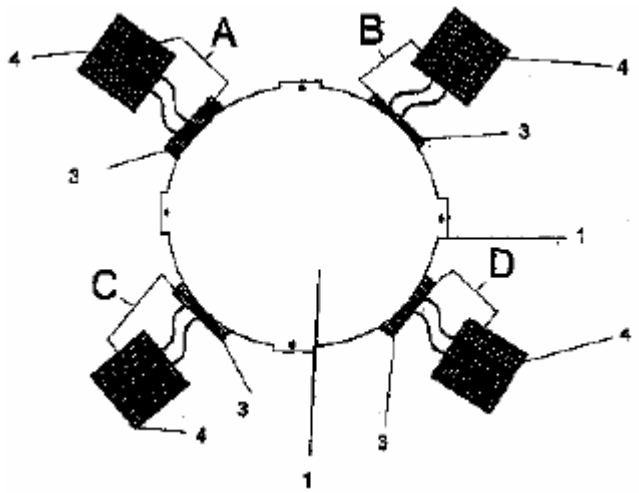

Fig.7 a view from above of the space electron-trap with its coils and electromagnets.

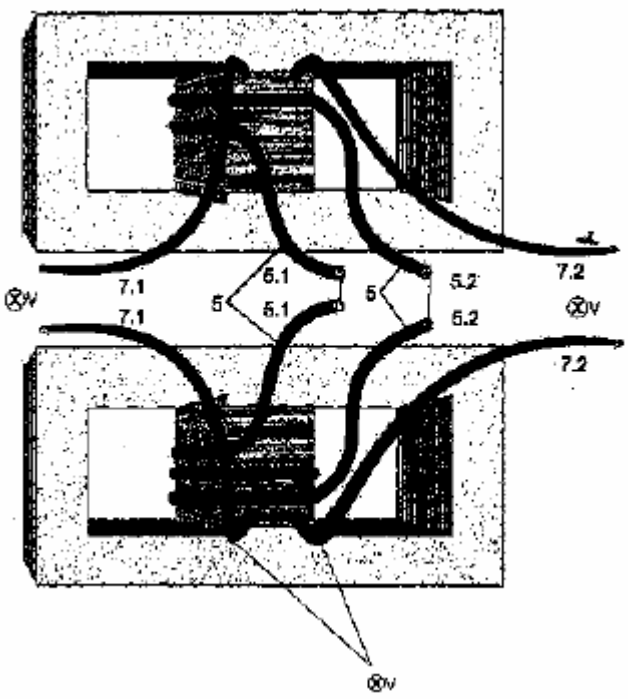

Fig.8 is a perspective view of an electron-trap with its coils.

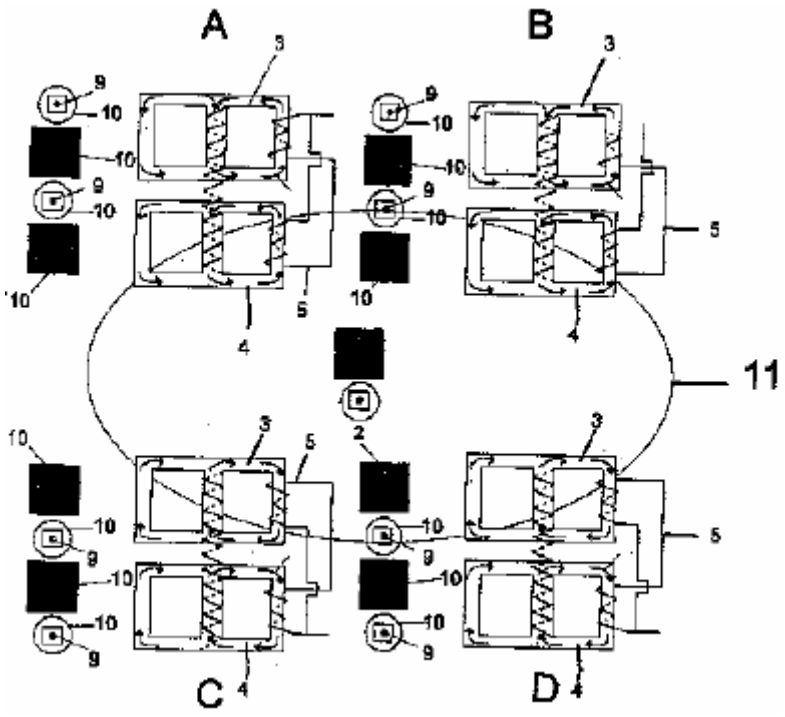

Fig.9 shows the circuit diagram of the device, indicating the effect of electromagnetic field.

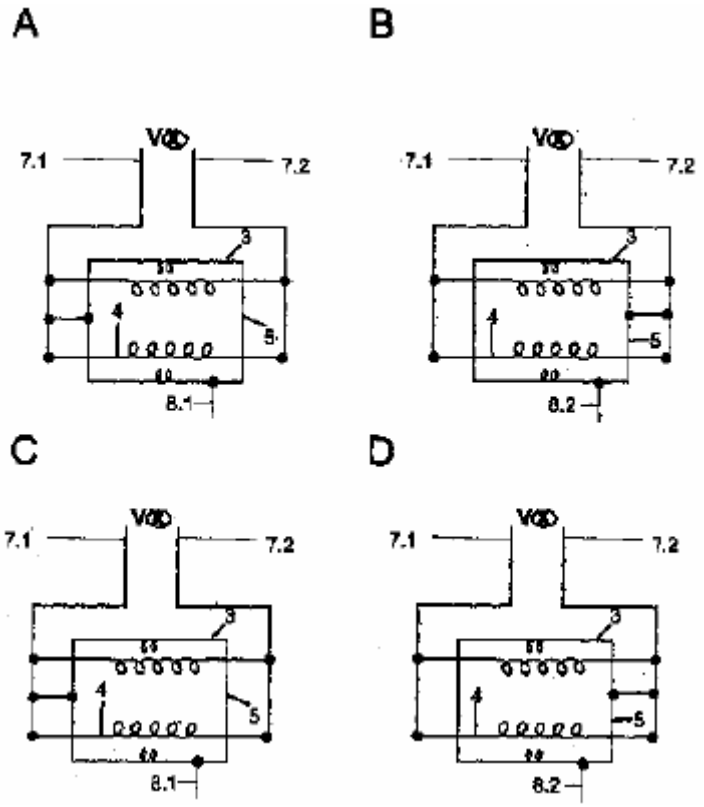

Fig.10 - shows the circuit diagram of the connection of the inductor coils in sets (**A, B, C** and **D**).

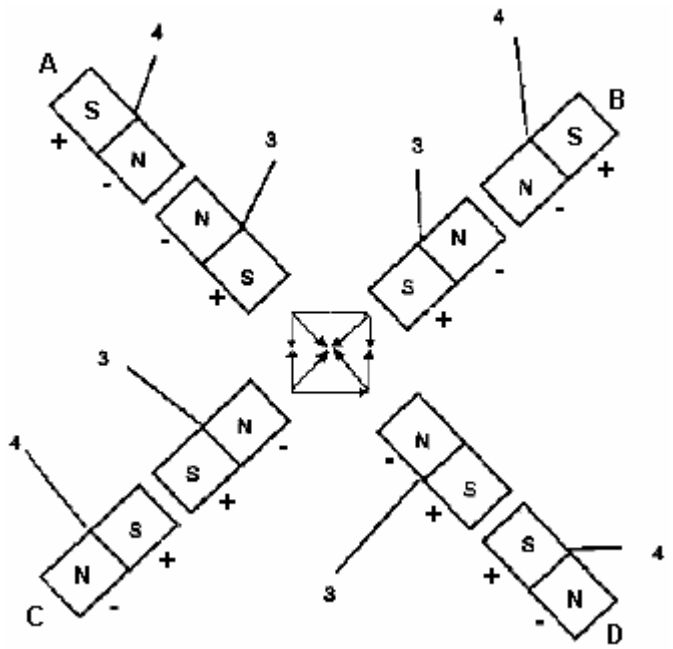

Fig.11 - is an electromagnetic diagram representation of north and south poles of the sets of coils (**A, B, C** and **D**).

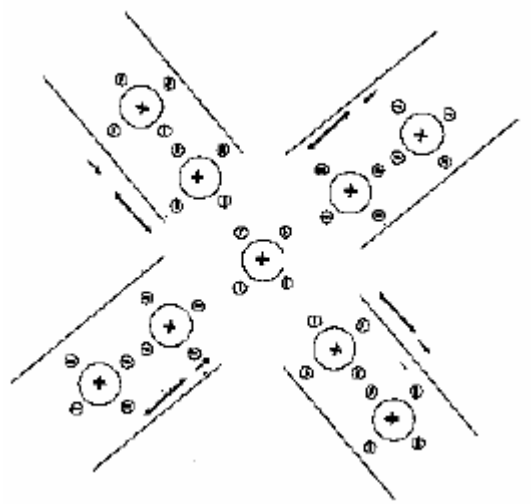

Fig.12 is a representation of the electrons being attracted and repelled by the device.

Detailed Description of the Drawings

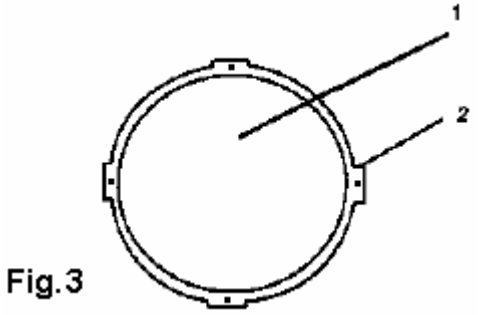

Fig.3

Fig.3 is a top view of one of the two hollow metallic hemispheres **1** which is part of the electron trap of free space proposed in this invention. Hemisphere **1** is preferably made from, but not limited to, aluminium, and it has mounting tabs **2**.

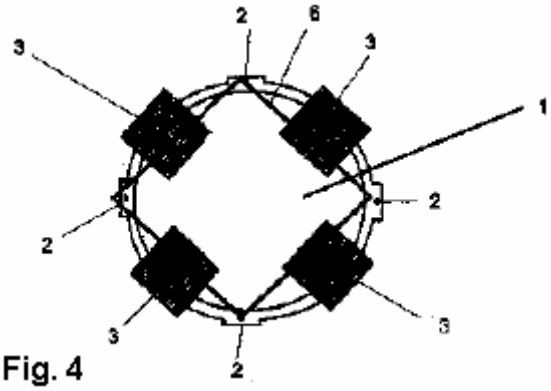

Fig. 4

Fig.4 is a bottom view of metallic hemisphere **1**. It has four electromagnetic field generating devices **3**, positioned around the hemisphere and fixed to support **6** which is attached to hemisphere **1** by mounting tabs **2**.

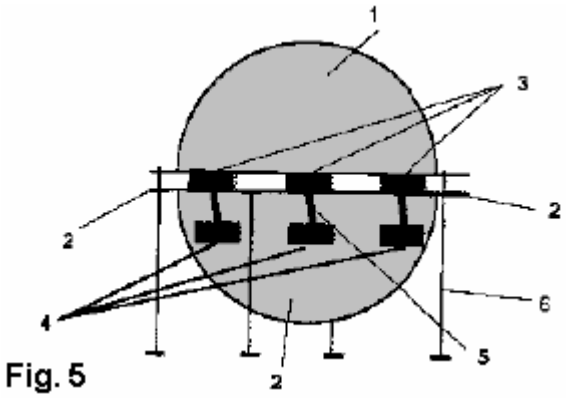

Fig. 5

Fig.5 is a side view of the free space electron-trap. It shows the two metallic hemispheres **1** and **2** (which form an imperfect sphere), and three of the coils **3** which are attached to the mounting tabs **2** and three inductors **4** which form the closed circuit itself, and which are attached by conductors **5**, and support member **6** on which are mounted coils **3** and their components.

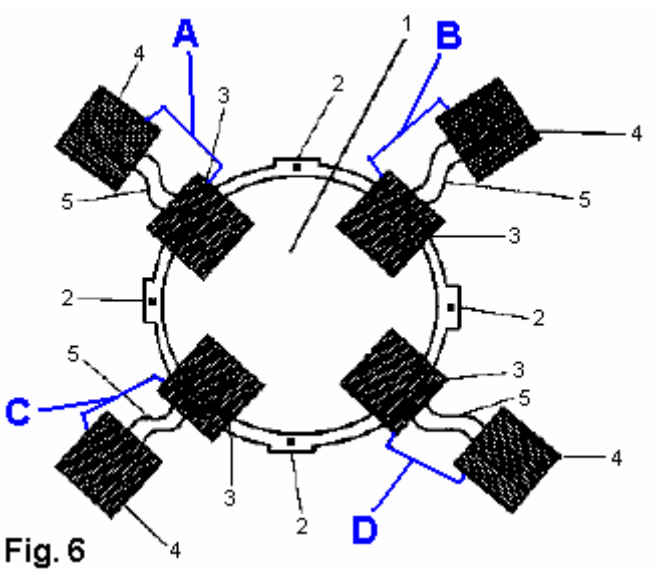

Fig. 6

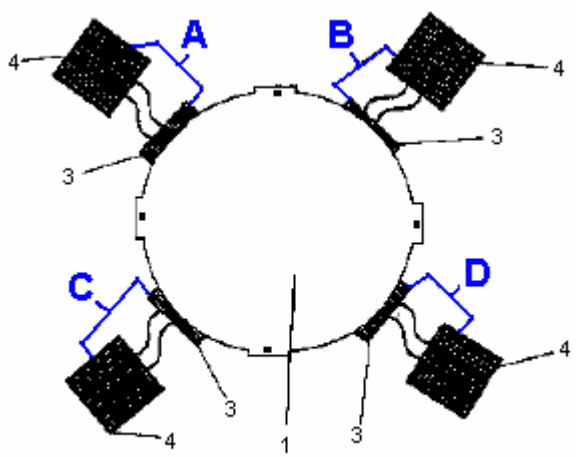

Fig. 7

Fig.6 and **Fig.7** show the top and bottom views of the metallic hemisphere **1** which accommodates four coils **3** attached to the holder **6** (not shown) which is secured to the hemisphere **1** by its mounting tabs **2**. **Fig.6** also shows the inductors or electromagnets **4** their corresponding coils **3** and their interconnecting conductors **5**. Each coil **3** and its linked inductor **4** forms a set. In **Figures 6** and **7** there are four such sets, marked **A, B, C** and **D**. The coils **3**, connected by their links **5**, each have at least one turn, and if the objective is to generate electricity, then preferably two turns, and if the objective is thermal energy, then four turns. The coils **3** may have various different shapes. The number of turns in the coil **3** are directly related to the amount of current to be generated, and the connecting links **5** may be either a single conductor or more than one conductor, the cross-sectional area of conductor **5** being selected to carry the current which is to be generated.

In sets **A, B, C** and **D**, the link conductors **5** have at least one turn around coils **3**. This winding is connected to the respective electromagnets **4** of each set (**A, B, C** and **D**) as shown in **Figures 6** and **7**. Please note that the inductors and electromagnets **4** can be any type of inductor, and other types of coil may be used.

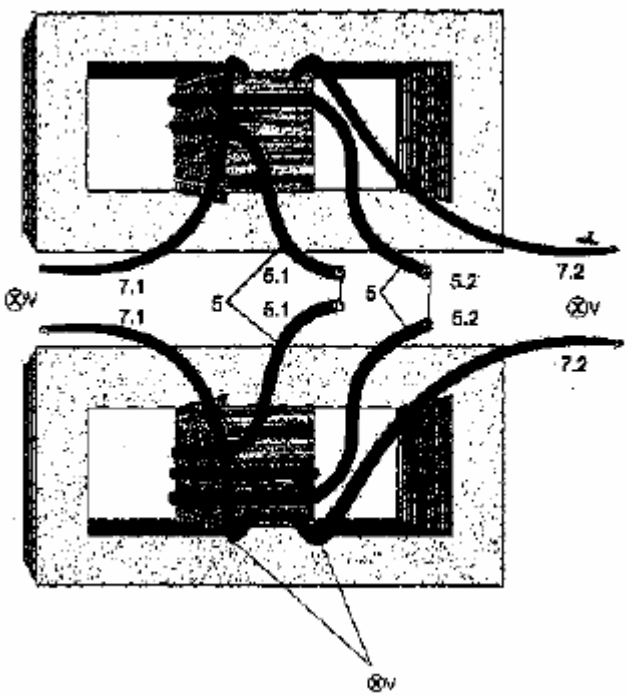

Fig.8 shows the inter-connecting coils **5** for each of the five sets **A, B, C** or **D** linking between coils **3** and **4** in each set. As shown in **Fig.6** and **Fig.7**, the link **5** makes the connection between coils **3** and **4**. This means that the wires marked **5.1** are all connected together, and the wires marked **5.2** are all connected together. Doing this, establishes the interconnection links **5** shown in the drawings. The power supply wires marked **7.1** are connected together as are the wires marked **7.2**. The wires marked **7.1** are connected to the live phase of the external power supply, while the other ends marked **7.2** are connected to the neutral of the external power supply.

In the space free-electron trap of the present invention, the coils **3** can be either single-phase, two-phase or three-phase. Also, the coils **3** may be powered by any voltage (V). The power coil **3** can be energised by any source of electrical energy such as a power grid. The electron-trap can be configured to produce alternating current or direct current. So, if the external power supply is alternating electrical current - AC, then the electron-trap provides an alternating electrical current output. If the power supply is DC, then the electron-trap provides an output of continuous electrical current - DC. The electron-trap can be configured for single-phase, two-phase or three-phase operation, with low, medium or high voltage outputs.

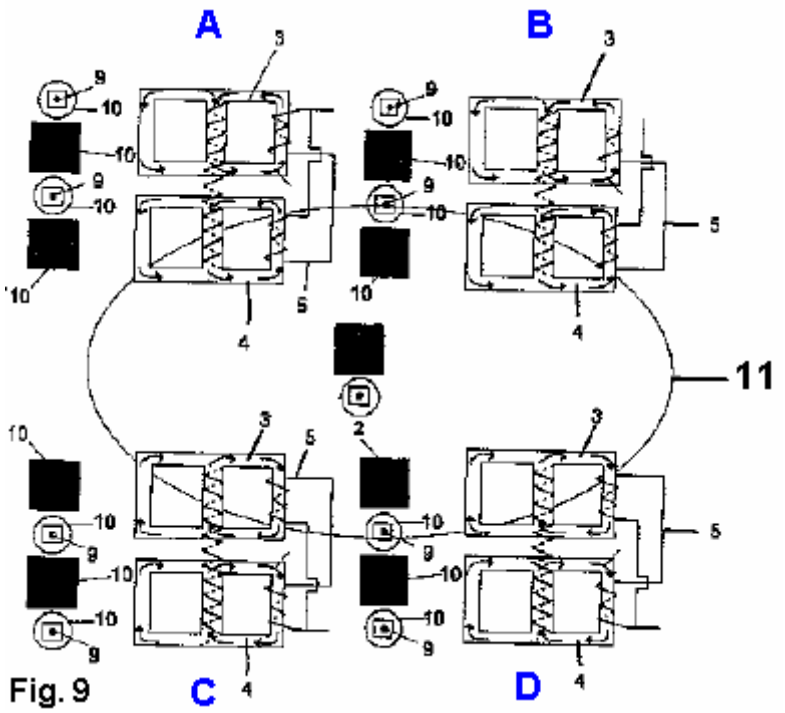

Fig. 9

Fig.9 shows an electron-trap circuit diagram with four sets **A, B, C** and **D** of inductor coils **3** and **4**. Induction is produced around core **9** of the three sets of coils **A, B, C** and **D**. The effect of the interaction of the

electromagnetic fields **11** is shown. The induction via core **9**, causes the circulation of electric current in the links **5**, attracting the free electrons through the electromagnetic field of the trap. Then, the electrons join with the current generated by induction on link **5**, circulating between the magnetic poles north-south and south-north.

By way of example, the coils **3** are shown wound on a single phase column type core, but these can also be of any kind or shape. The electron-trap proposed by the present invention can be constructed with another type of electromagnetic field generating device which has at least one electromagnetic coil or magnet or electromagnetic inductor which can be of any kind or shape, or any combination of those, and with any number in each phase of the electron-trap.

The electron capture occurs through an electromagnetic field which is formed with the connection of coils **3** with the electromagnets or inductors **4** through the links **5** between the eight components.

This closure produces the displacement of the electrons in the coil **3** set (**A**) (for simplicity, referred to as coil **3A**), these electrons are attracted by the protons of coil **3D**, and are repelled by the electrons of the electromagnetic field of the coil **3D** itself. These coil **3D** electrons are attracted by the protons of the coil **3B**, and are repelled by the electrons of the electromagnetic field of coil **3B**. These electrons of coil **3B** are attracted by the protons of coil **3C**, and are repelled by the electrons of the electromagnetic field of the coil **3C** itself. Similarly, the **3C** coil electrons are attracted by protons of the **3A** coil, and are repelled by the electrons of the electromagnetic field of the coil **3A** itself. These coil **3A** electrons are attracted by the protons of the **3D** coil, and are repelled by the electrons of the electromagnetic field of the **3D** coil itself. Analogously, the coil **3D** electrons are attracted by the protons of the coil **3B**, and are repelled by the electrons of the electromagnetic field of the coil **3B** itself. These **3B** coil electrons are attracted by the protons of coil **3C**, and are repelled by the electrons of the coil itself induced **3C**, and then the coil **3C** electrons are attracted by protons of coil **3A**, and are repelled by the electrons of the electromagnetic field of the coil **3A** itself. That cycle continues as the sets of coils **A, B, C** and **D** are being fed by a voltage. These endless attractions and repulsions generate an electric current in the link coil **5**.

In the electron-trap, the voltage is stable. Regardless of the amount of current generated-which can be very high, the voltage will be the same in the electric circuit of the sensor, because the current moves through the attraction and repulsion of the electrons, regardless of voltage.

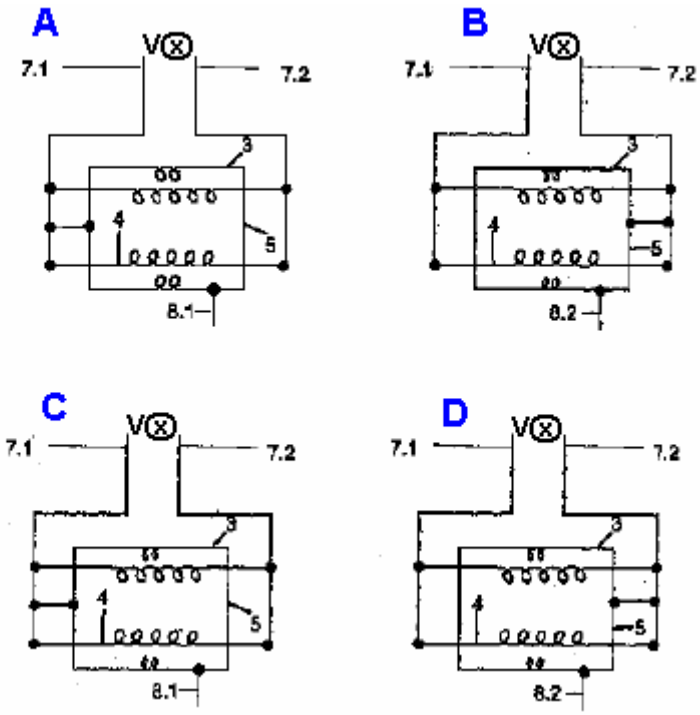

Fig. 10

Fig.10 illustrates a circuit diagram of the electrical connection between the coils **3** and **4** in sets **A, B, C** and **D**. It can be seen that the sets **A, B, C** and **D** are enclosed between the coils **3** and their associated inductors or electromagnets **4**. The supply conductors **7.1** and **7.2**, of sets **A, B, C** and **D** must be interconnected. When feeding power to the coils **3** and **4** the phase should be connected to **7.1** and the neutral to **7.2**.

The sets **A, B, C** and **D** after being fed with electric current, generate voltage through the attraction and repulsion of the electrons in the linking coil **5**, where there is at least one output load **8.1**, which should be connected joining sets **A** and **C**, and at least one load output **8.2**, which should be connected joining sets **B** and **D**. The output points **8.1** and **8.2** are the respective phases and neutral of power points **7.1** and **7.2**.

In this way, a singl-phase electron-trap is created by two pairs of sets of coils/inductors **3** and **4**.

The **3/4** electromagnet coil set can be replaced by a **3/3** coil set, without any disadvantage to the electron-trap.

Sets **A, B, C** and **D**, are inserted into a hollow metal hemisphere **1** preferably constructed from - but not limited to - aluminium. The hemisphere **1**, whose function is to concentrate and maximise their electromagnetic fields, simulating an electron cloud, has a fixed support **6** connected to attachment tabs **2**, and to which the coils **3** are fixed.

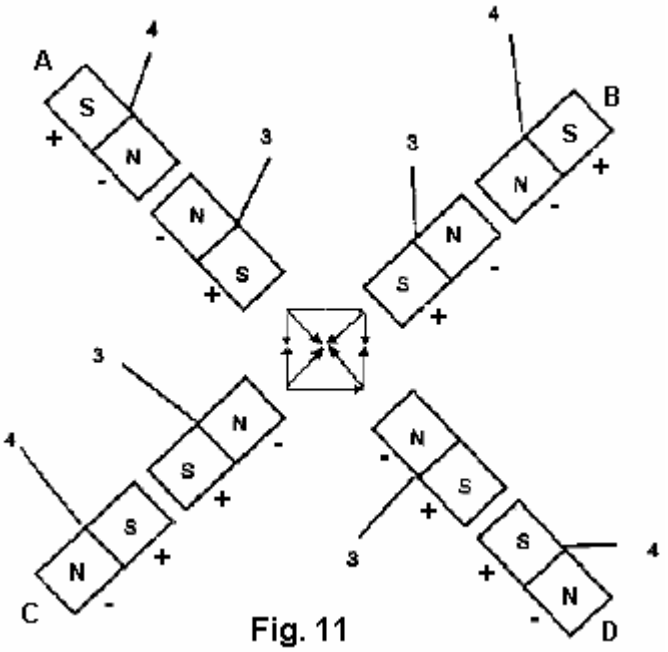

Fig. 11

Fig.11 is a diagram of the electromagnetic north and south poles of the inductor coils **3** and **4** of sets **A, B, C** and **D** of the electron-trap. The electromagnetic behaviour described for **Fig.9** is again demonstrated by the formation of the magnet assembly to the North Pole and South Pole being attracted and repelled by the lines of force of the magnet from the point "**A**" to point "**D**", point "**A**" to point "**B**", the point "**B**" to point "**C**", point "**C**" to point "**A**", and so on, as long as there is an electromagnetic field. The electromagnetic field of the space electron-trap provides that induced current in a direction similar to the variations of the magnetic flux that produced it. So, the magnetic field creates a north pole and a south pole in each of the sets **A, B, C** and **D**, as shown in **Fig.11**.

By feeding the coils **3** of the electron-trap with a desired voltage a magnetic field is generated in coils **3**, between the four sets **A, B, C** and **D**, which form a flow of electrons. This flow of electrons augments the electron flow which is circulating in the closed-loop link-coil **5**, thus implementing free electron capture from space. The electromagnetic field of the coil **3A** runs north to south, the electromagnetic field of the coil **3B** runs north to south, the electromagnetic field of the coil **3C** flows from south to north, and the electromagnetic field of the coil **3D** flows from south to north, as shown in **Fig.11**. It should be noted that the sets **A, B, C** and **D** can be formed by any combination of coil, magnet and electromagnet.

The south to north electromagnetic field induces current flow in the coil **3A**. The north to south electromagnetic field induces current flow in the coil **3B**. The north to south electromagnetic field induces current flow in the coil **3C** and The north to south electromagnetic field induces current flow in the coil **3D**. The induced current flow can have any power and it can be single-phase, two-phase or three-phase current.

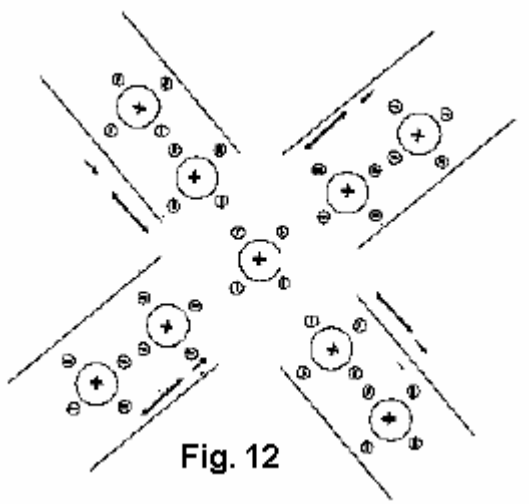

Fig. 12

Fig.12 shows the electrons being attracted and repelled by the induction coils **3** and **4**. Being repelled and attracted by electromagnetic induction, the electric current flows without resistance.

The electron-trap produces electromagnetic waves which can be used for various purposes, including signal transmission at any frequency and for any purpose. The capture is caused by these electromagnetic waves. The same physical effect can be achieved by the combination of the capture devices of other technologies, including electromechanical, electric, electronic, electromagnetic, or through the combination of a magnet or any other magnetised materials.

The space free electron-trap of the present invention is a renewable source of electrical power production and a new way of generating energy through the capture effect, generating flows of electrons, generating ordered movement of electrons - electric current - as shown in **Figures 9, 11,** and **12**. Electrons can move without any voltage difference in the continuous loop **5**. Alternatively, the loop may be biased with any chosen voltage.

The relevant Barbosa and Leal patents in Portuguese can be downloaded here:

http://www.free-energy-info.tuks.nl/Barbosa1.pdf

http://www.free-energy-info.tuks.nl/Barbosa2.pdf

http://www.free-energy-info.tuks.nl/Barbosa3.pdf

Scientific Papers

The following links connect to various scientific papers and documents of interest. As web-based resources are very prone to change and disappear, if you download any of these to read, I suggest that you store them on your local drive in case they become unavailable at a later date. If, for any reason, the www.free-energy-info.co.uk web site is not available, then you can try www.free-energy-info.com or www.free-energy-devices.com which are mirror sites.

http://www.free-energy-info.tuks.nl/P1.pdf 4 Mb Pulsed DC electrolysis

http://www.free-energy-info.tuks.nl/P2.pdf 360 Kb Water arc explosions

http://www.free-energy-info.tuks.nl/P3.pdf 388 Kb Plasma electrolysis

http://www.free-energy-info.tuks.nl/P4.pdf 321 Kb Cold water fog explosions

http://www.free-energy-info.tuks.nl/P5.pdf 151 Kb Engine operation with hydrogen added to the fuel

http://www.free-energy-info.tuks.nl/P6.pdf 63 Kb Bubbles and steam electricity

http://www.free-energy-info.tuks.nl/P7.pdf 600 Kb Stan Meyer's Water Fuel Cell

http://www.free-energy-info.tuks.nl/P8.pdf 3.5 Mb Stan Meyer's Water Fuel Cell

http://www.free-energy-info.tuks.nl/P9.pdf 303 Kb Water as Fuel by Stan Meyer

http://www.free-energy-info.tuks.nl/P10.pdf 68 Kb Solar Hydrogen Production

http://www.free-energy-info.tuks.nl/P11.pdf 328 Kb Passive Cooling

http://www.free-energy-info.tuks.nl/P13.pdf 347 Kb A Solar Ice-maker

http://www.free-energy-info.tuks.nl/P14.pdf 711 Kb Smart-Skin Shielding Technology

http://www.free-energy-info.tuks.nl/P15.pdf 215 Kb Physics for Engineers

http://www.free-energy-info.tuks.nl/P16.pdf 2.5 Mb Fuel Cell Handbook

http://www.free-energy-info.tuks.nl/P17.pdf 62 Kb Prof. Kanarev's Low-current Electrolysis

http://www.free-energy-info.tuks.nl/P18.pdf 8 Mb Principles of Ultra Relativity by Shinichi Seike

http://www.free-energy-info.tuks.nl/P21.pdf 754 Kb The Theory of Anti-gravity

http://www.free-energy-info.tuks.nl/P22.pdf 13.3 Mb Physics Without Einstein by Dr Harold Aspden

http://www.free-energy-info.tuks.nl/P23.pdf 6.9 Mb Modern Aether Science by Dr Harold Aspden

http://www.free-energy-info.tuks.nl/P24.pdf 10 Mb Unified Physics by Dr Harold Aspden

http://www.free-energy-info.tuks.nl/P25.pdf 1.5 Mb Permanent Magnet Motor Design

http://www.free-energy-info.tuks.nl/P26.pdf 402 Kb The Sea of Energy by Thomas Henry Moray

http://www.free-energy-info.tuks.nl/P31.pdf 14.5 Mb Tesla's Science of Energy by Dr Thomas Valone

http://www.free-energy-info.tuks.nl/P32.pdf 605 Kb High Voltage, High Frequency Alternating Currents by Nikola Tesla

http://www.free-energy-info.tuks.nl/P33.pdf 632 Kb "Prodigal Genius" biography of Nikola Tesla

http://www.free-energy-info.tuks.nl/P34.pdf 488 Kb Damped Waves by Nikola Tesla

http://www.free-energy-info.tuks.nl/P41.pdf 3.2 Mb Electrogravitics Systems by Dr Thomas Valone

http://www.free-energy-info.tuks.nl/P42.pdf 2.5 Mb Zero-Point Energy Extraction by Dr Thomas Valone

http://www.free-energy-info.tuks.nl/P63.pdf 181 Kb Scalar Waves by Konstantin Meyl

http://www.free-energy-info.tuks.nl/P65.pdf 592 Kb EsotericScience.com Presentation

http://www.free-energy-info.tuks.nl/P66.pdf 450 Kb The Genesis Project

http://www.free-energy-info.tuks.nl/Lodge.pdf 27 Mb. Modern Views of Electricity by Sir Oliver Lodge

http://www.free-energy-info.tuks.nl/Lodge2.pdf 9 Mb. The Ether of Space by Sir Oliver Lodge

http://www.free-energy-info.tuks.nl/Lodge3.pdf 22 Mb. The Nature and Properties of Negative Electricity by Sir Oliver Lodge

http://www.free-energy-info.tuks.nl/TeslaBook.pdf 36 Mb. The Inventions, Researches and Writings of Nikola Tesla by Thomas Commerford Martin

http://www.free-energy-info.tuks.nl/DonKelly.pdf 13 Mb. The 'Manual of Free Energy Devices and Systems' by Donald A. Kelly

http://www.free-energy-info.tuks.nl/Blitz.pdf 30 Mb. Ultrasonics by Jack Blitz

http://www.free-energy-info.tuks.nl/Magnetos.pdf 9.5 Mb. Magnetos Simply Explained by F. H. Hutton

http://www.free-energy-info.tuks.nl/TeslaPatents/TeslaPatents.pdf 100 Mb. All of Tesla's published patents

http://www.free-energy-info.tuks.nl/Magnetic_Motor.pdf 511 Kb Magnetic Motors by Lawrence Tseung

http://www.free-energy-info.tuks.nl/Maxwell.pdf 2.2 Mb The Electromagnetic Field by James Clerk Maxwell

http://www.free-energy-info.tuks.nl/Davson.pdf 46.7 Mb Davson's book on Karl Schappeller's work

http://www.free-energy-info.tuks.nl/Newman.pdf 97 Mb The Energy Machine of Joseph Newman

http://www.free-energy-info.tuks.nl/Combine.pdf 2.1 Mb Radiant Energy and Over-Unity by Dan Combine

http://www.free-energy-info.tuks.nl/Rodin.pdf 3 Mb The Rodin Solution Project by Marko Rodin

http://www.free-energy-info.tuks.nl/SEG.pdf 594 Kb Magnetic Gravity Research by Roschin and Godin

http://www.free-energy-info.tuks.nl/Stan_Meyer_Full_Data.pdf 3.8 Mb Technical Brief by Stan Meyer

http://www.free-energy-info.tuks.nl/LTseung.pdf 3.2 Mb Over-unity Devices by Lawrence Tseung

http://www.free-energy-info.tuks.nl/Smith.pdf 2.0 Mb. Resonant Energy Methods by Donald Lee Smith

http://www.free-energy-info.tuks.nl/Cottrell.pdf 2.8 Mb. How Gravity Works by Maurice Cottrell

http://www.free-energy-info.tuks.nl/Davidson.pdf 4.5 Mb. Shape Power by Dan Davidson

Videos

http://www.free-energy-info.tuks.nl/Meyer.wmv 4.6 Mb
http://www.free-energy-info.tuks.nl/Newman.avi 53 Mb
http://www.free-energy-info.tuks.nl/pyramid.avi 25 Mb
http://www.free-energy-info.tuks.nl/stage1.wmv 1.9 Mb
http://www.free-energy-info.tuks.nl/stage2.wmv 1.9 Mb
http://www.free-energy-info.tuks.nl/stage3.wmv 3.7 Mb
http://www.free-energy-info.tuks.nl/WFCrep2.wmv 1 Mb
http://www.free-energy-info.tuks.nl/stan.wmv 4.5 Mb
http://www.free-energy-info.tuks.nl/WFCrep.wmv 5.3 Mb
http://www.free-energy-info.tuks.nl/Bills.avi 17 Mb

http://www.youtube.com/watch?v=-6MDHF39XmU&NR